RF Test Report

Applicant	:	Netgear Incorporated
Product Type	:	Mobile Router
Trade Name	:	NETGEAR
Model Number	:	MR1100-330
Test Specification	:	FCC 47 CFR PART 90R ANSI/TIA-603-D 2010
Receive Date	:	Jan. 11, 2018
Test Period	:	Jan. 24 ~ 25, 2018
Issue Date	:	Mar. 06, 2018

Issue by

A Test Lab Techno Corp.
101-104, 1F, A building, Safflower ridge industrial area,
Taoyuan street, Nanshan district, Shenzhen
Tel：+86-755-23987770 / Fax：+86-755-26637771

American Association for Laboratory Accreditation number: 3464.02

Note: *This report shall not be reproduced except in full, without the written approval of A Test Lab Techno Corp. This document may be altered or revised by A Test Lab Techno Corp. personnel only, and shall be noted in the revision section of the document. The client should not use it to claim product endorsement by TAF, or any government agencies. The test results in the report only apply to the tested sample.*

Revision History

Rev.	Issue Date	Revisions	Revised By
00	Feb. 07, 2018	Initial Issue	Nina Lin
01	Mar. 06, 2018	Revised report information	Nina Lin

Verification of Compliance

Issued Date: Mar. 06, 2018

Applicant	:	Netgear Incorporated
Product Type	:	Mobile Router
Trade Name	:	NETGEAR
Model Number	:	MR1100-330
FCC ID	:	PY317200378
EUT Rated Voltage	:	DC 5V, 2A
Test Voltage	:	120 Vac / 60 Hz, 3.85Vdc
Applicable Standard	:	FCC 47 CFR PART 90R ANSI/TIA-603-D 2010
Test Result	:	Complied
Performing Lab.	:	A Test Lab Techno Corp. 101-104, 1F, A building, Safflower ridge industrial area, Taoyuan street, Nanshan district, Shenzhen Tel：+86-755-23987770 / Fax：+86-755-26637771 American Association for Laboratory Accreditation number: 3464.02

A Test Lab Techno Corp. tested the above equipment in accordance with the requirements set forth in the above standards. All indications of Pass/Fail in this report are opinions expressed by A Test Lab Techno Corp. based on interpretations and/or observations of test results. Measurement Uncertainties were not taken into account and are published for informational purposes only. The test results show that the equipment tested is capable of demonstrating compliance with the requirements as documented in this report.

Approved By	:		Reviewed By	:	Mick. zhang
(Manager)		(Hai Wang)	(Testing Engineer)		(Mick Zhang)

TABLE OF CONTENTS

1 General Information 5
1.1. EUT Description 5
1.2. Mode of Operation 7
1.3. EUT Exercise Software 7
1.4. Configuration of Test System Details 8
1.5. Test Instruments 9
1.6. Test Site Environment 10
1.7. Summary of Test Result 10
2 Measurement Procedure 11
2.1. Conducted Output Average Power Test 11
2.2. Effective Radiated Power / Equivalent Isotropic Radiated Power Test 12
2.3. Frequency Stability Test 15
2.4. Emission Bandwidth & Occupied Bandwidth Test 16
2.5. Peak to Average Ratio Test 17
2.6. Band Edge Test 18
2.7. Conducted Spurious Emission Test 20
2.8. Radiated Emission Test 21
3 Test Results 23
Conducted Output Average Power 23
Effective Radiated Power / Equivalent Isotropic Radiated Power 25
Radiated Emission 26
Appendix : Frequency Stability/ Emission Bandwidth & Occupied Bandwidth/ Peak to Average Ratio/ Band Edge/ Conducted Spurious Emission 38

1 General Information

1.1. EUT Description

Applicant	Netgear Incorporated 350 East Plumeria Drive,San Jose, California, United States 95134		
Manufacturer	Netgear Inc. Suite 168 – 10760 Shellbridge Way, Richmond, BC Canada V6X 3H1		
Product Type	Mobile Router		
Trade Name	NETGEAR		
Model Number	MR1100-330		
FCC ID	PY317200378		
IMEI No.	015161000		
Class II Permissive Change	Add LTE Band 14 function by software control. The model name is also changed from MR1100-320 to MR1100-330.		
Operate Band	Frequency Range (MHz)	Modulation	Channel Bandwidth
LTE Band 2	UL: 1850 ~ 1910	QPSK, 16QAM	1.4M, 3M, 5MHz, 10MHz, 15MHz, 20MHz
	DL: 1930 ~ 1990	QPSK, 16QAM	
LTE Band 4	UL: 1710 ~ 1755	QPSK, 16QAM	1.4M, 3M, 5MHz, 10MHz, 15MHz, 20MHz
	DL: 2110 ~ 2155	QPSK, 16QAM	
LTE Band 5	UL: 824 ~ 849	QPSK, 16QAM	1.4M, 3M, 5MHz, 10MHz
	DL: 869 ~ 894	QPSK, 16QAM	
LTE Band 7	UL: 2500 ~ 2570	QPSK, 16QAM	5MHz, 10MHz, 15MHz, 20MHz
	DL: 2620 ~ 2690	QPSK, 16QAM	
LTE Band 12	UL: 699 ~ 716	QPSK, 16QAM	1.4M, 3M, 5MHz, 10MHz
	DL: 729 ~ 746	QPSK, 16QAM	
LTE Band 14	UL: 788 ~ 798	QPSK, 16QAM	5MHz, 10MHz
	DL: 758 ~ 768	QPSK, 16QAM	
LTE Band 30	UL: 2305 ~ 2315	QPSK, 16QAM	5MHz, 10MHz
	DL: 2350 ~ 2360	QPSK, 16QAM	
LTE Band 66	UL: 1710 ~ 1755	QPSK, 16QAM	1.4M, 3M, 5MHz, 10MHz, 15MHz, 20MHz
Type of Antenna	PIFA Antenna		
Antenna Gain	LTE Band 14	-1.29 dBi	
Operate Temp. Range	0 ~ 50 ℃		

Band	Channel Bandwidth	Modulation	Max. RF Output Power	E.R.P. /E.I.R.P.
			(W)	(W)
LTE Band14	5MHz	QPSK	0.195	0.182
LTE Band14	5MHz	16QAM	0.160	0.124
LTE Band14	10MHz	QPSK	0.196	0.191
LTE Band14	10MHz	16QAM	0.160	0.125

Band	Channel Bandwidth	Modulation	Emission Designator Occupied Bandwidth (MHz)	
LTE Band14	5MHz	QPSK	4.4782	4M48G7D
LTE Band14	5MHz	16QAM	4.4794	4M48W7D
LTE Band14	10MHz	QPSK	8.9495	8M95G7D
LTE Band14	10MHz	16QAM	8.9241	8M92W7D

1.2. Mode of Operation

Three channels had been tested for each channel bandwidth.

LTE Band 14				
Channel Bandwidth	5MHz		10MHz	
	Channel	Frequency (MHz)	Channel	Frequency (MHz)
Low CH	23305	790.5	---	---
Middle CH	23330	793	23330	793
High CH	23255	795.5	---	---

During all testing, EUT is in link mode with base station emulator at maximum power level. The spurious emission measurements were carried out in semi-anechoic chamber with 3-meter test range, and EUT is rotated on three test planes to find out the worst emission.

Frequency range investigated for radiated emission: 30MHz to 26.5 GHz.

Band	Channel Bandwidth	Test Modes	
LTE Band 14	5 MHz	☐ LTE(RB Size 1, RB Offset 0) Link ☐ LTE(RB Size 1, RB Offset 12) Link ☑ LTE(RB Size 1, RB Offset 24) Link ☐ LTE(RB Size 12, RB Offset 0) Link ☐ LTE(RB Size 12, RB Offset 6) Link ☐ LTE(RB Size 12, RB Offset 13) Link ☐ LTE(RB Size 25, RB Offset 0) Link	QPSK
	10 MHz	☐ LTE(RB Size 1, RB Offset 0) Link ☑ LTE(RB Size 1, RB Offset 24) Link ☐ LTE(RB Size 1, RB Offset 49) Link ☐ LTE(RB Size 25, RB Offset 0) Link ☐ LTE(RB Size 25, RB Offset 12) Link ☐ LTE(RB Size 25, RB Offset 25) Link ☐ LTE(RB Size 50, RB Offset 0) Link	QPSK

1.3. EUT Exercise Software

1	Setup the EUT shown on “Configuration of Test System Details”.
2	Turn on the power of all equipment.
3	EUT run test program test.

1.4. Configuration of Test System Details

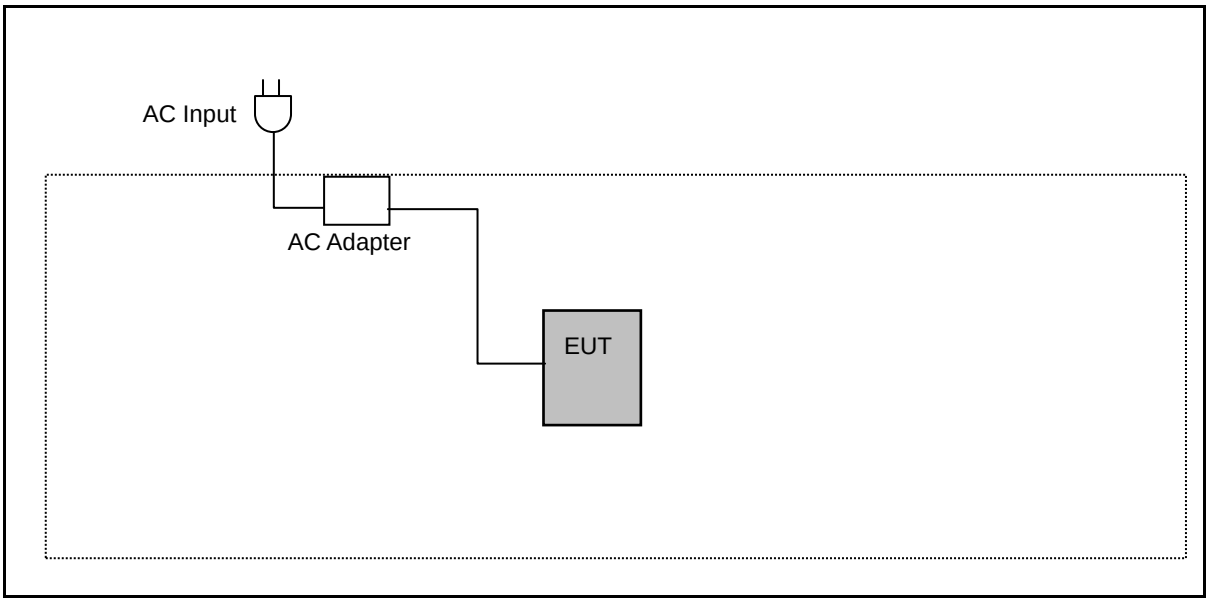

1.5. Test Instruments

For Conducted

Equipment	Manufacturer	Model Number	Serial Number	Cal. Date	Cal. Cycle
Radio Communication Analyzer	Anritsu	MT8820C	6201144493	09/19/2017	1 year
Spectrum Analyzer (10Hz~26.5GHz)	Agilent	N9020A	MY53420615	09/19/2017	1 year
Programmable temp &humi chamber	ETAI	9712A	647	09/19/2017	1 year

For Spurious Radiation

Equipment	Manufacturer	Model Number	Serial Number	Cal. Date	Cal. Cycle
Preamplifier (10kHz~3GHz)	EMCI	EMC001330	980300	09/19/2017	1 year
Preamplifier (0.1GHz~26.5GHz)	EMCI	EMC012645SE	980318	09/19/2017	1 year
Preamplifier (26.5GHz~40GHz)	EMCI	EMC2654045	980028	08/29/2017	1 year
Bilog Antenna (30MHz~1.4GHz)	Schwarzbeck	VULB 9168	672	11/15/2017	1 year
Horn Antenna (1GHz~18GHz)	ETS	3117	00204949	11/15/2017	1 year
Horn Antenna (18GHz~26.5GHz)	ETS	3160-09	00202549	11/15/2017	1 year
Horn Antenna (18GHz~40GHz)	ETS	3116	00086467	09/19/2017	1 year
Receiver (3Hz~26.5GHz)	Keysight	N9038A	MY51210179	09/19/2017	1 year
Spectrum Analyzer (3Hz~43GHz)	Keysight	N9030A	MY55410268	09/19/2017	1 year
Cable (30MHz~1GHz)	EMCI	N/A	1066LFC	09/19/2017	1 year
Cable (1GHz~18GHz)	EMCI	N/A	160719	09/19/2017	1 year
Cable (1GHz~18GHz)	EMCI	N/A	160324	09/19/2017	1 year
Cable (1GHz~18GHz)	EMCI	N/A	160322	09/19/2017	1 year

Note: N.C.R. = No Calibration Request.

1.6. Test Site Environment

Items	Required (IEC 68-1)	Actual
Temperature (°C)	15-35	26
Humidity (%RH)	25-75	60
Barometric pressure (mbar)	860-1060	950

Test Setting Condition		
L.V.	Low Voltage	DC 3.27 Vdc
N.V.	Normal Voltage	DC 3.85 Vdc
H.V.	High Voltage	DC 4.43 Vdc
L.T.	Low Temperature	0 ℃
N.T.	Normal Temperature	+25 ℃
H.T.	High Temperature	+50 ℃

1.7. Summary of Test Result

FCC Rule	Description	Result
§2.1046	Conducted Output Average Power	Pass
§90.542	Equivalent Isotropic Radiated Power / Equivalent Radiated Power	Pass
§2.1055	Frequency Stability	Pass
§2.1049	Emission Bandwidth & Occupied Bandwidth	Pass
KDB 971168	Peak to average ratio	Pass
§2.1051 §90.543	Band Edge	Pass
§2.1051 §90.543	Conducted Spurious Emissions	Pass
§2.1053 §90.543	Radiated Spurious Emissions	Pass

2 Measurement Procedure

2.1. Conducted Output Average Power Test

- **Limit**

  N/A

- **Test Setup**

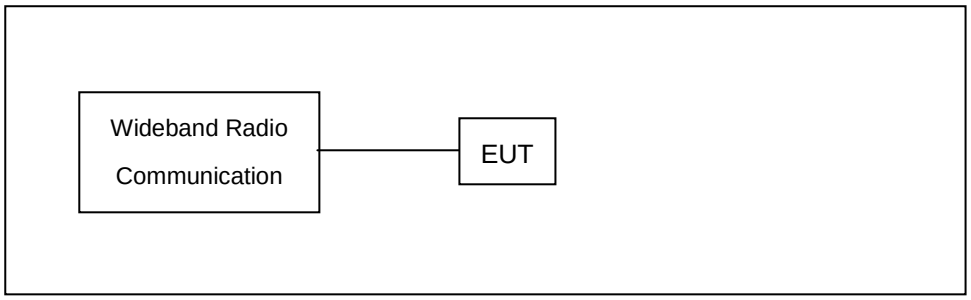

- **Test Procedure**

  a. The EUT was set up for the maximum power with simulator.

  b. Set the EUT to transmit under low, middle and high channel and record the power level shown on simulator.

- **Uncertainty**

  The measurement uncertainty is defined as for Conducted Power measurement is 1.2 dB.

2.2. Effective Radiated Power / Equivalent Isotropic Radiated Power Test

- **Limit**

For FCC Part 90.542(7): Portable stations in the 758-768 MHz band and the 788-798 MHz are limited to 3 watts ERP

- **Test Setup**

Below 1 GHz

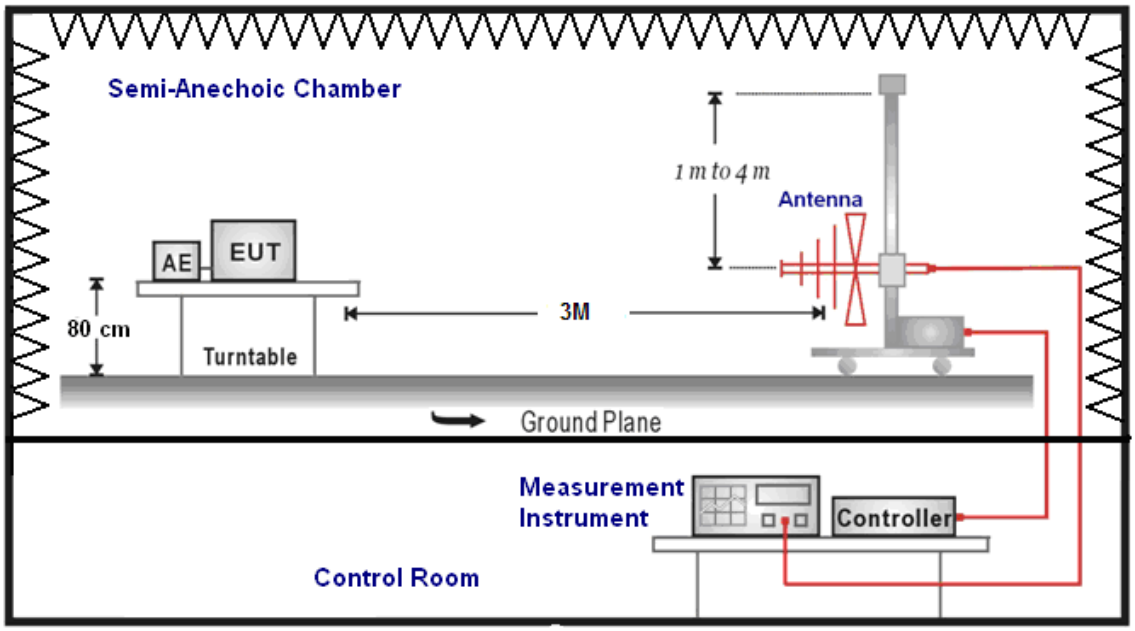

Above 1 GHz

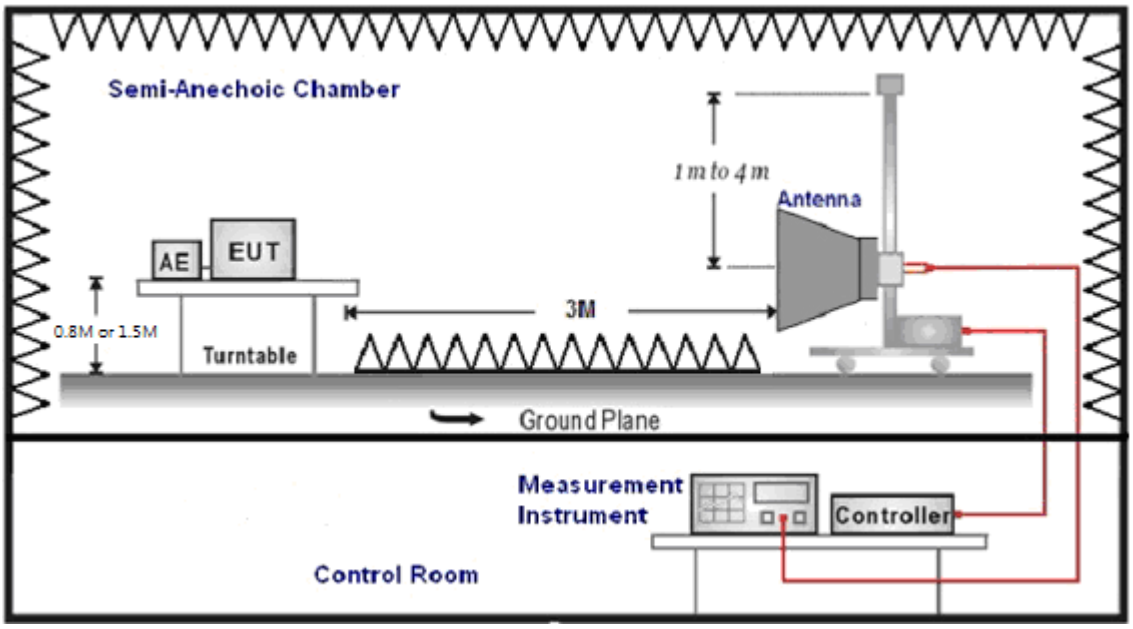

For Substituted Method Test Set-UP

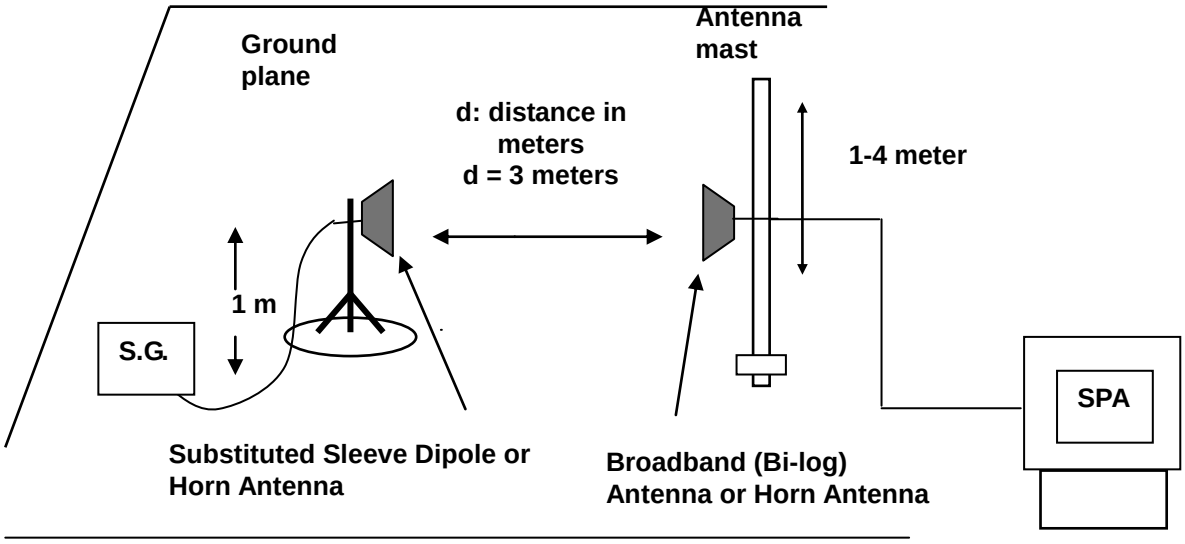

Test Procedure

a. The EUT was set up for the maximum power with wwan link data modulation. The power was measured with Spectrum Analyzer. All measurements were done at 3 channels (low, middle and high operational frequency range).

b. E.I.R.P power measurement. In the semi-anechoic chamber, EUT placed on the 0.8m height of Turn Table, rotated the table around 360 degrees to search the maximum radiation power and receiver antenna shall be rotated vertical and horizontal polarization and moved height from 1m to 4m to find the maximum polar radiated power. The “Read Value” is the spectrum reading the maximum power value.

c. The substitution antenna (Note:1 & 2) is substituted for EUT at the same position and signals generator export the CW signal to the substitution antenna via a TX cable. Rotated the Turn Table and moved receiving antenna to find the maximum radiation power. Adjust output power level of S.G to get a Value of spectrum reading equal to “Read Value” of step a. Record the power level of S.G.

d. E.I.R.P. = Output power level of S.G - TX cable loss + Antenna gain of substitution horn

e. E.R.P. = E.I.R.P- 2.15 dB

Note: 1. Below 1 GHz Substituted Method Test：Sleeve dipole antenna to Bi-Log Antenna

2. Above 1 GHz Substituted Method Test：Horn antenna to Horn Antenna

Uncertainty

The measurement uncertainty is defined as for Field Strength of Spurious Radiation measurement is ± 3.072 dB.

2.3. Frequency Stability Test

- **Limit**

According to the FCC rule shall be tested the frequency stability. The rule is defined that" The frequency stability shall be sufficient to ensure that the fundamental emissions stay within the authorized bands of operation. The test extreme voltage is according to the 2.1055(d)(1) Vary primary supply voltage from 85 to 115 percent of the nominal value for other than hand carried battery equipment and the extreme temperature rule is comply with the 2.1055(a)(1) -30℃ ~ 50℃.

- **Setup**

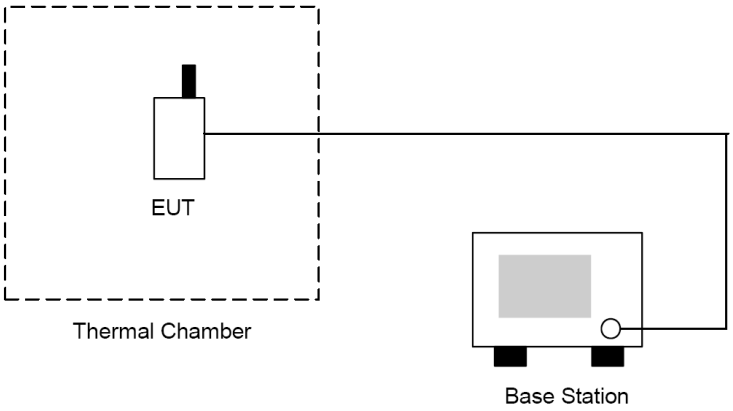

- **Test Procedure**

1. The EUT and test equipment were set up as shown on the following section.
2. With all power removed, the temperature was decreased to -30℃ and permitted to stabilize for three hours. Power was applied and the maximum change in frequency was note within one minute.
3. With power OFF, the temperature was raised in 10℃ steps. The sample was permitted to stabilize at each step for at least one-half hour. Power was applied and the maximum frequency change was noted within one minute.
4. The EUT was placed in a temperature chamber at 25±5 ℃ and connected as the following section.
5. The power supply voltage to the EUT was varied from BEP to 115% of the nominal value measured at the input to the EUT.
6. The temperature tests were performed for the worst case.
7. Test data was recorded.

- **Uncertainty**

The measurement uncertainty is defined as for Frequency Stability measurement is ± 10Hz.

2.4. Emission Bandwidth & Occupied Bandwidth Test

- **Limit**

The width of a frequency band such that, below the lower and above the upper frequency limits, the mean powers emitted are each equal to a specified percentage 0.5 %of the total mean power of a given emission.

The emission bandwidth is defined as the width of the signal between two points, located at the 2 sides of the carrier frequency, outside of which all emissions are attenuated at least 26 dB below the transmitter power.

- **Setup**

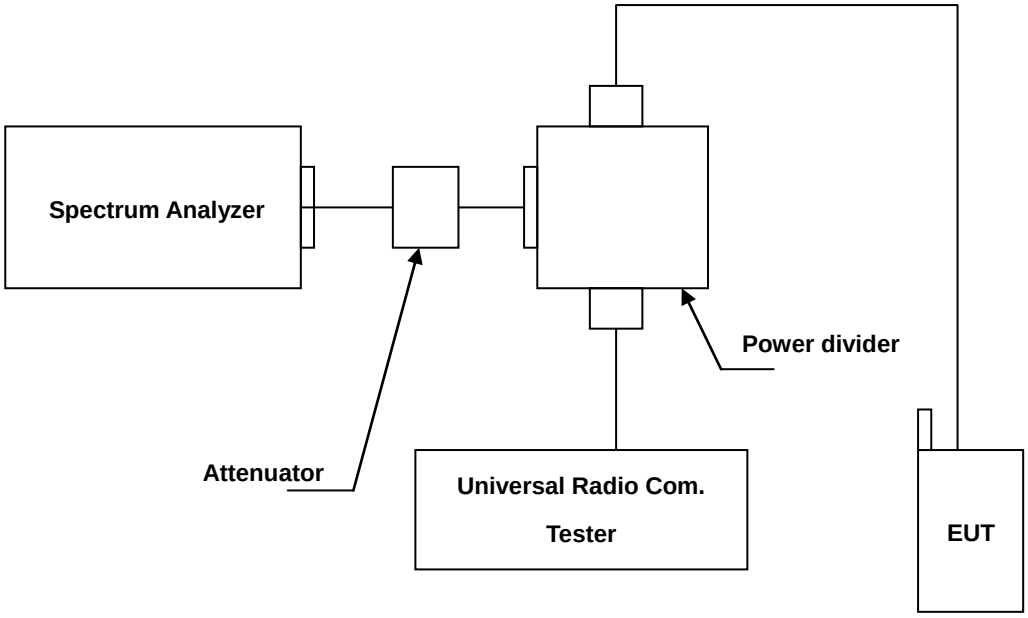

- **Test Procedure**

a. The EUT makes a phone call to the communication simulator. The power was measured with Spectrum Analyzer. All measurements were done at 3 channels. (low, middle and high operational frequency range.)

b. The conducted occupied bandwidth used the power splitter via EUT RF power connector between simulation base station and spectrum analyzer.

c. The communication simulator station system controlled a EUT to export maximum output power under transmission mode and specific channel frequency. Use OBW measurement function of Spectrum analyzer to measure 99 % occupied bandwidth.

- **Uncertainty**

The measurement uncertainty is defined as ± 10Hz

2.5. Peak to Average Ratio Test

- **Limit**

In measuring transmissions in this band using an average power technique, the peak to-average ratio (PAR) of the transmission may not exceed 13 dB.

- **Setup**

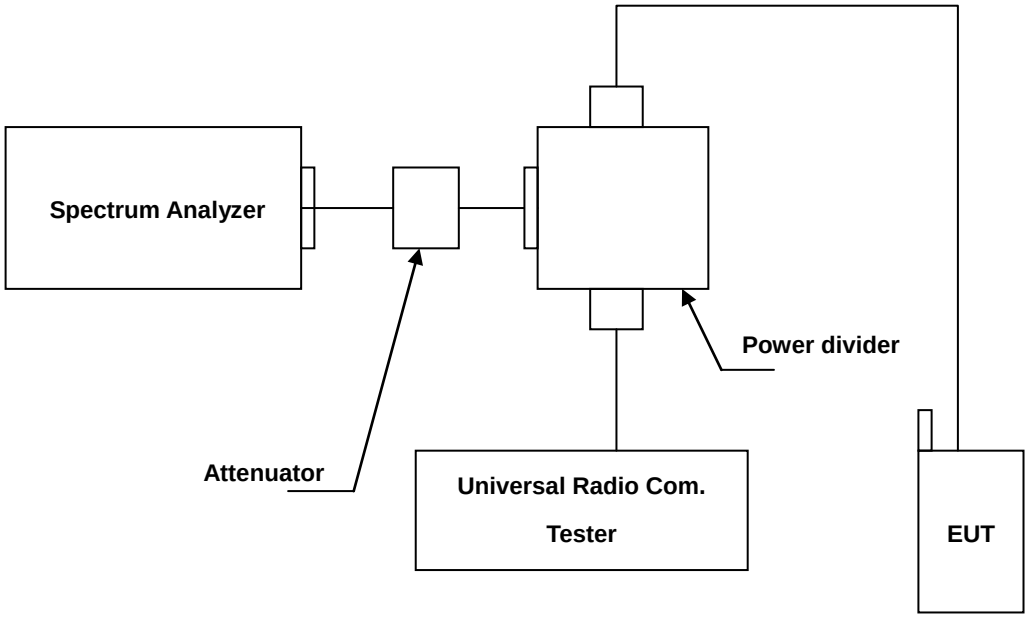

- **Test Procedure**

a. Set resolution/measurement bandwidth signal's occupied bandwidth;

b. Set the number of counts to a value that stabilizes the measured CCDF curve;

c. Record the maximum PAPR level associated with a probability of 0.1%.

- **Uncertainty**

The measurement uncertainty is defined as for Conducted Power measurement is 1.2 dB.

2.6. Band Edge Test

- **Limit**

The Band Edge Limit:

§90.543 (e)(2)

On all frequencies between 769-775 MHz and 799-805 MHz, by a factor not less than 65 + 10 log (P) dB in a 6.25 kHz band segment, for mobile and portable stations.

§90.543 (e)(3)

On all frequencies between 775-788 MHz, above 805 MHz, and below 758 MHz, by at least 43 + 10 log (P) dB.

LTE Band 14_BW=5M				
Frequency (MHz)	RBW=10kHz Measurement (dBm)	RBW=6.25kHz Measurement (dBm)	Limit -35dBm/6.25kHz	Result
769 ~ 775	-39.670	-41.711	-35	PASS
799 ~ 805	-51.865	-53.906	-35	PASS

LTE Band 14_BW=10M				
Frequency (MHz)	RBW=10kHz Measurement (dBm)	RBW=6.25kHz Measurement (dBm)	Limit -35dBm/6.25kHz	Result
769 ~ 775	-42.106	-44.147	-35	PASS
799 ~ 805	-41.867	-43.908	-35	PASS

Setup

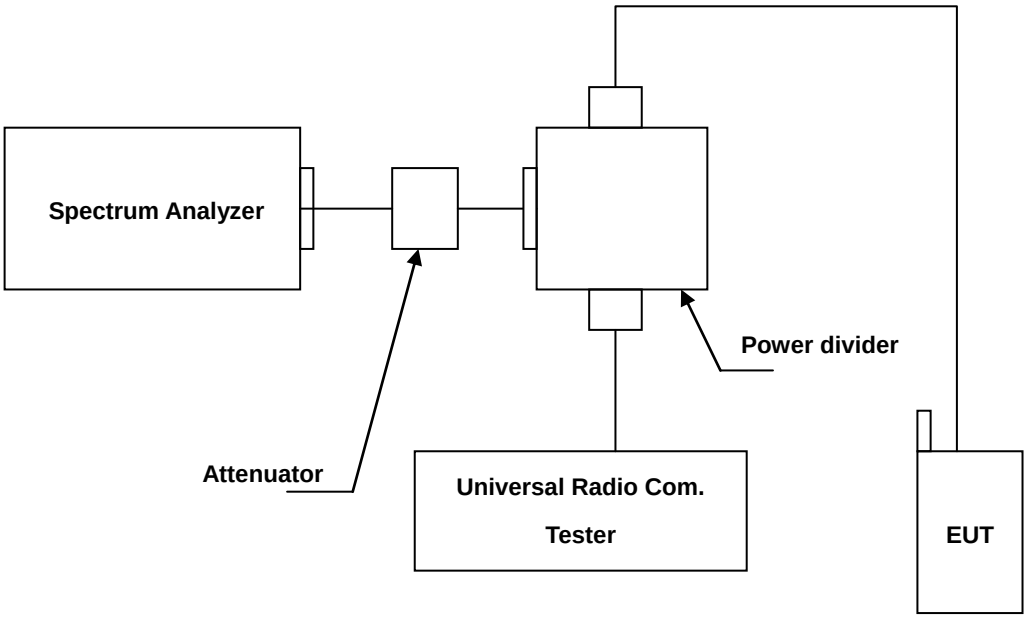

Test Procedure

a. The EUT was set up for the maximum peak power with WWAN link data modulation. The power was measured with Spectrum Analyzer. All measurements were done at 2 channels (low and high operational frequency range.)

b. The band edge measurement used the power splitter via EUT RF power connector between simulation base station and spectrum analyzer. This splitter loss and cable loss are the worst loss in the transmitted path track.

c. The center frequency of spectrum is the band edge frequency. RB of the resolution bandwidth of at least one percent of the emission bandwidth.

d. Record the max trace plot into the test report.

Uncertainty

The measurement uncertainty is defined as for Conducted Power measurement is 1.2 dB.

2.7. Conducted Spurious Emission Test

- **Limit**

The power of any emission outside a licensee's frequency block shall be attenuated below the transmitter power (P) by at least 43 +10 $\log_{10}$(P) dB. The limit of emission equal to -13dBm

- **Setup**

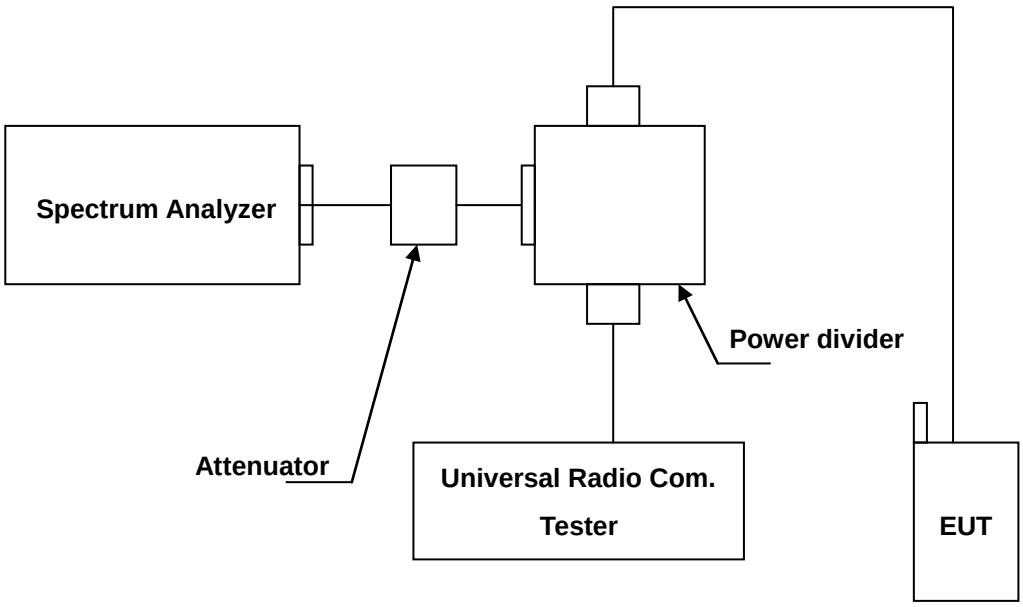

- **Test Procedure**

a. The EUT was set up for the maximum peak power with WWAN link data modulation. The power was measured with Spectrum Analyzer. All measurements were done at 3 channels (low, middle and high operational frequency range.).

b. The conducted spurious emission used the power splitter via EUT RF power connector between simulation base station and spectrum analyzer.

C. When the spectrum scanned from 10MHz to 10th harmonic. The spectrum set RB=1MHz, VB=3MHz.

- **Uncertainty**

The measurement uncertainty is evaluated as ± 2.24 dB.

2.8. Radiated Emission Test

- **Limit**

The power of any emission outside a licensee's frequency block shall be attenuated below the transmitter power (P) by at least 43 +10 $\log_{10}$(P) dB. The limit of emission equal to -13dBm

- **Setup**

Below 1GHz

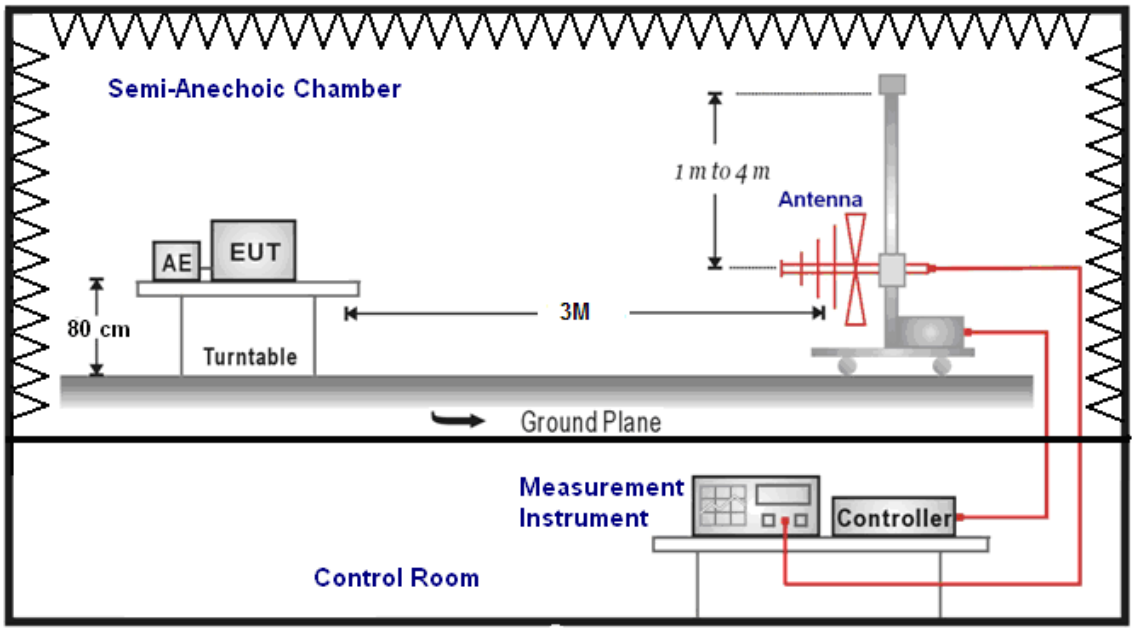

Above 1GHz

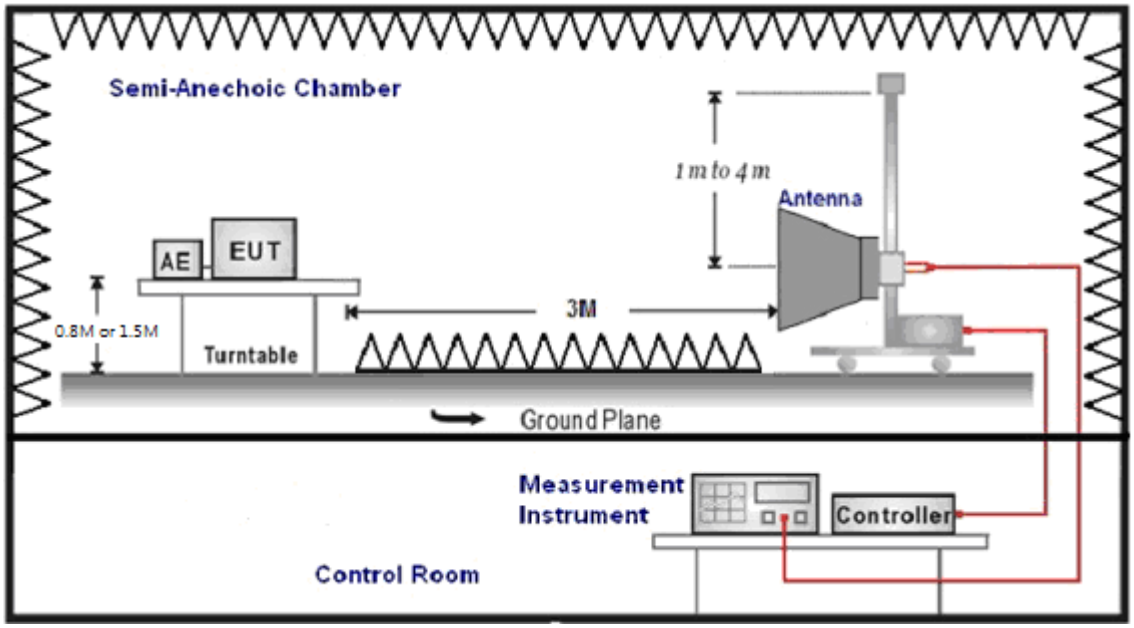

For Substituted Method Test Set-UP

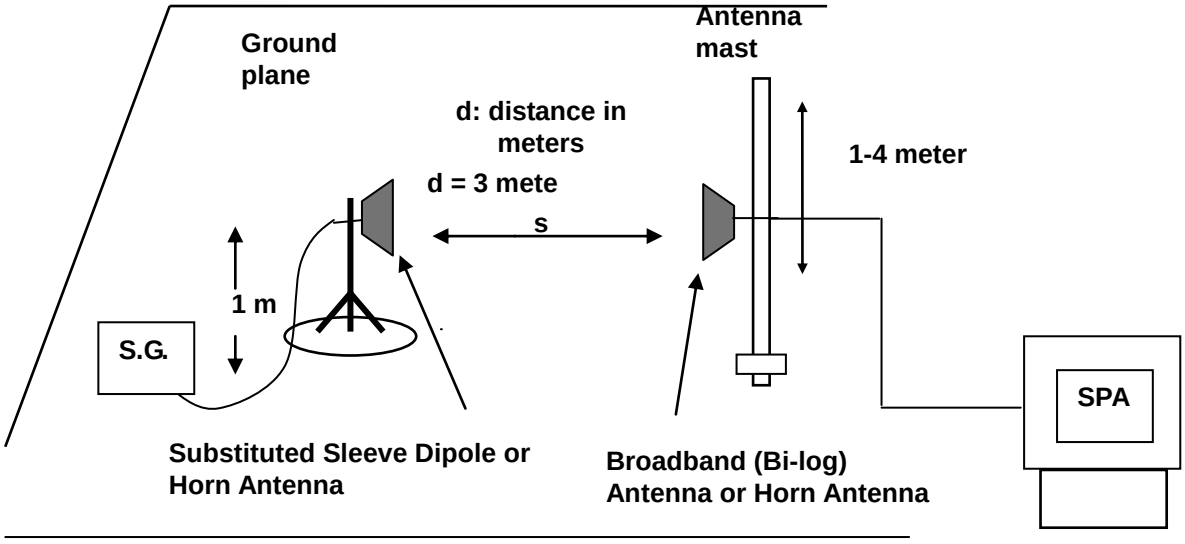

■ Test Procedure

a. The EUT was set up for the maximum power with wwan link data modulation. The power was measured with Spectrum Analyzer. All measurements were done at 3 channels (low, middle and high operational frequency range).

b. Radiation Emission measurement. In the semi-anechoic chamber, EUT placed on the 0.8m height of Turn Table, rotated the table around 360 degrees to search the maximum radiation power and receiver antenna shall be rotated vertical and horizontal polarization and moved height from 1m to 4m to find the maximum polar radiated power. The “Read Value” is the spectrum reading the maximum power value.

c. The substitution antenna (Note:1 & 2) is substituted for EUT at the same position and signals generator export the CW signal to the substitution antenna via a TX cable. Rotated the Turn Table and moved receiving antenna to find the maximum radiation power. Adjust output power level of S.G to get a Value of spectrum reading equal to “Read Value” of step a. Record the power level of S.G.

d. E.I.R.P. = Output power level of S.G - TX cable loss + Antenna gain of substitution horn

e. E.R.P. = E.I.R.P- 2.15 dB

Note: 1. Below 1 GHz Substituted Method Test：Sleeve dipole antenna to Bi-Log Antenna

2. Above 1 GHz Substituted Method Test：Horn antenna to Horn Antenn

■ Uncertainty

The measurement uncertainty is defined as for Field Strength of Spurious Radiation measurement is ± 3.072 dB.

3 Test Results

Conducted Output Average Power

Band	Channel Bandwidth	Modulation	Channel	Frequency (MHz)	RB Configuration		Average Power	
					Size	Offset	(dBm)	(W)
LTE Band14	5MHz	QPSK	23305	790.5	1	0	22.81	0.191
					1	12	22.88	0.194
					1	24	**22.89**	**0.195**
					12	0	21.93	0.156
					12	6	21.96	0.157
					12	13	21.92	0.156
					25	0	21.93	0.156
			23330	793.0	1	0	22.84	0.192
					1	12	22.83	0.192
					1	24	22.86	0.193
					12	0	21.97	0.157
					12	6	21.97	0.157
					12	13	21.96	0.157
					25	0	21.91	0.155
			23355	795.5	1	0	22.86	0.193
					1	12	22.87	0.194
					1	24	22.87	0.194
					12	0	21.92	0.156
					12	6	22.00	0.158
					12	13	21.94	0.156
					25	0	21.94	0.156
		16QAM	23305	790.5	1	0	22.05	0.160
					1	12	22.04	0.160
					1	24	22.00	0.158
					12	0	20.81	0.121
					12	6	20.87	0.122
					12	13	20.84	0.121
					25	0	20.84	0.121
			23330	793.0	1	0	22.03	0.160
					1	12	21.98	0.158
					1	24	22.00	0.158
					12	0	20.85	0.122
					12	6	20.84	0.121
					12	13	20.82	0.121
					25	0	20.79	0.120
			23355	795.5	1	0	21.98	0.158
					1	12	22.01	0.159
					1	24	22.03	0.160
					12	0	20.81	0.121
					12	6	20.87	0.122
					12	11	20.85	0.122
					25	0	20.84	0.121

Band	Channel Bandwidth	Modulation	Channel	Frequency (MHz)	RB Configuration		Average Power	
					Size	Offset	(dBm)	(W)
LTE Band14	10MHz	QPSK	23330	793	1	0	22.88	0.194
					1	24	22.92	0.196
					1	49	22.89	0.195
					25	0	21.9	0.155
					25	12	21.99	0.158
					25	25	21.94	0.156
					50	0	21.97	0.157
		16QAM	23330	793	1	0	22.02	0.159
					1	24	22.03	0.160
					1	49	22.01	0.159
					25	0	20.89	0.123
					25	12	20.87	0.122
					25	25	20.86	0.122
					50	0	20.84	0.121

Effective Radiated Power / Equivalent Isotropic Radiated Power

Band 14								
Channel Bandwidth	Modulation	Frequency (MHz)	Ant. Polar.	Read Level (dBm)	Correction Factor (dBm)	E.R.P.		Limit (W)
						(dBm)	(W)	
5M	QPSK	790.5	H	10.23	10.41	20.64	0.116	3
			V	12.17	10.39	22.56	0.180	3
		793.0	H	10.46	10.43	20.89	0.123	3
			V	11.88	10.43	22.31	0.170	3
		795.5	H	10.23	10.47	20.70	0.117	3
			V	12.15	10.46	**22.61**	**0.182**	3
	16QAM	793.0	H	8.56	10.41	18.97	0.079	3
			V	10.51	10.43	**20.94**	**0.124**	3
10M	QPSK	793.0	H	9.81	10.44	20.25	0.106	3
			V	12.37	10.43	**22.80**	**0.191**	3
	16QAM	793.0	H	8.42	10.43	18.85	0.077	3
			V	10.53	10.44	**20.97**	**0.125**	3

Radiated Emission

Standard:	Part 90R	Test Distance:	3m
Test item:	Harmonic	Power:	AC 120V/60Hz
Frequency:	790.5MHz	Temp.(℃)/Hum.(%RH):	26(℃)/60%RH
Mode:	4G_BAND 14_5M_QPSK_CH23305		
Ant.Polar.:	Horizontal		

No.	Frequency (MHz)	Reading (dBm)	Correct Factor (dB)	Result (dBm)	Limit (dBm)	Margin (dB)	Remark
1	2371.500	-54.85	10.01	-44.84	-13.00	-31.84	peak

Standard:	Part 90R	Test Distance:	3m
Test item:	Harmonic	Power:	AC 120V/60Hz
Frequency:	790.5MHz	Temp.(℃)/Hum.(%RH):	26(℃)/60%RH
Mode:	4G_BAND 14_5M_QPSK_CH23305		
Ant.Polar.:	Vertical		

No.	Frequency (MHz)	Reading (dBm)	Correct Factor (dB)	Result (dBm)	Limit (dBm)	Margin (dB)	Remark
1	2371.500	-59.87	10.01	-49.86	-13.00	-36.86	peak

Standard:	Part 90R	Test Distance:	3m
Test item:	Harmonic	Power:	AC 120V/60Hz
Frequency:	793MHz	Temp.(℃)/Hum.(%RH):	26(℃)/60%RH
Mode:	4G_BAND 14_5M_QPSK_CH23330		
Ant.Polar.:	Horizontal		

No.	Frequency (MHz)	Reading (dBm)	Correct Factor (dB)	Result (dBm)	Limit (dBm)	Margin (dB)	Remark
1	2379.000	-55.19	10.05	-45.14	-13.00	-32.14	peak

Standard:	Part 90R	Test Distance:	3m
Test item:	Harmonic	Power:	AC 120V/60Hz
Frequency:	793MHz	Temp.(℃)/Hum.(%RH):	26(℃)/60%RH
Mode:	4G_BAND 14_5M_QPSK_CH23330		
Ant.Polar.:	Vertical		

No.	Frequency (MHz)	Reading (dBm)	Correct Factor (dB)	Result (dBm)	Limit (dBm)	Margin (dB)	Remark
1	2379.000	-60.50	10.05	-50.45	-13.00	-37.45	peak

Standard:	Part 90R	Test Distance:	3m
Test item:	Harmonic	Power:	AC 120V/60Hz
Frequency:	795.5MHz	Temp.(℃)/Hum.(%RH):	26(℃)/60%RH
Mode:	4G_BAND 14_5M_QPSK_CH23355		
Ant.Polar.:	Horizontal		

No.	Frequency (MHz)	Reading (dBm)	Correct Factor (dB)	Result (dBm)	Limit (dBm)	Margin (dB)	Remark
1	2386.500	-56.56	10.08	-46.48	-13.00	-33.48	peak

Standard:	Part 90R	Test Distance:	3m
Test item:	Harmonic	Power:	AC 120V/60Hz
Frequency:	795.5MHz	Temp.(℃)/Hum.(%RH):	26(℃)/60%RH
Mode:	4G_BAND 14_5M_QPSK_CH23355		
Ant.Polar.:	Vertical		

No.	Frequency (MHz)	Reading (dBm)	Correct Factor (dB)	Result (dBm)	Limit (dBm)	Margin (dB)	Remark
1	2386.500	-62.21	10.08	-52.13	-13.00	-39.13	peak

Standard:	Part 90R	Test Distance:	3m
Test item:	Harmonic	Power:	AC 120V/60Hz
Frequency:	793MHz	Temp.(℃)/Hum.(%RH):	26(℃)/60%RH
Mode:	4G_BAND 14_5M-16QAM_CH23330		
Ant.Polar.:	Horizontal		

No.	Frequency (MHz)	Reading (dBm)	Correct Factor (dB)	Result (dBm)	Limit (dBm)	Margin (dB)	Remark
1	2379.000	-57.69	10.05	-47.64	-13.00	-34.64	peak

Standard:	Part 90R	Test Distance:	3m
Test item:	Harmonic	Power:	AC 120V/60Hz
Frequency:	793MHz	Temp.(℃)/Hum.(%RH):	26(℃)/60%RH
Mode:	4G_BAND 14_5M-16QAM_CH23330		
Ant.Polar.:	Vertical		

No.	Frequency (MHz)	Reading (dBm)	Correct Factor (dB)	Result (dBm)	Limit (dBm)	Margin (dB)	Remark
1	2379.000	-62.00	10.05	-51.95	-13.00	-38.95	peak

Standard:	Part 90R	Test Distance:	3m
Test item:	Harmonic	Power:	AC 120V/60Hz
Frequency:	793MHz	Temp.(℃)/Hum.(%RH):	26(℃)/60%RH
Mode:	4G_BAND 14_10M_QPSK_CH23330		
Ant.Polar.:	Horizontal		

No.	Frequency (MHz)	Reading (dBm)	Correct Factor (dB)	Result (dBm)	Limit (dBm)	Margin (dB)	Remark
1	2379.000	-58.11	10.05	-48.06	-13.00	-35.06	peak

Standard:	Part 90R	Test Distance:	3m
Test item:	Harmonic	Power:	AC 120V/60Hz
Frequency:	793MHz	Temp.(℃)/Hum.(%RH):	26(℃)/60%RH
Mode:	4G_BAND 14_10M_QPSK_CH23330		
Ant.Polar.:	Vertical		

No.	Frequency (MHz)	Reading (dBm)	Correct Factor (dB)	Result (dBm)	Limit (dBm)	Margin (dB)	Remark
1	2379.000	-62.33	10.05	-52.28	-13.00	-39.28	peak

Standard:	Part 90R	Test Distance:	3m
Test item:	Harmonic	Power:	AC 120V/60Hz
Frequency:	793MHz	Temp.(℃)/Hum.(%RH):	26(℃)/60%RH
Mode:	4G_BAND 14_10M-16QAM_CH23330		
Ant.Polar.:	Horizontal		

No.	Frequency (MHz)	Reading (dBm)	Correct Factor (dB)	Result (dBm)	Limit (dBm)	Margin (dB)	Remark
1	2379.000	-63.61	10.05	-53.56	-13.00	-40.56	peak

Standard:	Part 90R	Test Distance:	3m
Test item:	Harmonic	Power:	AC 120V/60Hz
Frequency:	793MHz	Temp.(℃)/Hum.(%RH):	26(℃)/60%RH
Mode:	4G_BAND 14_10M-16QAM_CH23330		
Ant.Polar.:	Vertical		

No.	Frequency (MHz)	Reading (dBm)	Correct Factor (dB)	Result (dBm)	Limit (dBm)	Margin (dB)	Remark
1	2379.000	-64.33	10.05	-54.28	-13.00	-41.28	peak

Standard:	Part 90R	Test Distance:	3m
Test item:	Harmonic	Power:	AC 120V/60Hz
Frequency:	790.5MHz	Temp.(℃)/Hum.(%RH):	26(℃)/60%RH
Mode:	4G_BAND 14_5M_QPSK_CH23305		
Ant.Polar.:	Horizontal		

No.	Frequency (MHz)	Reading (dBm)	Correct Factor (dB)	Result (dBm)	Limit (dBm)	Margin (dB)	Remark
1	1586.030	-57.69	6.97	-50.72	-40.00	-10.72	peak

Standard:	Part 90R	Test Distance:	3m
Test item:	Harmonic	Power:	AC 120V/60Hz
Frequency:	790.5MHz	Temp.(℃)/Hum.(%RH):	26(℃)/60%RH
Mode:	4G_BAND 14_5M_QPSK_CH23305		
Ant.Polar.:	Vertical		

No.	Frequency (MHz)	Reading (dBm)	Correct Factor (dB)	Result (dBm)	Limit (dBm)	Margin (dB)	Remark
1	1585.622	-65.67	6.98	-58.69	-40.00	-18.69	peak

Standard:	Part 90R	Test Distance:	3m
Test item:	Harmonic	Power:	AC 120V/60Hz
Frequency:	793MHz	Temp.(℃)/Hum.(%RH):	26(℃)/60%RH
Mode:	4G_BAND 14_5M_QPSK_CH23330		
Ant.Polar.:	Horizontal		

No.	Frequency (MHz)	Reading (dBm)	Correct Factor (dB)	Result (dBm)	Limit (dBm)	Margin (dB)	Remark
1	1586.132	-59.21	6.97	-52.24	-40.00	-12.24	peak

Standard:	Part 90R	Test Distance:	3m
Test item:	Harmonic	Power:	AC 120V/60Hz
Frequency:	793MHz	Temp.(℃)/Hum.(%RH):	26(℃)/60%RH
Mode:	4G_BAND 14_5M_QPSK_CH23330		
Ant.Polar.:	Vertical		

No.	Frequency (MHz)	Reading (dBm)	Correct Factor (dB)	Result (dBm)	Limit (dBm)	Margin (dB)	Remark
1	1589.804	-61.01	6.98	-54.03	-40.00	-14.03	peak

Standard:	Part 90R	Test Distance:	3m
Test item:	Harmonic	Power:	AC 120V/60Hz
Frequency:	795.5MHz	Temp.(℃)/Hum.(%RH):	26(℃)/60%RH
Mode:	4G_BAND 14_5M_QPSK_CH23355		
Ant.Polar.:	Horizontal		

No.	Frequency (MHz)	Reading (dBm)	Correct Factor (dB)	Result (dBm)	Limit (dBm)	Margin (dB)	Remark
1	1583.837	-61.11	6.96	-54.15	-40.00	-14.15	peak

Standard:	Part 90R	Test Distance:	3m
Test item:	Harmonic	Power:	AC 120V/60Hz
Frequency:	795.5MHz	Temp.(℃)/Hum.(%RH):	26(℃)/60%RH
Mode:	4G_BAND 14_5M_QPSK_CH23355		
Ant.Polar.:	Vertical		

No.	Frequency (MHz)	Reading (dBm)	Correct Factor (dB)	Result (dBm)	Limit (dBm)	Margin (dB)	Remark
1	1588.478	-64.72	6.98	-57.74	-40.00	-17.74	peak

Standard:	Part 90R	Test Distance:	3m
Test item:	Harmonic	Power:	AC 120V/60Hz
Frequency:	793MHz	Temp.(℃)/Hum.(%RH):	26(℃)/60%RH
Mode:	4G_BAND 14_5M-16QAM_CH23330		
Ant.Polar.:	Horizontal		

No.	Frequency (MHz)	Reading (dBm)	Correct Factor (dB)	Result (dBm)	Limit (dBm)	Margin (dB)	Remark
1	1583.837	-62.88	6.96	-55.92	-40.00	-15.92	peak

Standard:	Part 90R	Test Distance:	3m
Test item:	Harmonic	Power:	AC 120V/60Hz
Frequency:	793MHz	Temp.(℃)/Hum.(%RH):	26(℃)/60%RH
Mode:	4G_BAND 14_5M-16QAM_CH23330		
Ant.Polar.:	Vertical		

No.	Frequency (MHz)	Reading (dBm)	Correct Factor (dB)	Result (dBm)	Limit (dBm)	Margin (dB)	Remark
1	1598.474	-65.80	7.02	-58.78	-40.00	-18.78	peak

Standard:	Part 90R	Test Distance:	3m
Test item:	Harmonic	Power:	AC 120V/60Hz
Frequency:	793MHz	Temp.(℃)/Hum.(%RH):	26(℃)/60%RH
Mode:	4G_BAND 14_10M_QPSK_CH23330		
Ant.Polar.:	Horizontal		

No.	Frequency (MHz)	Reading (dBm)	Correct Factor (dB)	Result (dBm)	Limit (dBm)	Margin (dB)	Remark
1	1589.141	-59.94	6.98	-52.96	-40.00	-12.96	peak

Standard:	Part 90R	Test Distance:	3m
Test item:	Harmonic	Power:	AC 120V/60Hz
Frequency:	793MHz	Temp.(℃)/Hum.(%RH):	26(℃)/60%RH
Mode:	4G_BAND 14_10M_QPSK_CH23330		
Ant.Polar.:	Vertical		

No.	Frequency (MHz)	Reading (dBm)	Correct Factor (dB)	Result (dBm)	Limit (dBm)	Margin (dB)	Remark
1	1589.039	-64.57	6.99	-57.58	-40.00	-17.58	peak

Standard:	Part 90R	Test Distance:	3m
Test item:	Harmonic	Power:	AC 120V/60Hz
Frequency:	793MHz	Temp.(℃)/Hum.(%RH):	26(℃)/60%RH
Mode:	4G_BAND 14_10M-16QAM_CH23330		
Ant.Polar.:	Horizontal		

No.	Frequency (MHz)	Reading (dBm)	Correct Factor (dB)	Result (dBm)	Limit (dBm)	Margin (dB)	Remark
1	1585.163	-63.81	6.98	-56.83	-40.00	-16.83	peak

Standard:	Part 90R	Test Distance:	3m
Test item:	Harmonic	Power:	AC 120V/60Hz
Frequency:	793MHz	Temp.(℃)/Hum.(%RH):	26(℃)/60%RH
Mode:	4G_BAND 14_10M-16QAM_CH23330		
Ant.Polar.:	Vertical		

No.	Frequency (MHz)	Reading (dBm)	Correct Factor (dB)	Result (dBm)	Limit (dBm)	Margin (dB)	Remark
1	1586.336	-66.52	6.97	-59.55	-40.00	-19.55	peak

Appendix : Frequency Stability/ Emission Bandwidth & Occupied Bandwidth/ Peak to Average Ratio/ Band Edge/ Conducted Spurious Emission

The equipment passed the requirement of this clause, the detail results refer to
“Test Results_ Band14