FCC Part 96.47 TEST REPORT

FCC ID	:	**PY322100564**
Equipment	:	**Netgear 5G MHS Travel Router**
Brand Name	:	**Netgear**
Model Name	:	**MR6150**
Applicant	:	**Netgear Inc** **350 E. Plumeria Drive, San Jose, CA 95134, United States**
Manufacturer	:	**Netgear Inc** **350 E. Plumeria Drive, San Jose, CA 95134, United States**
Standard	:	**FCC Part 96.47**
RF Interface	:	**NR n48**

The product was received on May 23, 2022 and testing was performed from Jun. 07, 2022 to Jun. 07, 2022. We, Sporton International (USA) Inc., would like to declare that the tested sample has been evaluated in accordance with the test procedures and has been in compliance with the applicable technical standards.

The test results in this report apply exclusively to the tested model / sample. Without written approval of Sporton International (USA) Inc., the test report shall not be reproduced except in full.

Neil Kao

Approved by: Neil Kao

Sporton International (USA) Inc.

1175 Montague Expressway, Milpitas, CA 95035

Table of Contents

History of this test report **3**
Summary of Test Result **4**
1 General Description **5**
1.1 Product Feature of Equipment Under Test 5
1.2 Modification of EUT 5
1.3 Testing Laboratory 5
1.4 Applicable Standards 5
2 Test Configuration of Equipment Under Test **6**
2.1 Connection Diagram of Test System 6
3 End User Device additional requirement **7**
3.1 Test Requirement 7
3.2 Test Procedure 7
3.3 Test Result 8
4 List of Measuring Equipment **10**
Appendix A. Setup Photographs

History of this test report

Report No.	Version	Description	Issued Date
FG220511001	01	Initial issue of report	Aug. 23, 2022

Summary of Test Result

Report Clause	Ref Std. Clause	Test Items	Result (PASS/FAIL)	Remark
3	96.47	End User Device additional requirement	Pass	-

Conformity Assessment Condition:
The test results (PASS/FAIL) with all measurement uncertainty excluded are presented in accordance with the regulation limits or requirements declared by manufacturers. It's means measurement values may risk exceeding the limit of regulation standards, if measurement uncertainty is include in test results.
Comments and Explanations:
The product specifications of the EUT presented in the report are declared by the manufacturer who shall take full responsibility for the authenticity.

1 General Description

1.1 Product Feature of Equipment Under Test

WCDMA/LTE/5G NR, Wi-Fi 2.4GHz 802.11b/g/n/ac/ax, Wi-Fi 5GHz 802.11a/n/ac/ax, Wi-Fi 6GHz 802.11a/n/ac/ax, and GPS

Product Feature	
Antenna Type	WWAN: **<Ant. 1>**: Monopole Antenna **<Ant. 2>**: Monopole Antenna WLAN: **<Ant. 3>**: Monopole Antenna **<Ant. 4>**: Monopole Antenna GPS: PIFA Antenna

Remark: The EUT's information above was declared by manufacturer. Please refer to Comments and Explanations in report summary.

1.2 Modification of EUT

No modifications are made to the EUT during all test items.

1.3 Testing Laboratory

Test Site	Sporton International (USA) Inc.
Test Site Location	1175 Montague Expressway, Milpitas, CA 95035 TEL : 408 9043300
Test Site No.	**Sporton Site No.**
	TH01-CA
Test Engineer	David Hung
Temperature	24.1℃
Relative Humidity	47.9%

1.4 Applicable Standards

- FCC Part 96.47
- FCC KDB 940660 D01 Part 96 CBRS Eqpt v02
- WINNF-TS-0122-V1.0.2 CBRS CBSD Test Specification

Remark:

1. All test items were verified and recorded according to the standards and without any deviation during the test.
2. The A2LA code is not including all the FCC KDB listed without accreditation.

2 Test Configuration of Equipment Under Test

2.1 Connection Diagram of Test System

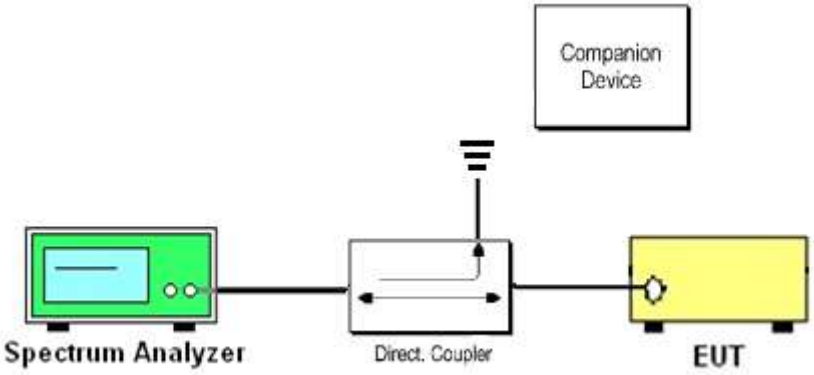

The companion device is certified NR CBSD (FCC ID: PIDAS2900)

3 End User Device additional requirement

3.1 Test Requirement

FCC Part 96.47

(a) End User Devices may operate only if they can positively receive and decode an authorization signal transmitted by a CBSD, including the frequencies and power limits for their operation.

(1) An End User Device must discontinue operations, change frequencies, or change its operational power level within 10 seconds of receiving instructions from its associated CBSD.

3.2 Test Procedure

Following procedure can be done by applying WINNF-TS-0122-V1.0.2 CBRS CBSD Test Specification, use the certified Airspan NR CBSD (FCC ID: PIDAS2900) as companion device to show compliance with Part 96.47 requirement for End User Device (EUD):

1. Setup with frequency 3570-3590MHz and power level 34dBm/MHz
2. Enable CBSD service from Airspan ACP management
3. Check EUD Tx Frequency and power
4. Disable CBSD service from Airspan ACP management
    a. Check EUD stops transmission within 10seconds.

5. Setup with frequency 3670-3690MHz and power level 24dBm/MHz
6. Enable CBSD service from Airspan ACP management
7. Check EUD Tx Frequency and power
8. Disable CBSD service from Airspan ACP management
    a. Check EUD stops transmission within 10seconds.

3.3 Test Result

[Step 1] Setup with frequency 3570-3590MHz and power level 34dBm/MHz
[Step 3] Check EUD Tx Frequency and power

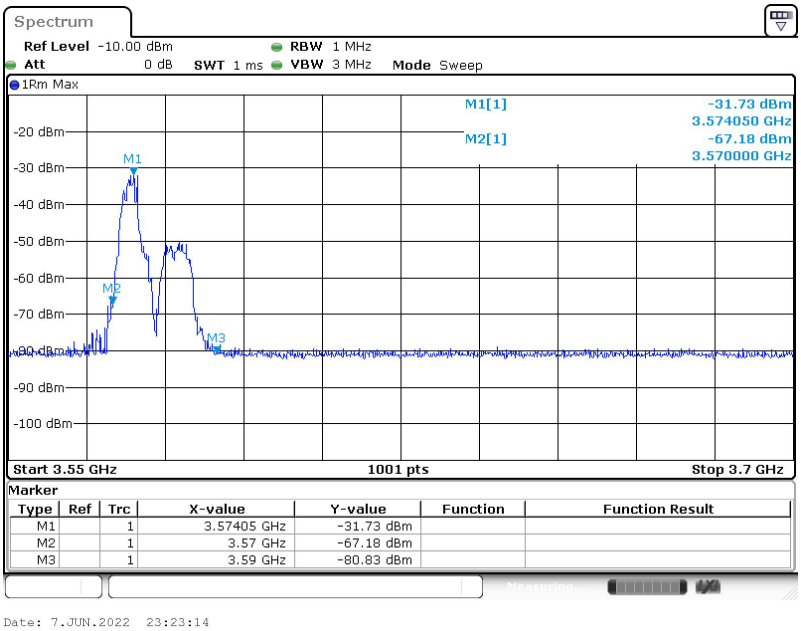

[Step 4.a.] EUD stops transmission within 10 seconds of receiving instructions from its associated CBSD.

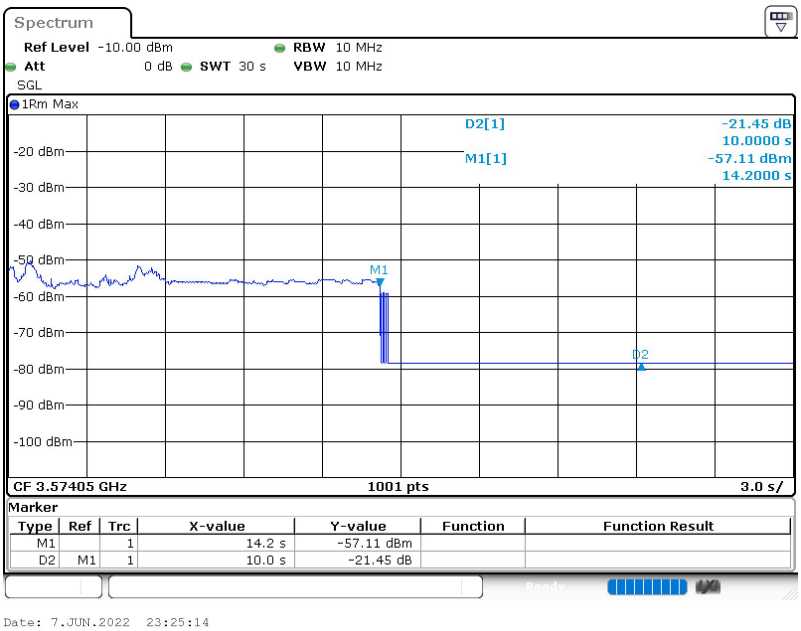

[Step 5] Setup with 3670-3690MHz & power level 24dBm/MHz

[Step 7] Check EUD Tx Frequency and power

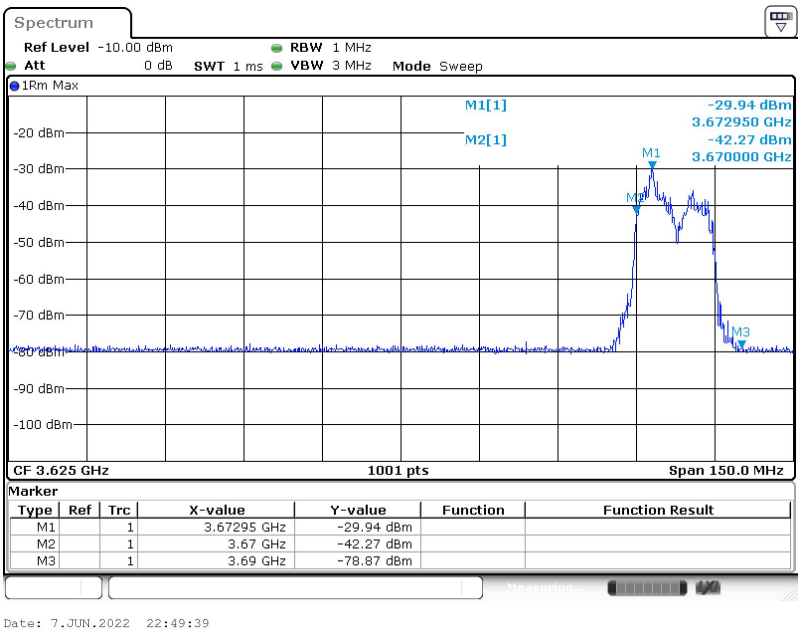

[Step 8.a.] After changing the frequency and power level,

The module (EUT) discontinues operations, change frequencies, or change its operational power level within 10 seconds of receiving instructions from its associated CBSD. Test result is PASS.

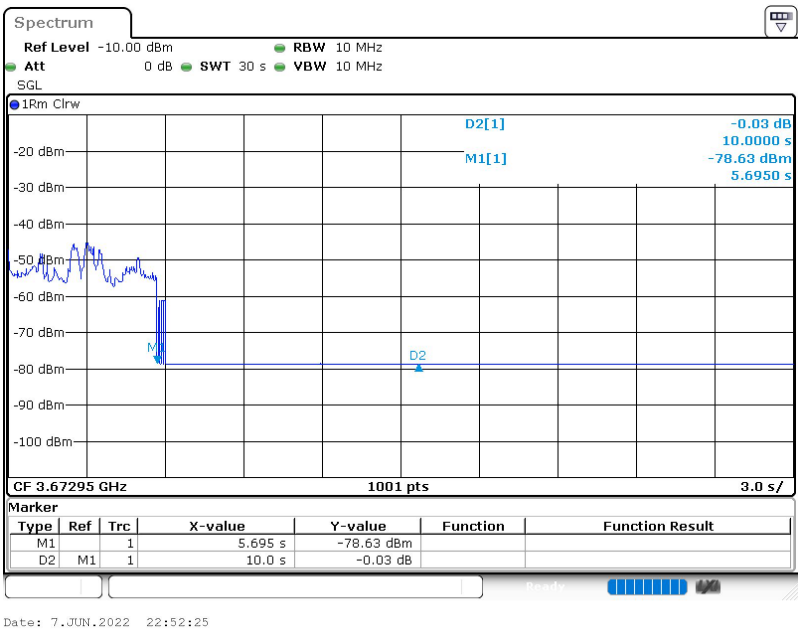

4 List of Measuring Equipment

Instrument	Brand Name	Model No.	Serial No.	Characteristics	Calibration Date	Test Date	Due Date	Remark
Spectrum Analyzer	R&S	FSV40	101545	10Hz~40GHz	May 31, 2021	Jun. 07, 2022	May 30, 2023	TH01-CA