A Test Lab Techno Corp.

Changan Lab：No. 140 -1, Changan Street, Bade City, Taoyuan County, Taiwan R.O.C.
Tel：886-3-271-0188 / Fax：886-3-271-0190
FCC Test Firm Information: 510205 IC Test Firm Information: 7381A-1

SAR EVALUATION REPORT

Test Report No.	:	1412FS13-01
Applicant	:	Netgear Inc.
Product Type	:	WWAN Mobile Hotspot Portable Device
Trade Name	:	Netgear
Model Number	:	AC785S-500
Date of Received	:	Sep. 11, 2014
Test Period	:	Sep. 24 ~ Dec. 12, 2014
Date of Issued	:	Dec. 31, 2014
Test Environment	:	Ambient Temperature： 22 ±2 ° C Relative Humidity：40 - 70 %
Standard	:	KDB 865664 D01 SAR Measurement 100 MHz to 6 GHz v01r03 KDB 865664 D02 RF Exposure Reporting v01r01 KDB 248227 D01 KDB 941225 D01 / D05 / D06 ANSI/IEEE C95.1-1999 IEEE Std. 1528-2013 IEEE Std. 1528a-2005 47 CFR Part §2.1093; CANADA RSS-102 Issue 4 March 2010 IEC 62209-2:2010
Test Lab Location	:	Chang-an Lab

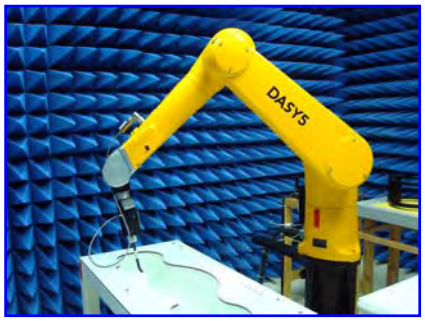

1. The test operations have to be performed with cautious behavior, the test results are as attached.
2. The test results are under chamber environment of A Test Lab Techno Corp. A Test Lab Techno Corp. does not assume responsibility for any conclusions and generalizations drawn from the test results with regard to other specimens or samples.
3. The measurement report has to be written approval of A Test Lab Techno Corp. It may only be reproduced or published in full. This report shall not be reproduced except in full, without the written approval of A Test Lab Techno Corp. The test results in the report only apply to the tested sample.

Approved By : Bill Hu (Bill Hu)

Tested By : Sky Chou (Sky Chou)

©2014 A Test Lab Techno Corp.

Contents

1. Summary of Maximum Reported SAR Value 4
2. Description of Equipment under Test (EUT) 5
3. Introduction 7
   3.1 SAR Definition 7
4. SAR Measurement Setup 8
   4.1 DASY E-Field Probe System 9
   4.2 Data Acquisition Electronic (DAE) System 12
   4.3 Robot 12
   4.4 Measurement Server 12
   4.5 Device Holder 13
   4.6 Phantom - SAM v4.0 13
   4.7 Oval Flat Phantom - ELI 4.0 14
   4.8 Data Storage and Evaluation 14
5. Tissue Simulating Liquids 17
   5.1 Ingredients 18
   5.2 Recipes 18
   5.3 Liquid Depth 19
6. SAR Testing with RF Transmitters 20
   6.1 SAR Testing with GPRS/EGPRS Transmitters 20
   6.2 SAR Testing with WCDMA Transmitters 20
   6.3 SAR Testing with HSDPA Transmitters 20
   6.4 SAR Testing with LTE-FDD Transmitters 22
   6.5 LTE Frequency range and channel bandwidth 23
   6.6 Power reduction 26
   6.7 SAR Testing with 802.11 Transmitters 27
   6.8 General Device Setup 27
   6.9 Conducted Power 29
   6.10 Antenna location 64
   6.11 Stand-alone SAR Evaluate 66
   6.12 Simultaneous Transmitting Evaluate 72
   6.13 SAR test reduction according to KDB 77
7. System Verification and Validation 79
   7.1 Symmetric Dipoles for System Verification 79
   7.2 Liquid Parameters 80
   7.3 Verification Summary 85
   7.4 Validation Summary 87
8. Test Equipment List 88
9. Measurement Uncertainty 89

©2014 A Test Lab Techno Corp.

10. Measurement Procedure 91
10.1 Spatial Peak SAR Evaluation 91
10.2 Area & Zoom Scan Procedures 92
10.3 Volume Scan Procedures 92
10.4 SAR Averaged Methods 92
10.5 Power Drift Monitoring 92
11. SAR Test Results Summary 93
11.1 Head Measurement SAR 93
11.2 Body Measurement SAR 93
11.3 Hot-spot mode Measurement SAR 93
11.4 Extremity Measurement SAR 101
11.5 SAR Measurement Variability 101
11.6 Std. C95.1-1999 RF Exposure Limit 103
12. Conclusion 104
13. References 104
14. SAR Measurement Guidance 104
Appendix A - System Performance Check 105
Appendix B - SAR Measurement Data 125
Appendix C - Calibration 320

©2014 A Test Lab Techno Corp.

1. Summary of Maximum Reported SAR Value

Band	Max. Reported Body SAR1g (W/Kg)
GPRS/EGPRS 850	0.716
GPRS/EGPRS 1900	0.966
WCDMA Band II	1.136
WCDMA Band IV	1.181
WCDMA Band V	0.611
LTE Band 2 (QPSK)	1.249
LTE Band 4 (QPSK)	1.435
LTE Band 5 (QPSK)	1.311
LTE Band 7 (QPSK)	1.396
LTE Band 12 (QPSK)	1.291
LTE Band 13 (QPSK)	1.180
LTE Band 17 (QPSK)	1.289
WLAN	0.164
Simultaneous Transmission	1.465

Note: The SAR limit (Head & Body: SAR1g 1.6 W/kg) for general population / uncontrolled exposure is specified in ANSI/IEEE C95.1-1991.

©2014 A Test Lab Techno Corp.

2. Description of Equipment under Test (EUT)

Applicant	Netgear Inc.	
Applicant Address	350 East Plumeria Drive, San Jose, California 95134 United States	
Manufacture	Netgear Inc.	
Manufacture Address	Suite 168 – 10760 Shellbridge Way, Richmond, BC Canada V6X 3H1	
Product Type	WWAN Mobile Hotspot Portable Device	
Trade Name	Netgear	
Model Number	AC785S-500	
IMEI No.	014197000002053	
Hardware Version	DV2-2	
Software Version	AC785S-111NAS_9903899_NTG9X25A_02.12.00.00_00_NA_00.02_000	
FCC ID	PY3AC785S	
RF Function	GPRS/EGPRS 850 GPRS/EGPRS 1900 WCDMA(RMC 12.2K) / HSDPA / HSUPA Band II WCDMA(RMC 12.2K) / HSDPA / HSUPA Band IV WCDMA(RMC 12.2K) / HSDPA / HSUPA Band V LTE Band 2 / Band 4 / Band 5 / Band 7 / Band 12 / Band 13 / Band 17 IEEE 802.11b / 802.11g / 802.11n (2.4GHz) 20MHz IEEE 802.11n (2.4GHz) 40MHz IEEE 802.11a / 802.11n (5GHz) 20MHz IEEE 802.11n (5GHz) 40MHz	
Tx Frequency	Band	Operate Frequency (MHz)
	GPRS/EGPRS 850	824.2 - 848.8
	GPRS/EGPRS 1900	1850.2 - 1909.8
	WCDMA(RMC 12.2K) / HSDPA / HSUPA Band II	1852.4 - 1907.6
	WCDMA(RMC 12.2K) / HSDPA / HSUPA Band IV	1712.4 - 1752.6
	WCDMA (RMC 12.2K) / HSDPA / HSUPA Band V	826.4 - 846.6
	LTE Band 2 (BW 1.4, 3, 5, 10, 15, 20 MHz)	1850.7 - 1909.3
	LTE Band 4 (BW 1.4, 3, 5, 10, 15, 20 MHz)	1710.4 - 1754.3
	LTE Band 5 (BW 1.4, 3, 5, 10 MHz)	824.7 - 848.3
	LTE Band 7 (BW 5, 10, 15, 20 MHz)	2502.5 - 2567.5
	LTE Band 12 (BW 1.4, 3, 5, 10 MHz)	699.7 - 715.3
	LTE Band 13 (BW 5, 10 MHz)	779.5 - 784.5
	LTE Band 17 (BW 5, 10 MHz)	706.5 - 713.5
	IEEE 802.11b / 802.11g / 802.11n (2.4GHz) 20MHz	2412 - 2462
	IEEE 802.11n (2.4GHz) 40MHz	2422 - 2452
	IEEE 802.11a U-NII Band I	5180 - 5220
	IEEE 802.11a U-NII Band III	5745 - 5825
	IEEE 802.11n 20MHz U-NII Band I	5180 - 5220
	IEEE 802.11n 20MHz U-NII Band III	5745 - 5825
	IEEE 802.11n 40MHz U-NII Band I	5190
	IEEE 802.11n 40MHz U-NII Band III	5755 - 5795

©2014 A Test Lab Techno Corp.

RF Conducted Power (Avg.)	Band	Power	
		W	dBm
	GPRS/EGPRS 850	1.614	32.08
	GPRS/EGPRS 1900	1.104	30.43
	WCDMA(RMC 12.2K) / HSDPA / HSUPA Band II	0.195	22.91
	WCDMA(RMC 12.2K) / HSDPA / HSUPA Band IV	0.217	23.37
	WCDMA (RMC 12.2K) / HSDPA / HSUPA Band V	0.219	23.41
	LTE Band 2	0.222	23.47
	LTE Band 4	0.231	23.64
	LTE Band 5	0.194	22.88
	LTE Band 7	0.199	22.98
	LTE Band 12	0.197	22.94
	LTE Band 13	0.198	22.96
	LTE Band 17	0.191	22.81
	IEEE 802.11b	0.010	10.16
	IEEE 802.11g	0.013	11.05
	IEEE 802.11n (2.4GHz) 20MHz	0.013	11.16
	IEEE 802.11n (2.4GHz) 40MHz	0.015	11.69
	IEEE 802.11a U-NII Band I	0.015	11.70
	IEEE 802.11a U-NII Band III	0.012	10.96
	IEEE 802.11n 20MHz U-NII Band I	0.015	11.62
	IEEE 802.11n 20MHz U-NII Band III	0.012	10.93
	IEEE 802.11n 40MHz U-NII Band I	0.013	11.14
	IEEE 802.11n 40MHz U-NII Band III	0.012	10.87
Antenna Type	IFA Antenna		
Device Category	Portable Device		
RF Exposure Environment	General Population / Uncontrolled		
Application Type	Certification		

This wireless portable device has been shown to be capable of compliance for localized specific absorption rate (SAR) for uncontrolled environment / general population exposure limits specified in Standard C95.1-1999 and had been tested in accordance with the measurement procedures specified in IEEE Std. 1528-2013 and IEEE Std. 1528a-2005.

©2014 A Test Lab Techno Corp.

3. Introduction

The A Test Lab Techno Corp. has performed measurements of the maximum potential exposure to the user of **Netgear Inc. Trade Name：Netgear　Model(s)：AC785S-500**. The test procedures, as described in American National Standards, Institute C95.1-1999〔1〕were employed and they specify the maximum exposure limit of 1.6mW/g as averaged over any 1 gram of tissue for portable devices being used within 20cm between user and EUT in the uncontrolled environment. A description of the product and operating configuration, detailed summary of the test results, methodology and procedures used in the equipment used are included within this test report.

3.1 SAR Definition

Specific Absorption Rate (SAR) is defined as the time derivative (rate) of the incremental energy (dw) absorbed by (dissipated in) an incremental mass (dm) contained in a volume element (dv) of a given density (ρ). It is also defined as the rate of RF energy absorption per unit mass at a point in an absorbing body (see Figure 2).

$$\text{SAR} = \frac{d}{dt}\left(\frac{dw}{dm}\right) = \frac{d}{dt}\left(\frac{dw}{\rho dv}\right)$$

Figure 2. **SAR Mathematical Equation**

SAR is expressed in units of Watts per kilogram (W/kg)

$$\text{SAR} = \frac{\sigma E^2}{\rho}$$

Where：

σ = conductivity of the tissue (S/m)

ρ = mass density of the tissue (kg/m3)

E = RMS electric field strength (V/m)

＊Note：

The primary factors that control rate of energy absorption were found to be the wavelength of the incident field in relations to the dimensions and geometry of the irradiated organism, the orientation of the organism in relation to the polarity of field vectors, the presence of reflecting surfaces, and whether conductive contact is made by the organism with a ground plane〔2〕

©2014 A Test Lab Techno Corp.

4. SAR Measurement Setup

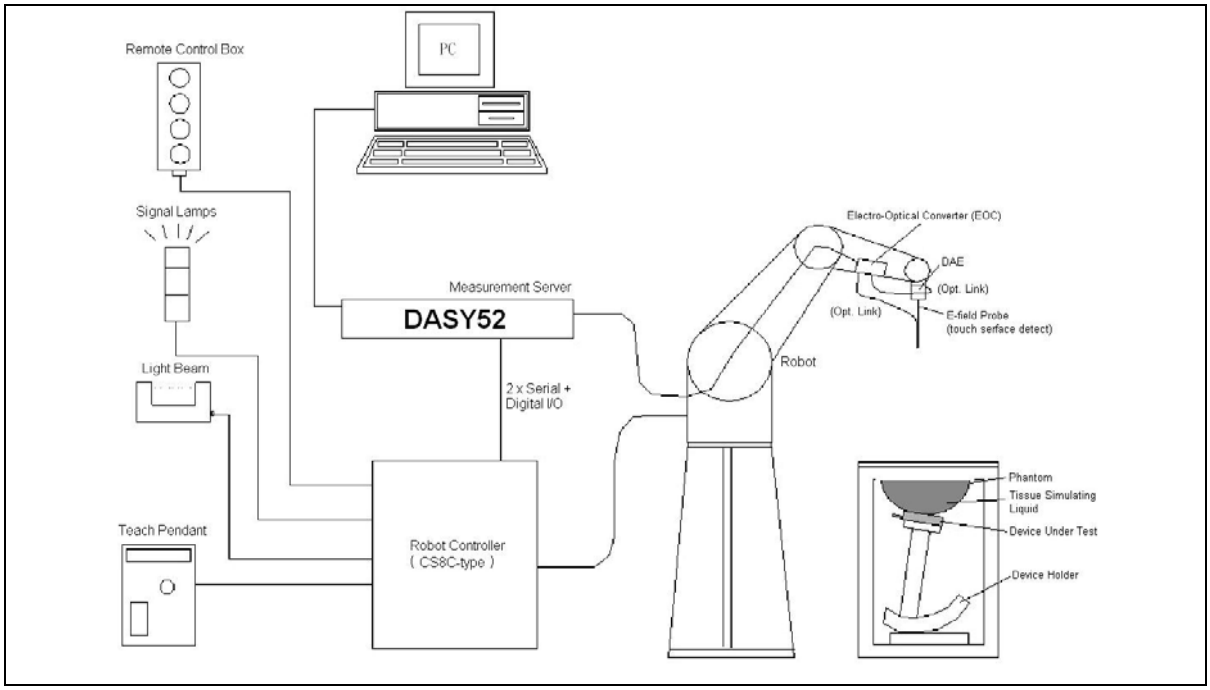

The DASY52 system for performing compliance tests consists of the following items:

1. A standard high precision 6-axis robot (Stäubli TX family) with controller, teach pendant and software. An arm extension for accommodating the data acquisition electronics (DAE).
2. A dosimetric probe, i.e., an isotropic E-field probe optimized and calibrated for usage in tissue simulating liquid. The probe is equipped with an optical surface detector system.
3. A data acquisition electronics (DAE) which performs the signal amplification, signal multiplexing, AD-conversion, offset measurements, mechanical surface detection, collision detection, etc. The unit is battery powered with standard or rechargeable batteries. The signal is optically transmitted to the EOC.
4. The function of the measurement server is to perform the time critical tasks such as signal filtering, control of the robot operation and fast movement interrupts.
5. A probe alignment unit which improves the (absolute) accuracy of the probe positioning.
6. A computer operating Windows 2000 or Windows XP.
7. DASY52 software.
8. Remote controls with teach pendant and additional circuitry for robot safety such as warning lamps, etc.
9. The SAM twin phantom enabling testing left-hand and right-hand usage.
10. The device holder for handheld mobile phones.
11. Tissue simulating liquid mixed according to the given recipes.
12. Validation dipole kits allowing validating the proper functioning of the system.

©2014 A Test Lab Techno Corp.

4.1 DASY E-Field Probe System

The SAR measurements were conducted with the dosimetric probe (manufactured by SPEAG), designed in the classical triangular configuration〔3〕and optimized for dosimetric evaluation. The probes is constructed using the thick film technique; with printed resistive lines on ceramic substrates. The probe is equipped with an optical multi-fiber line ending at the front of the probe tip. It is connected to the EOC box on the robot arm and provides an automatic detection of the phantom surface. Half of the fibers are connected to a pulsed infrared transmitter, the other half to a synchronized receiver. As the probe approaches the surface, the reflection from the surface produces a coupling from the transmitting to the receiving fibers. This reflection increases first during the approach, reaches maximum and then decreases. If the probe is flatly touching the surface, the coupling is zero. The distance of the coupling maximum to the surface is independent of the surface reflectivity and largely independent of the surface to probe angle. The DASY software reads the reflection during a software approach and looks for the maximum using a 2nd order fitting. The approach is stopped when reaching the maximum.

©2014 A Test Lab Techno Corp.

4.1.1 E-Field Probe Specification

Construction	Symmetrical design with triangular core
	Built-in optical fiber for surface detection System
	Built-in shielding against static charges
	PEEK enclosure material (resistant to organic solvents, e.q., glycol)
Calibration	In air from 10 MHz to 6 GHz
	In brain and muscle simulating tissue at frequencies of 750MHz, 835MHz, 1750MHz, 1900MHz, 2450MHz, 2600MHz, 5200MHz and 5800MHz (accuracy ±8%)
	Calibration for other liquids and frequencies upon request
Frequency	±0.2 dB (30 MHz to 6 GHz)
Directivity	±0.3 dB in brain tissue (rotation around probe axis)
	±0.5 dB in brain tissue (rotation normal probe axis)
	Dynamic Range 10μW/g to > 100mW/g; Linearity: ±0.2dB
Dimensions	Overall length: 337mm
	Tip length: 9mm
	Body diameter: 10mm
	Tip diameter: 2.5mm
	Distance from probe tip to dipole centers: 1.0mm
Application	General dosimetry up to 6GHz
	Compliance tests of mobile phones
	Fast automatic scanning in arbitrary phantoms

Figure 3. E-field Probe	Figure 4. Probe setup on robot

4.1.2 E-Field Probe Calibration process

Dosimetric Assessment Procedure

Each E-Probe/Probe Amplifier combination has unique calibration parameters. A TEM cell calibration procedure is conducted to determine the proper amplifier settings to enter in the probe parameters. The amplifier settings are determined for a given frequency by subjecting the probe to a known E-field density (1 mW/cm^2) using an RF Signal generator, TEM cell, and RF Power Meter.

Free Space Assessment

The free space E-field from amplified probe outputs is determined in a test chamber. This calibration can be performed in a TEM cell if the frequency is below 1 GHz and in a waveguide or other methodologies above 1 GHz for free space. For the free space calibration, the probe is placed in the volumetric center of the cavity and at the proper orientation with the field. The probe is rotated 360 degrees until the three channels show the maximum reading. The power density readings equates to 1 mW/cm^2.

Temperature Assessment

E-field temperature correlation calibration is performed in a flat phantom filled with the appropriate simulated head tissue. The E-field in the medium correlates with the temperature rise in the dielectric medium. For temperature correlation calibration a RF transparent thermistor-based temperature probe is used in conjunction with the E-field probe.

$$SAR = C\frac{\Delta T}{\Delta t}$$

Where：

Δt = Exposure time (30 seconds),

C = Heat capacity of tissue (head or body),

ΔT = Temperature increase due to RF exposure.

Or $$SAR = \frac{|E|^2 \sigma}{\rho}$$

Where：

σ = Simulated tissue conductivity,

ρ = Tissue density (kg/m^3).

4.2 Data Acquisition Electronic (DAE) System

Cell Controller

Processor：	Intel Core(TM)2 CPU
Clock Speed：	@ 1.86GHz
Operating System：	Windows XP Professional

Data Converter

Features：	Signal Amplifier, multiplexer, A/D converter, and control logic
Software：	DASY52 v52.8 (7) & SEMCAD X Version 14.6.10 (7164)
Connecting Lines：	Optical downlink for data and status info
	Optical uplink for commands and clock

4.3 Robot

Positioner：	Stäubli Unimation Corp. Robot Model: TX90XL
Repeatability：	±0.02 mm
No. of Axis：	6

4.4 Measurement Server

Processor：	PC/104 with a 400MHz intel ULV Celeron
I/O-board：	Link to DAE4 (or DAE3)
	16-bit A/D converter for surface detection system
	Digital I/O interface
	Serial link to robot
	Direct emergency stop output for robot

©2014 A Test Lab Techno Corp.

4.5 Device Holder

The DASY device holder is constructed of low-loss POM material having the following dielectric parameters: relative permittivity ε=3 and loss tangent δ=0.02. The amount of dielectric material has been reduced in the closest vicinity of the device, since measurements have suggested that the influence of the clamp on the test results could thus be lowered.

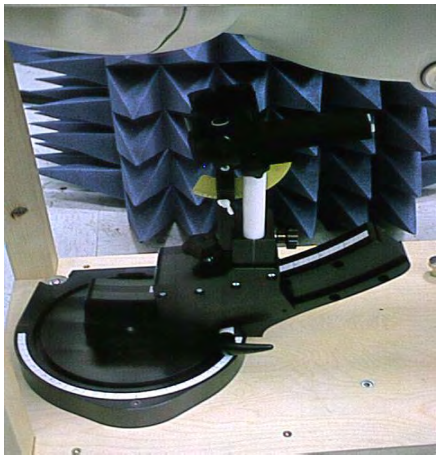

Figure 5. Device Holder

4.6 Phantom - SAM v4.0

The shell corresponds to the specifications of the Specific Anthropomorphic Mannequin (SAM) phantom defined in IEEE 1528 and IEC 62209. It enables the dosimetric evaluation of left and right hand phone usage as well as body mounted usage at the flat phantom region. A cover prevents evaporation of the liquid. Reference markings on the phantom allow the complete setup of all predefined phantom positions and measurement grids by manually teaching three points with the robot.

Shell Thickness	2 ±0.2 mm
Filling Volume	Approx. 25 liters
Dimensions	1000×500 mm (L×W)

Table 1. Specification of SAM v4.0

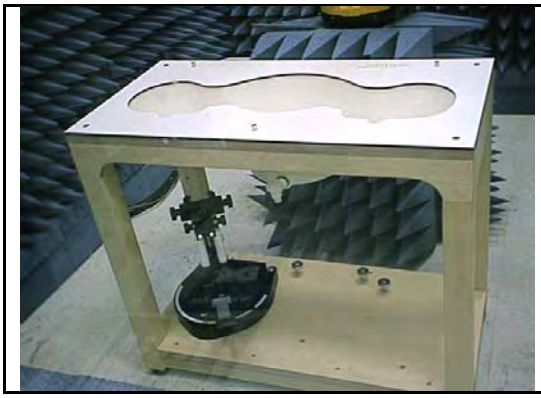

Figure 6. SAM Twin Phantom

4.7 Oval Flat Phantom - ELI 4.0

The shell corresponds to the specifications of the Specific Anthropomorphic Mannequin (Oval Flat) phantom defined in IEEE 1528-2013, IEEE Std. 1528a-2005, CENELEC 50361 and IEC 62209. It enables the dosimetric evaluation of wireless portable device usage as well as body mounted usage at the flat phantom region. A cover prevents evaporation of the liquid. Reference markings on the phantom allow the complete setup of all predefined phantom positions and measurement grids by manually teaching three points with the robot.

Shell Thickness	2 ±0.2 mm
Filling Volume	Approx. 30 liters
Dimensions	190×600×400 mm (H×L×W)

Table 2. Specification of ELI 4.0

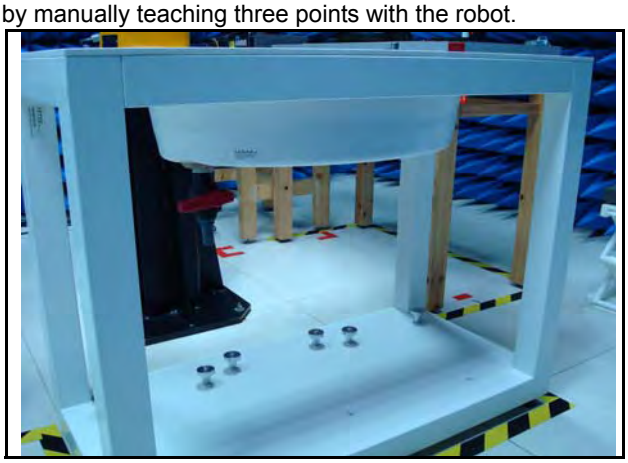

Figure 7. Oval Flat Phantom

4.8 Data Storage and Evaluation

4.8.1 Data Storage

The DASY software stores the assessed data from the data acquisition electronics as raw data (in microvolt readings from the probe sensors), together with all the necessary software parameters for the data evaluation (probe calibration data, liquid parameters and device frequency and modulation data) in measurement files with the extension DA4 or DA5. The post processing software evaluates the desired unit and format for output each time the data is visualized or exported. This allows verification of the complete software setup even after the measurement and allows correction of erroneous parameter settings. For example, if a measurement has been performed with an incorrect crest factor parameter in the device setup, the parameter can be corrected afterwards and the data can be reevaluated.

4.8.2 Data Evaluation

The DASY post processing software (SEMCAD) automatically executes the following procedures to calculate the field units from the microvolt readings at the probe connector. The parameters used in the evaluation are stored in the configuration modules of the software：

Probe parameters：	- Sensitivity	*Normi, ai0, ai1, ai2*
	- Conversion factor	*ConvFi*
	- Diode compression point	*dcpi*
Device parameters：	- Frequency	*f*
	- Crest factor	*cf*
Media parameters：	- Conductivity	*σ*
	- Density	*ρ*

These parameters must be set correctly in the software. They can be found in the component documents or they can be imported into the software from the configuration files issued for the DASY components. In the direct measuring mode of the multimeter option, the parameters of the actual system setup are used. In the scan visualization and export modes, the parameters stored in the corresponding document files are used.
The first step of the evaluation is a linearization of the filtered input signal to account for the compression characteristics of the detector diode. The compensation depends on the input signal, the diode type and the DC-transmission factor from the diode to the evaluation electronics. If the exciting field is pulsed, the crest factor of the signal must be known to correctly compensate for peak power. The formula for each channel can be given as：

$$V_i = U_i + U_i^2 \cdot \frac{cf}{dcp_i}$$

With *Vi* = compensated signal of channel i (i = x, y, z)
Ui = input signal of channel i (i = x, y, z)
cf = crest factor of exciting field (DASY parameter)
dcpi = diode compression point (DASY parameter)

From the compensated input signals the primary field data for each channel can be evaluated：

E-field probes： $$E_i = \sqrt{\frac{V_i}{Norm_i \cdot ConvF}}$$

H-field probes：

$$H_i = \sqrt{V_i} \cdot \frac{a_{i0} + a_{i1} f + a_{i2} f^2}{f}$$

with *Vi* = compensated signal of channel i (i = x, y, z)
Normi = sensor sensitivity of channel i (i = x, y, z)
μV/(V/m)2 for E-field Probes
ConvF = sensitivity enhancement in solution
aij = sensor sensitivity factors for H-field probes
f = carrier frequency [GHz]
Ei = electric field strength of channel i in V/*m*
Hi = magnetic field strength of channel i in A/m

The RSS value of the field components gives the total field strength (Hermitian magnitude)：

$$E_{tot} = \sqrt{E_x^2 + E_y^2 + E_z^2}$$

The primary field data are used to calculate the derived field units.

$$SAR = E_{tot}^2 \cdot \frac{\sigma}{\rho \cdot 1000}$$

with *SAR* = local specific absorption rate in mW/g
Etot = total field strength in V/m
σ = conductivity in [mho/m] or [Siemens/m]
ρ = equivalent tissue density in g/cm3

∗Note：That the density is set to 1, to account for actual head tissue density rather than the density of the tissue simulating liquid.

The power flow density is calculated assuming the excitation field to be a free space field.

$$P_{pwe} = \frac{E_{tot}^2}{3770} \quad \text{or} \quad P_{pwe} = \frac{H_{tot}^2}{37.7}$$

with *Ppwe* = equivalent power density of a plane wave in mW/cm2
Etot = total electric field strength in V/m
Htot = total magnetic field strength in A/m

5. *Tissue Simulating Liquids*

The mixture is calibrated to obtain proper dielectric constant (permittivity) and conductivity of the tissue.
The dielectric parameters of the liquids were verified prior to the SAR evaluation using an 85070C Dielectric Probe Kit and an E5071B Network Analyzer.

IEEE SCC-34/SC-2 in 1528 recommended Tissue Dielectric Parameters

The head tissue dielectric parameters recommended by the IEEE SCC-34/SC-2 in 1528 have been incorporated in the following table. These head parameters are derived from planar layer models simulating the highest expected SAR for the dielectric properties and tissue thickness variations in human head. Other head and body tissue parameters that have not been specified in 1528 are derived from the tissue dielectric parameters computed from the 4-Cole-Cole equation and extrapolated according to the head parameter specified in 1528.

Target Frequency	Head		Body	
(MHz)	εr	σ (S/m)	εr	σ (S/m)
150	52.3	0.76	61.9	0.80
300	45.3	0.87	58.2	0.92
450	43.5	0.87	56.7	0.94
835	41.5	0.90	55.2	0.97
900	41.5	0.97	55.0	1.05
915	41.5	0.98	55.0	1.06
1450	40.5	1.20	54.0	1.30
1610	40.3	1.29	53.8	1.40
1800 - 2000	40.0	1.40	53.3	1.52
2450	39.2	1.80	52.7	1.95
3000	38.5	2.40	52.0	2.73
5800	35.3	5.27	48.2	6.00
(εr = relative permittivity, σ = conductivity and ρ = 1000 kg/m3)				

Table 3. Tissue dielectric parameters for head and body phantoms

5.1 Ingredients

The following ingredients are used:

- Water: deionized water (pure H_20), resistivity ≥ 16 M Ω -as basis for the liquid
- Sugar: refied white sugar (typically 99.7 % sucrose, available as crystal sugar in food shops) -to reduce relative permittivity
- Salt: pure NaCl -to increase conductivity
- Cellulose: Hydroxyethyl-cellulose, medium viscosity (75-125 mPa.s, 2% in water, 20°C), CAS # 54290 -to increase viscosity and to keep sugar in solution.
- Preservative: Preventol D-7 Bayer AG, D-51368 Leverkusen, CAS # 55965-84-9 -to prevent the spread of bacteria and molds
- DGBE: Diethylenglycol-monobuthyl ether (DGBE), Fluka Chemie GmbH, CAS # 112-34-5 -to reduce relative permittivity

5.2 Recipes

The following tables give the recipes for tissue simulating liquids to be used in different frequency bands.
Note: The goal dielectric parameters (at 22 ℃) must be achieved within a tolerance of ±5% for εand ±5% for σ.

Ingredients (% by weight)	Frequency (MHz)											
	750		835		1750		1900		2450		2600	
Tissue Type	Head	Body	Head	Body	Head	Body	Head	Body	Head	Body	Head	Body
Water	39.28	51.30	41.45	52.40	54.50	40.20	54.90	40.40	62.70	73.20	60.30	71.40
Salt (NaCl)	1.47	1.42	1.45	1.50	0.17	0.49	0.18	0.50	0.50	0.10	0.60	0.20
Sugar	58.15	46.18	56.00	45.00	0.00	0.00	0.00	0.00	0.00	0.00	0.00	0.00
HEC	1.00	1.00	1.00	1.00	0.00	0.00	0.00	0.00	0.00	0.00	0.00	0.00
Bactericide	0.10	0.10	0.10	0.10	0.00	0.00	0.00	0.00	0.00	0.00	0.00	0.00
Triton X-100	0.00	0.00	0.00	0.00	0.00	0.00	0.00	0.00	0.00	0.00	0.00	0.00
DGBE	0.00	0.00	0.00	0.00	45.33	59.31	44.92	59.10	36.80	26.70	39.10	28.40
Dielectric Constant	41.88	54.60	42.54	56.10	40.10	53.60	39.90	54.00	39.80	52.50	39.80	52.50
Conductivity (S/m)	0.90	0.97	0.91	0.95	1.39	1.49	1.42	1.45	1.88	1.78	1.88	1.78

Salt: 99^+% Pure Sodium Chloride Sugar: 98^+% Pure Sucrose
Water: De-ionized, 16 MΩ$^+$ resistivity HEC: Hydroxyethyl Cellulose
DGBE: 99^+% Di(ethylene glycol) butyl ether, [2-(2-butoxyethoxy)ethanol]
Triton X-100 (ultra pure): Polyethylene glycol mono [4-(1,1, 3, 3-tetramethylbutyl)phenyl]ether

©2014 A Test Lab Techno Corp.

5.3 Liquid Depth

According to KDB865664 ,the depth of tissue-equivalent liquid in a phantom must be ≥ 15.0 cm with ≤ ± 0.5 cm variation for SAR measurements ≤ 3 GHz and ≥ 10.0 cm with ≤ ± 0.5 cm variation for measurements > 3 GHz.

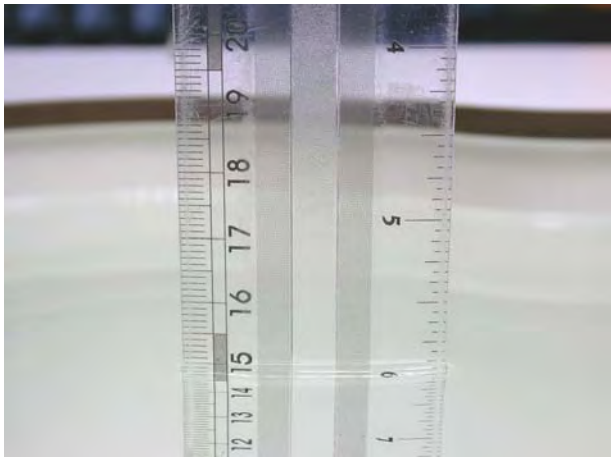	
Figure 8. Head-Position	Figure 9. Body-Position

6. SAR Testing with RF Transmitters

6.1 SAR Testing with GPRS/EGPRS Transmitters

Configure the basestation to support GMSK and 8PSK call respectively, and set timeslot transmission for GMSK GPRS and 8PSK EDGE. Measure and record power outputs for both modulations, that test is applicable.

6.2 SAR Testing with WCDMA Transmitters

Configure the basestation to support all WCDMA tests in respect to the 3GPP 34.121.Measure the power at Ch4132, 4183 and 4233 for US cell; Ch9262, 9400 and 9538 for US PCS Band.

- Step 1: set a Test Mode 1 loop back with a 12.2kbps Reference Measurement Channel (RMC).
- Step 2: set and send continuously up power control commands to the device.
- Step 3: measure the power at the device antenna connector using the power meter with average detector and test SAR

6.3 SAR Testing with HSDPA Transmitters

HSDPA Date Devices setup for SAR Measurement

HSDPA should be configured according to the UE category of a test device. The number of HS-DSCH/HS-PDSCHs, HARQ processes, minimum inter-TTI interval, transport block sizes and RV coding sequence are defined by the H-set. To maintain a consistent test configuration and stable transmission conditions, QPSK is used in the H-set for SAR testing. HS-DPCCH should be configured with a CQI feedback cycle of 4 ms with a CQI repetition factor of 2 to maintain a constant rate of active CQI slots. DPCCH and DPDCH gain factors(βc, βd), and HS-DPCCH power offset parameters (ΔACK, ΔNACK, ΔCQI) should be set according to values indicated in the Table below. The CQI value is determined by the UE category, transport block size, number of HS-PDSCHs and modulation used in the H-set.

Setup for Release 5 HSDPA							
Sub-test	βc	βd	βd (SF)	βc/βd	βhs(1,2)	CM(3) (dB)	MRP(3) (dB)
1	2/15	15/15	64	2/15	4/15	0.0	0.0
2	12/15(4)	15/15(4)	64	12/15(4)	24/15	1.0	0.0
3	15/15	8/15	64	15/8	30/15	1.5	0.5
4	15/15	4/15	64	15/4	30/15	1.5	0.5

Note

1. Δ_{ACK}, Δ_{NACK} and Δ_{CQI} = 8 ⇔ Ahs = βhs/βc = 30/15 ⇔ βhs= 30/15 *βc
2. For theHS-DPCCH power mask requirement test in clause 5.2C, 5.7A, and the Error Vector Magnitude(EVM) with HS-DPCCH test in clause 5.13.1A and HSDPA EVM with phase discontinuity in clause 5.13.1AA, Δ_{ACK} and Δ_{NACK} = 30/15 with βhs = 30/15 *βc and Δ_{CQI} = 24/15 with βhs = 24/15*βc
3. CM = 1 for βc/βd =12/15, βhs/βc=24/15. For all other combinations of DPDCH, DPCCH and HS-DPCCH the MPR is based on the relative CM difference. This is applicable for only UEs that support HSDPA in release 6 and later releases.
4. For subtest 2 the βc/βd ratio of 12/15 for the TFC during the measurement period (TF1, TF0) is achieved by setting the signaled gain factors for the reference TFC (TF1, TF1) to βc = 11/15 and βd = 15/15.

HSPA Date Devices setup for SAR Measurement.

The following procedures are applicable to HSPA (HSUPA/HSDPA) data devices operating under 3GPP Release 6. Body exposure conditions generally apply to these devices, including handsets and data modems operating in various electronic devices. HSUPA operates in conjunction with WCDMA and HSDPA. SAR is initially measured in WCDMA test configurations without HSPA. The default test configuration is to establish a radio link between the DUT and a communication test set to configure a 12.2 kbps RMC (reference measurement channel) in Test Loop Mode 1. SAR for HSPA is selectively measured with HS-DPCCH, EDPCCH and E-DPDCH, all enabled, along with a 12.2 kbps RMC using the highest SAR configuration in WCDMA with 12.2 kbps RMC only. An FRC is configured according to HSDPCCH Sub-test 1 using H-set 1 and QPSK. HSPA is configured according to E-DCH Subtest 5 requirements. SAR for other HSPA sub-test configurations is also confirmed selectively according to output power, exposure conditions and E-DCH UE Category. Maximum output power is verified according to procedures in applicable versions of 3GPP TS 34.121 and SAR must be measured according to these maximum output conditions. The UE Categories for HSDPCCH and HSPA should be clearly identified in the SAR report. The following procedures are applicable only if Maximum Power Reduction (MPR) is implemented according to Cubic Metric (CM) requirements.

When voice transmission and head exposure conditions are applicable to a WCDMA/HSPA data device, head exposure is measured according to the 'Head SAR Measurements' procedures in the 'WCDMA Handsets' section of this document. SAR for body exposure configurations are measured according to the 'Body SAR Measurements' procedures in the 'WCDMA Handsets' section of this document. In addition, body SAR is also measured for HSPA when the maximum average output of each RF channel with HSPA active is at least ¼ dB higher than that measured without HSPA using 12.2 kbps RMC or the maximum SAR for 12.2 kbps RMC is above 75% of the SAR limit. Body SAR for HSPA is measured with E-DCH Sub-test 5, using H-Set 1 and QPSK for FRC and a 12.2 kbps RMC configured in Test Loop Mode 1 with power control algorithm 2, according to the highest body SAR configuration in 12.2 kbps RMC without HSPA. When VOIP is applicable for head exposure, SAR is not required when the maximum output of each RF channel with HSPA is less than ¼ dB higher than that measured using 12.2 kbps RMC; otherwise, the same HSPA configuration used for body measurements should be used to test for head exposure.

Due to inner loop power control requirements in HSPA, a commercial communication test set should be used for the output power and SAR tests. The 12.2 kbps RMC, FRC H-set 1 and E-DCH configurations for HSPA should be configured according to the β values indicated below as well as other applicable procedures described in the 'WCDMA Handset' and 'Release 5 HSDPA Data Devices' sections of this document.

©2014 A Test Lab Techno Corp.

The highest body SAR measured in Antenna Extended & Retracted configurations on a channel in 12.2 kbps RMC. The possible channels are the High, Middle & Low channel. Contact the FCC Laboratory for test and approval requirements if the maximum output power measured in E-DCH Sub-test 2 - 4 is higher than Sub-test 5.

Setup for Release 6 HSPA / Release 7 HSPA+													
Sub-test	βc	βd	βd (SF)	βc/βd	βhs(1)	βec	βed	Bed (SF)	Bed (codes)	CM(2) (dB)	MPR (dB)	AG(4) Index	E-TFCI
1	11/15(3)	15/15(3)	64	11/15(3)	22/15	209/225	1039/225	4	1	1.0	0.0	20	75
2	6/15	15/15	64	6/15	12/15	12/15	94/75	4	1	3.0	2.0	12	67
3	15/15	9/15	64	15/9	30/15	30/15	βed1: 47/15 βed2: 47/15	4	2	2.0	1.0	15	92
4	2/15	15/15	64	2/15	4/15	2/15	56/75	4	1	3.0	2.0	17	71
5	15/15(4)	15/15(4)	64	15/15(4)	30/15	24/15	134/15	4	1	1.0	0.0	21	81

Note

1. Δ_{ACK}, Δ_{NACK} and Δ_{CQI} = 8 ⇔ Ahs = βhs/βc = 30/15 ⇔ βhs= 30/15 *βc.
2. CM = 1 for βc/βd =12/15, βhs/βc=24/15. For all other combinations of DPDCH, DPCCH, HS-DPCCH, E-DPDCH and E-DPCCH the MPR is based on the relative CM difference.
3. For subtest 1 the βc/βd ratio of 11/15 for the TFC during the measurement period (TF1, TF0) is achieved by setting the signaled gain factors for the reference TFC (TF1, TF1) to βc = 10/15 and βd = 15/15.
4. For subtest 5 the βc/βd ratio of 15/15 for the TFC during the measurement period (TF1, TF0) is achieved by setting the signaled gain factors for the reference TFC (TF1, TF1) to βc = 14/15 and βd = 15/15.
5. Testing UE using E-DPDCH Physical Layer category 1 Sub-test 3 is not required according to TS 25.306 Table 5.1g.
6. βed can not be set directly; it is set by Absolute Grant Value.

6.4 SAR Testing with LTE-FDD Transmitters

All SAR measurements for LTE were performed using the Anritsu MT8820C. A closed loop power control setting allowed the UE to transmit at the maximum output power during the SAR measurements.Configure the basestation to support LTE tests in respect to the 3GPP 36.521-1,and set ch , RB allocation number ,RB allocation offset , and send continuously Up power control commands to the device.
MPR was enabled for this device. A-MPR was disabled for all SAR test measurements.

6.5 LTE Frequency range and channel bandwidth

Channel bandwidth support:

Band	BW (MHz)					
	1.4	3	5	10	15	20
LTE Band 2	V	V	V	V	V	V
LTE Band 4	V	V	V	V	V	V
LTE Band 5	V	V	V	V		
LTE Band 7			V	V	V	V
LTE Band 12	V	V	V	V		
LTE Band 13			V	V		
LTE Band 17			V	V		

LTE Band	Bandwidth (MHz)	Test requency ID	N_{UL}	Frequency of Uplink (MHz)
LTE Band 2	1.4	Low Range	18607	1850.7
		Mid Range	18900	1880.0
		High Range	19193	1909.3
	3	Low Range	18615	1851.5
		Mid Range	18900	1880.0
		High Range	19185	1908.5
	5	Low Range	18625	1852.5
		Mid Range	18900	1880.0
		High Range	19175	1907.5
	10	Low Range	18650	1855.0
		Mid Range	18900	1880.0
		High Range	19150	1905.0
	15	Low Range	18675	1857.5
		Mid Range	18900	1880.0
		High Range	19125	1902.5
	20	Low Range	18700	1860.0
		Mid Range	18900	1880.0
		High Range	19100	1900.0

©2014 A Test Lab Techno Corp.

LTE Band	Bandwidth (MHz)	Test requency ID	N_{UL}	Frequency of Uplink (MHz)
LTE Band 4	1.4	Low Range	19957	1710.7
		Mid Range	20175	1732.5
		High Range	20393	1754.3
	3	Low Range	19965	1711.5
		Mid Range	20175	1732.5
		High Range	20385	1753.5
	5	Low Range	19975	1712.5
		Mid Range	20175	1732.5
		High Range	20375	1752.5
	10	Low Range	20000	1715.0
		Mid Range	20175	1732.5
		High Range	20350	1750.0
	15	Low Range	20025	1717.5
		Mid Range	20175	1732.5
		High Range	20325	1747.5
	20	Low Range	20050	1720.0
		Mid Range	20175	1732.5
		High Range	20300	1745.0
LTE Band 5	1.4	Low Range	20407	824.7
		Mid Range	20525	836.5
		High Range	20643	848.3
	3	Low Range	20415	825.5
		Mid Range	20525	836.5
		High Range	20635	847.5
	5	Low Range	20425	826.5
		Mid Range	20525	836.5
		High Range	20625	846.5
	10	Low Range	20450	829.0
		Mid Range	20525	836.5
		High Range	20600	844.0

©2014 A Test Lab Techno Corp.

LTE Band	Bandwidth (MHz)	Test requency ID	N_{UL}	Frequency of Uplink (MHz)
LTE Band 7	5	Low Range	20775	2502.5
		Mid Range	21100	2535.0
		High Range	21425	2567.5
	10	Low Range	20800	2505.0
		Mid Range	21100	2535.0
		High Range	21400	2565.0
	15	Low Range	20825	2507.5
		Mid Range	21100	2535.0
		High Range	21375	2562.5
	20	Low Range	20850	2510.0
		Mid Range	21100	2535.0
		High Range	21350	2560.0
LTE Band 12	1.4	Low Range	23017	699.7
		Mid Range	23095	707.5
		High Range	23173	715.3
	3	Low Range	23025	700.5
		Mid Range	23095	707.5
		High Range	23165	714.5
	5	Low Range	23035	701.5
		Mid Range	23095	707.5
		High Range	23155	713.5
	10	Low Range	23060	704.0
		Mid Range	23095	707.5
		High Range	23130	711.0
LTE Band 13	5	Low Range	23205	779.5
		Mid Range	23230	782.0
		High Range	23255	784.5
	10	Mid Range	23230	782.0
LTE Band 17	5	Low Range	23755	706.5
		Mid Range	23790	710.0
		High Range	23825	713.5
	10	Low Range	23780	709.0
		Mid Range	23790	710.0
		High Range	23800	711.0

©2014 A Test Lab Techno Corp.

6.5.1 Maximum power reduction (MPR)

Identify the LTE voice/data requirements in each operating mode and exposure condition with respect to head and body test configurations, antenna locations, handset flip-cover or slide positions, antenna diversity conditions etc.

The voice and data transmission:

- Data only device.

Identify if Maximum Power Reduction (MPR) is optional or mandatory, i.e. built-in by design:

- Maximum Power Reduction (MPR) is mandatory, i.e. built-in by design.
- A-MPR (additional MPR) must be disabled
- A-MPR was disabled during testing.

Maximum Power Reduction (MPR) for Power Class 3							
Channel bandwidth / Transmission bandwidth configuration (RB)							
Modulation	1.4 MHz	3 MHz	5 MHz	10 MHz	15 MHz	20MHz	MPR (dB)
QPSK	> 5	> 4	> 8	> 12	> 16	> 18	≤ 1
16 QAM	≤ 5	≤ 4	≤ 8	≤ 12	≤ 16	≤ 18	≤ 1
16 QAM	> 5	> 4	> 8	> 12	> 16	> 18	≤ 2

6.6 Power reduction

No power reduction issue.

6.7 SAR Testing with 802.11 Transmitters

Normal network operating configurations are not suitable for measuring the SAR of 802.11 b/g transmitters. Unpredictable fluctuations in network traffic and antenna diversity conditions can introduce undesirable variations in SAR results. The SAR for these devices should be measured using chipset based test mode software to ensure the results are consistent and reliable.

6.8 General Device Setup

Chipset based test mode software is hardware dependent and generally varies among manufacturers. The device operating parameters established in test mode for SAR measurements must be identical to those programmed in production units, including output power levels, amplifier gain settings and other RF performance tuning parameters. The test frequencies should correspond to actual channel frequencies defined
for domestic use. SAR for devices with switched diversity should be measured with only one antenna transmitting at a time during each SAR measurement, according to a fixed modulation and data rate.
The same data pattern should be used for all measurements.

Frequency Channel Configurations

802.11 a/b/g and 4.9 GHz operating modes are tested independently according to the service requirements in each frequency band. 802.11 b/g modes are tested on channels 1, 6 and 11. 802.11a is tested for UNII operations on channels 36 and 48 in the 5.15-5.25 GHz band; channels 52 and 64 in the 5.25-5.35 GHz band; channels 104, 116, 124 and 136 in the 5.470-5.725 GHz band; and channels 149 and 161 in the 5.8 GHz band. When 5.8 GHz §15.247 is also available, channels 149, 157 and 165 should be tested instead of the UNII channels. 4.9 GHz is tested on channels 1, 10 and 5 or 6, whichever has the higher output power, for 5 MHz channels; channels 11, 15 and 19 for 10 MHz channels; and channels 21 and 25 for 20 MHz channels. These are referred to as the “default test channels”. 802.11g mode was evaluated only if the output power was 0.25 dB higher than the 802.11b mode.

©2014 A Test Lab Techno Corp.

IEEE 802.11 Test Channels per FCC Requirement								
Mode		GHz	Channel	Turbo Channel	Default Test "Channels"			
					§15.247		UNII	
					802.11b	802.11g		
IEEE 802.11 b/g		2412	1#		✓	▽		
		2437	6	6	✓	▽		
		2462	11#		✓	▽		
IEEE 802.11a	UNII	5.18	36				✓	
		5.20	40	42 (5.21 GHz)				*
		5.22	44					*
		5.24	48	50 (5.25 GHz)			✓	
		5.26	52				✓	
		5.28	56	58 (5.29 GHz)				*
		5.30	60					*
		5.32	64				✓	
		5.500	100	Unknown				*
		5.520	104				✓	
		5.540	108					*
		5.560	112					*
		5.580	116				✓	
		5.660	132					*
		5.680	136				✓	
		5.700	140					*
	UNII or §15.247	5.745	149		✓		✓	
		5.765	153	152 (5.76 GHz)		*		*
		5.785	157		✓			*
		5.805	161	160 (5.80 GHz)		*	✓	
	§15.247	5.825	165		✓			

✓ = "default test channels"

* = possible 802.11a channels with maximum average output > the "default test channels"

▽ = possible 802.11g channels with maximum average output ¼ dB ≥ the "default test channels"

= when output power is reduced for channel 1 and/or 11 to meet restricted band requirements the

6.9 Conducted Power

Band	Modulation	Data Rate	CH	Frequency (MHz)	Average Power (dBm)	
					Time Average	Burst Average
GPRS 850 Multi Class :10 Max Up:2 Max Down:4 Sum:5	GMSK	4Down1Up Duty factor 1/8	Lowest	824.2	22.62	31.65
			Middle	836.6	22.85	31.88
			Highest	848.8	23.05	**32.08**
		3Down2Up Duty factor 2/8	Lowest	824.2	24.46	30.48
			Middle	836.6	24.39	30.41
			Highest	848.8	24.34	30.36
EGPRS 850 Multi Class :12 Max Up:4 Max Down:4 Sum:5	8PSK	4Down1Up Duty factor 1/8	Lowest	824.2	18.38	27.41
			Middle	836.6	18.19	27.22
			Highest	848.8	18.15	27.18
		3Down2Up Duty factor 2/8	Lowest	824.2	21.21	27.23
			Middle	836.6	20.99	27.01
			Highest	848.8	21.00	27.02
		2Down3Up Duty factor 3/8	Lowest	824.2	22.81	27.07
			Middle	836.6	22.65	26.91
			Highest	848.8	22.59	26.85
		1Down4Up Duty factor 4/8	Lowest	824.2	23.98	26.99
			Middle	836.6	23.72	26.73
			Highest	848.8	23.67	26.68

Note: 1. Time Average power slot duty cycle factor calculate:

1up: Average burst power+10*LOG(1/8)

2up: Average burst power+10*LOG(2/8)

3up: Average burst power+10*LOG(3/8)

4up: Average burst power+10*LOG(4/8)

©2014 A Test Lab Techno Corp.

Band	Modulation	Data Rate	CH	Frequency (MHz)	Average Power (dBm)	
					Time Average	Burst Average
GPRS 1900 Multi Class :10 Max Up:2 Max Down:4 Sum:5	GMSK	4Down1Up Duty factor 1/8	Lowest	1850.2	21.40	**30.43**
			Middle	1880.0	21.26	30.29
			Highest	1909.8	21.10	30.13
		3Down2Up Duty factor 2/8	Lowest	1850.2	22.59	28.61
			Middle	1880.0	22.45	28.47
			Highest	1909.8	22.52	28.54
EGPRS 1900 Multi Class :12 Max Up:4 Max Down:4 Sum:5	8PSK	4Down1Up Duty factor 1/8	Lowest	1850.2	17.59	26.62
			Middle	1880.0	17.44	26.47
			Highest	1909.8	17.40	26.43
		3Down2Up Duty factor 2/8	Lowest	1850.2	20.50	26.52
			Middle	1880.0	20.30	26.32
			Highest	1909.8	20.32	26.34
		2Down3Up Duty factor 3/8	Lowest	1850.2	22.09	26.35
			Middle	1880.0	21.90	26.16
			Highest	1909.8	21.92	26.18
		1Down4Up Duty factor 4/8	Lowest	1850.2	23.32	26.33
			Middle	1880.0	23.11	26.12
			Highest	1909.8	23.08	26.09

Note: 1. Time Average power slot duty cycle factor calculate:

1up: Average burst power+10*LOG(1/8)

2up: Average burst power+10*LOG(2/8)

3up: Average burst power+10*LOG(3/8)

4up: Average burst power+10*LOG(4/8)

©2014 A Test Lab Techno Corp.

Band	Modulation	Sub-test	CH	Frequency (MHz)	Burst Average Power (dBm)
WCDMA Band II	RMC12.2K	---	Lowest	1852.4	22.68
			Middle	1880.0	22.62
			Highest	1907.6	**22.91**
HSDPA Band II	QPSK	1	Lowest	1852.4	21.83
			Middle	1880.0	21.81
			Highest	1907.6	22.02
		2	Lowest	1852.4	21.81
			Middle	1880.0	21.77
			Highest	1907.6	21.97
		3	Lowest	1852.4	21.35
			Middle	1880.0	21.34
			Highest	1907.6	21.56
		4	Lowest	1852.4	21.34
			Middle	1880.0	21.33
			Highest	1907.6	21.55
HSUPA Band II	QPSK	1	Lowest	1852.4	21.33
			Middle	1880.0	21.24
			Highest	1907.6	21.54
		2	Lowest	1852.4	19.39
			Middle	1880.0	19.33
			Highest	1907.6	19.59
		3	Lowest	1852.4	20.38
			Middle	1880.0	20.27
			Highest	1907.6	20.60
		4	Lowest	1852.4	19.47
			Middle	1880.0	19.31
			Highest	1907.6	19.57
		5	Lowest	1852.4	21.31
			Middle	1880.0	21.23
			Highest	1907.6	21.48

©2014 A Test Lab Techno Corp.

Band	Modulation	Sub-test	CH	Frequency (MHz)	Burst Average Power (dBm)
WCDMA Band IV	RMC12.2K	---	Lowest	1712.4	23.15
			Middle	1732.6	23.30
			Highest	1752.6	**23.37**
HSDPA Band IV	QPSK	1	Lowest	1712.4	22.30
			Middle	1732.6	22.51
			Highest	1752.6	22.48
		2	Lowest	1712.4	22.29
			Middle	1732.6	22.48
			Highest	1752.6	22.47
		3	Lowest	1712.4	21.82
			Middle	1732.6	22.06
			Highest	1752.6	22.03
		4	Lowest	1712.4	21.80
			Middle	1732.6	22.03
			Highest	1752.6	22.01
HSUPA Band IV	QPSK	1	Lowest	1712.4	21.80
			Middle	1732.6	22.01
			Highest	1752.6	21.98
		2	Lowest	1712.4	19.86
			Middle	1732.6	20.06
			Highest	1752.6	20.02
		3	Lowest	1712.4	20.83
			Middle	1732.6	21.03
			Highest	1752.6	20.99
		4	Lowest	1712.4	19.83
			Middle	1732.6	20.03
			Highest	1752.6	20.00
		5	Lowest	1712.4	21.76
			Middle	1732.6	21.96
			Highest	1752.6	21.95

©2014 A Test Lab Techno Corp.

Band	Modulation	Sub-test	CH	Frequency (MHz)	Burst Average Power (dBm)
WCDMA Band V	RMC12.2K	---	Lowest	826.4	**23.41**
			Middle	836.6	23.22
			Highest	846.6	23.13
HSDPA Band V	QPSK	1	Lowest	826.4	22.56
			Middle	836.6	22.32
			Highest	846.6	22.27
		2	Lowest	826.4	22.53
			Middle	836.6	22.28
			Highest	846.6	22.22
		3	Lowest	826.4	22.08
			Middle	836.6	21.83
			Highest	846.6	21.77
		4	Lowest	826.4	22.04
			Middle	836.6	21.79
			Highest	846.6	21.76
HSUPA Band V	QPSK	1	Lowest	826.4	22.02
			Middle	836.6	21.83
			Highest	846.6	21.77
		2	Lowest	826.4	20.04
			Middle	836.6	19.84
			Highest	846.6	19.76
		3	Lowest	826.4	21.04
			Middle	836.6	20.86
			Highest	846.6	20.77
		4	Lowest	826.4	20.00
			Middle	836.6	19.82
			Highest	846.6	19.74
		5	Lowest	826.4	22.00
			Middle	836.6	21.80
			Highest	846.6	21.73

©2014 A Test Lab Techno Corp.

Band	Channel Bandwidth	Modulation	Channel	Frequency (MHz)	RB Configuration		Burst Average Power (dBm)
					Size	Offset	
LTE Band 2	1.4 MHz	QPSK	18607	1850.7	1	0	23.01
					1	3	23.00
					1	5	23.06
					3	0	23.07
					3	2	23.05
					3	3	23.04
					6	0	22.09
			18900	1880.0	1	0	23.23
					1	3	23.20
					1	5	23.25
					3	0	23.28
					3	2	23.25
					3	3	23.22
					6	0	22.27
			19193	1909.3	1	0	23.41
					1	3	23.40
					1	5	23.41
					3	0	**23.47**
					3	2	23.40
					3	3	23.42
					6	0	22.48
		16QAM	18607	1850.7	1	0	21.99
					1	3	21.94
					1	5	22.06
					3	0	22.01
					3	2	22.00
					3	3	21.99
					6	0	21.87
			18900	1880.0	1	0	22.16
					1	3	22.15
					1	5	22.18
					3	0	22.19
					3	2	22.16
					3	3	22.21
					6	0	22.19
			19193	1909.3	1	0	22.36
					1	3	22.34
					1	5	22.36
					3	0	22.36
					3	2	22.38
					3	3	22.40
					6	0	22.37

©2014 A Test Lab Techno Corp.

Band	Channel Bandwidth	Modulation	Channel	Frequency (MHz)	RB Configuration		Burst Average Power (dBm)
					Size	Offset	
LTE Band 2	3MHz	QPSK	18615	1851.5	1	0	22.93
					1	8	22.93
					1	14	22.95
					8	0	21.93
					8	4	21.93
					8	7	21.96
					15	0	21.95
			18900	1880.0	1	0	23.07
					1	8	23.09
					1	14	23.12
					8	0	22.15
					8	4	22.19
					8	7	22.15
					15	0	22.14
			19185	1908.5	1	0	23.30
					1	8	23.31
					1	14	23.36
					8	0	22.33
					8	4	22.30
					8	7	22.36
					15	0	22.39
		16QAM	18615	1851.5	1	0	21.92
					1	8	21.89
					1	14	21.89
					8	0	20.96
					8	4	20.99
					8	7	20.94
					15	0	20.90
			18900	1880.0	1	0	22.05
					1	8	22.10
					1	14	22.10
					8	0	21.15
					8	4	21.14
					8	7	21.17
					15	0	21.13
			19185	1908.5	1	0	22.24
					1	8	22.17
					1	14	22.29
					8	0	21.30
					8	4	21.30
					8	7	21.33
					15	0	21.27

©2014 A Test Lab Techno Corp.

Band	Channel Bandwidth	Modulation	Channel	Frequency (MHz)	RB Configuration		Burst Average Power (dBm)
					Size	Offset	
LTE Band 2	5MHz	QPSK	18625	1852.5	1	0	22.89
					1	13	22.92
					1	24	22.92
					12	0	21.97
					12	6	21.94
					12	13	21.96
					25	0	21.98
			18900	1880.0	1	0	23.19
					1	13	23.07
					1	24	23.11
					12	0	22.15
					12	6	22.13
					12	13	22.16
					25	0	22.19
			19175	1907.5	1	0	23.28
					1	13	23.26
					1	24	23.34
					12	0	22.33
					12	6	22.33
					12	13	22.37
					25	0	22.33
		16QAM	18625	1852.5	1	0	21.86
					1	13	21.80
					1	24	21.84
					12	0	20.94
					12	6	20.92
					12	13	20.92
					25	0	20.94
			18900	1880.0	1	0	22.08
					1	13	22.05
					1	24	22.05
					12	0	21.13
					12	6	21.14
					12	13	21.14
					25	0	21.12
			19175	1907.5	1	0	22.24
					1	13	22.22
					1	24	22.28
					12	0	21.31
					12	6	21.31
					12	13	21.32
					25	0	21.31

©2014 A Test Lab Techno Corp.

Band	Channel Bandwidth	Modulation	Channel	Frequency (MHz)	RB Configuration		Burst Average Power (dBm)
					Size	Offset	
LTE Band 2	10MHz	QPSK	18650	1855.0	1	0	22.92
					1	25	22.90
					1	49	23.05
					25	0	21.95
					25	13	21.91
					25	25	21.96
					50	0	21.98
			18900	1880.0	1	0	23.15
					1	25	23.10
					1	49	23.09
					25	0	22.12
					25	13	22.14
					25	25	22.20
					50	0	22.17
			19150	1905.0	1	0	23.28
					1	25	23.26
					1	49	23.35
					25	0	22.30
					25	13	22.34
					25	25	22.35
					50	0	22.32
		16QAM	18650	1855.0	1	0	21.88
					1	25	21.85
					1	49	21.97
					25	0	20.92
					25	13	20.94
					25	25	20.90
					50	0	20.89
			18900	1880.0	1	0	22.09
					1	25	22.06
					1	49	22.02
					25	0	21.11
					25	13	21.14
					25	25	21.19
					50	0	21.07
			19150	1905.0	1	0	22.23
					1	25	22.27
					1	49	22.27
					25	0	21.28
					25	13	21.32
					25	25	21.31
					50	0	21.26

©2014 A Test Lab Techno Corp.

Band	Channel Bandwidth	Modulation	Channel	Frequency (MHz)	RB Configuration		Burst Average Power (dBm)
					Size	Offset	
LTE Band 2	15MHz	QPSK	18675	1857.5	1	0	22.94
					1	38	22.95
					1	74	23.06
					38	0	21.92
					38	18	21.92
					38	37	22.06
					75	0	21.95
			18900	1880	1	0	23.15
					1	38	23.09
					1	74	23.12
					38	0	22.12
					38	18	22.10
					38	37	22.19
					75	0	22.19
			19125	1902.5	1	0	23.15
					1	38	23.32
					1	74	23.37
					38	0	22.31
					38	18	22.30
					38	37	22.34
					75	0	22.40
		16QAM	18675	1857.5	1	0	21.89
					1	38	21.89
					1	74	21.95
					38	0	20.90
					38	18	20.85
					38	37	20.94
					75	0	20.91
			18900	1880	1	0	22.12
					1	38	22.06
					1	74	22.03
					38	0	21.00
					38	18	21.08
					38	37	21.10
					75	0	21.11
			19125	1902.5	1	0	22.10
					1	38	22.25
					1	74	22.30
					38	0	21.26
					38	18	21.27
					38	37	21.28
					75	0	21.34

©2014 A Test Lab Techno Corp.

Band	Channel Bandwidth	Modulation	Channel	Frequency (MHz)	RB Configuration		Burst Average Power (dBm)
					Size	Offset	
LTE Band 2	20MHz	QPSK	18700	1860	1	0	23.02
					1	50	22.94
					1	99	22.91
					50	0	22.10
					50	25	21.95
					50	50	22.05
					100	0	22.08
			18900	1880	1	0	23.13
					1	50	23.08
					1	99	23.12
					50	0	22.25
					50	25	22.19
					50	50	22.19
					100	0	22.21
			19100	1900	1	0	23.37
					1	50	23.32
					1	99	22.99
					50	0	22.38
					50	25	22.37
					50	50	22.21
					100	0	22.37
		16QAM	18700	1860	1	0	21.92
					1	50	22.00
					1	99	21.93
					50	0	20.89
					50	25	20.98
					50	50	20.98
					100	0	21.07
			18900	1880	1	0	22.08
					1	50	22.05
					1	99	22.07
					50	0	21.10
					50	25	21.10
					50	50	21.17
					100	0	21.13
			19100	1900	1	0	22.01
					1	50	22.28
					1	99	22.29
					50	0	21.13
					50	25	21.30
					50	50	21.30
					100	0	21.34

©2014 A Test Lab Techno Corp.

Band	Channel Bandwidth	Modulation	Channel	Frequency (MHz)	RB Configuration		Burst Average Power (dBm)
					Size	Offset	
LTE Band 4	1.4MHz	QPSK	19957	1710.7	1	0	23.49
					1	3	23.42
					1	5	23.48
					3	0	23.46
					3	2	23.44
					3	3	23.43
					6	0	22.51
			20175	1732.5	1	0	23.48
					1	3	23.45
					1	5	23.50
					3	0	23.46
					3	2	23.47
					3	3	23.48
					6	0	22.54
			20393	1754.3	1	0	23.40
					1	3	23.39
					1	5	23.43
					3	0	23.44
					3	2	23.44
					3	3	23.44
					6	0	22.47
		16QAM	19957	1710.7	1	0	22.42
					1	3	22.45
					1	5	22.41
					3	0	22.45
					3	2	22.43
					3	3	22.49
					6	0	21.38
			20175	1732.5	1	0	22.44
					1	3	22.46
					1	5	22.42
					3	0	22.47
					3	2	22.46
					3	3	22.45
					6	0	21.38
			20393	1754.3	1	0	22.35
					1	3	22.37
					1	5	22.34
					3	0	22.36
					3	2	22.33
					3	3	22.42
					6	0	21.36

©2014 A Test Lab Techno Corp.

Band	Channel Bandwidth	Modulation	Channel	Frequency (MHz)	RB Configuration		Burst Average Power (dBm)
					Size	Offset	
LTE Band 4	3MHz	QPSK	19965	1711.5	1	0	23.43
					1	8	23.47
					1	14	23.42
					8	0	22.48
					8	4	22.44
					8	7	22.48
					15	0	22.51
			20175	1732.5	1	0	23.43
					1	8	23.42
					1	14	23.42
					8	0	22.51
					8	4	22.46
					8	7	22.47
					15	0	22.47
			20385	1753.5	1	0	23.45
					1	8	23.32
					1	14	23.38
					8	0	22.51
					8	4	22.41
					8	7	22.42
					15	0	22.45
		16QAM	19965	1711.5	1	0	22.42
					1	8	22.36
					1	14	22.43
					8	0	21.48
					8	4	21.51
					8	7	21.48
					15	0	21.45
			20175	1732.5	1	0	22.40
					1	8	22.42
					1	14	22.39
					8	0	21.49
					8	4	21.51
					8	7	21.47
					15	0	21.45
			20385	1753.5	1	0	22.38
					1	8	22.30
					1	14	22.33
					8	0	21.49
					8	4	21.45
					8	7	21.41
					15	0	21.37

©2014 A Test Lab Techno Corp.

Band	Channel Bandwidth	Modulation	Channel	Frequency (MHz)	RB Configuration		Burst Average Power (dBm)
					Size	Offset	
LTE Band 4	5MHz	QPSK	19975	1712.5	1	0	23.50
					1	13	23.48
					1	24	23.52
					12	0	22.59
					12	6	22.55
					12	13	22.53
					25	0	22.53
			20175	1732.5	1	0	23.51
					1	13	23.50
					1	24	23.55
					12	0	22.57
					12	6	22.58
					12	13	22.56
					25	0	22.55
			20375	1752.5	1	0	23.48
					1	13	23.53
					1	24	23.46
					12	0	22.57
					12	6	22.58
					12	13	22.49
					25	0	22.47
		16QAM	19975	1712.5	1	0	22.50
					1	13	22.50
					1	24	22.48
					12	0	21.58
					12	6	21.56
					12	13	21.58
					25	0	21.55
			20175	1732.5	1	0	22.52
					1	13	22.46
					1	24	22.57
					12	0	21.58
					12	6	21.58
					12	13	21.58
					25	0	21.55
			20375	1752.5	1	0	22.47
					1	13	22.48
					1	24	22.39
					12	0	21.58
					12	6	21.59
					12	13	21.51
					25	0	21.51

©2014 A Test Lab Techno Corp.

Band	Channel Bandwidth	Modulation	Channel	Frequency (MHz)	RB Configuration		Burst Average Power (dBm)
					Size	Offset	
LTE Band 4	10MHz	QPSK	20000	1715.0	1	0	23.52
					1	25	23.48
					1	49	23.46
					25	0	22.56
					25	13	22.57
					25	25	22.52
					50	0	22.67
			20175	1732.5	1	0	23.58
					1	25	23.50
					1	49	23.56
					25	0	22.57
					25	13	22.54
					25	25	22.54
					50	0	22.68
			20350	1750.0	1	0	23.52
					1	25	23.50
					1	49	23.49
					25	0	22.51
					25	13	22.57
					25	25	22.56
					50	0	22.65
		16QAM	20000	1715.0	1	0	22.52
					1	25	22.46
					1	49	22.47
					25	0	21.60
					25	13	21.59
					25	25	21.52
					50	0	21.56
			20175	1732.5	1	0	22.49
					1	25	22.52
					1	49	22.63
					25	0	21.55
					25	13	21.57
					25	25	21.56
					50	0	21.60
			20350	1750.0	1	0	22.52
					1	25	22.46
					1	49	22.42
					25	0	21.59
					25	13	21.57
					25	25	21.61
					50	0	21.57

©2014 A Test Lab Techno Corp.

Band	Channel Bandwidth	Modulation	Channel	Frequency (MHz)	RB Configuration		Burst Average Power (dBm)
					Size	Offset	
LTE Band 4	15MHz	QPSK	20025	1717.5	1	0	23.56
					1	38	23.49
					1	74	23.48
					38	0	22.57
					38	18	22.54
					38	37	22.52
					75	0	22.62
			20175	1732.5	1	0	23.54
					1	38	23.53
					1	74	23.50
					38	0	22.59
					38	18	22.62
					38	37	22.62
					75	0	22.67
			20325	1747.5	1	0	23.58
					1	38	23.46
					1	74	23.46
					38	0	22.56
					38	18	22.51
					38	37	22.54
					75	0	22.59
		16QAM	20025	1717.5	1	0	22.58
					1	38	22.48
					1	74	22.48
					38	0	21.57
					38	18	21.53
					38	37	21.46
					75	0	21.56
			20175	1732.5	1	0	22.49
					1	38	22.51
					1	74	22.43
					38	0	21.56
					38	18	21.55
					38	37	21.58
					75	0	21.63
			20325	1747.5	1	0	22.62
					1	38	22.43
					1	74	22.42
					38	0	21.54
					38	18	21.48
					38	37	21.50
					75	0	21.53

©2014 A Test Lab Techno Corp.

Band	Channel Bandwidth	Modulation	Channel	Frequency (MHz)	RB Configuration		Burst Average Power (dBm)
					Size	Offset	
LTE Band 4	20MHz	QPSK	20050	1720.0	1	0	23.60
					1	50	23.47
					1	99	23.49
					50	0	22.64
					50	25	22.60
					50	50	22.57
					100	0	22.66
			20175	1732.5	1	0	23.54
					1	50	23.51
					1	99	23.45
					50	0	22.70
					50	25	22.62
					50	50	22.66
					100	0	22.67
			20300	1745.0	1	0	**23.64**
					1	50	23.51
					1	99	23.43
					50	0	22.74
					50	25	22.61
					50	50	22.57
					100	0	22.71
		16QAM	20050	1720.0	1	0	22.55
					1	50	22.44
					1	99	22.43
					50	0	21.55
					50	25	21.56
					50	50	21.51
					100	0	21.58
			20175	1732.5	1	0	22.52
					1	50	22.51
					1	99	22.47
					50	0	21.61
					50	25	21.57
					50	50	21.66
					100	0	21.66
			20300	1745.0	1	0	22.62
					1	50	22.49
					1	99	22.43
					50	0	21.64
					50	25	21.58
					50	50	21.56
					100	0	21.66

©2014 A Test Lab Techno Corp.

Band	Channel Bandwidth	Modulation	Channel	Frequency (MHz)	RB Configuration		Burst Average Power (dBm)
					Size	Offset	
LTE Band 5	1.4MHz	QPSK	20407	824.7	1	0	22.67
					1	3	22.65
					1	5	22.68
					3	0	22.69
					3	2	22.70
					3	3	22.65
					6	0	21.73
			20525	836.5	1	0	22.43
					1	3	22.41
					1	5	22.41
					3	0	22.46
					3	2	22.39
					3	3	22.39
					6	0	21.48
			20643	848.3	1	0	22.36
					1	3	22.35
					1	5	22.38
					3	0	22.37
					3	2	22.34
					3	3	22.35
					6	0	21.39
		16QAM	20407	824.7	1	0	21.65
					1	3	21.62
					1	5	21.61
					3	0	21.64
					3	2	21.60
					3	3	21.62
					6	0	20.52
			20525	836.5	1	0	21.38
					1	3	21.33
					1	5	21.38
					3	0	21.39
					3	2	21.41
					3	3	21.39
					6	0	20.33
			20643	848.3	1	0	21.35
					1	3	21.28
					1	5	21.31
					3	0	21.35
					3	2	21.36
					3	3	21.35
					6	0	20.26

©2014 A Test Lab Techno Corp.

Band	Channel Bandwidth	Modulation	Channel	Frequency (MHz)	RB Configuration		Burst Average Power (dBm)
					Size	Offset	
LTE Band 5	3MHz	QPSK	20415	825.5	1	0	**22.88**
					1	8	22.86
					1	14	22.84
					8	0	21.67
					8	4	21.62
					8	7	21.66
					15	0	21.64
			20525	836.5	1	0	22.64
					1	8	22.63
					1	14	22.63
					8	0	21.44
					8	4	21.38
					8	7	21.41
					15	0	21.38
			20635	847.5	1	0	22.55
					1	8	22.42
					1	14	22.54
					8	0	21.39
					8	4	21.35
					8	7	21.37
					15	0	21.41
		16QAM	20415	825.5	1	0	21.58
					1	8	21.48
					1	14	21.56
					8	0	20.64
					8	4	20.61
					8	7	20.61
					15	0	20.56
			20525	836.5	1	0	21.31
					1	8	21.29
					1	14	21.31
					8	0	20.39
					8	4	20.44
					8	7	20.38
					15	0	20.37
			20635	847.5	1	0	21.23
					1	8	21.26
					1	14	21.31
					8	0	20.39
					8	4	20.36
					8	7	20.35
					15	0	20.31

©2014 A Test Lab Techno Corp.

Band	Channel Bandwidth	Modulation	Channel	Frequency (MHz)	RB Configuration		Burst Average Power (dBm)
					Size	Offset	
LTE Band 5	5MHz	QPSK	20425	826.5	1	0	22.81
					1	13	22.80
					1	24	22.72
					12	0	21.62
					12	6	21.59
					12	13	21.61
					25	0	21.61
			20525	836.5	1	0	22.61
					1	13	22.59
					1	24	22.54
					12	0	21.43
					12	6	21.42
					12	13	21.41
					25	0	21.37
			20625	846.5	1	0	22.58
					1	13	22.42
					1	24	22.43
					12	0	21.33
					12	6	21.28
					12	13	21.25
					25	0	21.35
		16QAM	20425	826.5	1	0	21.55
					1	13	21.49
					1	24	21.43
					12	0	20.63
					12	6	20.61
					12	13	20.62
					25	0	20.64
			20525	836.5	1	0	21.34
					1	13	21.29
					1	24	21.28
					12	0	20.40
					12	6	20.38
					12	13	20.38
					25	0	20.36
			20625	846.5	1	0	21.16
					1	13	21.13
					1	24	21.28
					12	0	20.27
					12	6	20.25
					12	13	20.35
					25	0	20.34

©2014 A Test Lab Techno Corp.

Band	Channel Bandwidth	Modulation	Channel	Frequency (MHz)	RB Configuration		Burst Average Power (dBm)
					Size	Offset	
LTE Band 5	10MHz	QPSK	20450	829.0	1	0	22.77
					1	25	22.68
					1	49	22.59
					25	0	21.67
					25	13	21.56
					25	25	21.53
					50	0	21.52
			20525	836.5	1	0	22.67
					1	25	22.57
					1	49	22.52
					25	0	21.43
					25	13	21.37
					25	25	21.36
					50	0	21.42
			20600	844.0	1	0	22.55
					1	25	22.43
					1	49	22.54
					25	0	21.40
					25	13	21.24
					25	25	21.38
					50	0	21.44
		16QAM	20450	829.0	1	0	21.53
					1	25	21.42
					1	49	21.37
					25	0	20.62
					25	13	20.51
					25	25	20.50
					50	0	20.49
			20525	836.5	1	0	21.48
					1	25	21.32
					1	49	21.28
					25	0	20.39
					25	13	20.39
					25	25	20.40
					50	0	20.38
			20600	844.0	1	0	21.33
					1	25	21.16
					1	49	21.31
					25	0	20.37
					25	13	20.24
					25	25	20.36
					50	0	20.37

©2014 A Test Lab Techno Corp.

Band	Channel Bandwidth	Modulation	Channel	Frequency (MHz)	RB Configuration		Burst Average Power (dBm)
					Size	Offset	
LTE Band 7	5MHz	QPSK	20775	2502.5	1	0	22.96
					1	13	22.97
					1	24	22.95
					12	0	22.02
					12	6	22.04
					12	13	22.02
					25	0	21.99
			21100	2535.0	1	0	22.88
					1	13	22.97
					1	24	22.97
					12	0	22.01
					12	6	21.98
					12	13	21.98
					25	0	21.94
			21425	2567.5	1	0	22.97
					1	13	22.94
					1	24	22.97
					12	0	21.91
					12	6	21.96
					12	13	21.92
					25	0	21.89
		16QAM	20775	2502.5	1	0	21.90
					1	13	21.91
					1	24	21.88
					12	0	21.01
					12	6	21.04
					12	13	21.03
					25	0	21.03
			21100	2535.0	1	0	21.79
					1	13	21.92
					1	24	21.89
					12	0	21.06
					12	6	21.03
					12	13	21.04
					25	0	21.01
			21425	2567.5	1	0	21.89
					1	13	21.86
					1	24	21.83
					12	0	21.05
					12	6	21.04
					12	13	21.01
					25	0	21.03

©2014 A Test Lab Techno Corp.

Band	Channel Bandwidth	Modulation	Channel	Frequency (MHz)	RB Configuration		Burst Average Power (dBm)
					Size	Offset	
LTE Band 7	10MHz	QPSK	20800	2505.0	1	0	22.89
					1	25	22.83
					1	49	22.86
					25	0	21.89
					25	13	21.88
					25	25	21.81
					50	0	21.80
			21100	2535.0	1	0	22.77
					1	25	22.87
					1	49	22.88
					25	0	21.88
					25	13	21.88
					25	25	21.88
					50	0	21.90
			21400	2565.0	1	0	22.86
					1	25	22.87
					1	49	22.82
					25	0	21.85
					25	13	21.85
					25	25	21.83
					50	0	21.82
		16QAM	20800	2505.0	1	0	21.81
					1	25	21.73
					1	49	21.77
					25	0	20.90
					25	13	20.91
					25	25	20.84
					50	0	20.83
			21100	2535.0	1	0	21.72
					1	25	21.81
					1	49	21.84
					25	0	20.94
					25	13	20.90
					25	25	20.94
					50	0	20.90
			21400	2565.0	1	0	21.80
					1	25	21.82
					1	49	21.79
					25	0	21.00
					25	13	21.01
					25	25	20.95
					50	0	20.90

©2014 A Test Lab Techno Corp.

Band	Channel Bandwidth	Modulation	Channel	Frequency (MHz)	RB Configuration		Burst Average Power (dBm)
					Size	Offset	
LTE Band 7	15MHz	QPSK	20825	2507.5	1	0	22.94
					1	38	22.95
					1	74	22.96
					38	0	21.93
					38	18	21.82
					38	37	21.95
					75	0	21.89
			21100	2535.0	1	0	22.77
					1	38	22.94
					1	74	22.96
					38	0	21.82
					38	18	21.94
					38	37	21.95
					75	0	22.00
			21375	2562.5	1	0	22.88
					1	38	22.96
					1	74	22.94
					38	0	21.88
					38	18	21.92
					38	37	21.95
					75	0	21.98
		16QAM	20825	2507.5	1	0	21.85
					1	38	21.85
					1	74	21.91
					38	0	20.92
					38	18	20.83
					38	37	20.99
					75	0	20.91
			21100	2535.0	1	0	21.73
					1	38	21.85
					1	74	21.96
					38	0	20.87
					38	18	20.99
					38	37	21.02
					75	0	20.97
			21375	2562.5	1	0	21.83
					1	38	21.91
					1	74	21.90
					38	0	20.99
					38	18	21.01
					38	37	21.00
					75	0	21.03

©2014 A Test Lab Techno Corp.

Band	Channel Bandwidth	Modulation	Channel	Frequency (MHz)	RB Configuration		Burst Average Power (dBm)
					Size	Offset	
LTE Band 7	20MHz	QPSK	20850	2510.0	1	0	22.98
					1	50	22.92
					1	99	22.89
					50	0	21.86
					50	25	21.79
					50	50	21.78
					100	0	21.85
			21100	2535.0	1	0	22.96
					1	50	22.87
					1	99	22.75
					50	0	21.89
					50	25	21.78
					50	50	21.75
					100	0	21.87
			21350	2560.0	1	0	22.89
					1	50	22.76
					1	99	22.88
					50	0	21.85
					50	25	21.84
					50	50	21.73
					100	0	21.84
		16QAM	20850	2510.0	1	0	21.77
					1	50	21.85
					1	99	21.92
					50	0	20.83
					50	25	20.82
					50	50	20.96
					100	0	20.94
			21100	2535.0	1	0	21.63
					1	50	21.81
					1	99	21.90
					50	0	20.84
					50	25	20.89
					50	50	20.96
					100	0	20.93
			21350	2560.0	1	0	21.73
					1	50	21.82
					1	99	21.77
					50	0	20.84
					50	25	20.91
					50	50	20.94
					100	0	20.91

©2014 A Test Lab Techno Corp.

Band	Channel Bandwidth	Modulation	Channel	Frequency (MHz)	RB Configuration		Burst Average Power (dBm)
					Size	Offset	
LTE Band 12	1.4MHz	QPSK	23017	699.7	1	0	22.80
					1	3	22.76
					1	5	22.79
					3	0	22.75
					3	2	22.74
					3	3	22.77
					6	0	21.79
			23095	707.5	1	0	22.82
					1	3	22.80
					1	5	22.83
					3	0	22.84
					3	2	22.85
					3	3	22.80
					6	0	21.85
			23173	715.3	1	0	22.87
					1	3	22.86
					1	5	22.87
					3	0	22.88
					3	2	22.85
					3	3	22.94
					6	0	21.90
		16QAM	23017	699.7	1	0	21.70
					1	3	21.70
					1	5	21.76
					3	0	21.73
					3	2	21.71
					3	3	21.75
					6	0	20.67
			23095	707.5	1	0	21.77
					1	3	21.75
					1	5	21.73
					3	0	21.79
					3	2	21.77
					3	3	21.77
					6	0	20.66
			23173	715.3	1	0	21.83
					1	3	21.79
					1	5	21.82
					3	0	21.83
					3	2	21.84
					3	3	21.84
					6	0	20.73

©2014 A Test Lab Techno Corp.

Band	Channel Bandwidth	Modulation	Channel	Frequency (MHz)	RB Configuration		Burst Average Power (dBm)
					Size	Offset	
LTE Band 12	3MHz	QPSK	23025	700.5	1	0	22.69
					1	8	22.74
					1	14	22.80
					8	0	21.75
					8	4	21.78
					8	7	21.78
					15	0	21.79
			23095	707.5	1	0	22.70
					1	8	22.77
					1	14	22.78
					8	0	21.80
					8	4	21.81
					8	7	21.77
					15	0	21.80
			23165	714.5	1	0	22.79
					1	8	22.78
					1	14	22.86
					8	0	21.87
					8	4	21.82
					8	7	21.88
					15	0	21.83
		16QAM	23025	700.5	1	0	21.64
					1	8	21.70
					1	14	21.79
					8	0	20.74
					8	4	20.78
					8	7	20.76
					15	0	20.73
			23095	707.5	1	0	21.63
					1	8	21.71
					1	14	21.73
					8	0	20.75
					8	4	20.79
					8	7	20.80
					15	0	20.77
			23165	714.5	1	0	21.72
					1	8	21.76
					1	14	21.79
					8	0	20.81
					8	4	20.82
					8	7	20.86
					15	0	20.78

©2014 A Test Lab Techno Corp.

Band	Channel Bandwidth	Modulation	Channel	Frequency (MHz)	RB Configuration		Burst Average Power (dBm)
					Size	Offset	
LTE Band 12	5MHz	QPSK	23035	701.5	1	0	22.64
					1	13	22.73
					1	24	22.77
					12	0	21.70
					12	6	21.73
					12	13	21.77
					25	0	21.76
			23095	707.5	1	0	22.61
					1	13	22.72
					1	24	22.72
					12	0	21.79
					12	6	21.74
					12	13	21.78
					25	0	21.81
			23155	713.5	1	0	22.74
					1	13	22.79
					1	24	22.86
					12	0	21.83
					12	6	21.81
					12	13	21.82
					25	0	21.82
		16QAM	23035	701.5	1	0	21.63
					1	13	21.68
					1	24	21.71
					12	0	20.71
					12	6	20.74
					12	13	20.75
					25	0	20.76
			23095	707.5	1	0	21.59
					1	13	21.67
					1	24	21.67
					12	0	20.77
					12	6	20.74
					12	13	20.74
					25	0	20.76
			23155	713.5	1	0	21.70
					1	13	21.71
					1	24	21.78
					12	0	20.78
					12	6	20.78
					12	13	20.82
					25	0	20.78

©2014 A Test Lab Techno Corp.

Band	Channel Bandwidth	Modulation	Channel	Frequency (MHz)	RB Configuration		Burst Average Power (dBm)
					Size	Offset	
LTE Band 12	10MHz	QPSK	23060	704.0	1	0	22.84
					1	25	22.73
					1	49	22.67
					25	0	21.83
					25	13	21.76
					25	25	21.77
					50	0	21.78
			23095	707.5	1	0	22.87
					1	25	22.63
					1	49	22.75
					25	0	21.79
					25	13	21.64
					25	25	21.75
					50	0	21.76
			23130	711.0	1	0	22.86
					1	25	22.74
					1	49	22.76
					25	0	21.84
					25	13	21.71
					25	25	21.75
					50	0	21.73
		16QAM	23060	704.0	1	0	21.61
					1	25	21.68
					1	49	21.76
					25	0	20.74
					25	13	20.76
					25	25	20.82
					50	0	20.67
			23095	707.5	1	0	21.62
					1	25	21.69
					1	49	21.83
					25	0	20.66
					25	13	20.76
					25	25	20.76
					50	0	20.69
			23130	711.0	1	0	21.66
					1	25	21.72
					1	49	21.85
					25	0	20.69
					25	13	20.67
					25	25	20.84
					50	0	20.67

©2014 A Test Lab Techno Corp.

Band	Channel Bandwidth	Modulation	Channel	Frequency (MHz)	RB Configuration		Burst Average Power (dBm)
					Size	Offset	
LTE Band 13	5MHz	QPSK	23205	779.5	1	0	22.81
					1	13	22.80
					1	24	22.88
					12	0	21.85
					12	6	21.84
					12	13	21.92
					25	0	21.84
			23230	782.0	1	0	22.80
					1	13	22.83
					1	24	22.86
					12	0	21.88
					12	6	21.89
					12	13	21.86
					25	0	21.90
			23255	784.5	1	0	22.85
					1	13	22.86
					1	24	**22.96**
					12	0	21.92
					12	6	21.91
					12	13	21.89
					25	0	21.93
		16QAM	23205	779.5	1	0	21.78
					1	13	21.76
					1	24	21.83
					12	0	20.87
					12	6	20.83
					12	13	20.89
					25	0	20.81
			23230	782.0	1	0	21.75
					1	13	21.79
					1	24	21.81
					12	0	20.91
					12	6	20.89
					12	13	20.87
					25	0	20.88
			23255	784.5	1	0	21.83
					1	13	21.80
					1	24	21.90
					12	0	20.89
					12	6	20.85
					12	13	20.87
					25	0	20.87

©2014 A Test Lab Techno Corp.

Band	Channel Bandwidth	Modulation	Channel	Frequency (MHz)	RB Configuration		Burst Average Power (dBm)
					Size	Offset	
LTE Band 13	10MHz	QPSK	23230	782.0	1	0	22.93
					1	25	22.85
					1	49	22.80
					25	0	21.94
					25	13	21.93
					25	25	21.89
					50	0	21.91
		16QAM	23230	782.0	1	0	21.80
					1	25	21.83
					1	49	21.94
					25	0	20.91
					25	13	20.90
					25	25	20.87
					50	0	20.83

©2014 A Test Lab Techno Corp.

Band	Channel Bandwidth	Modulation	Channel	Frequency (MHz)	RB Configuration		Burst Average Power (dBm)
					Size	Offset	
LTE Band 17	5MHz	QPSK	23755	706.5	1	0	22.63
					1	13	22.62
					1	24	22.76
					12	0	21.75
					12	6	21.71
					12	13	21.81
					25	0	21.80
			23790	710.0	1	0	22.60
					1	13	22.67
					1	24	22.79
					12	0	21.75
					12	6	21.69
					12	13	21.71
					25	0	21.70
			23825	713.5	1	0	22.73
					1	13	22.69
					1	24	22.77
					12	0	21.80
					12	6	21.76
					12	13	21.80
					25	0	21.75
		16QAM	23755	706.5	1	0	21.57
					1	13	21.59
					1	24	21.70
					12	0	20.76
					12	6	20.69
					12	13	20.78
					25	0	20.77
			23790	710.0	1	0	21.55
					1	13	21.62
					1	24	21.73
					12	0	20.70
					12	6	20.70
					12	13	20.69
					25	0	20.69
			23825	713.5	1	0	21.67
					1	13	21.71
					1	24	21.66
					12	0	20.76
					12	6	20.73
					12	13	20.77
					25	0	20.73

©2014 A Test Lab Techno Corp.

Band	Channel Bandwidth	Modulation	Channel	Frequency (MHz)	RB Configuration		Burst Average Power (dBm)
					Size	Offset	
LTE Band 17	10MHz	QPSK	23780	709.0	1	0	**22.81**
					1	25	22.69
					1	49	22.72
					25	0	21.76
					25	13	21.73
					25	25	21.70
					50	0	21.78
			23790	710.0	1	0	22.78
					1	25	22.67
					1	49	22.63
					25	0	21.82
					25	13	21.70
					25	25	21.74
					50	0	21.74
			23800	711.0	1	0	22.77
					1	25	22.74
					1	49	22.57
					25	0	21.76
					25	13	21.65
					25	25	21.73
					50	0	21.68
		16QAM	23780	709.0	1	0	21.66
					1	25	21.66
					1	49	21.76
					25	0	20.75
					25	13	20.74
					25	25	20.71
					50	0	20.69
			23790	710.0	1	0	21.54
					1	25	21.61
					1	49	21.72
					25	0	20.69
					25	13	20.67
					25	25	20.77
					50	0	20.69
			23800	711.0	1	0	21.50
					1	25	21.68
					1	49	21.74
					25	0	20.67
					25	13	20.70
					25	25	20.74
					50	0	20.64

©2014 A Test Lab Techno Corp.

Band	Data Rate	CH	Frequency (MHz)	Average Power (dBm)		
				ANT 1	ANT 2	ANT 1+2
IEEE 802.11b	1 M	1	2412.0	6.81	7.46	10.16
		6	2437.0	6.75	7.28	10.03
		11	2462.0	7.14	6.98	10.07
IEEE 802.11g	6 M	1	2412.0	7.97	7.87	10.93
		6	2437.0	7.67	8.38	11.05
		11	2462.0	7.73	7.84	10.80
IEEE 802.11n 20MHz (2.4 GHz)	13 M	1	2412.0	7.89	8.12	11.02
		6	2437.0	7.78	8.49	11.16
		11	2462.0	7.59	7.86	10.74
IEEE 802.11n 40MHz (2.4 GHz)	27 M	3	2422.0	8.38	8.07	11.24
		6	2437.0	8.59	8.77	**11.69**
		9	2452.0	7.83	7.73	10.79

Band	Data Rate	CH	Frequency (MHz)	Average Power (dBm)		
				ANT 1	ANT 2	ANT 1+2
IEEE 802.11a	6 M	36	5180.0	8.16	8.43	11.31
		40	5200.0	8.29	8.77	11.55
		44	5220.0	8.65	8.72	**11.70**
		149	5745.0	7.98	7.89	10.95
		153	5765.0	8.04	7.86	**10.96**
		157	5785.0	7.89	7.82	10.87
		161	5805.0	7.76	8.07	10.93
		165	5825.0	7.82	7.92	10.88
	54 M	36	5180.0	7.93	8.50	11.23
		40	5200.0	7.84	8.34	11.11
		44	5220.0	8.04	8.16	11.11
		149	5745.0	7.73	7.72	10.74
		153	5765.0	7.84	7.58	10.72
		157	5785.0	7.78	7.88	10.84
		161	5805.0	7.68	8.01	10.86
		165	5825.0	7.65	7.90	10.79

©2014 A Test Lab Techno Corp.

Band	Data Rate	CH	Frequency (MHz)	Average Power (dBm)		
				ANT 1	ANT 2	ANT 1+2
IEEE 802.11n (5GHz) 20MHz	13 M	36	5180.0	8.59	8.62	**11.62**
		40	5200.0	8.13	8.51	11.33
		44	5220.0	8.32	8.38	11.36
		149	5745.0	8.00	7.83	**10.93**
		153	5765.0	7.96	7.55	10.77
		157	5785.0	7.84	7.77	10.82
		161	5805.0	7.81	7.64	10.74
		165	5825.0	7.94	7.67	10.82
	130 M	36	5180.0	8.02	8.36	11.20
		40	5200.0	8.28	8.22	11.26
		44	5220.0	8.35	8.15	11.26
		149	5745.0	7.41	7.21	10.32
		153	5765.0	7.34	7.23	10.30
		157	5785.0	7.22	7.13	10.19
		161	5805.0	7.49	7.55	10.53
		165	5825.0	7.58	7.61	10.61
IEEE 802.11n (5GHz) 40MHz	27 M	38	5190.0	8.08	8.17	**11.14**
		151	5755.0	7.84	7.87	**10.87**
		159	5795.0	7.67	7.77	10.73
	270 M	38	5190.0	7.81	7.88	10.86
		151	5755.0	7.32	7.45	10.40
		159	5795.0	7.24	7.24	10.25

©2014 A Test Lab Techno Corp.

6.10 Antenna location

Antenna-User					
Distance of WWAN to edge		Distance of WLAN_Antenna1 to edge		Distance of WLAN_Antenna2 to edge	
WWAN to Side 1	2.1 mm	WLAN_ANT1 to Side 1	1.9 mm	WLAN_ANT2 to Side 1	1.9 mm
WWAN to Side 2	4.4 mm	WLAN_ANT1 to Side 2	7.1 mm	WLAN_ANT2 to Side 2	7.1 mm
WWAN to Side 3	1.8 mm	WLAN_ANT1 to Side 3	2.4 mm	WLAN_ANT2 to Side 3	2.4 mm
WWAN to Side 4	1.8 mm	WLAN_ANT1 to Side 4	59.9 mm	WLAN_ANT2 to Side 4	59.9 mm
WWAN to Side 5	90.2 mm	WLAN_ANT1 to Side 5	21.0 mm	WLAN_ANT2 to Side 5	70.2 mm
WWAN to Side 6	1.9 mm	WLAN_ANT1 to Side 6	70.1 mm	WLAN_ANT2 to Side 6	21.4 mm

Antenna-Antenna	
Antenna account	Distance (cm)
WWAN to WLAN_ANT1	52.2
WWAN to WLAN_ANT2	6.0
WLAN_ANT1 to WLAN_ANT2	31.0

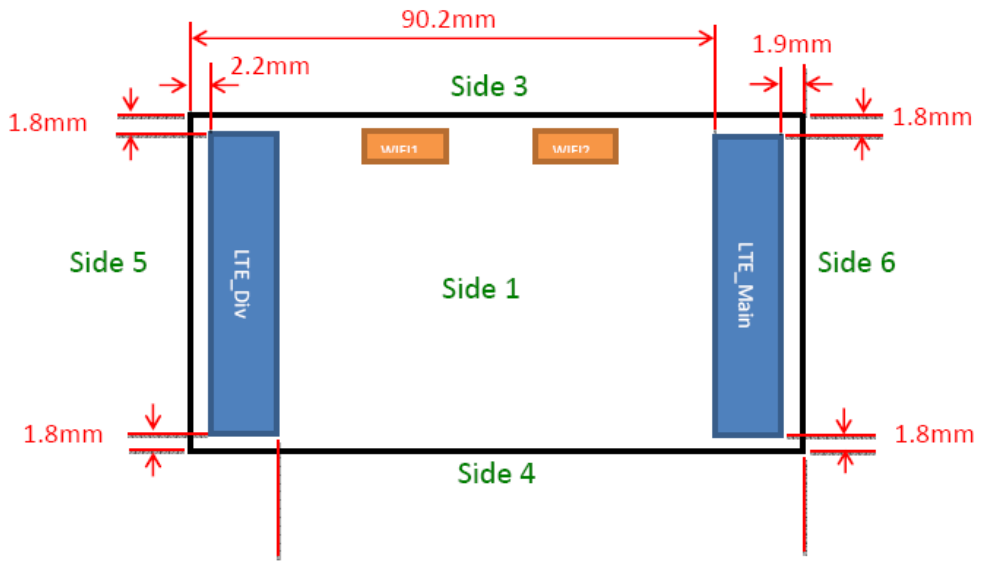

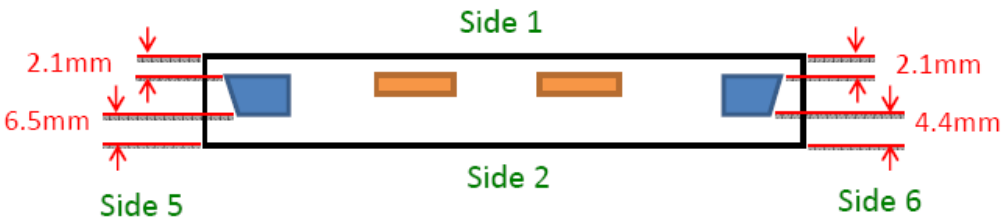

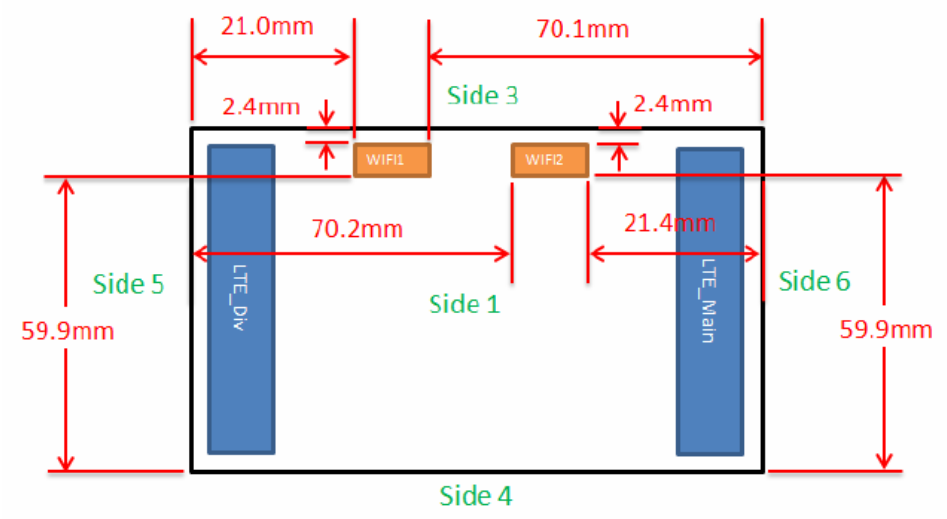
21.0mm
70.1mm
2.4mm
Side 3
2.4mm
WIFI1
WIFI2
70.2mm
21.4mm
Side 5
LTE_Div
Side 1
LTE_Main
Side 6
59.9mm
59.9mm
Side 4

Side 1

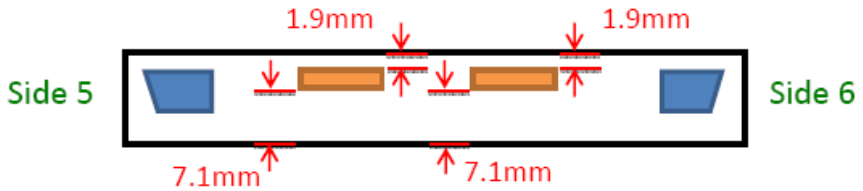
1.9mm
1.9mm
Side 5
Side 6
7.1mm
7.1mm

Side 2

6.11 Stand-alone SAR Evaluate

Transmitter and antenna implementation as below:

Band	WWAN Antenna	WLAN Antenna 1	WLAN Antenna 2
WWAN	V	X	X
WLAN	X	V	V

Stand-alone transmission configurations as below:

Band	Side 1	Side 2	Side 3	Side 4	Side 5	Side 6
GPRS 850	v	v	v	v		v
EGPRS 1900	v	v	v	v		v
WCDMA/HSDPA/HSUPA Band II	v	v	v	v		v
WCDMA/HSDPA/HSUPA Band IV	v	v	v	v		v
WCDMA/HSDPA/HSUPA Band V	v	v	v	v		v
LTE Band 2	v	v	v	v		v
LTE Band 4	v	v	v	v		v
LTE Band 5	v	v	v	v		v
LTE Band 7	v	v	v	v		v
LTE Band 12	v	v	v	v		v
LTE Band 13	v	v	v	v		v
LTE Band 17	v	v	v	v		v
IEEE 802.11b	v	v	v			v
IEEE 802.11g	v	v	v			v
IEEE 802.11n 20MHz	v	v	v			v
IEEE 802.11n 40MHz	v	v	v			v
IEEE 802.11a	v	v	v			v

Note: The "-" on behalf of Stand-alone SAR is not required (Refer to KDB447498 D01V05r02 4.3.1 for the Standalone SAR test exclusion considerations)

Antenna	Side	Band	Channel	Power (dBm)	Frequency (GHz)	Distance (mm)	Power (mW)	Result	Limit	Exclusion Considerations SAR[1g]
WWAN	1	GPRS 850	128	31.0	0.824	5.0	1259	228.6	3	SAR is required
		EGPRS 1900	512	27.0	1.850	5.0	501	136.3	3	SAR is required
		WCDMA Band II	9538	23.5	1.908	5.0	224	61.9	3	SAR is required
		WCDMA Band IV	1513	23.5	1.753	5.0	224	59.3	3	SAR is required
		WCDMA Band V	4132	24.0	0.826	5.0	251	45.6	3	SAR is required
		LTE Band 2	19100	24.0	1.900	5.0	251	69.2	3	SAR is required
		LTE Band 4	20300	23.8	1.754	5.0	240	63.6	3	SAR is required
		LTE Band 5	20450	24.0	0.829	5.0	251	45.7	3	SAR is required
		LTE Band 7	20850	23.0	2.510	5.0	200	63.4	3	SAR is required
		LTE Band 12	23095	24.0	0.708	5.0	251	42.2	3	SAR is required
		LTE Band 13	23230	24.0	0.782	5.0	251	44.4	3	SAR is required
		LTE Band 17	23780	24.0	0.709	5.0	251	42.3	3	SAR is required
WLAN (MIMO)		IEEE 802.11b	1	13.0	2.412	5.0	20	6.2	3	SAR is required
		IEEE 802.11g	6	13.0	2.437	5.0	20	6.2	3	SAR is required
		IEEE 802.11n 20MHz	6	13.0	2.437	5.0	20	6.2	3	SAR is required
		IEEE 802.11n 40MHz	6	13.0	2.437	5.0	20	6.2	3	SAR is required
		IEEE 802.11a	40	13.0	5.200	5.0	20	9.1	3	SAR is required
		IEEE 802.11a	44	13.0	5.220	5.0	20	9.1	3	SAR is required
		IEEE 802.11a	149	13.0	5.745	5.0	20	9.6	3	SAR is required
		IEEE 802.11a	153	13.0	5.765	5.0	20	9.6	3	SAR is required

©2014 A Test Lab Techno Corp.

Antenna	Side	Band	Channel	Power (dBm)	Frequency (GHz)	Distance (mm)	Power (mW)	Result	Limit	Exclusion Considerations SAR[1g]
WWAN	2	GPRS 850	128	31.0	0.824	5.0	1259	228.6	3	SAR is required
		EGPRS 1900	512	27.0	1.850	5.0	501	136.3	3	SAR is required
		WCDMA Band II	9538	23.5	1.908	5.0	224	61.9	3	SAR is required
		WCDMA Band IV	1513	23.5	1.753	5.0	224	59.3	3	SAR is required
		WCDMA Band V	4132	24.0	0.826	5.0	251	45.6	3	SAR is required
		LTE Band 2	19100	24.0	1.900	5.0	251	69.2	3	SAR is required
		LTE Band 4	20300	23.8	1.754	5.0	240	63.6	3	SAR is required
		LTE Band 5	20450	24.0	0.829	5.0	251	45.7	3	SAR is required
		LTE Band 7	20850	23.0	2.510	5.0	200	63.4	3	SAR is required
		LTE Band 12	23095	24.0	0.708	5.0	251	42.2	3	SAR is required
		LTE Band 13	23230	24.0	0.782	5.0	251	44.4	3	SAR is required
		LTE Band 17	23780	24.0	0.709	5.0	251	42.3	3	SAR is required
WLAN (MIMO)		IEEE 802.11b	1	13.0	2.412	7.1	20	4.4	3	SAR is required
		IEEE 802.11g	6	13.0	2.437	7.1	20	4.4	3	SAR is required
		IEEE 802.11n 20MHz	6	13.0	2.437	7.1	20	4.4	3	SAR is required
		IEEE 802.11n 40MHz	6	13.0	2.437	7.1	20	4.4	3	SAR is required
		IEEE 802.11a	40	13.0	5.200	7.1	20	6.4	3	SAR is required
		IEEE 802.11a	44	13.0	5.220	7.1	20	6.4	3	SAR is required
		IEEE 802.11a	149	13.0	5.745	7.1	20	6.8	3	SAR is required
		IEEE 802.11a	153	13.0	5.765	7.1	20	6.8	3	SAR is required

©2014 A Test Lab Techno Corp.

Antenna	Side	Band	Channel	Power (dBm)	Frequency (GHz)	Distance (mm)	Power (mW)	Result	Limit	Exclusion Considerations SAR1g
WWAN	3	GPRS 850	128	31.0	0.824	5.0	1259	228.6	3	SAR is required
		EGPRS 1900	512	27.0	1.850	5.0	501	136.3	3	SAR is required
		WCDMA Band II	9538	23.5	1.908	5.0	224	61.9	3	SAR is required
		WCDMA Band IV	1513	23.5	1.753	5.0	224	59.3	3	SAR is required
		WCDMA Band V	4132	24.0	0.826	5.0	251	45.6	3	SAR is required
		LTE Band 2	19100	24.0	1.900	5.0	251	69.2	3	SAR is required
		LTE Band 4	20300	23.8	1.754	5.0	240	63.6	3	SAR is required
		LTE Band 5	20450	24.0	0.829	5.0	251	45.7	3	SAR is required
		LTE Band 7	20850	23.0	2.510	5.0	200	63.4	3	SAR is required
		LTE Band 12	23095	24.0	0.708	5.0	251	42.2	3	SAR is required
		LTE Band 13	23230	24.0	0.782	5.0	251	44.4	3	SAR is required
		LTE Band 17	23780	24.0	0.709	5.0	251	42.3	3	SAR is required
WLAN (MIMO)		IEEE 802.11b	1	13.0	2.412	5.0	20	6.2	3	SAR is required
		IEEE 802.11g	6	13.0	2.437	5.0	20	6.2	3	SAR is required
		IEEE 802.11n 20MHz	6	13.0	2.437	5.0	20	6.2	3	SAR is required
		IEEE 802.11n 40MHz	6	13.0	2.437	5.0	20	6.2	3	SAR is required
		IEEE 802.11a	40	13.0	5.200	5.0	20	9.1	3	SAR is required
		IEEE 802.11a	44	13.0	5.220	5.0	20	9.1	3	SAR is required
		IEEE 802.11a	149	13.0	5.745	5.0	20	9.6	3	SAR is required
		IEEE 802.11a	153	13.0	5.765	5.0	20	9.6	3	SAR is required
WWAN	4	GPRS 850	128	31.0	0.824	5.0	1259	228.6	3	SAR is required
		EGPRS 1900	512	27.0	1.850	5.0	501	136.3	3	SAR is required
		WCDMA Band II	9538	23.5	1.908	5.0	224	61.9	3	SAR is required
		WCDMA Band IV	1513	23.5	1.753	5.0	224	59.3	3	SAR is required
		WCDMA Band V	4132	24.0	0.826	5.0	251	45.6	3	SAR is required
		LTE Band 2	19100	24.0	1.900	5.0	251	69.2	3	SAR is required
		LTE Band 4	20300	23.8	1.754	5.0	240	63.6	3	SAR is required
		LTE Band 5	20450	24.0	0.829	5.0	251	45.7	3	SAR is required
		LTE Band 7	20850	23.0	2.510	5.0	200	63.4	3	SAR is required
		LTE Band 12	23095	24.0	0.708	5.0	251	42.2	3	SAR is required
		LTE Band 13	23230	24.0	0.782	5.0	251	44.4	3	SAR is required
		LTE Band 17	23780	24.0	0.709	5.0	251	42.3	3	SAR is required

©2014 A Test Lab Techno Corp.

Antenna	Side	Band	Channel	Power (dBm)	Frequency (GHz)	Distance (mm)	Power (mW)	Result	Limit	Exclusion Considerations SAR[1g]
WLAN (MIMO)	5	IEEE 802.11b	1	13.0	2.412	21.0	20	1.5	3	SAR is not required
		IEEE 802.11g	6	13.0	2.437	21.0	20	1.5	3	SAR is not required
		IEEE 802.11n 20MHz	6	13.0	2.437	21.0	20	1.5	3	SAR is not required
		IEEE 802.11n 40MHz	6	13.0	2.437	21.0	20	1.5	3	SAR is not required
		IEEE 802.11a	40	13.0	5.200	21.0	20	2.2	3	SAR is not required
		IEEE 802.11a	44	13.0	5.220	21.0	20	2.2	3	SAR is not required
		IEEE 802.11a	149	13.0	5.745	21.0	20	2.3	3	SAR is not required
		IEEE 802.11a	153	13.0	5.765	21.0	20	2.3	3	SAR is not required
WWAN	6	GPRS 850	128	31.0	0.824	5.0	1259	228.6	3	SAR is required
		EGPRS 1900	512	27.0	1.850	5.0	501	136.3	3	SAR is required
		WCDMA Band II	9538	23.5	1.908	5.0	224	61.9	3	SAR is required
		WCDMA Band IV	1513	23.5	1.753	5.0	224	59.3	3	SAR is required
		WCDMA Band V	4132	24.0	0.826	5.0	251	45.6	3	SAR is required
		LTE Band 2	19100	24.0	1.900	5.0	251	69.2	3	SAR is required
		LTE Band 4	20300	23.8	1.754	5.0	240	63.6	3	SAR is required
		LTE Band 5	20450	24.0	0.829	5.0	251	45.7	3	SAR is required
		LTE Band 7	20850	23.0	2.510	5.0	200	63.4	3	SAR is required
		LTE Band 12	23095	24.0	0.708	5.0	251	42.2	3	SAR is required
		LTE Band 13	23230	24.0	0.782	5.0	251	44.4	3	SAR is required
		LTE Band 17	23780	24.0	0.709	5.0	251	42.3	3	SAR is required
WLAN (MIMO)		IEEE 802.11b	1	13.0	2.412	21.4	20	1.5	3	SAR is not required
		IEEE 802.11g	6	13.0	2.437	21.4	20	1.5	3	SAR is not required
		IEEE 802.11n 20MHz	6	13.0	2.437	21.4	20	1.5	3	SAR is not required
		IEEE 802.11n 40MHz	6	13.0	2.437	21.4	20	1.5	3	SAR is not required
		IEEE 802.11a	40	13.0	5.200	21.4	20	2.1	3	SAR is not required
		IEEE 802.11a	44	13.0	5.220	21.4	20	2.1	3	SAR is not required
		IEEE 802.11a	149	13.0	5.745	21.4	20	2.2	3	SAR is not required
		IEEE 802.11a	153	13.0	5.765	21.4	20	2.2	3	SAR is not required

©2014 A Test Lab Techno Corp.

Antenna	Side	Band	Channel	Power (dBm)	Frequency (GHz)	Distance (mm)	Power (mW)	Power Thresholds (mW) SAR1g	Exclusion Considerations SAR1g
WLAN (MIMO)	4	IEEE 802.11b	1	13.0	2.412	59.9	20	196	SAR is not required
		IEEE 802.11g	6	13.0	2.437	59.9	20	195	SAR is not required
		IEEE 802.11n 20MHz	6	13.0	2.437	59.9	20	195	SAR is not required
		IEEE 802.11n 40MHz	6	13.0	2.437	59.9	20	195	SAR is not required
		IEEE 802.11a	40	13.0	5.200	59.9	20	165	SAR is not required
		IEEE 802.11a	44	13.0	5.220	59.9	20	165	SAR is not required
		IEEE 802.11a	149	13.0	5.745	59.9	20	162	SAR is not required
		IEEE 802.11a	153	13.0	5.765	59.9	20	161	SAR is not required
WWAN	5	GPRS 850	128	31.0	0.824	90.2	1259	386	SAR is required
		EGPRS 1900	512	27.0	1.850	90.2	501	512	SAR is not required
		WCDMA Band II	9538	23.5	1.908	90.2	224	511	SAR is not required
		WCDMA Band IV	1513	23.5	1.753	90.2	224	515	SAR is not required
		WCDMA Band V	4132	24.0	0.826	90.2	251	386	SAR is not required
		LTE Band 2	19100	24.0	1.900	90.2	251	511	SAR is not required
		LTE Band 4	20300	23.8	1.754	90.2	240	515	SAR is not required
		LTE Band 5	20450	24.0	0.829	90.2	251	387	SAR is not required
		LTE Band 7	20850	23.0	2.510	90.2	200	497	SAR is not required
		LTE Band 12	23095	24.0	0.708	90.2	251	368	SAR is not required
		LTE Band 13	23230	24.0	0.782	90.2	251	379	SAR is not required
		LTE Band 17	23780	24.0	0.709	90.2	251	368	SAR is not required

©2014 A Test Lab Techno Corp.

6.12 Simultaneous Transmitting Evaluate

Simultaneous transmission configurations as below:

Condition	Side	Frequency Band	
		WWAN	WLAN (MIMO)
1	1	v	v
2	2	v	v
3	3	v	v
4	4	v	v
5	5	v	v
6	6	v	v

6.12.1 Estimated SAR

Estimated SAR for test separation distances ≤ 50 mm:

Antenna	Side	Band	Channel	Power-Tune up (dBm)	Frequency (GHz)	Distance (mm)	Power (mW)	Estimated SAR (mW/g)
								SAR^{1g}
WLAN (MIMO)	5	IEEE 802.11b	1	13	2.412	21	20	0.197
		IEEE 802.11g	6	13	2.437	21	20	0.198
		IEEE 802.11n 20MHz	6	13	2.437	21	20	0.198
		IEEE 802.11n 40MHz	6	13	2.437	21	20	0.198
		IEEE 802.11a	40	13	5.200	21	20	0.290
		IEEE 802.11a	44	13	5.220	21	20	0.290
		IEEE 802.11a	149	13	5.745	21	20	0.304
		IEEE 802.11a	153	13	5.765	21	20	0.305

©2014 A Test Lab Techno Corp.

Estimated SAR for test separation distances > 50 mm:

Antenna	Side	Band	Estimated SAR (mW/g)
			SAR^{1g}
WLAN	4	WLAN (MIMO)	0.4
WWAN	5	GPRS 850	0.4
		EGPRS 1900	0.4
		WCDMA Band II	0.4
		WCDMA Band IV	0.4
		WCDMA Band V	0.4
		LTE Band 2	0.4
		LTE Band 4	0.4
		LTE Band 5	0.4
		LTE Band 7	0.4
		LTE Band 12	0.4
		LTE Band 13	0.4
		LTE Band 17	0.4

©2014 A Test Lab Techno Corp.

6.12.2 Sum of 1-g SAR of all simultaneously transmitting

When the sum of 1-g SAR of all simultaneously transmitting antennas in and operating mode and exposure condition combination is within the SAR limit, SAR test exclusion applies to that simultaneous transmission configuration.

Sum of 1-g SAR of summary as below:

Phantom Position		Spacing (mm)	ASSY	WWAN		Wi-Fi Antenna 1		Wi-Fi Antenna 2		Wi-Fi MIMO		∑ SAR1g (W/Kg)	Event
				Band	SAR1g (W/Kg)	Band	SAR1g (W/Kg)	Band	SAR1g (W/Kg)	Band	SAR1g (W/Kg)		
Flat	Side 1	10	N/A	GPRS 850	0.716	WLAN	-	WLAN	-	IEEE 802.11a	0.138	0.854	<1.6
		10	N/A	EGPRS 1900	0.966	WLAN	-	WLAN	-	IEEE 802.11a	0.138	1.104	<1.6
		10	N/A	WCDMA Band II	1.136	WLAN	-	WLAN	-	IEEE 802.11a	0.138	1.274	<1.6
		10	N/A	WCDMA Band IV	0.744	WLAN	-	WLAN	-	IEEE 802.11a	0.138	0.882	<1.6
		10	N/A	WCDMA Band V	0.611	WLAN	-	WLAN	-	IEEE 802.11a	0.138	0.749	<1.6
		10	N/A	LTE Band 2	1.249	WLAN	-	WLAN	-	IEEE 802.11a	0.138	1.387	<1.6
		10	N/A	LTE Band 4	0.555	WLAN	-	WLAN	-	IEEE 802.11a	0.138	0.693	<1.6
		10	N/A	LTE Band 5	1.311	WLAN	-	WLAN	-	IEEE 802.11a	0.138	1.449	<1.6
		10	N/A	LTE Band 7	0.877	WLAN	-	WLAN	-	IEEE 802.11a	0.138	1.015	<1.6
		10	N/A	LTE Band 12	1.291	WLAN	-	WLAN	-	IEEE 802.11a	0.138	1.429	<1.6
		10	N/A	LTE Band 13	1.180	WLAN	-	WLAN	-	IEEE 802.11a	0.138	1.318	<1.6
		10	N/A	LTE Band 17	1.289	WLAN	-	WLAN	-	IEEE 802.11a	0.138	1.427	<1.6
	Side 2	10	N/A	GPRS 850	0.609	WLAN	-	WLAN	-	802.11b	0.065	0.674	<1.6
		10	N/A	EGPRS 1900	0.553	WLAN	-	WLAN	-	802.11b	0.065	0.618	<1.6
		10	N/A	WCDMA Band II	0.515	WLAN	-	WLAN	-	802.11b	0.065	0.580	<1.6
		10	N/A	WCDMA Band IV	0.455	WLAN	-	WLAN	-	802.11b	0.065	0.520	<1.6
		10	N/A	WCDMA Band V	0.494	WLAN	-	WLAN	-	802.11b	0.065	0.559	<1.6
		10	N/A	LTE Band 2	0.505	WLAN	-	WLAN	-	802.11b	0.065	0.570	<1.6
		10	N/A	LTE Band 4	0.343	WLAN	-	WLAN	-	802.11b	0.065	0.408	<1.6
		10	N/A	LTE Band 5	1.100	WLAN	-	WLAN	-	802.11b	0.065	1.165	<1.6
		10	N/A	LTE Band 7	0.861	WLAN	-	WLAN	-	802.11b	0.065	0.926	<1.6
		10	N/A	LTE Band 12	1.057	WLAN	-	WLAN	-	802.11b	0.065	1.122	<1.6
		10	N/A	LTE Band 13	0.793	WLAN	-	WLAN	-	802.11b	0.065	0.858	<1.6
		10	N/A	LTE Band 17	1.055	WLAN	-	WLAN	-	802.11b	0.065	1.120	<1.6

©2014 A Test Lab Techno Corp.

Phantom Position		Spacing (mm)	ASSY	WWAN		Wi-Fi Antenna 1		Wi-Fi Antenna 2		Wi-Fi MIMO		∑ SAR1g (W/Kg)	Event
				Band	SAR1g (W/Kg)	Band	SAR1g (W/Kg)	Band	SAR1g (W/Kg)	Band	SAR1g (W/Kg)		
Flat	Side 3	10	N/A	GPRS 850	0.220	WLAN	-	WLAN	-	IEEE 802.11a	0.164	0.384	<1.6
		10	N/A	EGPRS 1900	0.133	WLAN	-	WLAN	-	IEEE 802.11a	0.164	0.297	<1.6
		10	N/A	WCDMA Band II	0.144	WLAN	-	WLAN	-	IEEE 802.11a	0.164	0.308	<1.6
		10	N/A	WCDMA Band IV	0.106	WLAN	-	WLAN	-	IEEE 802.11a	0.164	0.270	<1.6
		10	N/A	WCDMA Band V	0.202	WLAN	-	WLAN	-	IEEE 802.11a	0.164	0.366	<1.6
		10	N/A	LTE Band 2	0.133	WLAN	-	WLAN	-	IEEE 802.11a	0.164	0.297	<1.6
		10	N/A	LTE Band 4	0.082	WLAN	-	WLAN	-	IEEE 802.11a	0.164	0.246	<1.6
		10	N/A	LTE Band 5	0.435	WLAN	-	WLAN	-	IEEE 802.11a	0.164	0.599	<1.6
		10	N/A	LTE Band 7	0.515	WLAN	-	WLAN	-	IEEE 802.11a	0.164	0.679	<1.6
		10	N/A	LTE Band 12	0.405	WLAN	-	WLAN	-	IEEE 802.11a	0.164	0.569	<1.6
		10	N/A	LTE Band 13	0.262	WLAN	-	WLAN	-	IEEE 802.11a	0.164	0.426	<1.6
		10	N/A	LTE Band 17	0.418	WLAN	-	WLAN	-	IEEE 802.11a	0.164	0.582	<1.6
	Side 4	10	N/A	GPRS 850	0.237	WLAN	-	WLAN	-	IEEE 802.11a	**0.4	0.637	<1.6
		10	N/A	EGPRS 1900	0.489	WLAN	-	WLAN	-	IEEE 802.11a	**0.4	0.889	<1.6
		10	N/A	WCDMA Band II	0.443	WLAN	-	WLAN	-	IEEE 802.11a	**0.4	0.843	<1.6
		10	N/A	WCDMA Band IV	0.434	WLAN	-	WLAN	-	IEEE 802.11a	**0.4	0.834	<1.6
		10	N/A	WCDMA Band V	0.208	WLAN	-	WLAN	-	IEEE 802.11a	**0.4	0.608	<1.6
		10	N/A	LTE Band 2	0.415	WLAN	-	WLAN	-	IEEE 802.11a	**0.4	0.815	<1.6
		10	N/A	LTE Band 4	0.319	WLAN	-	WLAN	-	IEEE 802.11a	**0.4	0.719	<1.6
		10	N/A	LTE Band 5	0.559	WLAN	-	WLAN	-	IEEE 802.11a	**0.4	0.959	<1.6
		10	N/A	LTE Band 7	0.449	WLAN	-	WLAN	-	IEEE 802.11a	**0.4	0.849	<1.6
		10	N/A	LTE Band 12	0.432	WLAN	-	WLAN	-	IEEE 802.11a	**0.4	0.832	<1.6
		10	N/A	LTE Band 13	0.201	WLAN	-	WLAN	-	IEEE 802.11a	**0.4	0.601	<1.6
		10	N/A	LTE Band 17	0.462	WLAN	-	WLAN	-	IEEE 802.11a	**0.4	0.862	<1.6

*=Estimated SAR

©2014 A Test Lab Techno Corp.

Phantom Position		Spacing (mm)	ASSY	WWAN		Wi-Fi Antenna 1		Wi-Fi Antenna 2		Wi-Fi MIMO		∑ SAR1g (W/Kg)	Event
				Band	SAR1g (W/Kg)	Band	SAR1g (W/Kg)	Band	SAR1g (W/Kg)	Band	SAR1g (W/Kg)		
Flat	Side 5	10	N/A	GPRS 850	0.050	WLAN	-	WLAN	-	IEEE 802.11a	*0.305	0.355	<1.6
		10	N/A	EGPRS 1900	**0.4	WLAN	-	WLAN	-	IEEE 802.11a	*0.305	0.705	<1.6
		10	N/A	WCDMA Band II	**0.4	WLAN	-	WLAN	-	IEEE 802.11a	*0.305	0.705	<1.6
		10	N/A	WCDMA Band IV	**0.4	WLAN	-	WLAN	-	IEEE 802.11a	*0.305	0.705	<1.6
		10	N/A	WCDMA Band V	**0.4	WLAN	-	WLAN	-	IEEE 802.11a	*0.305	0.705	<1.6
		10	N/A	LTE Band 2	**0.4	WLAN	-	WLAN	-	IEEE 802.11a	*0.305	0.705	<1.6
		10	N/A	LTE Band 4	**0.4	WLAN	-	WLAN	-	IEEE 802.11a	*0.305	0.705	<1.6
		10	N/A	LTE Band 5	**0.4	WLAN	-	WLAN	-	IEEE 802.11a	*0.305	0.705	<1.6
		10	N/A	LTE Band 7	**0.4	WLAN	-	WLAN	-	IEEE 802.11a	*0.305	0.705	<1.6
		10	N/A	LTE Band 12	**0.4	WLAN	-	WLAN	-	IEEE 802.11a	*0.305	0.705	<1.6
		10	N/A	LTE Band 13	**0.4	WLAN	-	WLAN	-	IEEE 802.11a	*0.305	0.705	<1.6
		10	N/A	LTE Band 17	**0.4	WLAN	-	WLAN	-	IEEE 802.11a	*0.305	0.705	<1.6
	Side 6	10	N/A	GPRS 850	0.177	WLAN	-	WLAN	-	IEEE 802.11a	0.030	0.207	<1.6
		10	N/A	EGPRS 1900	0.814	WLAN	-	WLAN	-	IEEE 802.11a	0.030	0.844	<1.6
		10	N/A	WCDMA Band II	0.359	WLAN	-	WLAN	-	IEEE 802.11a	0.030	0.389	<1.6
		10	N/A	WCDMA Band IV	1.181	WLAN	-	WLAN	-	IEEE 802.11a	0.030	1.211	<1.6
		10	N/A	WCDMA Band V	0.163	WLAN	-	WLAN	-	IEEE 802.11a	0.030	0.193	<1.6
		10	N/A	LTE Band 2	0.451	WLAN	-	WLAN	-	IEEE 802.11a	0.030	0.481	<1.6
		10	N/A	LTE Band 4	1.435	WLAN	-	WLAN	-	IEEE 802.11a	0.030	1.465	<1.6
		10	N/A	LTE Band 5	0.190	WLAN	-	WLAN	-	IEEE 802.11a	0.030	0.220	<1.6
		10	N/A	LTE Band 7	1.396	WLAN	-	WLAN	-	IEEE 802.11a	0.030	1.426	<1.6
		10	N/A	LTE Band 12	0.113	WLAN	-	WLAN	-	IEEE 802.11a	0.030	0.143	<1.6
		10	N/A	LTE Band 13	0.258	WLAN	-	WLAN	-	IEEE 802.11a	0.030	0.288	<1.6
		10	N/A	LTE Band 17	0.117	WLAN	-	WLAN	-	IEEE 802.11a	0.030	0.147	<1.6

©2014 A Test Lab Techno Corp.

6.12.3 SAR to peak location separation ratio (SPLSR)

When the sum of SAR is larger than the limit, SAR test exclusion is determined by the SAR to peak location separation ratio. The ratio is determined by (SAR1 + SAR2)^1.5/Ri, rounded to two decimal digits, and must be ≤ 0.04 for all antenna pairs in the configuration to qualify for 1-g SAR test exclusion.

All of sum of SAR < 1.6 W/Kg, therefore SPLSR is not required.

6.13 SAR test reduction according to KDB

General:

- The test data reported are the worst-case SAR value with the position set in a typical configuration.
  Test procedures used were according to FCC, Supplement C [June 2001], IEEE1528-2013 and IEEE Std. 1528a-2005.
- All modes of operation were investigated, and worst-case results are reported.
- Tissue parameters and temperatures are listed on the SAR plots.
- Batteries are fully charged for all readings.
- When the Channel's SAR 1g of maximum conducted power is > 0.8 mW/g, low, middle and high channel are supposed to be tested.

KDB 447498:

- The test data reported are the worst-case SAR value with the position set in a typical configuration.
  Test procedures used were according to IEEE1528-2013 and IEEE Std. 1528a-2005.

KDB 865664:

- Repeated measurement is not required when the original highest measured SAR is < 0.80 W/kg.
- When the original highest measured SAR is ≥ 0.80 W/kg, repeat that measurement once.
- Perform a second repeated measurement only if the ratio of largest to smallest SAR for the original and first repeated measurements is > 1.20 or when the original or repeated measurement is ≥ 1.45 W/kg.
- Perform a third repeated measurement only if the original, first or second repeated measurement is ≥ 1.5 W/kg and the ratio of largest to smallest SAR for the original, first and second repeated measurements is > 1.20.

©2014 A Test Lab Techno Corp.

KDB 941225:

- In order to qualify for the above test reduction, the maximum burst-averaged output power for each mode (GMS/GPRS/EDGE) and the corresponding multi-slot class must be clearly identified in the SAR report for each frequency band.We perform worst case SAR with maximum time-average power on GMS/GPRS/EDGE mode.
- When HSDPA & (HSUPA / HSPA+ uplink with QPSK) power are not more than WCDMA 12.2K RMC 0.25dB and the SAR value of WCDMA BII/BV<1.2 mW/g ,therefore HSDPA & HSUPA / HSPA+ Stand-alone SAR is not required.
- When the reported SAR is ≤ 0.8 W/kg, testing of the remaining RB offset configurations and required test channels is not required for 1 RB allocation, otherwise, SAR is required for the remaining required test channels and only for the RB offset configuration with the highest output power for that channel.
- For QPSK with 100% RB allocation, SAR is not required when the highest maximum output power for 100 % RB allocation is less than the highest maximum output power in 50% and 1 RB allocations and the highest reported SAR for 1 RB and 50% RB allocation in 5.2.1 and 5.2.2 are ≤ 0.8 W/kg. Otherwise, SAR is measured for the highest output power channel and if the reported SAR is > 1.45 W/kg, the remaining required test channels must also be tested.
- SAR is required only when the highest maximum output power for the configuration in the higher order modulation is > ½ dB higher than the same configuration in QPSK or when the reported SAR for the QPSK configuration is > 1.45 W/kg.
- For smaller channel bandwidth SAR when the highest maximum output power of a configuration requiring testing in the smaller channel bandwidth is > ½ dB higher than the equivalent channel configurations in the largest channel bandwidth configuration or the reported SAR of a configuration for the largest channel bandwidth is > 1.45 W/kg.
- SAR must be measured for all sides and surfaces with a transmitting antenna located within 25 mm from that surface or edge.

KDB 248227:

- If the conducted power of (802.11g and 802.11n) are higher than 802.11b 0.25dB,(802.11g and 802.11n) are supposed to be tested.

©2014 A Test Lab Techno Corp.

7. System Verification and Validation

7.1 Symmetric Dipoles for System Verification

Construction	Symmetrical dipole with l/4 balun enables measurement of feed point impedance with NWA matched for use near flat phantoms filled with head simulating solutions Includes distance holder and tripod adaptor Calibration Calibrated SAR value for specified position and input power at the flat phantom in head simulating solutions.
Frequency	750, 835, 1750, 1900, 2450, 2600, 5200 and 5800 MHz
Return Loss	> 20 dB at specified verification position
Power Capability	> 100 W (f < 1GHz); > 40 W (f > 1GHz)
Options	Dipoles for other frequencies or solutions and other calibration conditions are available upon request
Dimensions	D750V2: dipole length 177 mm; overall height 300 mm D835V2: dipole length 161 mm; overall height 340 mm D1750V2: dipole length 75.2 mm; overall height 301.5 mm D1900V2: dipole length 67.7 mm; overall height 300 mm D2450V2: dipole length 51.5 mm; overall height 300 mm D2600V2: dipole length 49.2 mm; overall height 290 mm D5GHzV2: dipole length 20.6mm; overall height 300 mm

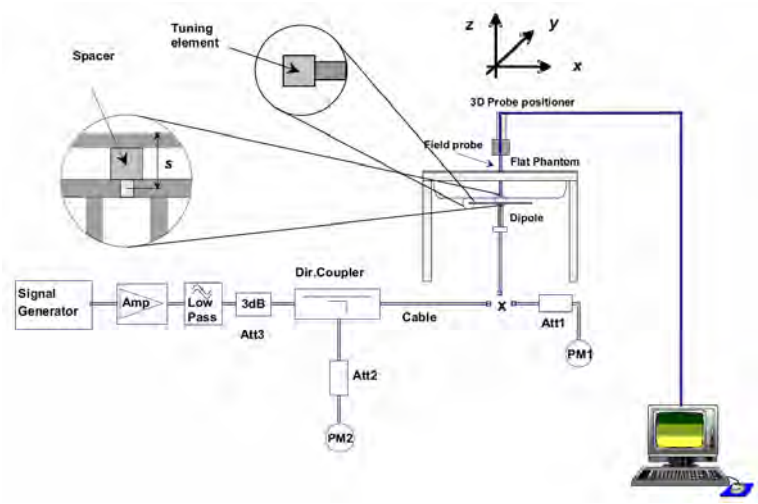

Figure 10. System Verification Setup Diagram

Figure 11. Validation Kit

7.2 Liquid Parameters

Liquid Verify								
Ambient Temperature： 22 ± 2 °C；Relative Humidity：40 -70%								
Liquid Type	Frequency	Temp (°C)	Parameters	Target Value	Measured Value	Deviation (%)	Limit (%)	Measured Date
750MHz (Body)	750MHz	22.0	εr	55.53	53.76	-3.19%	± 5	2014/10/01
			σ	0.963	0.978	1.56%	± 5	
	782MHz	22.0	εr	55.41	53.41	-3.61%	± 5	
			σ	0.966	0.994	2.90%	± 5	
750MHz (Body)	704MHz	22.0	εr	55.71	54.07	-2.94%	± 5	2014/11/16
			σ	0.960	0.942	-1.88%	± 5	
	708MHz	22.0	εr	55.69	54.02	-3.00%	± 5	
			σ	0.960	0.945	-1.56%	± 5	
	709MHz	22.0	εr	55.69	54.01	-3.02%	± 5	
			σ	0.960	0.946	-1.46%	± 5	
	710MHz	22.0	εr	55.69	54.00	-3.04%	± 5	
			σ	0.960	0.947	-1.35%	± 5	
	711MHz	22.0	εr	55.68	53.99	-3.04%	± 5	
			σ	0.960	0.948	-1.25%	± 5	
	750MHz	22.0	εr	55.53	53.57	-3.53%	± 5	
			σ	0.963	0.983	2.08%	± 5	
750MHz (Body)	704MHz	22.0	εr	55.71	54.07	-2.94%	± 5	2014/11/17
			σ	0.960	0.942	-1.88%	± 5	
	708MHz	22.0	εr	55.69	54.02	-3.00%	± 5	
			σ	0.960	0.945	-1.56%	± 5	
	709MHz	22.0	εr	55.69	54.01	-3.02%	± 5	
			σ	0.960	0.946	-1.46%	± 5	
	710MHz	22.0	εr	55.69	54.00	-3.04%	± 5	
			σ	0.960	0.947	-1.35%	± 5	
	711MHz	22.0	εr	55.68	53.99	-3.04%	± 5	
			σ	0.960	0.948	-1.25%	± 5	
	750MHz	22.0	εr	55.53	53.57	-3.53%	± 5	
			σ	0.963	0.983	2.08%	± 5	

Table 4. Measured Tissue dielectric parameters for body phantoms -1

©2014 A Test Lab Techno Corp.

Liquid Verify								
Ambient Temperature： 22 ± 2 °C；Relative Humidity：40 -70%								
Liquid Type	Frequency	Temp (°C)	Parameters	Target Value	Measured Value	Deviation (%)	Limit (%)	Measured Date
835MHz (Body)	829MHz	22.0	εr	55.22	55.33	0.20%	± 5	2014/09/25
			σ	0.970	0.982	1.24%	± 5	
	835MHz	22.0	εr	55.20	55.29	0.16%	± 5	
			σ	0.970	0.990	2.06%	± 5	
	837MHz	22.0	εr	55.19	55.31	0.22%	± 5	
			σ	0.972	0.992	2.06%	± 5	
	844MHz	22.0	εr	55.17	55.31	0.25%	± 5	
			σ	0.981	1.002	2.14%	± 5	
835MHz (Body)	829MHz	22.0	εr	55.22	55.33	0.20%	± 5	2014/09/26
			σ	0.970	0.982	1.24%	± 5	
	835MHz	22.0	εr	55.20	55.29	0.16%	± 5	
			σ	0.970	0.990	2.06%	± 5	
	837MHz	22.0	εr	55.19	55.31	0.22%	± 5	
			σ	0.972	0.992	2.06%	± 5	
	844MHz	22.0	εr	55.17	55.31	0.25%	± 5	
			σ	0.981	1.002	2.14%	± 5	
835MHz (Body)	826MHz	22.0	εr	55.24	55.32	0.15%	± 5	2014/11/07
			σ	0.969	0.980	1.14%	± 5	
	835MHz	22.0	εr	55.20	55.29	0.16%	± 5	
			σ	0.970	0.990	2.06%	± 5	
835MHz (Body)	824MHz	22.0	εr	55.24	55.32	0.15%	± 5	2014/12/12
			σ	0.969	0.978	0.93%	± 5	
	835MHz	22.0	εr	55.20	55.29	0.16%	± 5	
			σ	0.970	0.990	2.06%	± 5	

Table 5. Measured Tissue dielectric parameters for body phantoms -2

Liquid Verify								
Ambient Temperature： 22 ± 2 °C；Relative Humidity：40 -70%								
Liquid Type	Frequency	Temp (°C)	Parameters	Target Value	Measured Value	Deviation (%)	Limit (%)	Measured Date
1750MHz (Body)	1712MHz	22.0	εr	53.53	54.53	1.87%	± 5	2014/09/26
			σ	1.464	1.486	1.50%	± 5	
	1720MHz	22.0	εr	53.51	54.55	1.94%	± 5	
			σ	1.469	1.494	1.70%	± 5	
	1733MHz	22.0	εr	53.48	54.61	2.11%	± 5	
			σ	1.478	1.506	1.89%	± 5	
	1750MHz	22.0	εr	53.43	54.71	2.40%	± 5	
			σ	1.488	1.517	1.95%	± 5	
1750MHz (Body)	1720MHz	22.0	εr	53.51	54.55	1.94%	± 5	2014/09/29
			σ	1.469	1.494	1.70%	± 5	
	1750MHz	22.0	εr	53.43	54.71	2.40%	± 5	
			σ	1.488	1.517	1.95%	± 5	
1900MHz (Body)	1850MHz	22.0	εr	53.30	52.36	-1.76%	± 5	2014/09/27
			σ	1.520	1.456	-4.21%	± 5	
	1860MHz	22.0	εr	53.30	52.50	-1.50%	± 5	
			σ	1.520	1.461	-3.88%	± 5	
	1880MHz	22.0	εr	53.30	52.64	-1.24%	± 5	
			σ	1.520	1.458	-4.08%	± 5	
	1900MHz	22.0	εr	53.30	52.46	-1.58%	± 5	
			σ	1.520	1.475	-2.96%	± 5	
1900MHz (Body)	1850MHz	22.0	εr	53.30	52.36	-1.76%	± 5	2014/11/12
			σ	1.520	1.456	-4.21%	± 5	
	1860MHz	22.0	εr	53.30	52.50	-1.50%	± 5	
			σ	1.520	1.461	-3.88%	± 5	
	1880MHz	22.0	εr	53.30	52.64	-1.24%	± 5	
			σ	1.520	1.458	-4.08%	± 5	
	1900MHz	22.0	εr	53.30	52.46	-1.58%	± 5	
			σ	1.520	1.475	-2.96%	± 5	

Table 6. Measured Tissue dielectric parameters for body phantoms -3

©2014 A Test Lab Techno Corp.

Liquid Verify								
Ambient Temperature： 22 ± 2 °C；Relative Humidity：40 -70%								
Liquid Type	Frequency	Temp (°C)	Parameters	Target Value	Measured Value	Deviation (%)	Limit (%)	Measured Date
1900MHz (Body)	1850MHz	22.0	εr	53.30	52.36	-1.76%	± 5	2014/12/12
			σ	1.520	1.456	-4.21%	± 5	
	1880MHz	22.0	εr	53.30	52.64	-1.24%	± 5	
			σ	1.520	1.458	-4.08%	± 5	
	1900MHz	22.0	εr	53.30	52.46	-1.58%	± 5	
			σ	1.520	1.475	-2.96%	± 5	
	1910MHz	22.0	εr	53.30	52.29	-1.90%	± 5	
			σ	1.520	1.496	-1.58%	± 5	
2450MHz (Body)	2412MHz	22.0	εr	52.75	53.98	2.33%	± 5	2014/09/24
			σ	1.914	1.927	0.68%	± 5	
	2437MHz	22.0	εr	52.72	54.30	3.00%	± 5	
			σ	1.938	1.988	2.58%	± 5	
	2450MHz	22.0	εr	52.70	54.46	3.34%	± 5	
			σ	1.950	1.980	1.54%	± 5	
2600MHz (Body)	2510MHz	22.0	εr	52.62	51.58	-1.98%	± 5	2014/11/13
			σ	2.035	2.117	4.03%	± 5	
	2535MHz	22.0	εr	52.59	51.53	-2.02%	± 5	
			σ	2.071	2.147	3.67%	± 5	
	2560MHz	22.0	εr	52.56	51.47	-2.07%	± 5	
			σ	2.106	2.178	3.42%	± 5	
	2600MHz	22.0	εr	52.51	51.31	-2.29%	± 5	
			σ	2.163	2.228	3.01%	± 5	
2600MHz (Body)	2510MHz	22.0	εr	52.62	51.58	-1.98%	± 5	2014/11/14
			σ	2.035	2.117	4.03%	± 5	
	2535MHz	22.0	εr	52.59	51.53	-2.02%	± 5	
			σ	2.071	2.147	3.67%	± 5	
	2560MHz	22.0	εr	52.56	51.47	-2.07%	± 5	
			σ	2.106	2.178	3.42%	± 5	
	2600MHz	22.0	εr	52.51	51.31	-2.29%	± 5	
			σ	2.163	2.228	3.01%	± 5	

Table 7. Measured Tissue dielectric parameters for body phantoms -3

©2014 A Test Lab Techno Corp.

Liquid Verify								
Ambient Temperature： 22 ± 2 °C；Relative Humidity：40 -70%								
Liquid Type	Frequency	Temp (°C)	Parameters	Target Value	Measured Value	Deviation (%)	Limit (%)	Measured Date
2600MHz (Body)	2510MHz	22.0	εr	52.62	51.58	-1.98%	± 5	2014/11/15
			σ	2.035	2.117	4.03%	± 5	
	2535MHz	22.0	εr	52.59	51.53	-2.02%	± 5	
			σ	2.071	2.147	3.67%	± 5	
	2560MHz	22.0	εr	52.56	51.47	-2.07%	± 5	
			σ	2.106	2.178	3.42%	± 5	
	2600MHz	22.0	εr	52.51	51.31	-2.29%	± 5	
			σ	2.163	2.228	3.01%	± 5	
5200MHz (Body)	5200MHz	22.0	εr	49.01	47.76	-2.55%	± 5	2014/11/07
			σ	5.299	5.520	4.17%	± 5	
	5220MHz	22.0	εr	48.99	47.71	-2.61%	± 5	
			σ	5.323	5.510	3.51%	± 5	
5200MHz (Body)	5200MHz	22.0	εr	49.01	47.76	-2.55%	± 5	2014/11/10
			σ	5.299	5.520	4.17%	± 5	
	5220MHz	22.0	εr	48.99	47.71	-2.61%	± 5	
			σ	5.323	5.510	3.51%	± 5	
5800MHz (Body)	5745MHz	22.0	εr	48.27	46.55	-3.56%	± 5	2014/11/10
			σ	5.936	6.200	4.45%	± 5	
	5765MHz	22.0	εr	48.25	46.50	-3.63%	± 5	
			σ	5.959	6.228	4.51%	± 5	
	5800MHz	22.0	εr	48.20	46.40	-3.73%	± 5	
			σ	6.000	6.270	4.50%	± 5	
5800MHz (Body)	5745MHz	22.0	εr	48.27	46.55	-3.56%	± 5	2014/11/11
			σ	5.936	6.200	4.45%	± 5	
	5765MHz	22.0	εr	48.25	46.50	-3.63%	± 5	
			σ	5.959	6.228	4.51%	± 5	
	5800MHz	22.0	εr	48.20	46.40	-3.73%	± 5	
			σ	6.000	6.270	4.50%	± 5	

Table 8. Measured Tissue dielectric parameters for body phantoms -3

©2014 A Test Lab Techno Corp.

7.3 Verification Summary

Prior to the assessment, the system validation kit was used to test whether the system was operating within its specifications of ± 7%. The verification was performed at 750, 835, 1750, 1900, 2450, 2600, 5200 and 5800MHz.

Mixture Type	Frequency (MHz)	Power	SAR_{1g} (W/Kg)	SAR_{10g} (W/Kg)	Drift (dB)	Difference percentage		Probe	Dipole	1W Target		Date
						1g	10g	Model / Serial No.	Model / Serial No.	SAR_{1g} (W/Kg)	SAR_{10g} (W/Kg)	
Body	750	250 mW	2.07	1.35	-0.06	-4.30%	-4.60%	EX3DV4 SN:3977	D750V3 SN:1004	8.65	5.66	Oct. 01, 2014
		Normalize to 1 Watt	8.28	5.40								
Body	750	250 mW	2.11	1.36	-0.04	-2.40%	-3.90%	EX3DV4 SN:3977	D750V3 SN:1004	8.65	5.66	Nov. 16, 2014
		Normalize to 1 Watt	8.44	5.44								
Body	750	250 mW	2.22	1.43	0	2.70%	1.10%	EX3DV4 SN:3977	D750V3 SN:1004	8.65	5.66	Nov. 17, 2014
		Normalize to 1 Watt	8.88	5.72								
Body	835	250 mW	2.36	1.56	-0.19	-0.60%	-0.50%	EX3DV4 SN:3977	D835V2 SN:4d082	9.50	6.27	Sep. 25, 2014
		Normalize to 1 Watt	9.44	6.24								
Body	835	250 mW	2.34	1.55	-0.04	-1.50%	-1.10%	EX3DV4 SN:3977	D835V2 SN:4d082	9.50	6.27	Sep. 26, 2014
		Normalize to 1 Watt	9.36	6.20								
Body	835	250 mW	2.32	1.53	-0.11	-2.30%	-2.40%	EX3DV4 SN:3977	D835V2 SN:4d082	9.50	6.27	Nov. 07, 2014
		Normalize to 1 Watt	9.28	6.12								
Body	835	250 mW	2.30	1.51	0	-3.20%	-3.70%	EX3DV4 SN:3977	D835V2 SN:4d082	9.50	6.27	Dec. 12, 2014
		Normalize to 1 Watt	9.20	6.04								
Body	1750	250 mW	9.27	4.86	0.05	-2.20%	-4.70%	EX3DV4 SN:3977	D1750V2 SN:1023	37.90	20.40	Sep. 26, 2014
		Normalize to 1 Watt	37.08	19.44								
Body	1750	250 mW	9.40	4.94	0.02	-0.80%	-3.10%	EX3DV4 SN:3977	D1750V2 SN:1023	37.90	20.40	Sep. 29, 2014
		Normalize to 1 Watt	37.60	19.76								
Body	1900	250 mW	10.00	5.18	0.09	-1.00%	-3.60%	EX3DV4 SN:3977	D1900V2 SN:5d111	40.40	21.50	Sep. 27, 2014
		Normalize to 1 Watt	40.00	20.72								
Body	1900	250 mW	10.30	5.32	0.09	2.00%	-1.00%	EX3DV4 SN:3977	D1900V2 SN:5d111	40.40	21.50	Nov. 12, 2014
		Normalize to 1 Watt	41.20	21.28								
Body	1900	250 mW	10.30	5.34	0.07	2.00%	-0.70%	EX3DV4 SN:3977	D1900V2 SN:5d111	40.40	21.50	Dec. 12, 2014
		Normalize to 1 Watt	41.20	21.36								
Body	2450	250 mW	12.80	5.96	0.05	1.80%	1.40%	EX3DV4 SN:3977	D2450V2 SN:712	50.30	23.50	Sep. 24, 2014
		Normalize to 1 Watt	51.20	23.84								

©2014 A Test Lab Techno Corp.

Mixture Type	Frequency (MHz)	Power	SAR_{1g} (W/Kg)	SAR_{10g} (W/Kg)	Drift (dB)	Difference percentage		Probe	Dipole	1W Target		Date
						1g	10g	Model / Serial No.	Model / Serial No.	SAR_{1g} (W/Kg)	SAR_{10g} (W/Kg)	
Body	2600	250 mW	14.50	6.27	0.11	2.30%	0.30%	EX3DV4 SN:3977	D2600V2 SN:1007	56.70	25.00	Nov. 13, 2014
		Normalize to 1 Watt	58.00	25.08								
Body	2600	250 mW	13.90	6.02	0.01	-1.90%	-3.70%	EX3DV4 SN:3977	D2600V2 SN:1007	56.70	25.00	Nov. 14, 2014
		Normalize to 1 Watt	55.60	24.08								
Body	2600	250 mW	14.00	6.07	-0.09	-1.20%	-2.90%	EX3DV4 SN:3977	D2600V2 SN:1007	56.70	25.00	Nov. 15,2014
		Normalize to 1 Watt	56.00	24.28								
Body	5200	250 mW	7.14	2.00	-0.11	-3.60%	-2.90%	EX3DV4 SN:3977	D5200V2 SN:1021	74.10	20.60	Nov. 07, 2014
		Normalize to 1 Watt	71.40	20.00								
Body	5200	250 mW	7.48	2.09	0.05	0.90%	1.50%	EX3DV4 SN:3977	D5200V2 SN:1021	74.10	20.60	Nov. 10, 2014
		Normalize to 1 Watt	74.80	20.90								
Body	5800	250 mW	7.31	2.04	-0.02	-1.30%	0.00%	EX3DV4 SN:3977	D5800V2 SN:1021	74.10	20.40	Nov. 10, 2014
		Normalize to 1 Watt	73.10	20.40								
Body	5800	250 mW	7.56	2.08	0.01	2.00%	2.00%	EX3DV4 SN:3977	D5800V2 SN:1021	74.10	20.40	Nov. 11, 2014
		Normalize to 1 Watt	75.60	20.80								

©2014 A Test Lab Techno Corp.

7.4 Validation Summary

Per FCC KDB 865664 D02v01r01, SAR system validation status should be documented to confirm measurement accuracy. The SAR systems (including SAR probes, system components and software versions) used for this device were validated against its performance specifications prior to the SAR measurements. Reference dipoles were used with the required tissue- equivalent media for system validation, according to the procedures outlined in IEEE 1528-2013 and FCC KDB 865664 D01v01r03. Since SAR probe calibrations are frequency dependent, each probe calibration point was validated at a frequency within the valid frequency range of the probe calibration point, using the system that normally operates with the probe for routine SAR measurements and according to the required tissue-equivalent media.

A tabulated summary of the system validation status including the validation date(s), measurement frequencies, SAR probes and tissue dielectric parameters as below.

Probe Type Model / Serial No.	Prob Cal. Point (MHz)	Head / Body	Cond.	Perm.	CW Validation			Mod. Validation			Date
			εr	σ	Sensitivity	Probe Linearity	Probe Isotropy	Mod. Type	Duty Factor	PAR	
EX3DV4 SN:3977	750	Body	53.57	0.983	Pass	Pass	Pass	GMSK	Pass	N/A	Oct. 01, 2014
EX3DV4 SN:3977	750	Body	53.57	0.983	Pass	Pass	Pass	GMSK	Pass	N/A	Nov. 16, 2014
EX3DV4 SN:3977	750	Body	53.57	0.983	Pass	Pass	Pass	GMSK	Pass	N/A	Nov. 17, 2014
EX3DV4 SN:3977	835	Body	55.29	0.990	Pass	Pass	Pass	GMSK	Pass	N/A	Sep. 25, 2014
EX3DV4 SN:3977	835	Body	55.29	0.990	Pass	Pass	Pass	GMSK	Pass	N/A	Sep. 26, 2014
EX3DV4 SN:3977	835	Body	55.29	0.990	Pass	Pass	Pass	GMSK	Pass	N/A	Nov. 07, 2014
EX3DV4 SN:3977	835	Body	55.29	0.990	Pass	Pass	Pass	GMSK	Pass	N/A	Dec. 12, 2014
EX3DV4 SN:3977	1750	Body	54.71	1.517	Pass	Pass	Pass	GMSK	Pass	N/A	Sep. 26, 2014
EX3DV4 SN:3977	1750	Body	54.71	1.517	Pass	Pass	Pass	GMSK	Pass	N/A	Sep. 29, 2014
EX3DV4 SN:3977	1900	Body	52.46	1.475	Pass	Pass	Pass	GMSK	Pass	N/A	Sep. 27, 2014
EX3DV4 SN:3977	1900	Body	52.46	1.475	Pass	Pass	Pass	GMSK	Pass	N/A	Nov. 12, 2014
EX3DV4 SN:3977	1900	Body	52.46	1.475	Pass	Pass	Pass	GMSK	Pass	N/A	Dec. 12, 2014
EX3DV4 SN:3977	2450	Body	54.46	1.980	Pass	Pass	Pass	OFDM	N/A	Pass	Sep. 24, 2014
EX3DV4 SN:3977	2600	Body	51.31	2.228	Pass	Pass	Pass	GMSK	Pass	N/A	Nov. 13, 2014
EX3DV4 SN:3977	2600	Body	51.31	2.228	Pass	Pass	Pass	GMSK	Pass	N/A	Nov. 14, 2014
EX3DV4 SN:3977	2600	Body	51.31	2.228	Pass	Pass	Pass	GMSK	Pass	N/A	Nov. 15, 2014
EX3DV4 SN:3977	5200	Body	47.76	5.520	Pass	Pass	Pass	OFDM	N/A	N/A	Nov. 07, 2014
EX3DV4 SN:3977	5200	Body	47.76	5.520	Pass	Pass	Pass	OFDM	N/A	N/A	Nov. 10, 2014
EX3DV4 SN:3977	5800	Body	46.40	6.270	Pass	Pass	Pass	OFDM	N/A	N/A	Nov. 10, 2014
EX3DV4 SN:3977	5800	Body	46.40	6.270	Pass	Pass	Pass	OFDM	N/A	N/A	Nov. 11, 2014

©2014 A Test Lab Techno Corp.

8. Test Equipment List

Manufacturer	Name of Equipment	Type/Model	Serial Number	Calibration	
				Last Cal.	Due Date
SPEAG	750MHz System Validation Kit	D750V2	1004	Jan. 28, 2014	Jan. 28, 2015
SPEAG	835MHz System Validation Kit	D835V2	4d082	Jul. 23, 2014	Jul. 23, 2015
SPEAG	1750MHz System Validation Kit	D1750V2	1023	Jun. 17, 2014	Jun. 17, 2015
SPEAG	1900MHz System Validation Kit	D1900V2	5d111	Jul. 23, 2014	Jul. 23, 2015
SPEAG	2450MHz System Validation Kit	D2450V2	712	Mar. 04, 2014	Mar. 04, 2015
SPEAG	2600MHz System Validation Kit	D2600V2	1007	Sep. 23, 2014	Sep. 23, 2015
SPEAG	5GHz System Validation Kit	D5GHZV2	1021	Feb. 21, 2013	Feb. 21, 2014
SPEAG	Dosimetric E-Field Probe	EX3DV4	3977	Feb. 17, 2014	Feb. 17, 2015
SPEAG	Data Acquisition Electronics	DAE4	712	Mar. 04, 2014	Mar. 04, 2015
SPEAG	Device Holder	N/A	N/A	NCR	
SPEAG	Measurement Server	SE UMS 011 AA	1025	NCR	
SPEAG	Phantom	ELI v5.0	TP-1133	NCR	
SPEAG	Robot	Staubli TX90XL	F07/564ZA1/C/01	NCR	
SPEAG	Software	DASY52 V52.8 (7)	N/A	NCR	
SPEAG	Software	SEMCAD X V14.6.10 (7164)	N/A	NCR	
Agilent	Dielectric Probe Kit	85070C	US99360094	NCR	
Agilent	ENA Series Network Analyzer	E5071B	MY42404655	Apr. 10, 2014	Apr. 10, 2015
R&S	Power Sensor	NRP-Z22	100179	May 20, 2014	May 20, 2015
Agilent	MXF-G-B RF Vector Signal Generator	N5182B	MY53050382	May 30, 2014	May 30, 2015
Agilent	Dual Directional Coupler	778D	50334	NCR	
Mini-Circuits	Power Amplifier	ZHL-42W-SMA	D111103#5	NCR	
Mini-Circuits	Power Amplifier	ZVE-8G-SMA	D042005 671800514	NCR	
Aisi	Attenuator	IEAT 3dB	N/A	NCR	

Table 9. Test Equipment List

9. Measurement Uncertainty

Measurement uncertainties in SAR measurements are difficult to quantify due to several variables including biological, physiological, and environmental. However, we estimate the measurement uncertainties in SAR to be less than ±19.62 %〔8〕. The frequency range of the measurement uncertainty is 750 ~ 5800MHz ±10.1 %

According to Std. C95.3〔9〕, the overall uncertainties are difficult to assess and will vary with the type of meter and usage situation. However, accuracy's of ±1 to 3 dB can be expected in practice, with greater uncertainties in near-field situations and at higher frequencies (shorter wavelengths), or areas where large reflecting objects are present. Under optimum measurement conditions, SAR measurement uncertainties of at least ±2dB can be expected.

©2014 A Test Lab Techno Corp.

Item	Uncertainty Component	Uncertainty Value	Prob. Dist	Div.	c_i (1g)	c_i (10g)	Std. Unc. （1-g）	Std. Unc. （10-g）	v_i or V_{eff}
Measurement System									
u1	Probe Calibration (k=1)	±5.05%	Normal	1	1	1	±5.05%	±5.05%	∞
u2	Probe Isotropy	±7.6%	Rectangular	$\sqrt{3}$	0.7	0.7	±3.1%	±3.1%	∞
u3	Boundary Effect	±1.0%	Rectangular	$\sqrt{3}$	1	1	±0.6%	±0.6%	∞
u4	Linearity	±4.7%	Rectangular	$\sqrt{3}$	1	1	±2.7%	±2.7%	∞
u5	System Detection Limit	±1.0%	Rectangular	$\sqrt{3}$	1	1	±0.58%	±0.58%	∞
u6	Readout Electronics	±0.3%	Normal	1	1	1	±0.3%	±0.3%	∞
u7	Response Time	±0.8%	Rectangular	$\sqrt{3}$	1	1	±0.5%	±0.5%	∞
u8	Integration Time	±2.6%	Rectangular	$\sqrt{3}$	1	1	±1.5%	±1.5%	∞
u9	RF Ambient Conditions	±0%	Rectangular	$\sqrt{3}$	1	1	±0%	±0%	∞
u10	RF Ambient Reflections	±0%	Rectangular	$\sqrt{3}$	1	1	±0%	±0%	∞
u11	Probe Positioner Mechanical Tolerance	±0.4%	Rectangular	$\sqrt{3}$	1	1	±0.2%	±0.2%	∞
u12	Probe Positioning with respect to Phantom Shell	±2.9%	Rectangular	$\sqrt{3}$	1	1	±1.7%	±1.7%	∞
u13	Extrapolation, interpolation and integration Algorithms for Max. SAR Evaluation	±1.0%	Rectangular	$\sqrt{3}$	1	1	±0.6%	±0.6%	∞
Test sample Related									
u14	Test sample Positioning	±3.6%	Normal	1	1	1	±3.6%	±3.6%	89
u15	Device Holder Uncertainty	±3.5%	Normal	1	1	1	±3.5%	±3.5%	5
u16	Output Power Variation - SAR drift measurement	±5.0%	Rectangular	$\sqrt{3}$	1	1	±2.9%	±2.9%	∞
Phantom and Tissue Parameters									
u17	Phantom Uncertainty (shape and thickness tolerances)	±4.0%	Rectangular	$\sqrt{3}$	1	1	±2.3%	±2.3%	∞
u18	Liquid Conductivity - deviation from target values	±5.0%	Rectangular	$\sqrt{3}$	0.64	0.43	±1.8%	±1.2%	∞
u19	Liquid Conductivity - measurement uncertainty	±1.93%	Normal	1	0.64	0.43	±1.24%	±0.83%	69
u20	Liquid Permittivity - deviation from target values	±5.0%	Rectangular	$\sqrt{3}$	0.6	0.49	±1.7%	±1.4%	∞
u21	Liquid Permittivity - measurement uncertainty	±1.4%	Normal	1	0.6	0.49	±0.84%	±1.69%	69
Combined standard uncertainty			RSS				±9.81%	±9.62%	313
Expanded uncertainty (95% CONFIDENCE LEVEL)			k=2				±19.62%	±19.24%	

Table 10. Uncertainty Budget of DASY

©2014 A Test Lab Techno Corp.

10. Measurement Procedure

The measurement procedures are as follows:

1. For WLAN function, engineering testing software installed on Notebook can provide continuous transmitting signal.
2. Measure output power through RF cable and power meter
3. Set scan area, grid size and other setting on the DASY software
4. Find out the largest SAR result on these testing positions of each band
5. Measure SAR results for other channels in worst SAR testing position if the SAR of highest power channel is larger than 0.8 W/kg

According to the test standard, the recommended procedure for assessing the peak spatial-average SAR value consists of the following steps:

1. Power reference measurement
2. Area scan
3. Zoom scan
4. Power drift measurement

10.1 Spatial Peak SAR Evaluation

The procedure for spatial peak SAR evaluation has been implemented according to the test standard. It can be conducted for 1g and 10g, as well as for user-specific masses. The DASY software includes all numerical procedures necessary to evaluate the spatial peak SAR value.
The base for the evaluation is a "cube" measurement. The measured volume must include the 1g and 10g cubes with the highest averaged SAR values. For that purpose, the center of the measured volume is aligned to the interpolated peak SAR value of a previously performed area scan.
The entire evaluation of the spatial peak values is performed within the post-processing engine (SEMCAD). The system always gives the maximum values for the 1g and 10g cubes. The algorithm to find the cube with highest averaged SAR is divided into the following stages

1. Extraction of the measured data (grid and values) from the Zoom Scan
2. Calculation of the SAR value at every measurement point based on all stored data (A/D values and measurement parameters)
3. Generation of a high-resolution mesh within the measured volume
4. Interpolation of all measured values form the measurement grid to the high-resolution grid
5. Extrapolation of the entire 3-D field distribution to the phantom surface over the distance from sensor to surface
6. Calculation of the averaged SAR within masses of 1g and 10g

©2014 A Test Lab Techno Corp.

10.2 Area & Zoom Scan Procedures

First Area Scan is used to locate the approximate location(s) of the local peak SAR value(s). The measurement grid within an Area Scan is defined by the grid extent, grid step size and grid offset. Next, in order to determine the EM field distribution in a three-dimensional spatial extension, Zoom Scan is required. The Zoom Scan measures points and step size follow as below. The Zoom Scan is performed around the highest E-field value to determine the averaged SAR-distribution over 10 g.

Grid Type	Frequency		Step size (mm)			X*Y*Z (Point)	Cube size			Step size		
			X	Y	Z		X	Y	Z	X	Y	Z
uniform grid	≦ 3GHz	≦2GHz	≤ 8	≤ 8	≤ 5	5*5*7	32	32	30	8	8	5
		2G - 3G	≤ 5	≤ 5	≤ 5	7*7*7	30	30	30	5	5	5
	3 - 6GHz	3 - 4GHz	≤ 5	≤ 5	≤ 4	7*7*8	30	30	28	5	5	4
		4 - 5GHz	≤ 4	≤ 4	≤ 3	8*8*10	28	28	27	4	4	3
		5 - 6GHz	≤ 4	≤ 4	≤ 2	8*8*12	28	28	22	4	4	2

(Our measure settings are refer KDB Publication 865664 D01v01r03)

10.3 Volume Scan Procedures

The volume scan is used for assess overlapping SAR distributions for antennas transmitting in different frequency bands. It is equivalent to an oversized zoom scan used in standalone measurements. The measurement volume will be used to enclose all the simultaneous transmitting antennas. For antennas transmitting simultaneously in different frequency bands, the volume scan is measured separately in each frequency band. In order to sum correctly to compute the 1g aggregate SAR, the DUT remain in the same test position for all measurements and all volume scan use the same spatial resolution and grid spacing. When all volume scan were completed, the software, SEMCAD postprocessor can combine and subsequently superpose these measurement data to calculating the multiband SAR.

10.4 SAR Averaged Methods

In DASY, the interpolation and extrapolation are both based on the modified Quadratic Shepard's method. The interpolation scheme combines a least-square fitted function method and a weighted average method which are the two basic types of computational interpolation and approximation. Extrapolation routines are used to obtain SAR values between the lowest measurement points and the inner phantom surface. The extrapolation distance is determined by the surface detection distance and the probe sensor offset. The uncertainty increases with the extrapolation distance. To keep the uncertainty within 1% for the 1 g and 10 g cubes, the extrapolation distance should not be larger than 5 mm.

10.5 Power Drift Monitoring

All SAR testing is under the DUT install full charged battery and transmit maximum output power. In DASY measurement software, the power reference measurement and power drift measurement procedures are used for monitoring the power drift of DUT during SAR test. Both these procedures measure the field at a specified reference position before and after the SAR testing. The software will calculate the field difference in dB. If the power drift more than 5%, the SAR will be retested.

©2014 A Test Lab Techno Corp.

11. SAR Test Results Summary

11.1 Head Measurement SAR

Evaluated head SAR is not available.

11.2 Body Measurement SAR

Evaluated body SAR refers to Hot-spot mode measurement results.

11.3 Hot-spot mode Measurement SAR

Index.	Position	Band	Ch.	Data Rate or Sub-Test	Side to Phantom	Spacing (mm)	SAR $_{1g}$ (W/Kg)	Power Drift	Burst Avg Power	Max tune-up	Reported SAR $_{1g}$ (W/Kg)
#1	Flat	GPRS 850	128	3D2U	1	10	0.635	0.10	30.48	31	0.716
#2	Flat	GPRS 850	128	3D2U	2	10	0.540	0.19	30.48	31	0.609
#3	Flat	GPRS 850	128	3D2U	3	10	0.195	0.01	30.48	31	0.220
#4	Flat	GPRS 850	128	3D2U	4	10	0.210	-0.01	30.48	31	0.237
#212	Flat	GPRS 850	128	3D2U	5	10	0.044	0.03	30.48	31	0.050
#5	Flat	GPRS 850	128	3D2U	6	10	0.157	0.01	30.48	31	0.177
#11	Flat	EGPRS 1900	512	1D4U	1	10	0.814	-0.08	26.33	27	0.950
#12	Flat	EGPRS 1900	512	1D4U	2	10	0.474	0.06	26.33	27	0.553
#13	Flat	EGPRS 1900	512	1D4U	3	10	0.114	0.14	26.33	27	0.133
#14	Flat	EGPRS 1900	512	1D4U	4	10	0.419	-0.02	26.33	27	0.489
#15	Flat	EGPRS 1900	512	1D4U	6	10	0.698	-0.03	26.33	27	0.814
#203	Flat	EGPRS 1900	661	1D4U	1	10	0.750	-0.07	26.12	27	0.918
#205	Flat	EGPRS 1900	661	1D4U	6	10	0.464	-0.04	26.12	27	0.568
#204	Flat	EGPRS 1900	810	1D4U	1	10	0.783	-0.04	26.09	27	0.966
#206	Flat	EGPRS 1900	810	1D4U	6	10	0.291	0.01	26.09	27	0.359

Note: 1. According KDB 447498 D01 V05r02 section 4.1.4, the “Reported” explanation as below:
“When SAR or MPE is measured at or scaled to the maximum tune-up tolerance limit, the results are referred to as reported.”

2. If the Channel's Reported SAR 1g of maximum conducted power is > 0.8 W/Kg, low, middle and high channel are supposed to be tested.(2G/3G/LTE/WLAN)

©2014 A Test Lab Techno Corp.

Index.	Position	Band	Ch.	Data Rate or Sub-Test	Side to Phantom	Spacing (mm)	SAR $_{1g}$ (W/Kg)	Power Drift	Burst Avg Power	Max tune-up	Reported SAR $_{1g}$ (W/Kg)
#21	Flat	WCDMA Band II	9262	RMC12.2K	1	10	0.744	-0.05	22.68	23.5	0.899
#22	Flat	WCDMA Band II	9400	RMC12.2K	1	10	0.835	0.10	22.62	23.5	1.023
#16	Flat	WCDMA Band II	9538	RMC12.2K	1	10	0.992	-0.04	22.91	23.5	1.136
#17	Flat	WCDMA Band II	9538	RMC12.2K	2	10	0.450	-0.01	22.91	23.5	0.515
#18	Flat	WCDMA Band II	9538	RMC12.2K	3	10	0.126	-0.05	22.91	23.5	0.144
#19	Flat	WCDMA Band II	9538	RMC12.2K	4	10	0.387	-0.11	22.91	23.5	0.443
#20	Flat	WCDMA Band II	9538	RMC12.2K	6	10	0.313	0.09	22.91	23.5	0.359
#28	Flat	WCDMA Band IV	1312	RMC12.2K	6	10	1.090	0.10	23.15	23.5	1.181
#29	Flat	WCDMA Band IV	1413	RMC12.2K	6	10	1.080	-0.02	23.30	23.5	1.131
#23	Flat	WCDMA Band IV	1513	RMC12.2K	1	10	0.722	0.16	23.37	23.5	0.744
#24	Flat	WCDMA Band IV	1513	RMC12.2K	2	10	0.442	0.07	23.37	23.5	0.455
#25	Flat	WCDMA Band IV	1513	RMC12.2K	3	10	0.103	0.04	23.37	23.5	0.106
#26	Flat	WCDMA Band IV	1513	RMC12.2K	4	10	0.421	0.19	23.37	23.5	0.434
#27	Flat	WCDMA Band IV	1513	RMC12.2K	6	10	1.020	0.03	23.37	23.5	1.051
#6	Flat	WCDMA Band V	1312	RMC12.2K	1	10	0.533	0.01	23.41	24.0	0.611
#7	Flat	WCDMA Band V	1413	RMC12.2K	2	10	0.431	-0.06	23.41	24.0	0.494
#8	Flat	WCDMA Band V	1513	RMC12.2K	3	10	0.176	0.01	23.41	24.0	0.202
#9	Flat	WCDMA Band V	1513	RMC12.2K	4	10	0.182	0.03	23.41	24.0	0.208
#10	Flat	WCDMA Band V	1513	RMC12.2K	6	10	0.142	-0.13	23.41	24.0	0.163

Note:
1. According KDB 447498 D01 V05r02 section 4.1.4, the “Reported” explanation as below:
   “When SAR or MPE is measured at or scaled to the maximum tune-up tolerance limit, the results are referred to as reported.”
2. HSDPA & (HSUPA HSPA+_QPSK UP Link) power are not more than WCDMA BII/BIV/BV 0.25dB and the SAR value of WCDMA BII/BV<1.2 W/kg ,therefore HSDPA & HSUPA Stand-alone SAR is not required.
3. If the Channel's Reported SAR 1g of maximum conducted power is > 0.8 W/Kg, low, middle and high channel are supposed to be tested.(2G/3G/LTE/WLAN)

©2014 A Test Lab Techno Corp.

Index.	Position	Band	Ch.	BW (MHz)	Modulation	RB		Side to Phantom	Spacing (mm)	SAR 1g (W/Kg)	Power Drift	Burst Avg Power	Max tune-up	Reported SAR 1g
						Size	Offset							
#33	Flat	LTE Band 2	18700	20	QPSK	1	0	1	10	0.897	-0.05	23.02	24.0	1.124
#34	Flat	LTE Band 2	18900	20	QPSK	1	0	1	10	0.961	-0.02	23.13	24.0	1.174
#32	Flat	LTE Band 2	19100	20	QPSK	1	0	1	10	1.080	-0.02	23.37	24.0	1.249
#36	Flat	LTE Band 2	19100	20	QPSK	1	0	2	10	0.437	-0.15	23.37	24.0	0.505
#38	Flat	LTE Band 2	19100	20	QPSK	1	0	3	10	0.115	-0.09	23.37	24.0	0.133
#40	Flat	LTE Band 2	19100	20	QPSK	1	0	4	10	0.359	0.19	23.37	24.0	0.415
#42	Flat	LTE Band 2	19100	20	QPSK	1	0	6	10	0.390	0.03	23.37	24.0	0.451
#35	Flat	LTE Band 2	19100	20	QPSK	50	0	1	10	0.695	-0.03	22.38	22.5	0.714
#37	Flat	LTE Band 2	19100	20	QPSK	50	0	2	10	0.336	-0.17	22.38	22.5	0.345
#39	Flat	LTE Band 2	19100	20	QPSK	50	0	3	10	0.091	-0.05	22.38	22.5	0.094
#41	Flat	LTE Band 2	19100	20	QPSK	50	0	4	10	0.304	0.01	22.38	22.5	0.313
#43	Flat	LTE Band 2	19100	20	QPSK	50	0	6	10	0.297	0.13	22.38	22.5	0.305
#44	Flat	LTE Band 2	19100	20	QPSK	100	0	1	10	1.050	-0.08	22.37	22.5	1.082
#50	Flat	LTE Band 4	20050	20	QPSK	1	0	6	10	1.370	0.13	23.60	23.8	1.435
#45	Flat	LTE Band 4	20300	20	QPSK	1	0	1	10	0.535	-0.19	23.64	23.8	0.555
#46	Flat	LTE Band 4	20300	20	QPSK	1	0	2	10	0.331	0.09	23.64	23.8	0.343
#47	Flat	LTE Band 4	20300	20	QPSK	1	0	3	10	0.079	-0.12	23.64	23.8	0.082
#48	Flat	LTE Band 4	20300	20	QPSK	1	0	4	10	0.307	0.03	23.64	23.8	0.319
#49	Flat	LTE Band 4	20300	20	QPSK	1	0	6	10	1.300	0.11	23.64	23.8	1.349
#51	Flat	LTE Band 4	20175	20	QPSK	1	0	6	10	1.290	0.18	23.54	23.8	1.370
#57	Flat	LTE Band 4	20050	20	QPSK	50	0	6	10	0.999	0.11	22.64	23.0	1.085
#58	Flat	LTE Band 4	20175	20	QPSK	50	0	6	10	0.940	-0.13	22.70	23.0	1.007
#52	Flat	LTE Band 4	20300	20	QPSK	50	0	1	10	0.523	-0.16	22.74	23.0	0.555
#53	Flat	LTE Band 4	20300	20	QPSK	50	0	2	10	0.306	-0.16	22.74	23.0	0.325
#54	Flat	LTE Band 4	20300	20	QPSK	50	0	3	10	0.067	0.17	22.74	23.0	0.071

Note:
1. According KDB 447498 D01 V05r02 section 4.1.4, the “Reported” explanation as below:
   “When SAR or MPE is measured at or scaled to the maximum tune-up tolerance limit, the results are referred to as reported.”
2. When the highest reported SAR for 1 RB and 50% RB allocation are > 0.8 W/kg,SAR is measured for the highest output power channel in 100%RB.
3. Start with the largest channel bandwidth and measure SAR for QPSK with 1 RB allocation, using the RB offset and required test channel combination with the highest maximum output power for RB offsets at the upper edge,middle and lower edge of each required test channel.
4. If the Channel's Reported SAR 1g of maximum conducted power is > 0.8 W/Kg, low, middle and high channel are supposed to be tested.(2G/3G/LTE/WLAN)

©2014 A Test Lab Techno Corp.

Index.	Position	Band	Ch.	BW (MHz)	Modulation	RB		Side to Phantom	Spacing (mm)	SAR 1g (W/Kg)	Power Drift	Burst Avg Power	Max tune-up	Reported SAR 1g
						Size	Offset							
#55	Flat	LTE Band 4	20300	20	QPSK	50	0	4	10	0.262	0.07	22.74	23.0	0.278
#56	Flat	LTE Band 4	20300	20	QPSK	50	0	6	10	0.929	0.15	22.74	23.0	0.986
#59	Flat	LTE Band 4	20300	20	QPSK	100	0	6	10	1.090	0.11	22.71	23.0	1.165
#60	Flat	LTE Band 5	20450	10	QPSK	1	0	1	10	0.988	-0.02	22.77	24.0	1.311
#63	Flat	LTE Band 5	20450	10	QPSK	1	0	2	10	0.829	-0.04	22.77	24.0	1.100
#66	Flat	LTE Band 5	20450	10	QPSK	1	0	3	10	0.328	0.00	22.77	24.0	0.435
#67	Flat	LTE Band 5	20450	10	QPSK	1	0	4	10	0.421	-0.01	22.77	24.0	0.559
#68	Flat	LTE Band 5	20450	10	QPSK	1	0	6	10	0.143	-0.06	22.77	24.0	0.190
#61	Flat	LTE Band 5	20525	10	QPSK	1	0	1	10	0.928	-0.02	22.67	24.0	1.261
#64	Flat	LTE Band 5	20525	10	QPSK	1	0	2	10	0.789	-0.06	22.67	24.0	1.072
#62	Flat	LTE Band 5	20600	10	QPSK	1	0	1	10	0.828	-0.04	22.55	24.0	1.156
#65	Flat	LTE Band 5	20600	10	QPSK	1	0	2	10	0.711	0.00	22.55	24.0	0.993
#69	Flat	LTE Band 5	20450	10	QPSK	25	0	1	10	0.760	-0.03	21.67	22.0	0.820
#72	Flat	LTE Band 5	20450	10	QPSK	25	0	2	10	0.635	0.02	21.67	22.0	0.685
#73	Flat	LTE Band 5	20450	10	QPSK	25	0	3	10	0.252	0.03	21.67	22.0	0.272
#74	Flat	LTE Band 5	20450	10	QPSK	25	0	4	10	0.322	0.03	21.67	22.0	0.347
#75	Flat	LTE Band 5	20450	10	QPSK	25	0	6	10	0.107	-0.01	21.67	22.0	0.115
#70	Flat	LTE Band 5	20525	10	QPSK	25	0	1	10	0.677	-0.02	21.43	22.0	0.772
#71	Flat	LTE Band 5	20600	10	QPSK	25	0	1	10	0.635	-0.02	21.40	22.0	0.729
#76	Flat	LTE Band 5	20450	10	QPSK	50	0	1	10	0.732	-0.03	21.52	22.0	0.818
#194	Flat	LTE Band 5	20450	10	QPSK	50	0	2	10	0.674	0.02	21.52	22.0	0.753
#92	Flat	LTE Band 7	20850	20	QPSK	1	0	1	10	0.873	-0.05	22.98	23.0	0.877
#95	Flat	LTE Band 7	20850	20	QPSK	1	0	2	10	0.844	-0.15	22.98	23.0	0.848
#98	Flat	LTE Band 7	20850	20	QPSK	1	0	3	10	0.513	0.08	22.98	23.0	0.515
#99	Flat	LTE Band 7	20850	20	QPSK	1	0	4	10	0.447	0.01	22.98	23.0	0.449

Note:
1. According KDB 447498 D01 V05r02 section 4.1.4, the "Reported" explanation as below:
   "When SAR or MPE is measured at or scaled to the maximum tune-up tolerance limit, the results are referred to as reported."
2. When the highest reported SAR for 1 RB and 50% RB allocation are > 0.8 W/kg,SAR is measured for the highest output power channel in 100%RB.
3. Start with the largest channel bandwidth and measure SAR for QPSK with 1 RB allocation, using the RB offset and required test channel combination with the highest maximum output power for RB offsets at the upper edge,middle and lower edge of each required test channel.
4. If the Channel's Reported SAR 1g of maximum conducted power is > 0.8 W/Kg, low, middle and high channel are supposed to be tested.(2G/3G/LTE/WLAN)

©2014 A Test Lab Techno Corp.

Index.	Position	Band	Ch.	BW (MHz)	Modulation	RB		Side to Phantom	Spacing (mm)	SAR 1g (W/Kg)	Power Drift	Burst Avg Power	Max tune-up	Reported SAR 1g
						Size	Offset							
#100	Flat	LTE Band 7	20850	20	QPSK	1	0	6	10	1.390	-0.08	22.98	23.0	1.396
#93	Flat	LTE Band 7	21100	20	QPSK	1	0	1	10	0.801	-0.09	22.96	23.0	0.808
#96	Flat	LTE Band 7	21100	20	QPSK	1	0	2	10	0.853	-0.08	22.96	23.0	0.861
#101	Flat	LTE Band 7	21100	20	QPSK	1	0	6	10	1.130	-0.02	22.96	23.0	1.140
#94	Flat	LTE Band 7	21350	20	QPSK	1	0	1	10	0.706	-0.11	22.89	23.0	0.724
#97	Flat	LTE Band 7	21350	20	QPSK	1	0	2	10	0.790	0.06	22.89	23.0	0.810
#102	Flat	LTE Band 7	21350	20	QPSK	1	0	6	10	1.140	-0.05	22.89	23.0	1.169
#172	Flat	LTE Band 7	20850	20	QPSK	50	0	6	10	0.925	0.03	21.86	22.0	0.955
#103	Flat	LTE Band 7	21100	20	QPSK	50	0	1	10	0.634	-0.13	21.89	22.0	0.650
#104	Flat	LTE Band 7	21100	20	QPSK	50	0	2	10	0.639	0.05	21.89	22.0	0.655
#105	Flat	LTE Band 7	21100	20	QPSK	50	0	3	10	0.377	-0.02	21.89	22.0	0.387
#106	Flat	LTE Band 7	21100	20	QPSK	50	0	4	10	0.421	0.01	21.89	22.0	0.432
#107	Flat	LTE Band 7	21100	20	QPSK	50	0	6	10	0.928	0.01	21.89	22.0	0.952
#173	Flat	LTE Band 7	21350	20	QPSK	50	0	6	10	1.030	-0.05	21.85	22.0	1.066
#108	Flat	LTE Band 7	21100	20	QPSK	100	0	1	10	0.735	-0.11	21.87	22.0	0.757
#109	Flat	LTE Band 7	21100	20	QPSK	100	0	2	10	0.642	0.11	21.87	22.0	0.662
#110	Flat	LTE Band 7	21100	20	QPSK	100	0	6	10	0.901	-0.05	21.87	22.0	0.928
#177	Flat	LTE Band 12	23060	10	QPSK	1	0	1	10	0.961	-0.03	22.84	24.0	1.255
#184	Flat	LTE Band 12	23060	10	QPSK	1	0	2	10	0.755	0.02	22.84	24.0	0.986
#111	Flat	LTE Band 12	23095	10	QPSK	1	0	1	10	0.955	-0.02	22.87	24.0	1.239
#112	Flat	LTE Band 12	23095	10	QPSK	1	0	2	10	0.783	0.11	22.87	24.0	1.016
#113	Flat	LTE Band 12	23095	10	QPSK	1	0	3	10	0.312	0.01	22.87	24.0	0.405
#114	Flat	LTE Band 12	23095	10	QPSK	1	0	4	10	0.333	0.03	22.87	24.0	0.432
#115	Flat	LTE Band 12	23095	10	QPSK	1	0	6	10	0.087	0.07	22.87	24.0	0.113
#178	Flat	LTE Band 12	23130	10	QPSK	1	0	1	10	0.993	-0.07	22.86	24.0	1.291

Note:
1. According KDB 447498 D01 V05r02 section 4.1.4, the “Reported” explanation as below:
   “When SAR or MPE is measured at or scaled to the maximum tune-up tolerance limit, the results are referred to as reported.”
2. When the highest reported SAR for 1 RB and 50% RB allocation are > 0.8 W/kg,SAR is measured for the highest output power channel in 100%RB.
3. Start with the largest channel bandwidth and measure SAR for QPSK with 1 RB allocation, using the RB offset and required test channel combination with the highest maximum output power for RB offsets at the upper edge,middle and lower edge of each required test channel.
4. If the Channel's Reported SAR 1g of maximum conducted power is > 0.8 W/Kg, low, middle and high channel are supposed to be tested.(2G/3G/LTE/WLAN)

©2014 A Test Lab Techno Corp.

Index.	Position	Band	Ch.	BW (MHz)	Modulation	RB		Side to Phantom	Spacing (mm)	SAR 1g (W/Kg)	Power Drift	Burst Avg Power	Max tune-up	Reported SAR 1g
						Size	Offset							
#185	Flat	LTE Band 12	23130	10	QPSK	1	0	2	10	0.813	0.03	22.86	24.0	1.057
#180	Flat	LTE Band 12	23060	10	QPSK	25	0	1	10	0.757	-0.02	21.83	22.0	0.787
#181	Flat	LTE Band 12	23095	10	QPSK	25	0	1	10	0.749	-0.10	21.79	22.0	0.786
#116	Flat	LTE Band 12	23130	10	QPSK	25	0	1	10	0.772	0.01	21.84	22.0	0.801
#117	Flat	LTE Band 12	23130	10	QPSK	25	0	2	10	0.630	0.02	21.84	22.0	0.654
#118	Flat	LTE Band 12	23130	10	QPSK	25	0	3	10	0.254	-0.02	21.84	22.0	0.264
#119	Flat	LTE Band 12	23130	10	QPSK	25	0	4	10	0.280	0.00	21.84	22.0	0.291
#120	Flat	LTE Band 12	23130	10	QPSK	25	0	6	10	0.068	0.11	21.84	22.0	0.071
#188	Flat	LTE Band 12	23060	10	QPSK	50	0	1	10	0.746	0.03	21.78	22.0	0.785
#190	Flat	LTE Band 12	23060	10	QPSK	50	0	2	10	0.613	0.04	21.78	22.0	0.645
#121	Flat	LTE Band 13	23230	10	QPSK	1	0	1	10	0.922	0.17	22.93	24.0	1.180
#122	Flat	LTE Band 13	23230	10	QPSK	1	0	2	10	0.620	-0.06	22.93	24.0	0.793
#123	Flat	LTE Band 13	23230	10	QPSK	1	0	3	10	0.205	-0.01	22.93	24.0	0.262
#124	Flat	LTE Band 13	23230	10	QPSK	1	0	4	10	0.157	0.10	22.93	24.0	0.201
#125	Flat	LTE Band 13	23230	10	QPSK	1	0	6	10	0.202	0.06	22.93	24.0	0.258
#126	Flat	LTE Band 13	23230	10	QPSK	25	0	1	10	0.726	-0.12	21.94	22.0	0.736
#127	Flat	LTE Band 13	23230	10	QPSK	25	0	2	10	0.510	0.06	21.94	22.0	0.517
#128	Flat	LTE Band 13	23230	10	QPSK	25	0	3	10	0.176	0.18	21.94	22.0	0.178
#129	Flat	LTE Band 13	23230	10	QPSK	25	0	4	10	0.137	0.05	21.94	22.0	0.139
#130	Flat	LTE Band 13	23230	10	QPSK	25	0	6	10	0.161	0.03	21.94	22.0	0.163
#179	Flat	LTE Band 13	23230	10	QPSK	50	0	1	10	0.812	0.11	21.91	22.0	0.829
#132	Flat	LTE Band 17	23780	10	QPSK	1	0	2	10	0.802	0.06	22.81	24.0	1.055
#133	Flat	LTE Band 17	23780	10	QPSK	1	0	3	10	0.318	-0.03	22.81	24.0	0.418
#134	Flat	LTE Band 17	23780	10	QPSK	1	0	4	10	0.351	0.01	22.81	24.0	0.462
#135	Flat	LTE Band 17	23780	10	QPSK	1	0	6	10	0.089	0.05	22.81	24.0	0.117

Note:
1. According KDB 447498 D01 V05r02 section 4.1.4, the “Reported” explanation as below:
   “When SAR or MPE is measured at or scaled to the maximum tune-up tolerance limit, the results are referred to as reported.”
2. When the highest reported SAR for 1 RB and 50% RB allocation are > 0.8 W/kg,SAR is measured for the highest output power channel in 100%RB.
3. Start with the largest channel bandwidth and measure SAR for QPSK with 1 RB allocation, using the RB offset and required test channel combination with the highest maximum output power for RB offsets at the upper edge,middle and lower edge of each required test channel.
4. If the Channel's Reported SAR 1g of maximum conducted power is > 0.8 W/Kg, low, middle and high channel are supposed to be tested.(2G/3G/LTE/WLAN)

©2014 A Test Lab Techno Corp.

Index.	Position	Band	Ch.	BW (MHz)	Modulation	RB		Side to Phantom	Spacing (mm)	SAR 1g (W/Kg)	Power Drift	Burst Avg Power	Max tune-up	Reported SAR 1g
						Size	Offset							
#131	Flat	LTE Band 17	23780	10	QPSK	1	0	1	10	0.980	-0.01	22.81	24.0	1.289
#182	Flat	LTE Band 17	23790	10	QPSK	1	0	1	10	0.964	-0.01	22.78	24.0	1.277
#186	Flat	LTE Band 17	23790	10	QPSK	1	0	2	10	0.786	0.01	22.78	24.0	1.041
#183	Flat	LTE Band 17	23800	10	QPSK	1	0	1	10	0.969	-0.03	22.77	24.0	1.286
#187	Flat	LTE Band 17	23800	10	QPSK	1	0	2	10	0.777	-0.02	22.77	24.0	1.031
#136	Flat	LTE Band 17	23790	10	QPSK	25	0	1	10	0.752	-0.03	21.82	22.0	0.784
#137	Flat	LTE Band 17	23790	10	QPSK	25	0	2	10	0.622	0.01	21.82	22.0	0.648
#138	Flat	LTE Band 17	23790	10	QPSK	25	0	3	10	0.247	-0.07	21.82	22.0	0.257
#139	Flat	LTE Band 17	23790	10	QPSK	25	0	4	10	0.280	-0.02	21.82	22.0	0.292
#140	Flat	LTE Band 17	23790	10	QPSK	25	0	6	10	0.069	-0.01	21.82	22.0	0.072
#189	Flat	LTE Band 17	23780	10	QPSK	50	0	1	10	0.762	-0.02	21.78	22.0	0.802
#191	Flat	LTE Band 17	23780	10	QPSK	50	0	2	10	0.623	0.00	21.78	22.0	0.655

Note:
1. According KDB 447498 D01 V05r02 section 4.1.4, the “Reported” explanation as below:
   “When SAR or MPE is measured at or scaled to the maximum tune-up tolerance limit, the results are referred to as reported.”
2. When the highest reported SAR for 1 RB and 50% RB allocation are > 0.8 W/kg,SAR is measured for the highest output power channel in 100%RB.
3. Start with the largest channel bandwidth and measure SAR for QPSK with 1 RB allocation, using the RB offset and required test channel combination with the highest maximum output power for RB offsets at the upper edge,middle and lower edge of each required test channel.
4. If the Channel's Reported SAR 1g of maximum conducted power is > 0.8 W/Kg, low, middle and high channel are supposed to be tested.(2G/3G/LTE/WLAN)

©2014 A Test Lab Techno Corp.

Index.	Position	Band	Ch.	Data Rate or Sub-Test	Side to Phantom	Spacing (mm)	SAR $_{1g}$ (W/Kg)	Power Drift	Burst Avg Power	Max tune-up	Reported SAR $_{1g}$
#148	Flat	IEEE 802.11b (MIMO)	1	1M	1	10	0.029	0.19	10.16	13	0.056
#213	Flat		1	1M	2	10	0.034	-0.10	10.16	13	0.065
#149	Flat		1	1M	3	10	0.040	0.15	10.16	13	0.077
#195	Flat		1	1M	6	10	0.002	0.13	10.16	13	0.004
#150	Flat	IEEE 802.11g (MIMO)	6	6M	1	10	0.033	-0.13	11.05	13	0.052
#151	Flat		6	6M	2	10	0.027	-0.04	11.05	13	0.042
#152	Flat		6	6M	3	10	0.025	-0.18	11.05	13	0.039
#196	Flat		6	6M	6	10	0.001	-0.03	11.05	13	0.001
#153	Flat	IEEE 802.11n 20MHz (MIMO)	6	13M	1	10	0.038	-0.02	11.16	13	0.058
#154	Flat		6	13M	2	10	0.028	0.05	11.16	13	0.043
#155	Flat		6	13M	3	10	0.023	0.17	11.16	13	0.035
#197	Flat		6	13M	6	10	0.002	0.14	11.16	13	0.002
#156	Flat	IEEE 802.11n 40MHz (MIMO)	6	27M	1	10	0.053	0.08	11.69	13	0.072
#157	Flat		6	27M	2	10	0.044	-0.02	11.69	13	0.059
#158	Flat		6	27M	3	10	0.034	0.12	11.69	13	0.046
#198	Flat		6	27M	6	10	0.001	-0.12	11.69	13	0.001
#160	Flat	IEEE 802.11a (MIMO)	40	6M	1	10	0.074	0.16	11.55	13	0.103
#161	Flat		40	6M	2	10	0.018	0.12	11.55	13	0.025
#162	Flat		40	6M	3	10	0.067	0.10	11.55	13	0.094
#199	Flat		40	6M	6	10	0.021	-0.13	11.55	13	0.029

Note:
1. According KDB 447498 D01 V05r02 section 4.1.4, the “Reported” explanation as below:
   “When SAR or MPE is measured at or scaled to the maximum tune-up tolerance limit, the results are referred to as reported.”
2. If the conducted power of (IEEE 802.11g / IEEE 802.11n20 / IEEE 802.11n40) are higher than IEEE 802.11b 0.25dB, (IEEE 802.11g / IEEE 802.11n20 / IEEE 802.11n40) are supposed to be tested.
3. If the conducted power of (IEEE 802.11n20(5G) / IEEE 802.11n40(5G)) are higher than IEEE 802.11a 0.25dB, (IEEE 802.11n20(5G) / IEEE 802.11n40(5G)) are supposed to be tested.
4. If the Channel's Reported SAR 1g of maximum conducted power is > 0.8 W/Kg, low, middle and high channel are supposed to be tested.(2G/3G/LTE/WLAN)

©2014 A Test Lab Techno Corp.

Index.	Position	Band	Ch.	Data Rate or Sub-Test	Side to Phantom	Spacing (mm)	SAR $_{1g}$ (W/Kg)	Power Drift	Burst Avg Power	Max tune-up	Reported SAR $_{1g}$
#163	Flat	IEEE 802.11a (MIMO)	44	6M	1	10	0.059	0.10	11.70	13	0.080
#164	Flat		44	6M	2	10	0.016	-0.09	11.70	13	0.022
#165	Flat		44	6M	3	10	0.060	0.04	11.70	13	0.081
#200	Flat		44	6M	6	10	0.022	-0.12	11.70	13	0.030
#166	Flat		149	6M	1	10	0.083	0.00	10.95	13	0.133
#167	Flat		149	6M	2	10	0.016	0.00	10.95	13	0.026
#168	Flat		149	6M	3	10	0.102	-0.10	10.95	13	0.164
#201	Flat		149	6M	6	10	0.000	-0.17	10.95	13	0.000
#169	Flat		153	6M	1	10	0.086	-0.14	10.96	13	0.138
#170	Flat		153	6M	2	10	0.016	0.00	10.96	13	0.026
#171	Flat		153	6M	3	10	0.081	-0.17	10.96	13	0.130
#202	Flat		153	6M	6	10	0.001	-0.12	10.96	13	0.002

Note: 1. According KDB 447498 D01 V05r02 section 4.1.4, the “Reported” explanation as below:
“When SAR or MPE is measured at or scaled to the maximum tune-up tolerance limit, the results are referred to as reported.”
2. If the conducted power of (IEEE 802.11n20(5G) / IEEE 802.11n40(5G)) are higher than IEEE 802.11a 0.25dB, (IEEE 802.11n20(5G) / IEEE 802.11n40(5G)) are supposed to be tested.
3. If the Channel's Reported SAR 1g of maximum conducted power is > 0.8 W/Kg, low, middle and high channel are supposed to be tested.(2G/3G/LTE/WLAN)

11.4 Extremity Measurement SAR

Evaluated extremity SAR is not available.

11.5 SAR Measurement Variability

Detailed evaluations please refer KDB 865664 on "SAR test reduction according to KDB" section.

Index.	Position	Band	Ch.	Test Mode or Sub-Test	Side to Phantom	Spacing (mm)	Number of times	SAR $_{1g}$ (W/Kg)	Power Drift	Burst Avg Power	Max tune-up	Reported SAR $_{1g}$ (W/Kg)	Repeated measure-ment Ratio
#207	Flat	EGPRS 1900	810	1D4U	1	10	1	0.721	-0.05	26.09	27.0	0.889	1.08 <1.2
#30	Flat	WCDMA Band II	9538	RMC12.2K	1	10	1	0.957	-0.02	22.91	23.5	1.096	1.04 < 1.2
#31	Flat	WCDMA Band IV	1312	RMC12.2K	6	10	1	1.070	0.17	23.15	23.5	1.160	1.02 < 1.2

Note: 1. According KDB 447498 D01 V05r02 section 4.1.4, the “Reported” explanation as below:
“When SAR or MPE is measured at or scaled to the maximum tune-up tolerance limit, the results are referred to as reported.”
2. The original highest measured Reported SAR 1g is ≥ 0.80 W/kg, repeat that measurement once.

©2014 A Test Lab Techno Corp.

Index.	Position	Band	Ch.	BW (MHz)	RB Size	RB Offset	Side to Phantom	Spacing (mm)	Number of times	SAR $_{1g}$ (W/Kg)	Power Drift	Burst Avg Power	Max tune-up	Reported SAR $_{1g}$ (W/Kg)	Repeated measure-ment Ratio
#141	Flat	LTE Band 2 (QPSK)	19100	20	1	0	1	10	1	1.040	0.12	23.37	24.0	1.202	1.04 < 1.2
#208	Flat	LTE Band 2 (QPSK)	19100	20	1	0	1	10	2	1.030	0.12	23.37	24.0	1.191	1.05 < 1.2
#142	Flat	LTE Band 4 (QPSK)	20050	20	1	0	6	10	1	1.340	0.06	23.56	23.8	1.416	1.02 < 1.2
#143	Flat	LTE Band 4 (QPSK)	20050	20	1	0	6	10	2	1.370	0.15	23.56	23.8	1.448	1 < 1.2
#144	Flat	LTE Band 4 (QPSK)	20050	20	1	0	6	10	3	1.350	0.16	23.56	23.8	1.427	1.01 < 1.2
#145	Flat	LTE Band 5 (QPSK)	20450	10	1	0	1	10	1	0.950	-0.03	22.77	24.0	1.261	1.04 < 1.2
#209	Flat	LTE Band 5 (QPSK)	20450	10	1	0	1	10	2	0.947	-0.03	22.77	24.0	1.257	1.04 < 1.2
#146	Flat	LTE Band 7 (QPSK)	20850	20	1	0	6	10	1	1.230	-0.01	22.98	23.0	1.236	1.13 < 1.2
#147	Flat	LTE Band 7 (QPSK)	20850	20	1	0	6	10	2	1.240	-0.03	22.98	23.0	1.246	1.12 < 1.2
#192	Flat	LTE Band 12 (QPSK)	23130	10	1	0	1	10	1	0.982	-0.05	22.86	24.0	1.277	1.01< 1.2
#210	Flat	LTE Band 12 (QPSK)	23130	10	1	0	1	10	2	0.980	-0.05	22.86	24.0	1.274	1.01< 1.2
#159	Flat	LTE Band 13 (QPSK)	23230	10	1	0	1	10	1	0.950	-0.17	22.93	24.0	1.215	1.03 < 1.2
#193	Flat	LTE Band 17 (QPSK)	23780	10	1	0	1	10	1	0.995	-0.03	22.81	24.0	1.309	1.01< 1.2
#211	Flat	LTE Band 17 (QPSK)	23780	10	1	0	1	10	2	0.992	-0.03	22.81	24.0	1.305	1.01< 1.2

Note:
1. According KDB 447498 D01 V05r02 section 4.1.4, the "Reported" explanation as below:
   "When SAR or MPE is measured at or scaled to the maximum tune-up tolerance limit, the results are referred to as reported."
2. The original highest measured Reported SAR 1g is ≥ 0.80 W/kg, repeat that measurement once.
3. The original highest measured Reported SAR 1g is ≥ 1.2 W/kg, repeat that measurement twice.
4. The original highest measured Reported SAR 1g is ≥ 1.4 W/kg, repeat that measurement third.

©2014 A Test Lab Techno Corp.

11.6 Std. C95.1-1999 RF Exposure Limit

Human Exposure	Population Uncontrolled Exposure (W/kg) or (mW/g)	Occupational Controlled Exposure (W/kg) or (mW/g)
Spatial Peak SAR* (head)	1.60	8.00
Spatial Peak SAR** (Whole Body)	0.08	0.40
Spatial Peak SAR*** (Partial-Body)	1.60	8.00
Spatial Peak SAR**** (Hands / Feet / Ankle / Wrist)	4.00	20.00

4. Safety Limits for Partial Body Exposure

Notes：

* The Spatial Peak value of the SAR averaged over any 1 gram of tissue.
(defined as a tissue volume in the shape of a cube) and over the appropriate averaging time.

** The Spatial Average value of the SAR averaged over the whole – body.

*** The Spatial Average value of the SAR averaged over the partial – body.

**** The Spatial Peak value of the SAR averaged over any 10 grams of tissue.
(defined as a tissue volume in the shape of a cube) and over the appropriate averaging time.

Population / Uncontrolled Environments：are defined as locations where there is the exposure of individuals who have no knowledge or control of their exposure.

Occupational / Controlled Environments：are defined as locations where there is exposure that may be incurred by persons who are aware of the potential for exposure, (i.e. as a result of employment or occupation).

©2014 A Test Lab Techno Corp.

12. Conclusion

The SAR test values found for the portable mobile phone **Netgear Inc. Trade Name：Netgear Model(s)：AC785S-500** is below the maximum recommended level of 1.6 W/kg (mW/g).

13. References

[1] Std. C95.1-1999, "*American National Standard safety levels with respect to human exposure to radio frequency electromagnetic fields, 300KHz to 100GHz",* New York.

[2] NCRP, National Council on Radiation Protection and Measurements, "Biological Effects and Exposure Criteria for Radio frequency Electromagnetic Fields", NCRP report NO. 86, 1986.

[3] T. Schmid, O. Egger, and N. Kuster, "Automatic E-field scanning system for dosimetric assessments", IEEE Transactions on Microwave Theory and Techniques, vol. 44, pp, 105-113, Jan. 1996.

[4] K. Pokovi ć, T. Schmid, and N. Kuster, "Robust setup for precise calibration of E-field probes in tissue simulating liquids at mobile communications frequency", in ICECOM'97, Dubrovnik, October 15-17, 1997, pp.120-124.

[5] K. Pokovi ć, T. Schmid, and N. Kuster, "E-field probe with improved isotropy in brain simulating liquids", in Proceedings of the ELMAR, Zadar, Croatia, 23-25 June, 1996, pp.172-175.

[6] N. Kuster, and Q. Balzano, "Energy absorption mechanism by biological bodies in the near field of dipole antennas above 300MHz", IEEE Transaction on Vehicular Technology, vol. 41, no. 1, Feb. 1992, pp. 17-23.

[7] Robert J. Renka, "Multivariate Interpolation Of Large Sets Of Scattered Data", University of North Texas ACM Transactions on Mathematical Software, vol. 14, no. 2, June 1988 , pp. 139-148.

[8] N. Kuster, R. Kastle, T. Schmid, Dosimetric evaluation of mobile communications equipment with known precision, IEEE Transaction on Communications, vol. E80-B, no. 5, May 1997, pp. 645-652.

[9] Std. C95.3-1991, "IEEE Recommended Practice for the Measurement of Potentially Hazardous Electromagnetic Fields – RF and Microwave, New York: IEEE, Aug. 1992.

[10] CENELEC CLC/SC111B, European Prestandard (prENV 50166-2), Human Exposure to Electromagnetic Fields High-frequency: 10KHz-300GHz, Jan. 1995.

[11] IEEE Std 1528™-2013 - IEEE Recommended Practice for Determining the Peak Spatial-Average Specific Absorption Rate (SAR) in the Human Head From Wireless Communications Devices: Measurement Techniques

[12] IEEE Std 1528a™-2005 (Amendment to IEEE Std 1528™-2013), IEEE Recommended Practice for Determining the Peak Spatial-Average Specific Absorption Rate (SAR) in the Human Head from Wireless Communications Devices: Measurement Techniques

14. SAR Measurement Guidance

[1] KDB 865664 D01 SAR measurement 100 MHz to 6 GHz v01r03

[2] KDB 447498 D01 General RF Exposure Guidance v05r02

[3] KDB 248227 D01 SAR meas for 802 11 a b g v01r02.

[4] KDB 941225 D01 3G SAR Procedures v03

[5] KDB 941225 D05 SAR for LTE Devices v02r03

[6] KDB 941225 D06 Hotspot Mode v02

[7]

Appendix A - System Performance Check

Test Laboratory: A Test Lab Techno Corp.
Date: 2014/10/1Time: PM 01:50:53
System Performance Check at 750MHz_20141001_Body
DUT: Dipole 750 MHz;Type: D750V3;Serial: D750V3 - SN:1004
Communication System: UID 0, CW (0);Frequency: 750 MHz;Duty Cycle: 1:1
Medium parameters used: f = 750 MHz; σ = 0.978 S/m; ε_r = 53.76; ρ = 1000 kg/m^3
Phantom section: Flat Section
Measurement Standard: DASY5 (IEEE/IEC/ANSI C63.19-2011)
DASY Configuration:

- Area Scan setting - Find Secondary Maximum Within:2.0dB and with a peak SAR value greater than 0.5 W/Kg
- Probe: EX3DV4 - SN3977;ConvF(9.78, 9.78, 9.78); Calibrated: 2014/2/17;
- Sensor-Surface: 2mm (Mechanical Surface Detection)
- Electronics: DAE4 Sn779;Calibrated: 2014/2/25
- Phantom: ELI v5.0;Type: QDOVA002AA;Serial: TP:1133
- Measurement SW: DASY52, Version 52.8 (7);SEMCAD X Version 14.6.10 (7164)

System Performance Check at 750MHz/Area Scan (61x121x1):
Interpolated grid: dx=1.500 mm, dy=1.500 mm
Maximum value of SAR (interpolated) = 2.65 W/kg

System Performance Check at 750MHz/Zoom Scan (7x7x7)/Cube 0:
Measurement grid: dx=5mm, dy=5mm, dz=5mm
Reference Value = 52.959 V/m; Power Drift = -0.06 dB
Peak SAR (extrapolated) = 3.12 W/kg
SAR(1 g) = 2.07 W/kg; SAR(10 g) = 1.35 W/kg
Maximum value of SAR (measured) = 2.64 W/kg

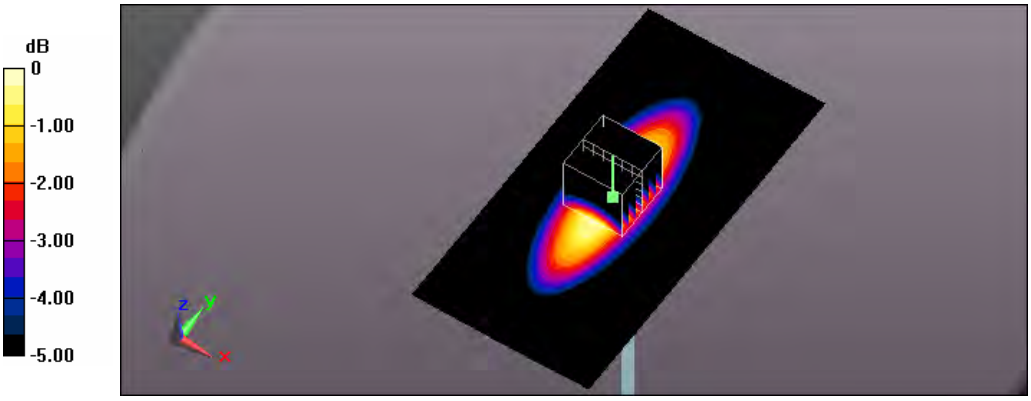

0 dB = 2.64 W/kg = 4.22 dBW/kg

Test Laboratory: A Test Lab Techno Corp.
Date: 2014/11/16Time: AM 09:34:57
System Performance Check at 750MHz_20141116_Body
DUT: Dipole 750 MHz;Type: D750V3;Serial: D750V3 - SN:1004
Communication System: UID 0, CW (0);Frequency: 750 MHz;Duty Cycle: 1:1
Medium parameters used: f = 750 MHz; σ = 0.983 S/m; εr = 53.573; ρ = 1000 kg/m3
Phantom section: Flat Section
Measurement Standard: DASY5 (IEEE/IEC/ANSI C63.19-2011)
DASY Configuration:

- Area Scan setting - Find Secondary Maximum Within:2.0dB and with a peak SAR value greater than 0.5 W/Kg
- Probe: EX3DV4 - SN3977;ConvF(9.78, 9.78, 9.78); Calibrated: 2014/2/17;
- Sensor-Surface: 2mm (Mechanical Surface Detection)
- Electronics: DAE4 Sn779;Calibrated: 2014/2/25
- Phantom: ELI v5.0;Type: QDOVA002AA;Serial: TP:1133
- Measurement SW: DASY52, Version 52.8 (7);SEMCAD X Version 14.6.10 (7164)

System Performance Check at 750MHz/Area Scan (61x121x1):
Interpolated grid: dx=1.500 mm, dy=1.500 mm
Maximum value of SAR (interpolated) = 2.72 W/kg

System Performance Check at 750MHz/Zoom Scan (7x7x7)/Cube 0:
Measurement grid: dx=5mm, dy=5mm, dz=5mm
Reference Value = 53.874 V/m; Power Drift = -0.04 dB
Peak SAR (extrapolated) = 3.22 W/kg
SAR(1 g) = 2.11 W/kg; SAR(10 g) = 1.36 W/kg
Maximum value of SAR (measured) = 2.71 W/kg

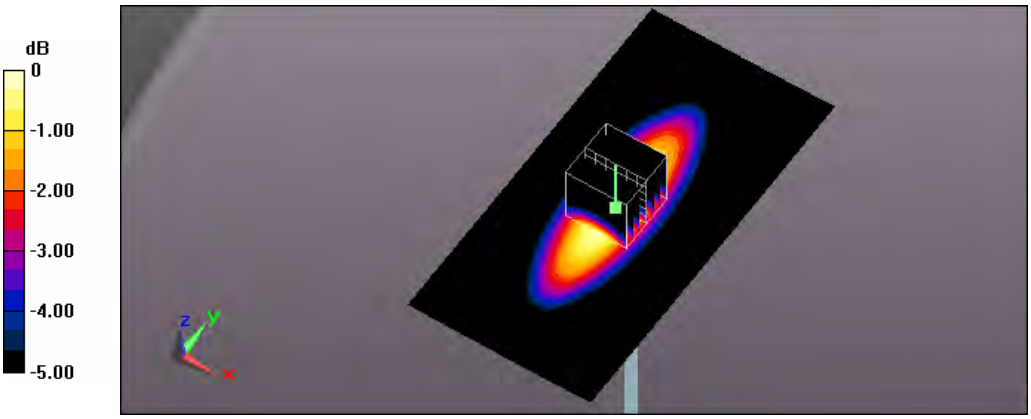

0 dB = 2.71 W/kg = 4.33 dBW/kg

Test Laboratory: A Test Lab Techno Corp.
Date: 2014/11/17Time: AM 11:14:02
System Performance Check at 750MHz_20141117_Body
DUT: Dipole 750 MHz;Type: D750V3;Serial: D750V3 - SN:1004
Communication System: UID 0, CW (0);Frequency: 750 MHz;Duty Cycle: 1:1
Medium parameters used: f = 750 MHz; σ = 0.983 S/m; εr = 53.573; ρ = 1000 kg/m3
Phantom section: Flat Section
Measurement Standard: DASY5 (IEEE/IEC/ANSI C63.19-2011)
DASY Configuration:

- Area Scan setting - Find Secondary Maximum Within:2.0dB and with a peak SAR value greater than 0.5 W/Kg
- Probe: EX3DV4 - SN3977;ConvF(9.78, 9.78, 9.78); Calibrated: 2014/2/17;
- Sensor-Surface: 2mm (Mechanical Surface Detection)
- Electronics: DAE4 Sn779;Calibrated: 2014/2/25
- Phantom: ELI v5.0;Type: QDOVA002AA;Serial: TP:1133
- Measurement SW: DASY52, Version 52.8 (7);SEMCAD X Version 14.6.10 (7164)

System Performance Check at 750MHz/Area Scan (61x121x1):
Interpolated grid: dx=1.500 mm, dy=1.500 mm
Maximum value of SAR (interpolated) = 2.84 W/kg

System Performance Check at 750MHz/Zoom Scan (7x7x7)/Cube 0:
Measurement grid: dx=5mm, dy=5mm, dz=5mm
Reference Value = 54.836 V/m; Power Drift = -0.00 dB
Peak SAR (extrapolated) = 3.38 W/kg
SAR(1 g) = 2.22 W/kg; SAR(10 g) = 1.43 W/kg
Maximum value of SAR (measured) = 2.85 W/kg

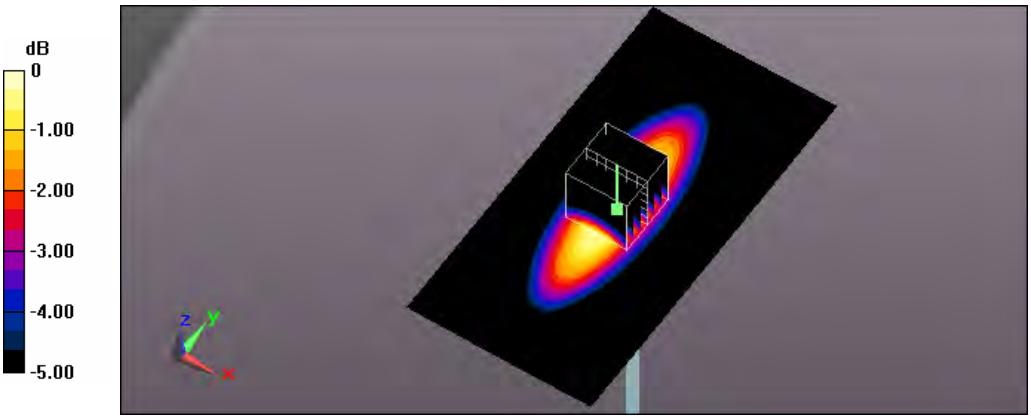

0 dB = 2.85 W/kg = 4.55 dBW/kg

Test Laboratory: A Test Lab Techno Corp.
Date: 2014/9/25Time: AM 07:30:25
System Performance Check at 835MHz_20140925_Body
DUT: Dipole 835 MHz;Type: D835V2;Serial: D835V2 - SN:4d082
Communication System: UID 0, CW (0);Frequency: 835 MHz;Duty Cycle: 1:1
Medium parameters used: f = 835 MHz; σ = 0.99 S/m; εr = 55.294; ρ = 1000 kg/m3
Phantom section: Flat Section
Measurement Standard: DASY5 (IEEE/IEC/ANSI C63.19-2011)
DASY Configuration:

- Area Scan setting - Find Secondary Maximum Within:2.0dB and with a peak SAR value greater than 0.5 W/Kg
- Probe: EX3DV4 - SN3977;ConvF(9.74, 9.74, 9.74); Calibrated: 2014/2/17;
- Sensor-Surface: 2mm (Mechanical Surface Detection)
- Electronics: DAE4 Sn779;Calibrated: 2014/2/25
- Phantom: ELI v5.0;Type: QDOVA002AA;Serial: TP:1133
- Measurement SW: DASY52, Version 52.8 (7);SEMCAD X Version 14.6.10 (7164)

System Performance Check at 835MHz/Area Scan (61x121x1):
Interpolated grid: dx=1.500 mm, dy=1.500 mm
Maximum value of SAR (interpolated) = 3.13 W/kg

System Performance Check at 835MHz/Zoom Scan (7x7x7)/Cube 0:
Measurement grid: dx=5mm, dy=5mm, dz=5mm
Reference Value = 57.205 V/m; Power Drift = -0.19 dB
Peak SAR (extrapolated) = 3.48 W/kg
SAR(1 g) = 2.36 W/kg; SAR(10 g) = 1.56 W/kg
Maximum value of SAR (measured) = 2.97 W/kg

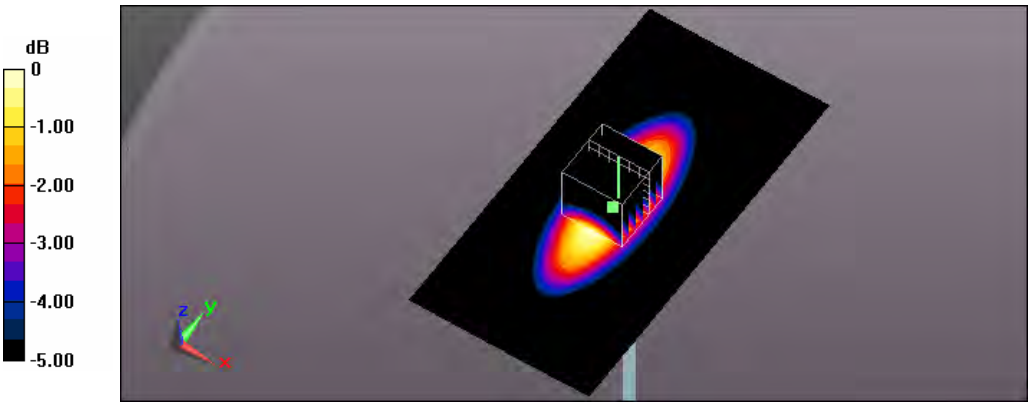

0 dB = 2.97 W/kg = 4.73 dBW/kg

Test Laboratory: A Test Lab Techno Corp.
Date: 2014/9/26Time: AM 09:47:04
System Performance Check at 835MHz_20140926_Body
DUT: Dipole 835 MHz;Type: D835V2;Serial: D835V2 - SN:4d082
Communication System: UID 0, CW (0);Frequency: 835 MHz;Duty Cycle: 1:1
Medium parameters used: f = 835 MHz; σ = 0.99 S/m; ε_r = 55.294; ρ = 1000 kg/m^3
Phantom section: Flat Section
Measurement Standard: DASY5 (IEEE/IEC/ANSI C63.19-2011)
DASY Configuration:

- Area Scan setting - Find Secondary Maximum Within:2.0dB and with a peak SAR value greater than 0.5 W/Kg
- Probe: EX3DV4 - SN3977;ConvF(9.74, 9.74, 9.74); Calibrated: 2014/2/17;
- Sensor-Surface: 2mm (Mechanical Surface Detection)
- Electronics: DAE4 Sn779;Calibrated: 2014/2/25
- Phantom: ELI v5.0;Type: QDOVA002AA;Serial: TP:1133
- Measurement SW: DASY52, Version 52.8 (7);SEMCAD X Version 14.6.10 (7164)

System Performance Check at 835MHz/Area Scan (61x121x1):
Interpolated grid: dx=1.500 mm, dy=1.500 mm
Maximum value of SAR (interpolated) = 2.96 W/kg

System Performance Check at 835MHz/Zoom Scan (7x7x7)/Cube 0:
Measurement grid: dx=5mm, dy=5mm, dz=5mm
Reference Value = 55.912 V/m; Power Drift = -0.04 dB
Peak SAR (extrapolated) = 3.44 W/kg
SAR(1 g) = 2.34 W/kg; SAR(10 g) = 1.55 W/kg
Maximum value of SAR (measured) = 2.95 W/kg

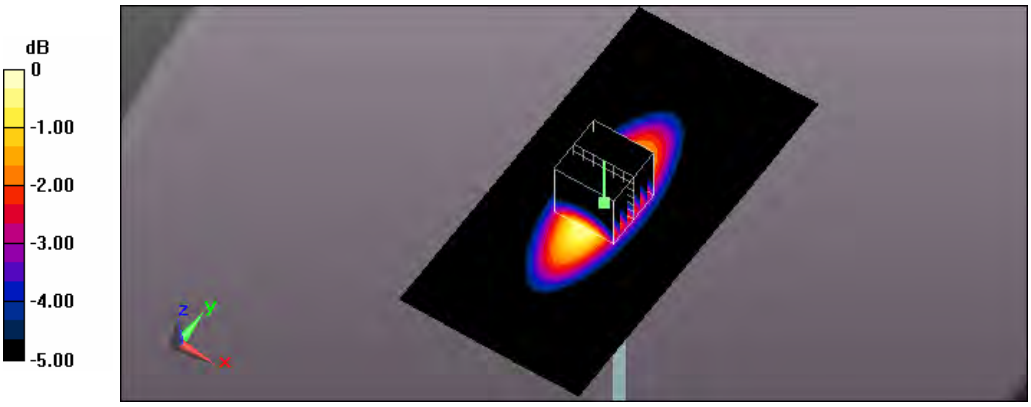

0 dB = 2.95 W/kg = 4.70 dBW/kg

Test Laboratory: A Test Lab Techno Corp.
Date: 2014/11/7Time: AM 09:43:07
System Performance Check at 835MHz_20141107_Body
DUT: Dipole 835 MHz;Type: D835V2;Serial: D835V2 - SN:4d082
Communication System: UID 0, CW (0);Frequency: 835 MHz;Duty Cycle: 1:1
Medium parameters used: f = 835 MHz; σ = 0.99 S/m; ε_r = 55.294; ρ = 1000 kg/m^3
Phantom section: Flat Section
Measurement Standard: DASY5 (IEEE/IEC/ANSI C63.19-2011)
DASY Configuration:

- Area Scan setting - Find Secondary Maximum Within:2.0dB and with a peak SAR value greater than 0.5 W/Kg
- Probe: EX3DV4 - SN3977;ConvF(9.74, 9.74, 9.74); Calibrated: 2014/2/17;
- Sensor-Surface: 2mm (Mechanical Surface Detection)
- Electronics: DAE4 Sn779;Calibrated: 2014/2/25
- Phantom: ELI v5.0;Type: QDOVA002AA;Serial: TP:1133
- Measurement SW: DASY52, Version 52.8 (7);SEMCAD X Version 14.6.10 (7164)

System Performance Check at 835MHz/Area Scan (61x121x1):
Interpolated grid: dx=1.500 mm, dy=1.500 mm
Maximum value of SAR (interpolated) = 2.98 W/kg

System Performance Check at 835MHz/Zoom Scan (7x7x7)/Cube 0:
Measurement grid: dx=5mm, dy=5mm, dz=5mm
Reference Value = 56.576 V/m; Power Drift = -0.11 dB
Peak SAR (extrapolated) = 3.43 W/kg
SAR(1 g) = 2.32 W/kg; SAR(10 g) = 1.53 W/kg
Maximum value of SAR (measured) = 2.93 W/kg

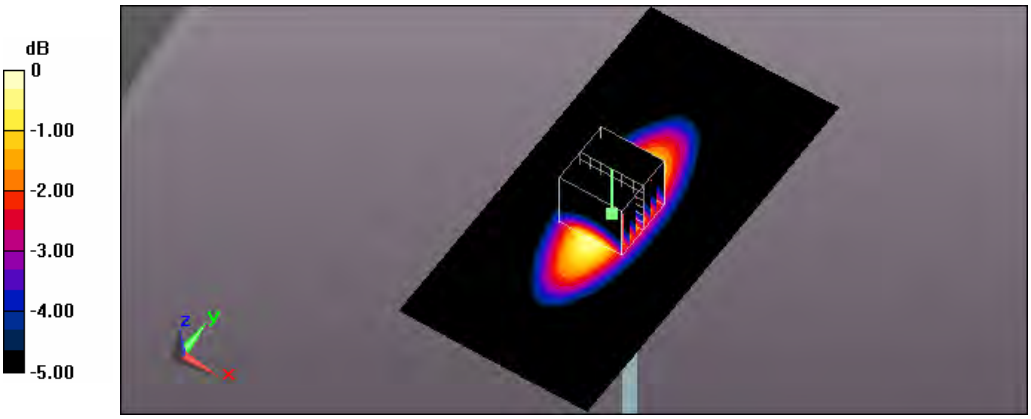

0 dB = 2.93 W/kg = 4.67 dBW/kg

Test Laboratory: A Test Lab Techno Corp.
Date: 2014/12/12Time: AM 11:15:04
System Performance Check at 835MHz_20141212_Body
DUT: Dipole 835 MHz;Type: D835V2;Serial: D835V2 - SN:4d082
Communication System: UID 0, CW (0);Frequency: 835 MHz;Duty Cycle: 1:1
Medium parameters used: f = 835 MHz; σ = 0.99 S/m; ε_r = 55.294; ρ = 1000 kg/m^3
Phantom section: Flat Section
Measurement Standard: DASY5 (IEEE/IEC/ANSI C63.19-2011)
DASY Configuration:

- Area Scan setting - Find Secondary Maximum Within:2.0dB and with a peak SAR value greater than 0.5 W/Kg
- Probe: EX3DV4 - SN3977;ConvF(9.74, 9.74, 9.74); Calibrated: 2014/2/17;
- Sensor-Surface: 2mm (Mechanical Surface Detection)
- Electronics: DAE4 Sn779;Calibrated: 2014/2/25
- Phantom: ELI v5.0;Type: QDOVA002AA;Serial: TP:1133
- Measurement SW: DASY52, Version 52.8 (7);SEMCAD X Version 14.6.10 (7164)

System Performance Check at 835MHz/Area Scan (61x121x1):
Interpolated grid: dx=1.500 mm, dy=1.500 mm
Maximum value of SAR (interpolated) = 2.90 W/kg

System Performance Check at 835MHz/Zoom Scan (7x7x7)/Cube 0:
Measurement grid: dx=5mm, dy=5mm, dz=5mm
Reference Value = 55.074 V/m; Power Drift = -0.00 dB
Peak SAR (extrapolated) = 3.41 W/kg
SAR(1 g) = 2.3 W/kg; SAR(10 g) = 1.51 W/kg
Maximum value of SAR (measured) = 2.91 W/kg

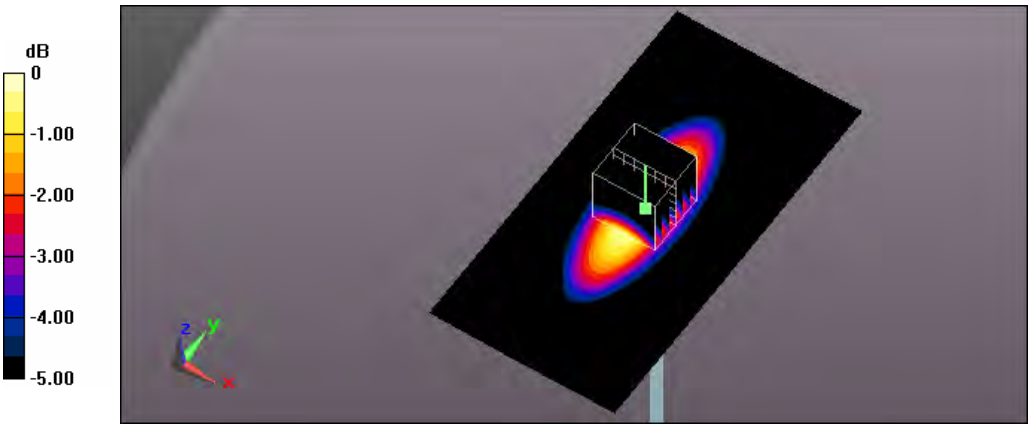

0 dB = 2.91 W/kg = 4.64 dBW/kg

Test Laboratory: A Test Lab Techno Corp.
Date: 2014/9/26Time: PM 02:44:27
System Performance Check at 1750MHz_20140926_Body
DUT: Dipole D1750V2_SN1023;Type: D1750V2;Serial: D1750V2 - SN:1023
Communication System: UID 0, CW (0);Frequency: 1750 MHz;Duty Cycle: 1:1
Medium parameters used: f = 1750 MHz; σ = 1.517 S/m; ε_r = 54.706; ρ = 1000 kg/m^3
Phantom section: Flat Section
Measurement Standard: DASY5 (IEEE/IEC/ANSI C63.19-2011)
DASY Configuration:

- Area Scan setting - Find Secondary Maximum Within:2.0dB and with a peak SAR value greater than 0.5 W/Kg
- Probe: EX3DV4 - SN3977;ConvF(7.69, 7.69, 7.69); Calibrated: 2014/2/17;
- Sensor-Surface: 2mm (Mechanical Surface Detection)
- Electronics: DAE4 Sn779;Calibrated: 2014/2/25
- Phantom: ELI v5.0;Type: QDOVA002AA;Serial: TP:1133
- Measurement SW: DASY52, Version 52.8 (7);SEMCAD X Version 14.6.10 (7164)

System Performance Check at 1750MHz/Area Scan (61x61x1):
Interpolated grid: dx=1.500 mm, dy=1.500 mm
Maximum value of SAR (interpolated) = 13.0 W/kg

System Performance Check at 1750MHz/Zoom Scan (7x7x7)/Cube 0:
Measurement grid: dx=5mm, dy=5mm, dz=5mm
Reference Value = 92.305 V/m; Power Drift = 0.05 dB
Peak SAR (extrapolated) = 16.6 W/kg
SAR(1 g) = 9.27 W/kg; SAR(10 g) = 4.86 W/kg
Maximum value of SAR (measured) = 13.2 W/kg

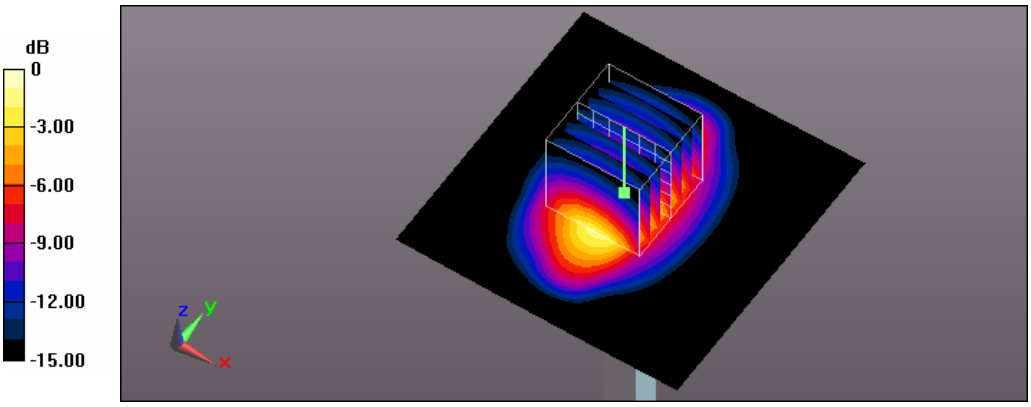

0 dB = 13.2 W/kg = 11.21 dBW/kg

Test Laboratory: A Test Lab Techno Corp.
Date: 2014/9/29Time: PM 10:44:27
System Performance Check at 1750MHz_20140929_Body
DUT: Dipole 1750 MHz;Type: D1750V2;Serial: D1750V2 - SN:1023
Communication System: UID 0, CW (0);Frequency: 1750 MHz;Duty Cycle: 1:1
Medium parameters used: f = 1750 MHz; σ = 1.517 S/m; ε_r = 54.706; ρ = 1000 kg/m^3
Phantom section: Flat Section
Measurement Standard: DASY5 (IEEE/IEC/ANSI C63.19-2011)
DASY Configuration:

- Area Scan setting - Find Secondary Maximum Within:2.0dB and with a peak SAR value greater than 0.5 W/Kg
- Probe: EX3DV4 - SN3977;ConvF(7.69, 7.69, 7.69); Calibrated: 2014/2/17;
- Sensor-Surface: 2mm (Mechanical Surface Detection)
- Electronics: DAE4 Sn779;Calibrated: 2014/2/25
- Phantom: ELI v5.0;Type: QDOVA002AA;Serial: TP:1133
- Measurement SW: DASY52, Version 52.8 (7);SEMCAD X Version 14.6.10 (7164)

System Performance Check at 1750MHz/Area Scan (61x61x1):
Interpolated grid: dx=1.500 mm, dy=1.500 mm
Maximum value of SAR (interpolated) = 13.4 W/kg

System Performance Check at 1750MHz/Zoom Scan (7x7x7)/Cube 0:
Measurement grid: dx=5mm, dy=5mm, dz=5mm
Reference Value = 95.851 V/m; Power Drift = 0.02 dB
Peak SAR (extrapolated) = 16.8 W/kg
SAR(1 g) = 9.4 W/kg; SAR(10 g) = 4.94 W/kg
Maximum value of SAR (measured) = 13.4 W/kg

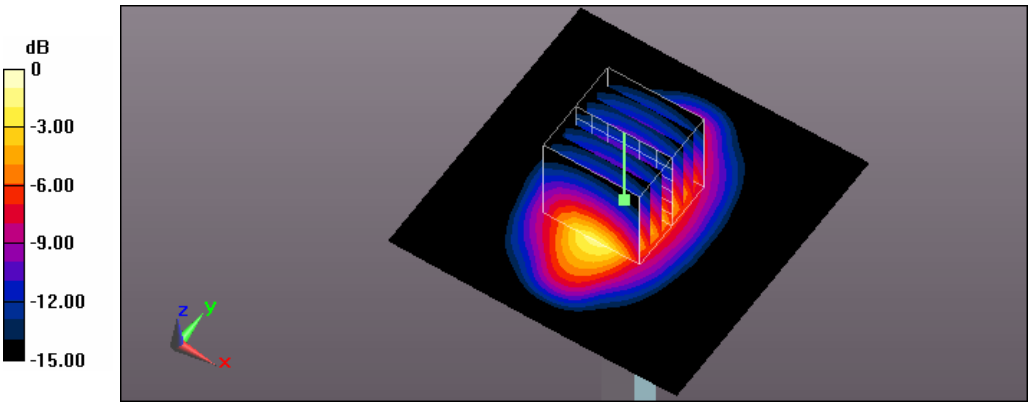

0 dB = 13.4 W/kg = 11.27 dBW/kg

Test Laboratory: A Test Lab Techno Corp.
Date: 2014/9/27Time: AM 07:53:19
System Performance Check at 1900MHz_20140927_Body
DUT: Dipole D1900V2_SN5d111;Type: D1900V2;Serial: D1900V2 - SN:5d111
Communication System: UID 0, CW (0);Frequency: 1900 MHz;Duty Cycle: 1:1
Medium parameters used: f = 1900 MHz; σ = 1.475 S/m; ε_r = 52.463; ρ = 1000 kg/m^3
Phantom section: Flat Section
Measurement Standard: DASY5 (IEEE/IEC/ANSI C63.19-2011)
DASY Configuration:

- Area Scan setting - Find Secondary Maximum Within:2.0dB and with a peak SAR value greater than 0.5 W/Kg
- Probe: EX3DV4 - SN3977;ConvF(7.37, 7.37, 7.37); Calibrated: 2014/2/17;
- Sensor-Surface: 2mm (Mechanical Surface Detection)
- Electronics: DAE4 Sn779;Calibrated: 2014/2/25
- Phantom: ELI v5.0;Type: QDOVA002AA;Serial: TP:1133
- Measurement SW: DASY52, Version 52.8 (7);SEMCAD X Version 14.6.10 (7164)

System Performance Check at 1900MHz/Area Scan (61x61x1):
Interpolated grid: dx=1.500 mm, dy=1.500 mm
Maximum value of SAR (interpolated) = 14.2 W/kg

System Performance Check at 1900MHz/Zoom Scan (7x7x7)/Cube 0:
Measurement grid: dx=5mm, dy=5mm, dz=5mm
Reference Value = 96.001 V/m; Power Drift = 0.09 dB
Peak SAR (extrapolated) = 18.4 W/kg
SAR(1 g) = 10 W/kg; SAR(10 g) = 5.18 W/kg
Maximum value of SAR (measured) = 14.4 W/kg

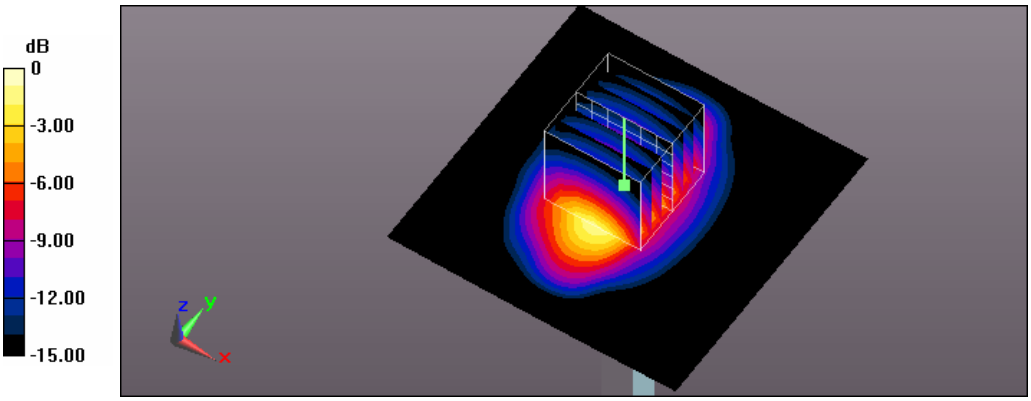

0 dB = 14.4 W/kg = 11.58 dBW/kg

Test Laboratory: A Test Lab Techno Corp.
Date: 2014/11/12Time: PM 07:02:13
System Performance Check at 1900MHz_20141112_Body
DUT: Dipole D1900V2_SN5d111;Type: D1900V2;Serial: D1900V2 - SN:5d111
Communication System: UID 0, CW (0);Frequency: 1900 MHz;Duty Cycle: 1:1
Medium parameters used: f = 1900 MHz; σ = 1.475 S/m; ε_r = 52.463; ρ = 1000 kg/m^3
Phantom section: Flat Section
Measurement Standard: DASY5 (IEEE/IEC/ANSI C63.19-2011)
DASY Configuration:

- Area Scan setting - Find Secondary Maximum Within:2.0dB and with a peak SAR value greater than 0.5 W/Kg
- Probe: EX3DV4 - SN3977;ConvF(7.37, 7.37, 7.37); Calibrated: 2014/2/17;
- Sensor-Surface: 2mm (Mechanical Surface Detection)
- Electronics: DAE4 Sn779;Calibrated: 2014/2/25
- Phantom: ELI v5.0;Type: QDOVA002AA;Serial: TP:1133
- Measurement SW: DASY52, Version 52.8 (7);SEMCAD X Version 14.6.10 (7164)

System Performance Check at 1900MHz/Area Scan (61x61x1):
Interpolated grid: dx=1.500 mm, dy=1.500 mm
Maximum value of SAR (interpolated) = 13.6 W/kg

System Performance Check at 1900MHz/Zoom Scan (7x7x7)/Cube 0:
Measurement grid: dx=5mm, dy=5mm, dz=5mm
Reference Value = 96.832 V/m; Power Drift = 0.09 dB
Peak SAR (extrapolated) = 18.7 W/kg
SAR(1 g) = 10.3 W/kg; SAR(10 g) = 5.32 W/kg
Maximum value of SAR (measured) = 14.8 W/kg

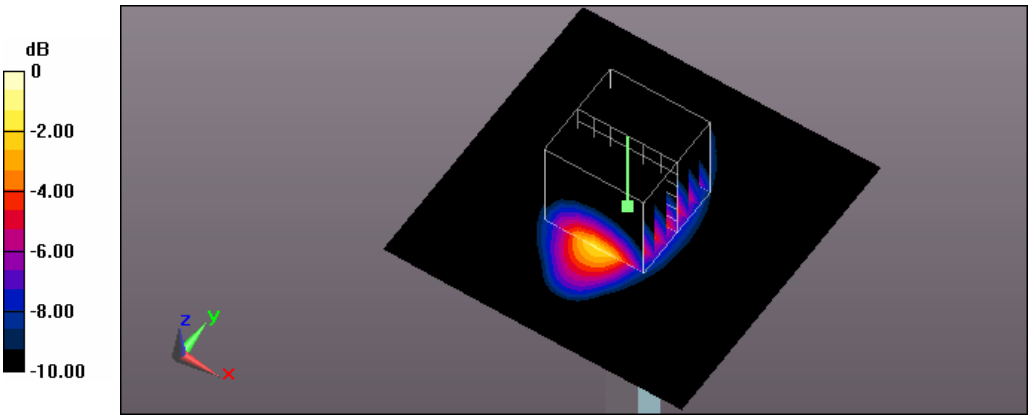

0 dB = 14.8 W/kg = 11.70 dBW/kg

Test Laboratory: A Test Lab Techno Corp.
Date: 2014/12/12Time: PM 06:22:16
System Performance Check at 1900MHz_20141212_Body
DUT: Dipole D1900V2_SN5d111;Type: D1900V2;Serial: D1900V2 - SN:5d111
Communication System: UID 0, CW (0);Frequency: 1900 MHz;Duty Cycle: 1:1
Medium parameters used: f = 1900 MHz; σ = 1.475 S/m; ε_r = 52.463; ρ = 1000 kg/m^3
Phantom section: Flat Section
Measurement Standard: DASY5 (IEEE/IEC/ANSI C63.19-2011)
DASY Configuration:

- Area Scan setting - Find Secondary Maximum Within:2.0dB and with a peak SAR value greater than 0.5 W/Kg
- Probe: EX3DV4 - SN3977;ConvF(7.37, 7.37, 7.37); Calibrated: 2014/2/17;
- Sensor-Surface: 2mm (Mechanical Surface Detection)
- Electronics: DAE4 Sn779;Calibrated: 2014/2/25
- Phantom: ELI v5.0;Type: QDOVA002AA;Serial: TP:1133
- Measurement SW: DASY52, Version 52.8 (7);SEMCAD X Version 14.6.10 (7164)

System Performance Check at 1900MHz/Area Scan (61x61x1):
Interpolated grid: dx=1.500 mm, dy=1.500 mm
Maximum value of SAR (interpolated) = 14.7 W/kg

System Performance Check at 1900MHz/Zoom Scan (7x7x7)/Cube 0:
Measurement grid: dx=5mm, dy=5mm, dz=5mm
Reference Value = 100.4 V/m; Power Drift = 0.07 dB
Peak SAR (extrapolated) = 18.7 W/kg
SAR(1 g) = 10.3 W/kg; SAR(10 g) = 5.34 W/kg
Maximum value of SAR (measured) = 14.8 W/kg

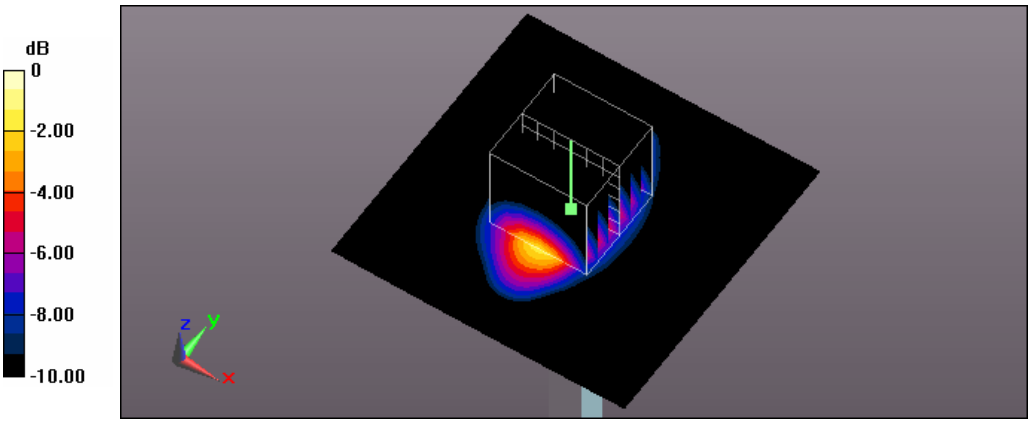

0 dB = 14.8 W/kg = 11.70 dBW/kg

Test Laboratory: A Test Lab Techno Corp.
Date: 2014/9/24Time: PM 06:32:32
System Performance Check at 2450MHz_20140924_Body
DUT: Dipole 2450 MHz;Type: D2450V2;Serial: D2450V2 - SN:712
Communication System: UID 0, CW (0);Frequency: 2450 MHz;Duty Cycle: 1:1
Medium parameters used: f = 2450 MHz; σ = 1.98 S/m; ε_r = 54.458; ρ = 1000 kg/m^3
Phantom section: Flat Section
Measurement Standard: DASY5 (IEEE/IEC/ANSI C63.19-2011)
DASY Configuration:

- Area Scan setting - Find Secondary Maximum Within:2.0dB and with a peak SAR value greater than 0.5 W/Kg
- Probe: EX3DV4 - SN3977;ConvF(6.97, 6.97, 6.97); Calibrated: 2014/2/17;
- Sensor-Surface: 2mm (Mechanical Surface Detection)
- Electronics: DAE4 Sn779;Calibrated: 2014/2/25
- Phantom: ELI v5.0;Type: QDOVA002AA;Serial: TP:1133
- Measurement SW: DASY52, Version 52.8 (7);SEMCAD X Version 14.6.10 (7164)

System Performance Check at 2450MHz/Area Scan (61x61x1):
Interpolated grid: dx=1.500 mm, dy=1.500 mm
Maximum value of SAR (interpolated) = 19.5 W/kg

System Performance Check at 2450MHz/Zoom Scan (7x7x7)/Cube 0:
Measurement grid: dx=5mm, dy=5mm, dz=5mm
Reference Value = 99.179 V/m; Power Drift = 0.05 dB
Peak SAR (extrapolated) = 26.1 W/kg
SAR(1 g) = 12.8 W/kg; SAR(10 g) = 5.96 W/kg
Maximum value of SAR (measured) = 19.5 W/kg

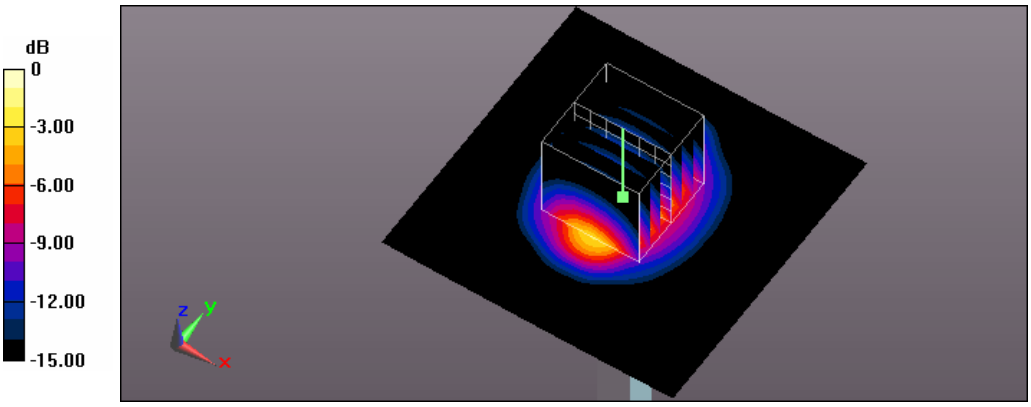

0 dB = 19.5 W/kg = 12.90 dBW/kg

Test Laboratory: A Test Lab Techno Corp.
Date: 2014/11/13Time: AM 12:29:11
System Performance Check at 2600MHz_20141113_Body
DUT: Dipole 2600 MHz;Type: D2600V2;Serial: D2600V2 - SN:1007
Communication System: UID 0, CW (0);Frequency: 2600 MHz;Duty Cycle: 1:1
Medium parameters used: f = 2600 MHz; σ = 2.228 S/m; ε_r = 51.308; ρ = 1000 kg/m^3
Phantom section: Flat Section
Measurement Standard: DASY5 (IEEE/IEC/ANSI C63.19-2011)
DASY Configuration:

- Area Scan setting - Find Secondary Maximum Within:2.0dB and with a peak SAR value greater than 0.5 W/Kg
- Probe: EX3DV4 - SN3977;ConvF(6.68, 6.68, 6.68); Calibrated: 2014/2/17;
- Sensor-Surface: 2mm (Mechanical Surface Detection)
- Electronics: DAE4 Sn779;Calibrated: 2014/2/25
- Phantom: ELI v5.0;Type: QDOVA002AA;Serial: TP:1133
- Measurement SW: DASY52, Version 52.8 (7);SEMCAD X Version 14.6.10 (7164)

System Performance Check at 2600MHz/Area Scan (61x61x1):
Interpolated grid: dx=1.500 mm, dy=1.500 mm
Maximum value of SAR (interpolated) = 23.7 W/kg

System Performance Check at 2600MHz/Zoom Scan (7x7x7)/Cube 0:
Measurement grid: dx=5mm, dy=5mm, dz=5mm
Reference Value = 100.8 V/m; Power Drift = 0.11 dB
Peak SAR (extrapolated) = 32.5 W/kg
SAR(1 g) = 14.5 W/kg; SAR(10 g) = 6.27 W/kg
Maximum value of SAR (measured) = 23.2 W/kg

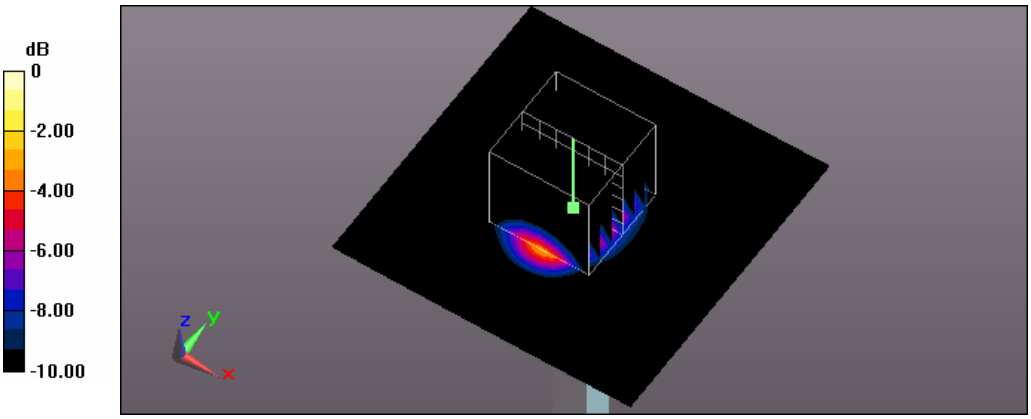

0 dB = 23.2 W/kg = 13.65 dBW/kg

Test Laboratory: A Test Lab Techno Corp.
Date: 2014/11/14Time: AM 12:04:36
System Performance Check at 2600MHz_20141114_Body
DUT: Dipole 2600 MHz;Type: D2600V2;Serial: D2600V2 - SN:1007
Communication System: UID 0, CW (0);Frequency: 2600 MHz;Duty Cycle: 1:1
Medium parameters used: f = 2600 MHz; σ = 2.228 S/m; ε_r = 51.308; ρ = 1000 kg/m^3
Phantom section: Flat Section
Measurement Standard: DASY5 (IEEE/IEC/ANSI C63.19-2011)
DASY Configuration:

- Area Scan setting - Find Secondary Maximum Within:2.0dB and with a peak SAR value greater than 0.5 W/Kg
- Probe: EX3DV4 - SN3977;ConvF(6.68, 6.68, 6.68); Calibrated: 2014/2/17;
- Sensor-Surface: 2mm (Mechanical Surface Detection)
- Electronics: DAE4 Sn779;Calibrated: 2014/2/25
- Phantom: ELI v5.0;Type: QDOVA002AA;Serial: TP:1133
- Measurement SW: DASY52, Version 52.8 (7);SEMCAD X Version 14.6.10 (7164)

System Performance Check at 2600MHz/Area Scan (61x61x1):
Interpolated grid: dx=1.500 mm, dy=1.500 mm
Maximum value of SAR (interpolated) = 22.2 W/kg

System Performance Check at 2600MHz/Zoom Scan (7x7x7)/Cube 0:
Measurement grid: dx=5mm, dy=5mm, dz=5mm
Reference Value = 100.1 V/m; Power Drift = 0.01 dB
Peak SAR (extrapolated) = 31.4 W/kg
SAR(1 g) = 13.9 W/kg; SAR(10 g) = 6.02 W/kg
Maximum value of SAR (measured) = 22.1 W/kg

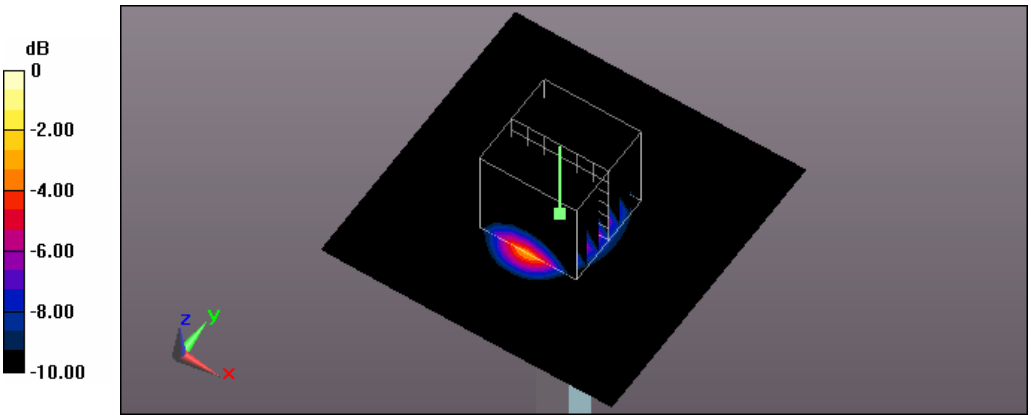

0 dB = 22.1 W/kg = 13.44 dBW/kg

Test Laboratory: A Test Lab Techno Corp.
Date: 2014/11/15Time: AM 12:33:55
System Performance Check at 2600MHz_20141115_Body
DUT: Dipole 2600 MHz;Type: D2600V2;Serial: D2600V2 - SN:1007
Communication System: UID 0, CW (0);Frequency: 2600 MHz;Duty Cycle: 1:1
Medium parameters used: f = 2600 MHz; σ = 2.228 S/m; ε_r = 51.308; ρ = 1000 kg/m^3
Phantom section: Flat Section
Measurement Standard: DASY5 (IEEE/IEC/ANSI C63.19-2011)
DASY Configuration:

- Area Scan setting - Find Secondary Maximum Within:2.0dB and with a peak SAR value greater than 0.5 W/Kg
- Probe: EX3DV4 - SN3977;ConvF(6.68, 6.68, 6.68); Calibrated: 2014/2/17;
- Sensor-Surface: 2mm (Mechanical Surface Detection)
- Electronics: DAE4 Sn779;Calibrated: 2014/2/25
- Phantom: ELI v5.0;Type: QDOVA002AA;Serial: TP:1133
- Measurement SW: DASY52, Version 52.8 (7);SEMCAD X Version 14.6.10 (7164)

System Performance Check at 2600MHz/Area Scan (61x61x1):
Interpolated grid: dx=1.500 mm, dy=1.500 mm
Maximum value of SAR (interpolated) = 21.9 W/kg

System Performance Check at 2600MHz/Zoom Scan (7x7x7)/Cube 0:
Measurement grid: dx=5mm, dy=5mm, dz=5mm
Reference Value = 99.287 V/m; Power Drift = -0.09 dB
Peak SAR (extrapolated) = 31.4 W/kg
SAR(1 g) = 14 W/kg; SAR(10 g) = 6.07 W/kg
Maximum value of SAR (measured) = 22.3 W/kg

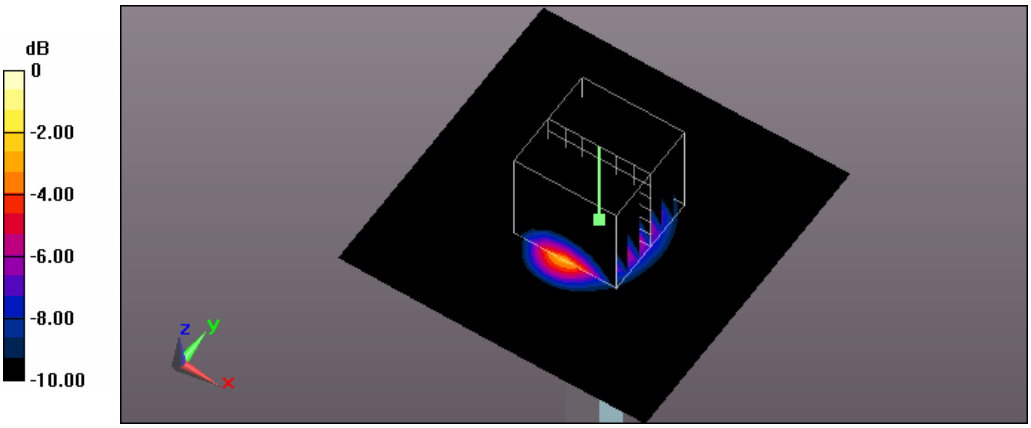

0 dB = 22.3 W/kg = 13.48 dBW/kg

Test Laboratory: A Test Lab Techno Corp.
Date: 2014/11/7Time: PM 05:22:34
System Performance Check at 5200MHz_20141107_Body
DUT: Dipole 5GHzV2;Type: D5GHz;Serial: 1021
Communication System: UID 0, CW (0);Frequency: 5200 MHz;Duty Cycle: 1:1
Medium parameters used: f = 5200 MHz; σ = 5.52 S/m; ε_r = 47.76; ρ = 1000 kg/m^3
Phantom section: Flat Section
Measurement Standard: DASY5 (IEEE/IEC/ANSI C63.19-2011)
DASY Configuration:

- Area Scan setting - Find Secondary Maximum Within:2.0dB and with a peak SAR value greater than 0.5 W/Kg
- Probe: EX3DV4 - SN3977;ConvF(4.5, 4.5, 4.5); Calibrated: 2014/2/17;
- Sensor-Surface: 1.4mm (Mechanical Surface Detection)
- Electronics: DAE4 Sn779;Calibrated: 2014/2/25
- Phantom: ELI v5.0;Type: QDOVA002AA;Serial: TP:1133
- Measurement SW: DASY52, Version 52.8 (7);SEMCAD X Version 14.6.10 (7164)

System Performance Check at 5200MHz/Area Scan (91x91x1):
Interpolated grid: dx=1.000 mm, dy=1.000 mm
Maximum value of SAR (interpolated) = 16.7 W/kg

System Performance Check at 5200MHz/Zoom Scan (8x8x7)/Cube 0:
Measurement grid: dx=4mm, dy=4mm, dz=1.4mm
Reference Value = 64.717 V/m; Power Drift = -0.11 dB
Peak SAR (extrapolated) = 30.0 W/kg
SAR(1 g) = 7.14 W/kg; SAR(10 g) = 2 W/kg
Maximum value of SAR (measured) = 16.8 W/kg

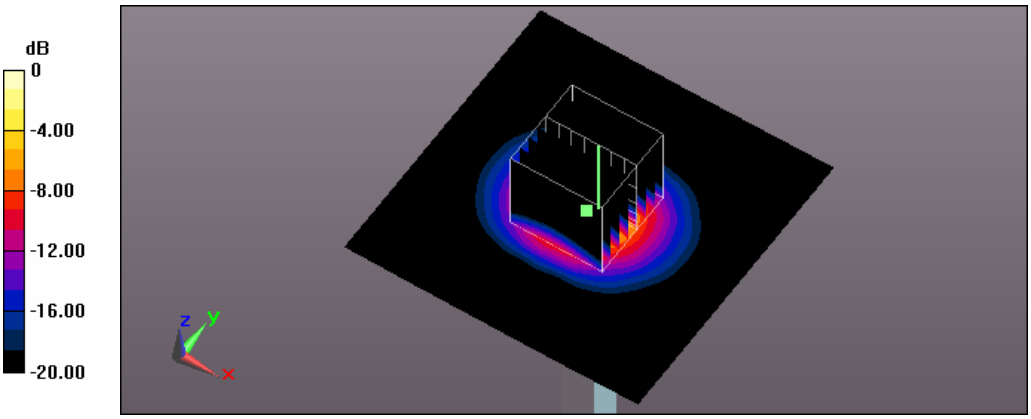

0 dB = 16.8 W/kg = 12.25 dBW/kg

Test Laboratory: A Test Lab Techno Corp.
Date: 2014/11/10Time: AM 10:32:10
System Performance Check at 5200MHz_20141110_Body
DUT: Dipole 5GHzV2;Type: D5GHz;Serial: 1021
Communication System: UID 0, CW (0);Frequency: 5200 MHz;Duty Cycle: 1:1
Medium parameters used: f = 5200 MHz; σ = 5.52 S/m; ε_r = 47.76; ρ = 1000 kg/m^3
Phantom section: Flat Section
Measurement Standard: DASY5 (IEEE/IEC/ANSI C63.19-2011)
DASY Configuration:

- Area Scan setting - Find Secondary Maximum Within:2.0dB and with a peak SAR value greater than 0.5 W/Kg
- Probe: EX3DV4 - SN3977;ConvF(4.5, 4.5, 4.5); Calibrated: 2014/2/17;
- Sensor-Surface: 1.4mm (Mechanical Surface Detection)
- Electronics: DAE4 Sn779;Calibrated: 2014/2/25
- Phantom: ELI v5.0;Type: QDOVA002AA;Serial: TP:1133
- Measurement SW: DASY52, Version 52.8 (7);SEMCAD X Version 14.6.10 (7164)

System Performance Check at 5200MHz/Area Scan (91x91x1):
Interpolated grid: dx=1.000 mm, dy=1.000 mm
Maximum value of SAR (interpolated) = 18.0 W/kg

System Performance Check at 5200MHz/Zoom Scan (8x8x7)/Cube 0:
Measurement grid: dx=4mm, dy=4mm, dz=1.4mm
Reference Value = 65.847 V/m; Power Drift = 0.05 dB
Peak SAR (extrapolated) = 31.9 W/kg
SAR(1 g) = 7.48 W/kg; SAR(10 g) = 2.09 W/kg
Maximum value of SAR (measured) = 18.1 W/kg

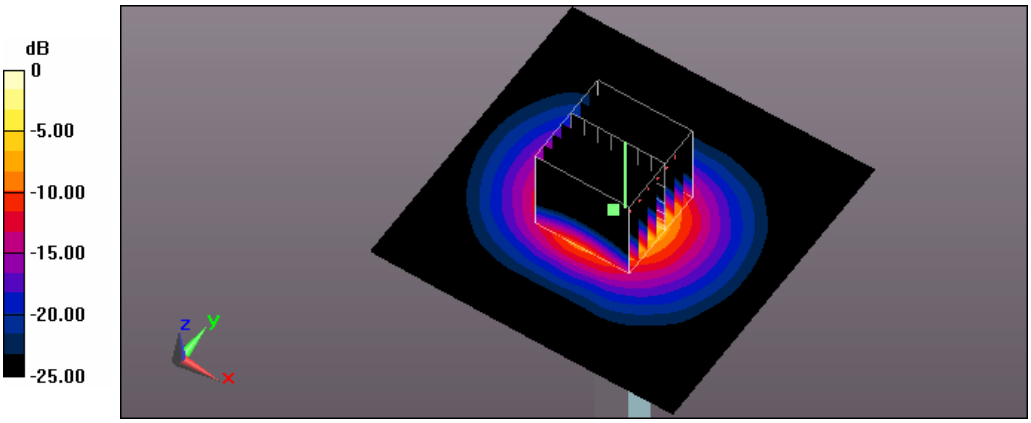

0 dB = 18.1 W/kg = 12.58 dBW/kg

Test Laboratory: A Test Lab Techno Corp.
Date: 2014/11/10Time: AM 11:38:02
System Performance Check at 5800MHz_20141110_Body
DUT: Dipole 5GHzV2;Type: D5GHz;Serial: 1021
Communication System: UID 0, CW (0);Frequency: 5800 MHz;Duty Cycle: 1:1
Medium parameters used: f = 5800 MHz; σ = 6.27 S/m; ε_r = 46.4; ρ = 1000 kg/m^3
Phantom section: Flat Section
Measurement Standard: DASY5 (IEEE/IEC/ANSI C63.19-2011)
DASY Configuration:

- Area Scan setting - Find Secondary Maximum Within:2.0dB and with a peak SAR value greater than 0.5 W/Kg
- Probe: EX3DV4 - SN3977;ConvF(4.12, 4.12, 4.12); Calibrated: 2014/2/17;
- Sensor-Surface: 1.4mm (Mechanical Surface Detection)
- Electronics: DAE4 Sn779;Calibrated: 2014/2/25
- Phantom: ELI v5.0;Type: QDOVA002AA;Serial: TP:1133
- Measurement SW: DASY52, Version 52.8 (7);SEMCAD X Version 14.6.10 (7164)

System Performance Check at 5800MHz/Area Scan (91x91x1):
Interpolated grid: dx=1.000 mm, dy=1.000 mm
Maximum value of SAR (interpolated) = 16.9 W/kg

System Performance Check at 5800MHz/Zoom Scan (8x8x7)/Cube 0:
Measurement grid: dx=4mm, dy=4mm, dz=1.4mm
Reference Value = 61.617 V/m; Power Drift = -0.02 dB
Peak SAR (extrapolated) = 30.3 W/kg
SAR(1 g) = 7.31 W/kg; SAR(10 g) = 2.04 W/kg
Maximum value of SAR (measured) = 17.5 W/kg

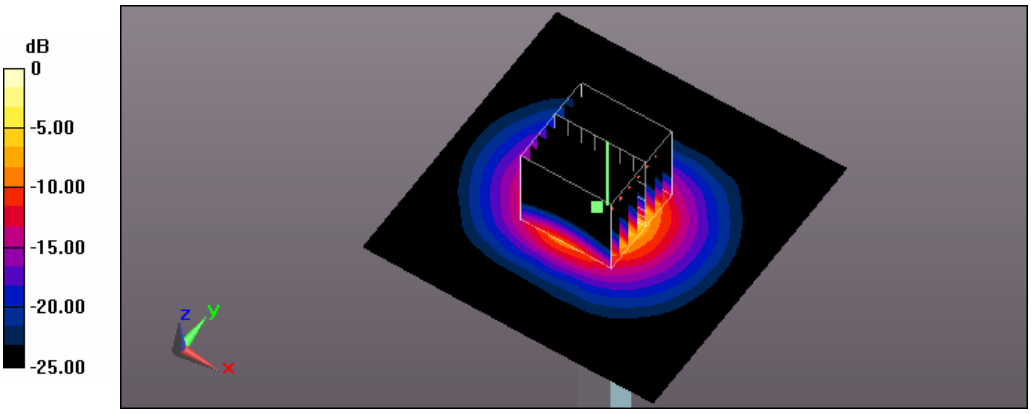

0 dB = 17.5 W/kg = 12.43 dBW/kg

Test Laboratory: A Test Lab Techno Corp.
Date: 2014/11/11Time: AM 11:37:26
System Performance Check at 5800MHz_20141111_Body
DUT: Dipole 5GHzV2;Type: D5GHz;Serial: 1021
Communication System: UID 0, CW (0);Frequency: 5800 MHz;Duty Cycle: 1:1
Medium parameters used: f = 5800 MHz; σ = 6.27 S/m; ε_r = 46.4; ρ = 1000 kg/m^3
Phantom section: Flat Section
Measurement Standard: DASY5 (IEEE/IEC/ANSI C63.19-2011)
DASY Configuration:

- Area Scan setting - Find Secondary Maximum Within:2.0dB and with a peak SAR value greater than 0.5 W/Kg
- Probe: EX3DV4 - SN3977;ConvF(4.12, 4.12, 4.12); Calibrated: 2014/2/17;
- Sensor-Surface: 1.4mm (Mechanical Surface Detection)
- Electronics: DAE4 Sn779;Calibrated: 2014/2/25
- Phantom: ELI v5.0;Type: QDOVA002AA;Serial: TP:1133
- Measurement SW: DASY52, Version 52.8 (7);SEMCAD X Version 14.6.10 (7164)

System Performance Check at 5800MHz/Area Scan (91x91x1):
Interpolated grid: dx=1.000 mm, dy=1.000 mm
Maximum value of SAR (interpolated) = 18.7 W/kg

System Performance Check at 5800MHz/Zoom Scan (8x8x7)/Cube 0:
Measurement grid: dx=4mm, dy=4mm, dz=1.4mm
Reference Value = 64.976 V/m; Power Drift = 0.01 dB
Peak SAR (extrapolated) = 36.9 W/kg
SAR(1 g) = 7.56 W/kg; SAR(10 g) = 2.08 W/kg
Maximum value of SAR (measured) = 19.4 W/kg

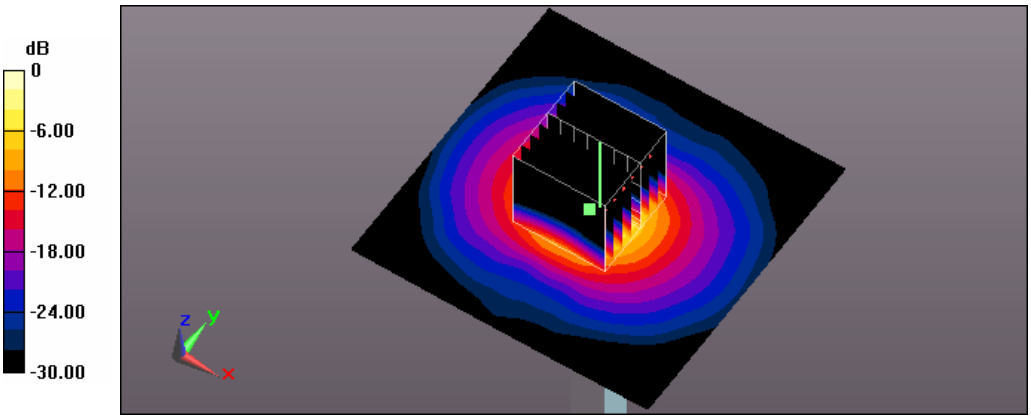

0 dB = 19.4 W/kg = 12.88 dBW/kg

Appendix B - SAR Measurement Data

Test Laboratory: A Test Lab Techno Corp.
Date: 2014/12/12Time: PM 02:40:35
1_Flat_GPRS 850 CH128_3D2U_side 1 surface to phantom 10mm
DUT: AC785S-500;Type: WWAN Mobile Hotspot Portable Device;Serial: 014197000002053
Communication System: UID 0, GPRS 850 (3Down, 2Up) (0);Frequency: 824.2 MHz;Duty Cycle: 1:4
Medium parameters used (interpolated): f = 824.2 MHz; σ = 0.978 S/m; ε_r = 55.317; ρ = 1000 kg/m^3
Phantom section: Flat Section
Measurement Standard: DASY5 (IEEE/IEC/ANSI C63.19-2011)
DASY Configuration:

- Area Scan setting - Find Secondary Maximum Within:2.0dB and with a peak SAR value greater than 0.5 W/Kg
- Probe: EX3DV4 - SN3977;ConvF(9.74, 9.74, 9.74); Calibrated: 2014/2/17;
- Sensor-Surface: 2mm (Mechanical Surface Detection)
- Electronics: DAE4 Sn779;Calibrated: 2014/2/25
- Phantom: ELI v5.0;Type: QDOVA002AA;Serial: TP:1133
- Measurement SW: DASY52, Version 52.8 (7);SEMCAD X Version 14.6.10 (7164)

Flat/Area Scan (71x111x1):
Interpolated grid: dx=1.500 mm, dy=1.500 mm
Maximum value of SAR (interpolated) = 0.821 W/kg

Flat/Zoom Scan (5x5x7)/Cube 0:
Measurement grid: dx=8mm, dy=8mm, dz=5mm
Reference Value = 21.863 V/m; Power Drift = 0.10 dB
Peak SAR (extrapolated) = 0.996 W/kg
SAR(1 g) = 0.635 W/kg; SAR(10 g) = 0.406 W/kg
Maximum value of SAR (measured) = 0.827 W/kg

Flat/Zoom Scan (5x5x7)/Cube 1:
Measurement grid: dx=8mm, dy=8mm, dz=5mm
Reference Value = 21.863 V/m; Power Drift = 0.10 dB
Peak SAR (extrapolated) = 0.878 W/kg
SAR(1 g) = 0.602 W/kg; SAR(10 g) = 0.402 W/kg
Maximum value of SAR (measured) = 0.756 W/kg

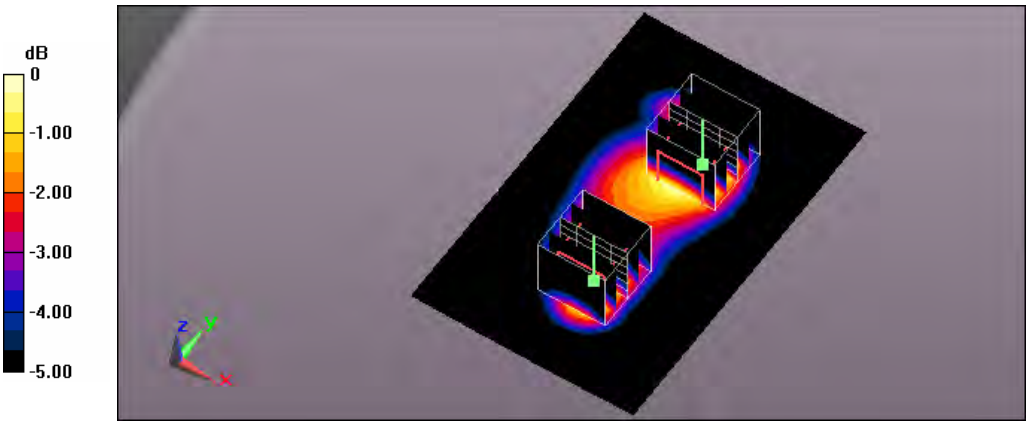

0 dB = 0.756 W/kg = -1.21 dBW/kg

Test Laboratory: A Test Lab Techno Corp.
Date: 2014/12/12Time: PM 03:09:43
2_Flat_GPRS 850 CH128_3D2U_side 2 surface to phantom 10mm
DUT: AC785S-500;Type: WWAN Mobile Hotspot Portable Device;Serial: 014197000002053
Communication System: UID 0, GPRS 850 (3Down, 2Up) (0);Frequency: 824.2 MHz;Duty Cycle: 1:4
Medium parameters used (interpolated): f = 824.2 MHz; σ = 0.978 S/m; ε_r = 55.317; ρ = 1000 kg/m^3
Phantom section: Flat Section
Measurement Standard: DASY5 (IEEE/IEC/ANSI C63.19-2011)
DASY Configuration:

- Area Scan setting - Find Secondary Maximum Within:2.0dB and with a peak SAR value greater than 0.5 W/Kg
- Probe: EX3DV4 - SN3977;ConvF(9.74, 9.74, 9.74); Calibrated: 2014/2/17;
- Sensor-Surface: 2mm (Mechanical Surface Detection)
- Electronics: DAE4 Sn779;Calibrated: 2014/2/25
- Phantom: ELI v5.0;Type: QDOVA002AA;Serial: TP:1133
- Measurement SW: DASY52, Version 52.8 (7);SEMCAD X Version 14.6.10 (7164)

Flat/Area Scan (71x111x1):
Interpolated grid: dx=1.500 mm, dy=1.500 mm
Maximum value of SAR (interpolated) = 0.628 W/kg

Flat/Zoom Scan (5x5x7)/Cube 0:
Measurement grid: dx=8mm, dy=8mm, dz=5mm
Reference Value = 22.181 V/m; Power Drift = 0.19 dB
Peak SAR (extrapolated) = 0.769 W/kg
SAR(1 g) = 0.540 W/kg; SAR(10 g) = 0.379 W/kg
Maximum value of SAR (measured) = 0.655 W/kg

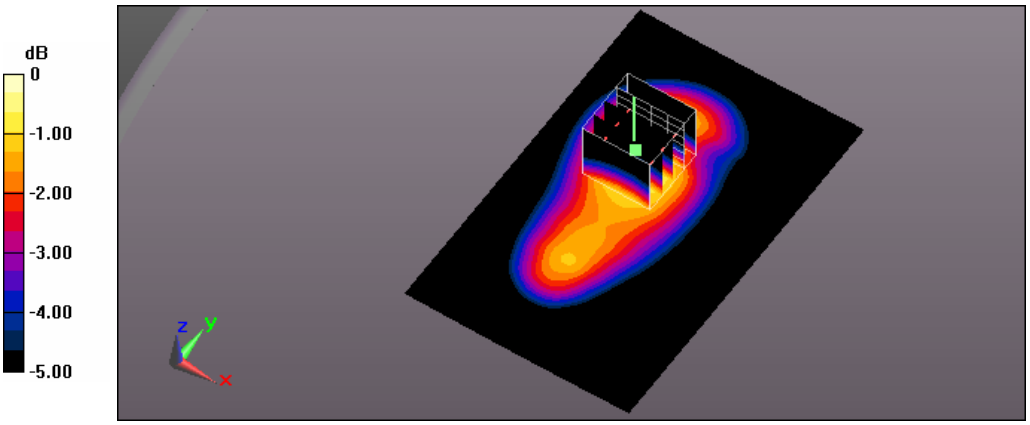

0 dB = 0.655 W/kg = -1.84 dBW/kg

Test Laboratory: A Test Lab Techno Corp.
Date: 2014/12/12Time: PM 03:55:47
3_Flat_GPRS 850 CH128_3D2U_side 3 surface to phantom 10mm
DUT: AC785S-500;Type: WWAN Mobile Hotspot Portable Device;Serial: 014197000002053
Communication System: UID 0, GPRS 850 (3Down, 2Up) (0);Frequency: 824.2 MHz;Duty Cycle: 1:4
Medium parameters used (interpolated): f = 824.2 MHz; σ = 0.978 S/m; ε_r = 55.317; ρ = 1000 kg/m^3
Phantom section: Flat Section
Measurement Standard: DASY5 (IEEE/IEC/ANSI C63.19-2011)
DASY Configuration:

- Area Scan setting - Find Secondary Maximum Within:2.0dB and with a peak SAR value greater than 0.5 W/Kg
- Probe: EX3DV4 - SN3977;ConvF(9.74, 9.74, 9.74); Calibrated: 2014/2/17;
- Sensor-Surface: 2mm (Mechanical Surface Detection)
- Electronics: DAE4 Sn779;Calibrated: 2014/2/25
- Phantom: ELI v5.0;Type: QDOVA002AA;Serial: TP:1133
- Measurement SW: DASY52, Version 52.8 (7);SEMCAD X Version 14.6.10 (7164)

Flat/Area Scan (61x111x1):
Interpolated grid: dx=1.500 mm, dy=1.500 mm
Maximum value of SAR (interpolated) = 0.233 W/kg

Flat/Zoom Scan (5x5x7)/Cube 0:
Measurement grid: dx=8mm, dy=8mm, dz=5mm
Reference Value = 15.630 V/m; Power Drift = 0.01 dB
Peak SAR (extrapolated) = 0.269 W/kg
SAR(1 g) = 0.195 W/kg; SAR(10 g) = 0.139 W/kg
Maximum value of SAR (measured) = 0.236 W/kg

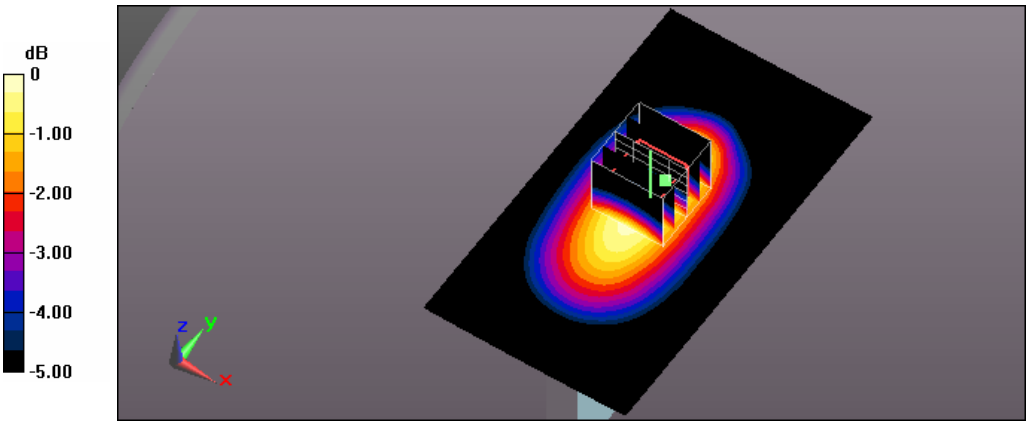

0 dB = 0.236 W/kg = -6.27 dBW/kg

Test Laboratory: A Test Lab Techno Corp.
Date: 2014/12/12Time: PM 04:38:58
4_Flat_GPRS 850 CH128_3D2U_side 4 surface to phantom 10mm
DUT: AC785S-500;Type: WWAN Mobile Hotspot Portable Device;Serial: 014197000002053
Communication System: UID 0, GPRS 850 (3Down, 2Up) (0);Frequency: 824.2 MHz;Duty Cycle: 1:4
Medium parameters used (interpolated): f = 824.2 MHz; σ = 0.978 S/m; ε_r = 55.317; ρ = 1000 kg/m^3
Phantom section: Flat Section
Measurement Standard: DASY5 (IEEE/IEC/ANSI C63.19-2011)
DASY Configuration:

- Area Scan setting - Find Secondary Maximum Within:2.0dB and with a peak SAR value greater than 0.5 W/Kg
- Probe: EX3DV4 - SN3977;ConvF(9.74, 9.74, 9.74); Calibrated: 2014/2/17;
- Sensor-Surface: 2mm (Mechanical Surface Detection)
- Electronics: DAE4 Sn779;Calibrated: 2014/2/25
- Phantom: ELI v5.0;Type: QDOVA002AA;Serial: TP:1133
- Measurement SW: DASY52, Version 52.8 (7);SEMCAD X Version 14.6.10 (7164)

Flat/Area Scan (61x111x1):
Interpolated grid: dx=1.500 mm, dy=1.500 mm
Maximum value of SAR (interpolated) = 0.255 W/kg

Flat/Zoom Scan (5x5x7)/Cube 0:
Measurement grid: dx=8mm, dy=8mm, dz=5mm
Reference Value = 15.827 V/m; Power Drift = -0.01 dB
Peak SAR (extrapolated) = 0.293 W/kg
SAR(1 g) = 0.210 W/kg; SAR(10 g) = 0.148 W/kg
Maximum value of SAR (measured) = 0.254 W/kg

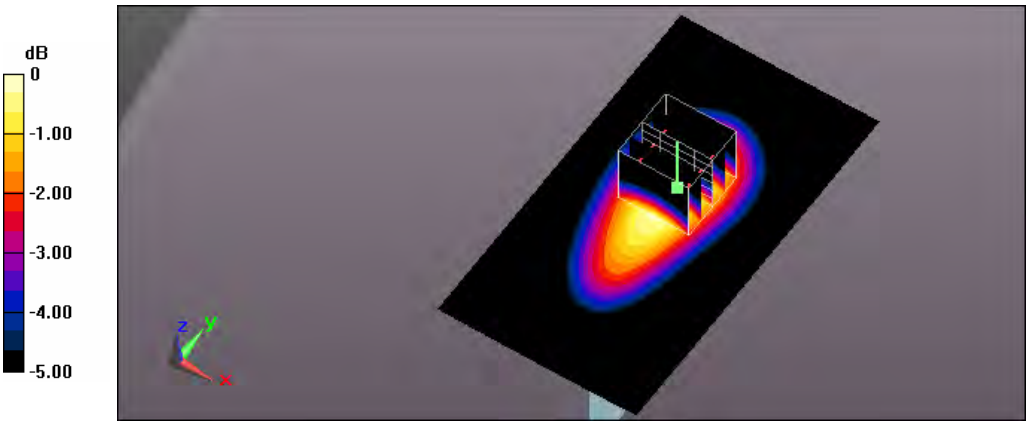

0 dB = 0.254 W/kg = -5.95 dBW/kg

Test Laboratory: A Test Lab Techno Corp.
Date: 2014/12/12Time: PM 05:21:45
212_Flat_GPRS 850 CH128_3D2U_side 5 surface to phantom 10mm
DUT: AC785S-500;Type: WWAN Mobile Hotspot Portable Device;Serial: 014197000002053
Communication System: UID 0, GPRS 850 (3Down, 2Up) (0);Frequency: 824.2 MHz;Duty Cycle: 1:4
Medium parameters used (interpolated): f = 824.2 MHz; σ = 0.978 S/m; ε_r = 55.317; ρ = 1000 kg/m^3
Phantom section: Flat Section
Measurement Standard: DASY5 (IEEE/IEC/ANSI C63.19-2011)
DASY Configuration:

- Area Scan setting - Find Secondary Maximum Within:2.0dB and with a peak SAR value greater than 0.5 W/Kg
- Probe: EX3DV4 - SN3977;ConvF(9.74, 9.74, 9.74); Calibrated: 2014/2/17;
- Sensor-Surface: 2mm (Mechanical Surface Detection)
- Electronics: DAE4 Sn779;Calibrated: 2014/2/25
- Phantom: ELI v5.0;Type: QDOVA002AA;Serial: TP:1133
- Measurement SW: DASY52, Version 52.8 (7);SEMCAD X Version 14.6.10 (7164)

Flat/Area Scan (61x111x1):
Interpolated grid: dx=1.500 mm, dy=1.500 mm
Maximum value of SAR (interpolated) = 0.0508 W/kg

Flat/Zoom Scan (5x5x7)/Cube 0:
Measurement grid: dx=8mm, dy=8mm, dz=5mm
Reference Value = 6.749 V/m; Power Drift = 0.03 dB
Peak SAR (extrapolated) = 0.0600 W/kg
SAR(1 g) = 0.044 W/kg; SAR(10 g) = 0.032 W/kg
Maximum value of SAR (measured) = 0.0530 W/kg

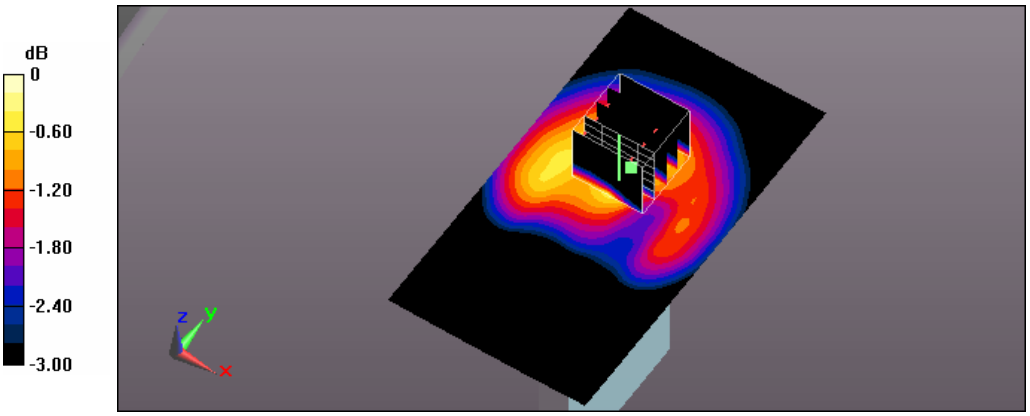

0 dB = 0.0530 W/kg = -12.76 dBW/kg

Test Laboratory: A Test Lab Techno Corp.
Date: 2014/12/12Time: PM 05:01:21
5_Flat_GPRS 850 CH128_3D2U_side 6 surface to phantom 10mm
DUT: AC785S-500;Type: WWAN Mobile Hotspot Portable Device;Serial: 014197000002053
Communication System: UID 0, GPRS 850 (3Down, 2Up) (0);Frequency: 824.2 MHz;Duty Cycle: 1:4
Medium parameters used (interpolated): f = 824.2 MHz; σ = 0.978 S/m; ε_r = 55.317; ρ = 1000 kg/m^3
Phantom section: Flat Section
Measurement Standard: DASY5 (IEEE/IEC/ANSI C63.19-2011)
DASY Configuration:

- Area Scan setting - Find Secondary Maximum Within:2.0dB and with a peak SAR value greater than 0.5 W/Kg
- Probe: EX3DV4 - SN3977;ConvF(9.74, 9.74, 9.74); Calibrated: 2014/2/17;
- Sensor-Surface: 2mm (Mechanical Surface Detection)
- Electronics: DAE4 Sn779;Calibrated: 2014/2/25
- Phantom: ELI v5.0;Type: QDOVA002AA;Serial: TP:1133
- Measurement SW: DASY52, Version 52.8 (7);SEMCAD X Version 14.6.10 (7164)

Flat/Area Scan (61x111x1):
Interpolated grid: dx=1.500 mm, dy=1.500 mm
Maximum value of SAR (interpolated) = 0.222 W/kg

Flat/Zoom Scan (5x5x7)/Cube 0:
Measurement grid: dx=8mm, dy=8mm, dz=5mm
Reference Value = 14.954 V/m; Power Drift = 0.01 dB
Peak SAR (extrapolated) = 0.281 W/kg
SAR(1 g) = 0.157 W/kg; SAR(10 g) = 0.088 W/kg
Maximum value of SAR (measured) = 0.219 W/kg

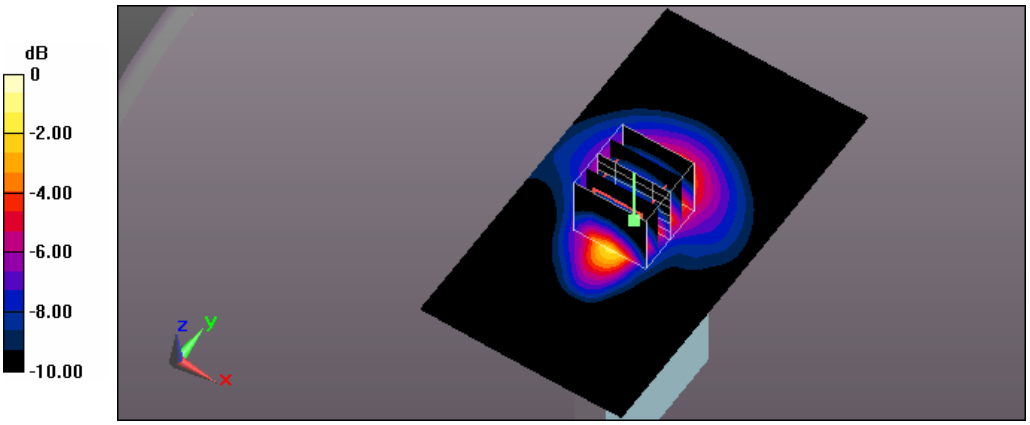

0 dB = 0.219 W/kg = -6.60 dBW/kg

Test Laboratory: A Test Lab Techno Corp.
Date: 2014/12/12Time: PM 06:54:00
11_Flat_EGPRS PCS CH512_1D4U_side 1 surface to phantom 10mm
DUT: AC785S-500;Type: WWAN Mobile Hotspot Portable Device;Serial: 014197000002053
Communication System: UID 0, EGPRS PCS (1Down, 4Up) (0);Frequency: 1850.2 MHz;Duty Cycle: 1:2
Medium parameters used (interpolated): f = 1850.2 MHz; σ = 1.457 S/m; ε_r = 52.373; ρ = 1000 kg/m^3
Phantom section: Flat Section
Measurement Standard: DASY5 (IEEE/IEC/ANSI C63.19-2011)
DASY Configuration:

- Area Scan setting - Find Secondary Maximum Within:2.0dB and with a peak SAR value greater than 0.5 W/Kg
- Probe: EX3DV4 - SN3977;ConvF(7.37, 7.37, 7.37); Calibrated: 2014/2/17;
- Sensor-Surface: 2mm (Mechanical Surface Detection)
- Electronics: DAE4 Sn779;Calibrated: 2014/2/25
- Phantom: ELI v5.0;Type: QDOVA002AA;Serial: TP:1133
- Measurement SW: DASY52, Version 52.8 (7);SEMCAD X Version 14.6.10 (7164)

Flat/Area Scan (71x111x1):
Interpolated grid: dx=1.500 mm, dy=1.500 mm
Maximum value of SAR (interpolated) = 1.20 W/kg

Flat/Zoom Scan (5x5x7)/Cube 0:
Measurement grid: dx=8mm, dy=8mm, dz=5mm
Reference Value = 16.047 V/m; Power Drift = -0.08 dB
Peak SAR (extrapolated) = 1.40 W/kg
SAR(1 g) = 0.814 W/kg; SAR(10 g) = 0.455 W/kg
Maximum value of SAR (measured) = 1.12 W/kg

Flat/Zoom Scan (5x5x7)/Cube 1:
Measurement grid: dx=8mm, dy=8mm, dz=5mm
Reference Value = 16.047 V/m; Power Drift = -0.08 dB
Peak SAR (extrapolated) = 0.871 W/kg
SAR(1 g) = 0.581 W/kg; SAR(10 g) = 0.371 W/kg
Maximum value of SAR (measured) = 0.736 W/kg

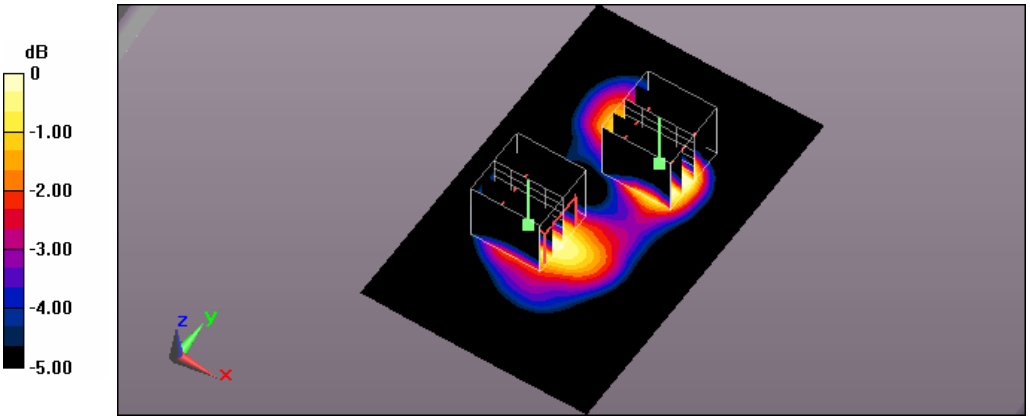

0 dB = 0.736 W/kg = -1.33 dBW/kg

Test Laboratory: A Test Lab Techno Corp.
Date: 2014/12/12Time: PM 08:12:15
12_Flat_EGPRS PCS CH512_1D4U_side 2 surface to phantom 10mm
DUT: AC785S-500;Type: WWAN Mobile Hotspot Portable Device;Serial: 014197000002053
Communication System: UID 0, EGPRS PCS (1Down, 4Up) (0);Frequency: 1850.2 MHz;Duty Cycle: 1:2
Medium parameters used (interpolated): f = 1850.2 MHz; σ = 1.457 S/m; ε_r = 52.373; ρ = 1000 kg/m^3
Phantom section: Flat Section
Measurement Standard: DASY5 (IEEE/IEC/ANSI C63.19-2011)
DASY Configuration:

- Area Scan setting - Find Secondary Maximum Within:2.0dB and with a peak SAR value greater than 0.5 W/Kg
- Probe: EX3DV4 - SN3977;ConvF(7.37, 7.37, 7.37); Calibrated: 2014/2/17;
- Sensor-Surface: 2mm (Mechanical Surface Detection)
- Electronics: DAE4 Sn779;Calibrated: 2014/2/25
- Phantom: ELI v5.0;Type: QDOVA002AA;Serial: TP:1133
- Measurement SW: DASY52, Version 52.8 (7);SEMCAD X Version 14.6.10 (7164)

Flat/Area Scan (71x111x1):
Interpolated grid: dx=1.500 mm, dy=1.500 mm
Maximum value of SAR (interpolated) = 0.623 W/kg

Flat/Zoom Scan (5x5x7)/Cube 0:
Measurement grid: dx=8mm, dy=8mm, dz=5mm
Reference Value = 16.203 V/m; Power Drift = 0.06 dB
Peak SAR (extrapolated) = 0.696 W/kg
SAR(1 g) = 0.474 W/kg; SAR(10 g) = 0.304 W/kg
Maximum value of SAR (measured) = 0.591 W/kg

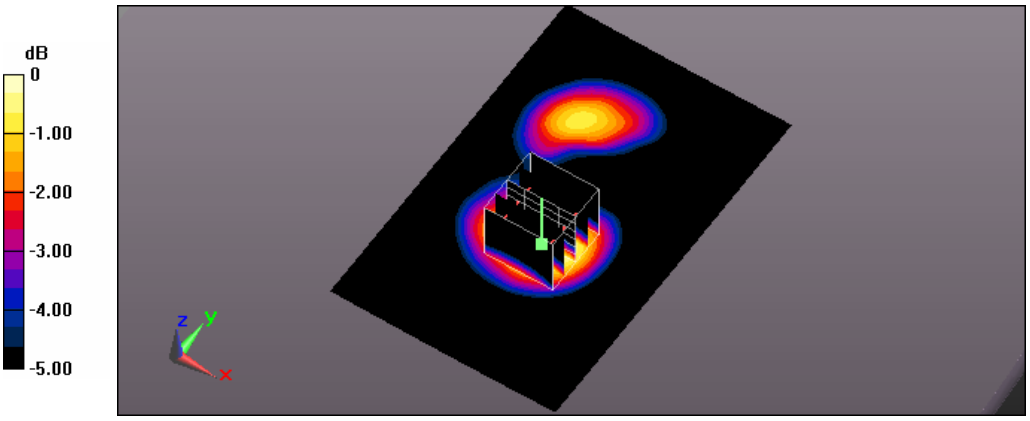

0 dB = 0.591 W/kg = -2.28 dBW/kg

Test Laboratory: A Test Lab Techno Corp.
Date: 2014/12/12Time: PM 08:34:58
13_Flat_EGPRS PCS CH512_1D4U_side 3 surface to phantom 10mm
DUT: AC785S-500;Type: WWAN Mobile Hotspot Portable Device;Serial: 014197000002053
Communication System: UID 0, EGPRS PCS (1Down, 4Up) (0);Frequency: 1850.2 MHz;Duty Cycle: 1:2
Medium parameters used (interpolated): f = 1850.2 MHz; σ = 1.457 S/m; ε_r = 52.373; ρ = 1000 kg/m^3
Phantom section: Flat Section
Measurement Standard: DASY5 (IEEE/IEC/ANSI C63.19-2011)
DASY Configuration:

- Area Scan setting - Find Secondary Maximum Within:2.0dB and with a peak SAR value greater than 0.5 W/Kg
- Probe: EX3DV4 - SN3977;ConvF(7.37, 7.37, 7.37); Calibrated: 2014/2/17;
- Sensor-Surface: 2mm (Mechanical Surface Detection)
- Electronics: DAE4 Sn779;Calibrated: 2014/2/25
- Phantom: ELI v5.0;Type: QDOVA002AA;Serial: TP:1133
- Measurement SW: DASY52, Version 52.8 (7);SEMCAD X Version 14.6.10 (7164)

Flat/Area Scan (61x111x1):
Interpolated grid: dx=1.500 mm, dy=1.500 mm
Maximum value of SAR (interpolated) = 0.149 W/kg

Flat/Zoom Scan (5x5x7)/Cube 0:
Measurement grid: dx=8mm, dy=8mm, dz=5mm
Reference Value = 10.052 V/m; Power Drift = 0.14 dB
Peak SAR (extrapolated) = 0.180 W/kg
SAR(1 g) = 0.114 W/kg; SAR(10 g) = 0.069 W/kg
Maximum value of SAR (measured) = 0.146 W/kg

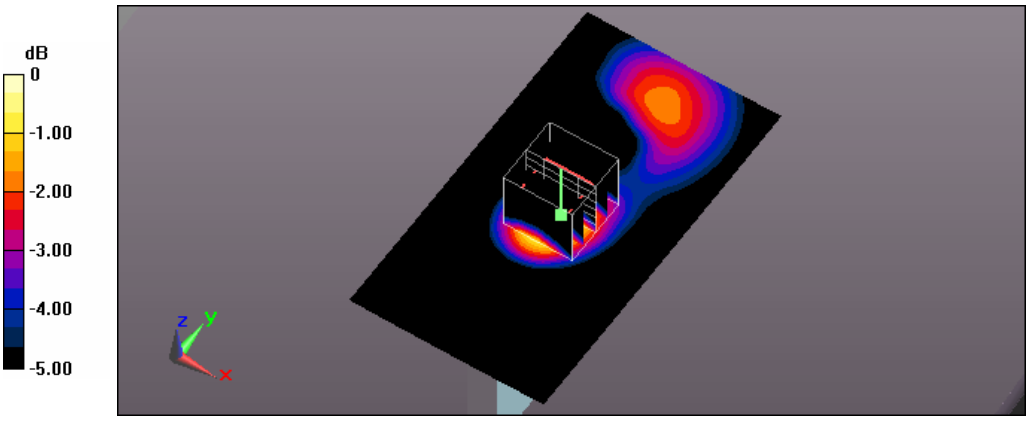

0 dB = 0.146 W/kg = -8.36 dBW/kg

Test Laboratory: A Test Lab Techno Corp.
Date: 2014/12/12Time: PM 08:53:39
14_Flat_EGPRS PCS CH512_1D4U_side 4 surface to phantom 10mm
DUT: AC785S-500;Type: WWAN Mobile Hotspot Portable Device;Serial: 014197000002053
Communication System: UID 0, EGPRS PCS (1Down, 4Up) (0);Frequency: 1850.2 MHz;Duty Cycle: 1:2
Medium parameters used (interpolated): f = 1850.2 MHz; σ = 1.457 S/m; ε_r = 52.373; ρ = 1000 kg/m^3
Phantom section: Flat Section
Measurement Standard: DASY5 (IEEE/IEC/ANSI C63.19-2011)
DASY Configuration:

- Area Scan setting - Find Secondary Maximum Within:2.0dB and with a peak SAR value greater than 0.5 W/Kg
- Probe: EX3DV4 - SN3977;ConvF(7.37, 7.37, 7.37); Calibrated: 2014/2/17;
- Sensor-Surface: 2mm (Mechanical Surface Detection)
- Electronics: DAE4 Sn779;Calibrated: 2014/2/25
- Phantom: ELI v5.0;Type: QDOVA002AA;Serial: TP:1133
- Measurement SW: DASY52, Version 52.8 (7);SEMCAD X Version 14.6.10 (7164)

Flat/Area Scan (61x111x1):
Interpolated grid: dx=1.500 mm, dy=1.500 mm
Maximum value of SAR (interpolated) = 0.558 W/kg

Flat/Zoom Scan (5x5x7)/Cube 0:
Measurement grid: dx=8mm, dy=8mm, dz=5mm
Reference Value = 13.922 V/m; Power Drift = -0.02 dB
Peak SAR (extrapolated) = 0.681 W/kg
SAR(1 g) = 0.419 W/kg; SAR(10 g) = 0.249 W/kg
Maximum value of SAR (measured) = 0.556 W/kg

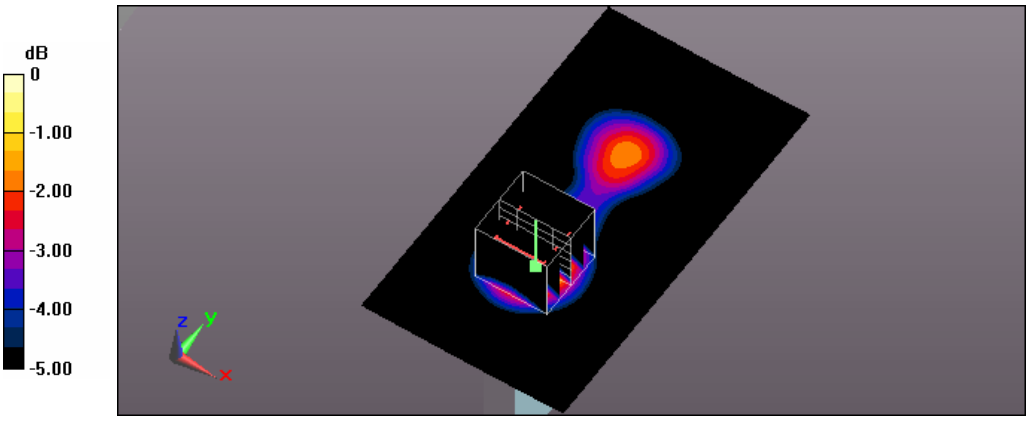

0 dB = 0.556 W/kg = -2.55 dBW/kg

Test Laboratory: A Test Lab Techno Corp.
Date: 2014/12/12Time: PM 09:19:16
15_Flat_EGPRS PCS CH512_1D4U_side 6 surface to phantom 10mm
DUT: AC785S-500;Type: WWAN Mobile Hotspot Portable Device;Serial: 014197000002053
Communication System: UID 0, EGPRS PCS (1Down, 4Up) (0);Frequency: 1850.2 MHz;Duty Cycle: 1:2
Medium parameters used (interpolated): f = 1850.2 MHz; σ = 1.457 S/m; ε_r = 52.373; ρ = 1000 kg/m^3
Phantom section: Flat Section
Measurement Standard: DASY5 (IEEE/IEC/ANSI C63.19-2011)
DASY Configuration:

- Area Scan setting - Find Secondary Maximum Within:2.0dB and with a peak SAR value greater than 0.5 W/Kg
- Probe: EX3DV4 - SN3977;ConvF(7.37, 7.37, 7.37); Calibrated: 2014/2/17;
- Sensor-Surface: 2mm (Mechanical Surface Detection)
- Electronics: DAE4 Sn779;Calibrated: 2014/2/25
- Phantom: ELI v5.0;Type: QDOVA002AA;Serial: TP:1133
- Measurement SW: DASY52, Version 52.8 (7);SEMCAD X Version 14.6.10 (7164)

Flat/Area Scan (61x111x1):
Interpolated grid: dx=1.500 mm, dy=1.500 mm
Maximum value of SAR (interpolated) = 0.970 W/kg

Flat/Zoom Scan (5x5x7)/Cube 0:
Measurement grid: dx=8mm, dy=8mm, dz=5mm
Reference Value = 25.340 V/m; Power Drift = -0.03 dB
Peak SAR (extrapolated) = 1.23 W/kg
SAR(1 g) = 0.698 W/kg; SAR(10 g) = 0.377 W/kg
Maximum value of SAR (measured) = 0.976 W/kg

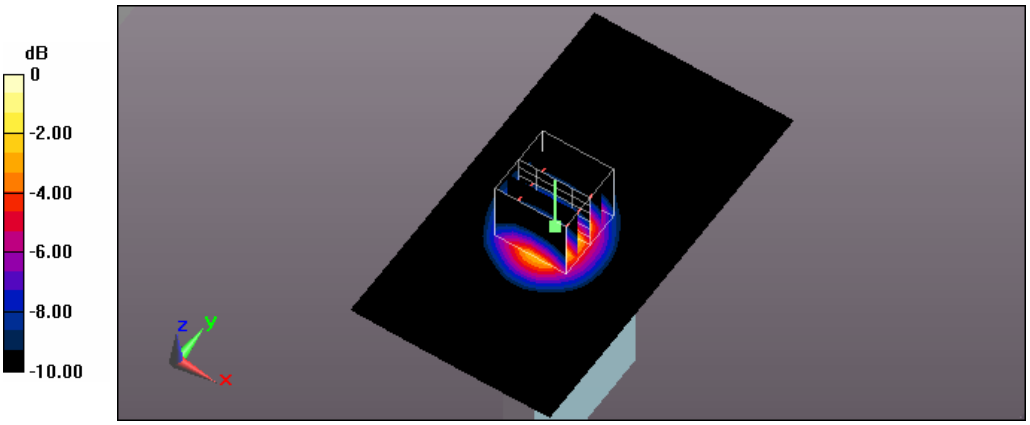

0 dB = 0.976 W/kg = -0.11 dBW/kg

Test Laboratory: A Test Lab Techno Corp.
Date: 2014/12/12Time: PM 07:24:14
203_Flat_EGPRS PCS CH661_1D4U_side 1 surface to phantom 10mm
DUT: AC785S-500;Type: WWAN Mobile Hotspot Portable Device;Serial: 014197000002053
Communication System: UID 0, EGPRS PCS (1Down, 4Up) (0);Frequency: 1880 MHz;Duty Cycle: 1:2
Medium parameters used: f = 1880 MHz; σ = 1.458 S/m; ε_r = 52.636; ρ = 1000 kg/m^3
Phantom section: Flat Section
Measurement Standard: DASY5 (IEEE/IEC/ANSI C63.19-2011)
DASY Configuration:

- Area Scan setting - Find Secondary Maximum Within:2.0dB and with a peak SAR value greater than 0.5 W/Kg
- Probe: EX3DV4 - SN3977;ConvF(7.37, 7.37, 7.37); Calibrated: 2014/2/17;
- Sensor-Surface: 2mm (Mechanical Surface Detection)
- Electronics: DAE4 Sn779;Calibrated: 2014/2/25
- Phantom: ELI v5.0;Type: QDOVA002AA;Serial: TP:1133
- Measurement SW: DASY52, Version 52.8 (7);SEMCAD X Version 14.6.10 (7164)

Flat/Area Scan (71x111x1):
Interpolated grid: dx=1.500 mm, dy=1.500 mm
Maximum value of SAR (interpolated) = 1.15 W/kg

Flat/Zoom Scan (5x5x7)/Cube 0:
Measurement grid: dx=8mm, dy=8mm, dz=5mm
Reference Value = 13.990 V/m; Power Drift = -0.07 dB
Peak SAR (extrapolated) = 1.27 W/kg
SAR(1 g) = 0.750 W/kg; SAR(10 g) = 0.420 W/kg
Maximum value of SAR (measured) = 1.02 W/kg

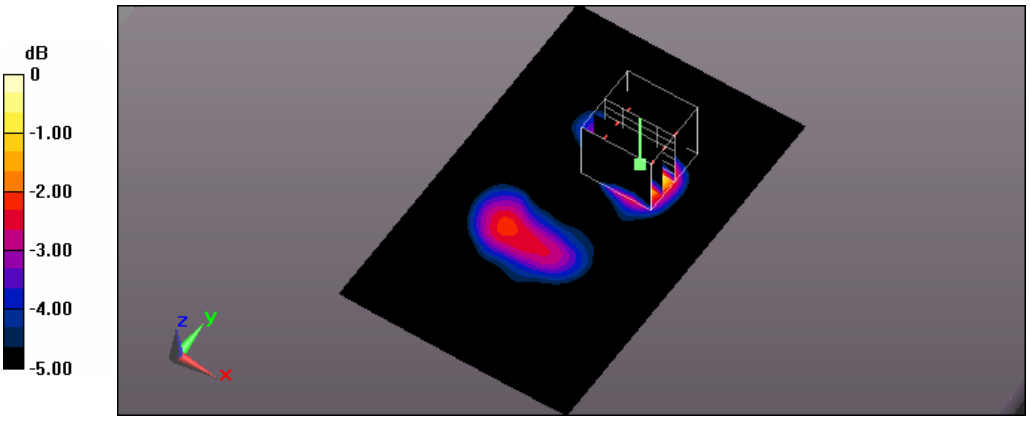

0 dB = 1.02 W/kg = 0.09 dBW/kg

Test Laboratory: A Test Lab Techno Corp.
Date: 2014/12/12Time: PM 09:40:59
205_Flat_EGPRS PCS CH661_1D4U_side 6 surface to phantom 10mm
DUT: AC785S-500;Type: WWAN Mobile Hotspot Portable Device;Serial: 014197000002053
Communication System: UID 0, EGPRS PCS (1Down, 4Up) (0);Frequency: 1880 MHz;Duty Cycle: 1:2
Medium parameters used: f = 1880 MHz; σ = 1.458 S/m; ε_r = 52.636; ρ = 1000 kg/m^3
Phantom section: Flat Section
Measurement Standard: DASY5 (IEEE/IEC/ANSI C63.19-2011)
DASY Configuration:

- Area Scan setting - Find Secondary Maximum Within:2.0dB and with a peak SAR value greater than 0.5 W/Kg
- Probe: EX3DV4 - SN3977;ConvF(7.37, 7.37, 7.37); Calibrated: 2014/2/17;
- Sensor-Surface: 2mm (Mechanical Surface Detection)
- Electronics: DAE4 Sn779;Calibrated: 2014/2/25
- Phantom: ELI v5.0;Type: QDOVA002AA;Serial: TP:1133
- Measurement SW: DASY52, Version 52.8 (7);SEMCAD X Version 14.6.10 (7164)

Flat/Area Scan (61x111x1):
Interpolated grid: dx=1.500 mm, dy=1.500 mm
Maximum value of SAR (interpolated) = 0.664 W/kg

Flat/Zoom Scan (5x5x7)/Cube 0:
Measurement grid: dx=8mm, dy=8mm, dz=5mm
Reference Value = 21.005 V/m; Power Drift = -0.04 dB
Peak SAR (extrapolated) = 0.821 W/kg
SAR(1 g) = 0.464 W/kg; SAR(10 g) = 0.253 W/kg
Maximum value of SAR (measured) = 0.652 W/kg

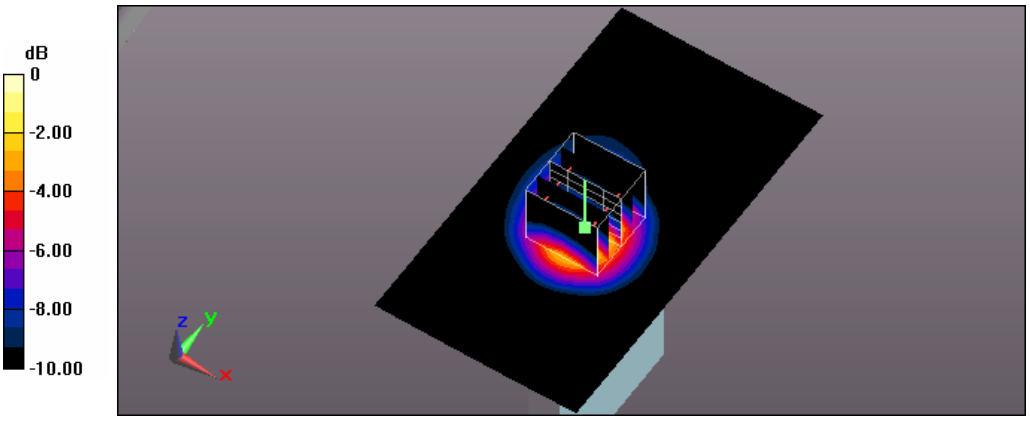

0 dB = 0.652 W/kg = -1.86 dBW/kg

Test Laboratory: A Test Lab Techno Corp.
Date: 2014/12/12Time: PM 07:43:30
204_Flat_EGPRS PCS CH810_1D4U_side 1 surface to phantom 10mm
DUT: AC785S-500;Type: WWAN Mobile Hotspot Portable Device;Serial: 014197000002053
Communication System: UID 0, EGPRS PCS (1Down, 4Up) (0);Frequency: 1909.8 MHz;Duty Cycle: 1:2
Medium parameters used: f = 1910 MHz; σ = 1.496 S/m; ε_r = 52.287; ρ = 1000 kg/m^3
Phantom section: Flat Section
Measurement Standard: DASY5 (IEEE/IEC/ANSI C63.19-2011)
DASY Configuration:

- Area Scan setting - Find Secondary Maximum Within:2.0dB and with a peak SAR value greater than 0.5 W/Kg
- Probe: EX3DV4 - SN3977;ConvF(7.37, 7.37, 7.37); Calibrated: 2014/2/17;
- Sensor-Surface: 2mm (Mechanical Surface Detection)
- Electronics: DAE4 Sn779;Calibrated: 2014/2/25
- Phantom: ELI v5.0;Type: QDOVA002AA;Serial: TP:1133
- Measurement SW: DASY52, Version 52.8 (7);SEMCAD X Version 14.6.10 (7164)

Flat/Area Scan (71x111x1):
Interpolated grid: dx=1.500 mm, dy=1.500 mm
Maximum value of SAR (interpolated) = 1.21 W/kg

Flat/Zoom Scan (5x5x7)/Cube 0:
Measurement grid: dx=8mm, dy=8mm, dz=5mm
Reference Value = 12.772 V/m; Power Drift = -0.04 dB
Peak SAR (extrapolated) = 1.35 W/kg
SAR(1 g) = 0.783 W/kg; SAR(10 g) = 0.436 W/kg
Maximum value of SAR (measured) = 1.08 W/kg

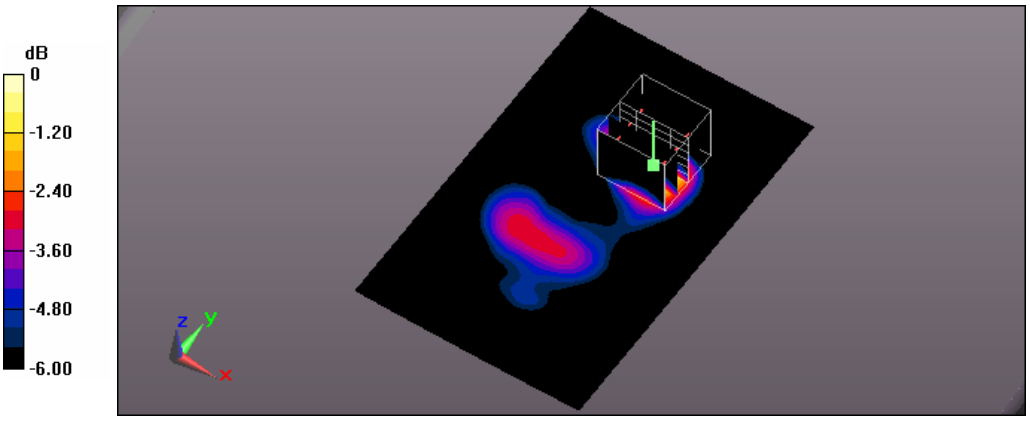

0 dB = 1.08 W/kg = 0.33 dBW/kg

Test Laboratory: A Test Lab Techno Corp.
Date: 2014/12/12Time: PM 09:59:32
206_Flat_EGPRS PCS CH810_1D4U_side 6 surface to phantom 10mm
DUT: AC785S-500;Type: WWAN Mobile Hotspot Portable Device;Serial: 014197000002053
Communication System: UID 0, EGPRS PCS (1Down, 4Up) (0);Frequency: 1909.8 MHz;Duty Cycle: 1:2
Medium parameters used: f = 1910 MHz; σ = 1.496 S/m; ε_r = 52.287; ρ = 1000 kg/m^3
Phantom section: Flat Section
Measurement Standard: DASY5 (IEEE/IEC/ANSI C63.19-2011)
DASY Configuration:

- Area Scan setting - Find Secondary Maximum Within:2.0dB and with a peak SAR value greater than 0.5 W/Kg
- Probe: EX3DV4 - SN3977;ConvF(7.37, 7.37, 7.37); Calibrated: 2014/2/17;
- Sensor-Surface: 2mm (Mechanical Surface Detection)
- Electronics: DAE4 Sn779;Calibrated: 2014/2/25
- Phantom: ELI v5.0;Type: QDOVA002AA;Serial: TP:1133
- Measurement SW: DASY52, Version 52.8 (7);SEMCAD X Version 14.6.10 (7164)

Flat/Area Scan (61x111x1):
Interpolated grid: dx=1.500 mm, dy=1.500 mm
Maximum value of SAR (interpolated) = 0.404 W/kg

Flat/Zoom Scan (5x5x7)/Cube 0:
Measurement grid: dx=8mm, dy=8mm, dz=5mm
Reference Value = 15.989 V/m; Power Drift = 0.01 dB
Peak SAR (extrapolated) = 0.508 W/kg
SAR(1 g) = 0.291 W/kg; SAR(10 g) = 0.161 W/kg
Maximum value of SAR (measured) = 0.406 W/kg

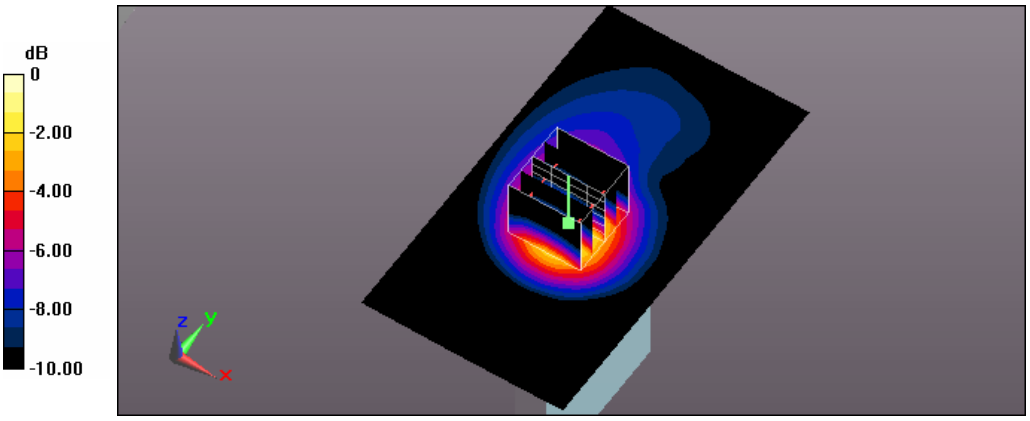

0 dB = 0.406 W/kg = -3.91 dBW/kg

Test Laboratory: A Test Lab Techno Corp.
Date: 2014/12/12Time: PM 10:39:23
207_ Flat_EGPRS PCS CH810_1D4U_original #204_side 1 surface to phantom 10mm_measurement onece
DUT: AC785S-500;Type: WWAN Mobile Hotspot Portable Device;Serial: 014197000002053
Communication System: UID 0, EGPRS PCS (1Down, 4Up) (0);Frequency: 1909.8 MHz;Duty Cycle: 1:2
Medium parameters used: f = 1910 MHz; σ = 1.496 S/m; ε_r = 52.287; ρ = 1000 kg/m^3
Phantom section: Flat Section
Measurement Standard: DASY5 (IEEE/IEC/ANSI C63.19-2011)
DASY Configuration:

- Area Scan setting - Find Secondary Maximum Within:2.0dB and with a peak SAR value greater than 0.5 W/Kg
- Probe: EX3DV4 - SN3977;ConvF(7.37, 7.37, 7.37); Calibrated: 2014/2/17;
- Sensor-Surface: 2mm (Mechanical Surface Detection)
- Electronics: DAE4 Sn779;Calibrated: 2014/2/25
- Phantom: ELI v5.0;Type: QDOVA002AA;Serial: TP:1133
- Measurement SW: DASY52, Version 52.8 (7);SEMCAD X Version 14.6.10 (7164)

Flat/Area Scan (71x111x1):
Interpolated grid: dx=1.500 mm, dy=1.500 mm
Maximum value of SAR (interpolated) = 1.12 W/kg

Flat/Zoom Scan (5x5x7)/Cube 0:
Measurement grid: dx=8mm, dy=8mm, dz=5mm
Reference Value = 12.036 V/m; Power Drift = -0.05 dB
Peak SAR (extrapolated) = 1.23 W/kg
SAR(1 g) = 0.721 W/kg; SAR(10 g) = 0.404 W/kg
Maximum value of SAR (measured) = 0.991 W/kg

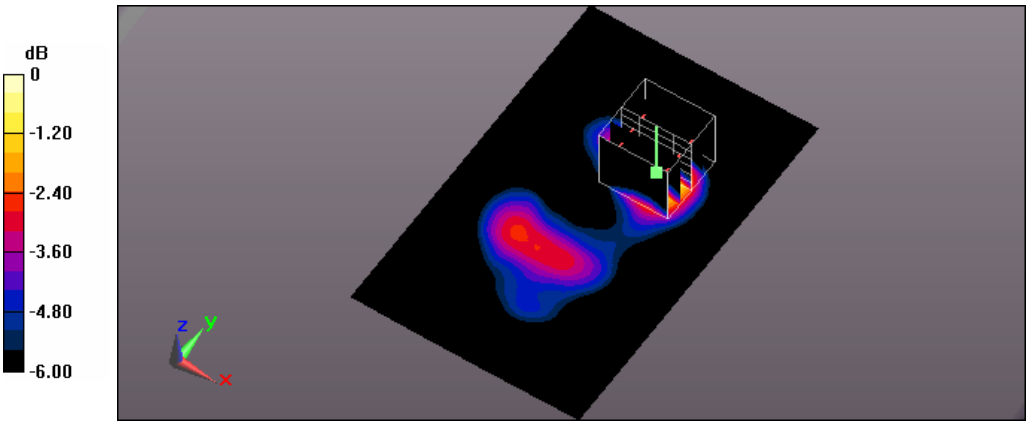

0 dB = 0.991 W/kg = -0.04 dBW/kg

Test Laboratory: A Test Lab Techno Corp.
Date: 2014/11/12Time: PM 08:45:03
21_Flat_WCDMA BandII CH9262_side 1 surface to phantom 10mm
DUT: AC785S-500;Type: WWAN Mobile Hotspot Portable Device;Serial: 014197000002053
Communication System: UID 0, WCDMA Band II (0);Frequency: 1852.4 MHz;Duty Cycle: 1:1
Medium parameters used (interpolated): f = 1852.4 MHz; σ = 1.458 S/m; ε_r = 52.394; ρ = 1000 kg/m^3
Phantom section: Flat Section
Measurement Standard: DASY5 (IEEE/IEC/ANSI C63.19-2011)
DASY Configuration:

- Area Scan setting - Find Secondary Maximum Within:2.0dB and with a peak SAR value greater than 0.5 W/Kg
- Probe: EX3DV4 - SN3977;ConvF(7.37, 7.37, 7.37); Calibrated: 2014/2/17;
- Sensor-Surface: 2mm (Mechanical Surface Detection)
- Electronics: DAE4 Sn779;Calibrated: 2014/2/25
- Phantom: ELI v5.0;Type: QDOVA002AA;Serial: TP:1133
- Measurement SW: DASY52, Version 52.8 (7);SEMCAD X Version 14.6.10 (7164)

Flat/Area Scan (71x111x1):
Interpolated grid: dx=1.500 mm, dy=1.500 mm
Maximum value of SAR (interpolated) = 1.08 W/kg

Flat/Zoom Scan (5x5x7)/Cube 0:
Measurement grid: dx=8mm, dy=8mm, dz=5mm
Reference Value = 14.495 V/m; Power Drift = -0.05 dB
Peak SAR (extrapolated) = 1.31 W/kg
SAR(1 g) = 0.744 W/kg; SAR(10 g) = 0.410 W/kg
Maximum value of SAR (measured) = 1.03 W/kg

Flat/Zoom Scan (5x5x7)/Cube 1:
Measurement grid: dx=8mm, dy=8mm, dz=5mm
Reference Value = 14.495 V/m; Power Drift = -0.05 dB
Peak SAR (extrapolated) = 0.803 W/kg
SAR(1 g) = 0.534 W/kg; SAR(10 g) = 0.340 W/kg
Maximum value of SAR (measured) = 0.666 W/kg

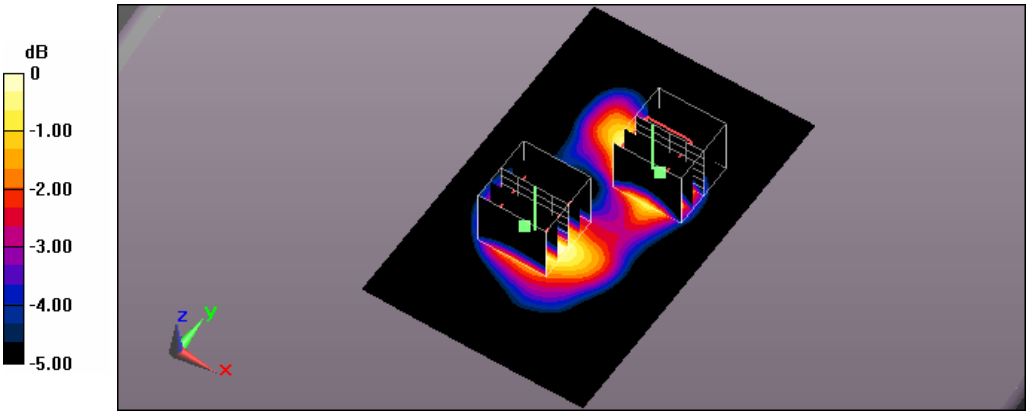

0 dB = 0.666 W/kg = -1.77 dBW/kg

Test Laboratory: A Test Lab Techno Corp.
Date: 2014/11/12Time: PM 09:27:43
22_Flat_WCDMA BandII CH9400_side 1 surface to phantom 10mm
DUT: AC785S-500;Type: WWAN Mobile Hotspot Portable Device;Serial: 014197000002053
Communication System: UID 0, WCDMA Band II (0);Frequency: 1880 MHz;Duty Cycle: 1:1
Medium parameters used: f = 1880 MHz; σ = 1.458 S/m; ε_r = 52.636; ρ = 1000 kg/m^3
Phantom section: Flat Section
Measurement Standard: DASY5 (IEEE/IEC/ANSI C63.19-2011)
DASY Configuration:

- Area Scan setting - Find Secondary Maximum Within:2.0dB and with a peak SAR value greater than 0.5 W/Kg
- Probe: EX3DV4 - SN3977;ConvF(7.37, 7.37, 7.37); Calibrated: 2014/2/17;
- Sensor-Surface: 2mm (Mechanical Surface Detection)
- Electronics: DAE4 Sn779;Calibrated: 2014/2/25
- Phantom: ELI v5.0;Type: QDOVA002AA;Serial: TP:1133
- Measurement SW: DASY52, Version 52.8 (7);SEMCAD X Version 14.6.10 (7164)

Flat/Area Scan (71x111x1):
Interpolated grid: dx=1.500 mm, dy=1.500 mm
Maximum value of SAR (interpolated) = 1.27 W/kg

Flat/Zoom Scan (5x5x7)/Cube 0:
Measurement grid: dx=8mm, dy=8mm, dz=5mm
Reference Value = 13.844 V/m; Power Drift = 0.10 dB
Peak SAR (extrapolated) = 1.46 W/kg
SAR(1 g) = 0.835 W/kg; SAR(10 g) = 0.462 W/kg
Maximum value of SAR (measured) = 1.15 W/kg

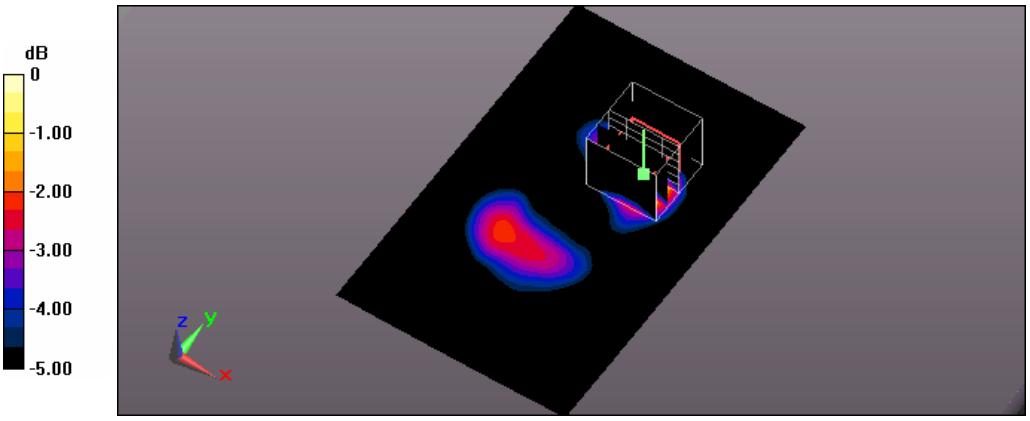

0 dB = 1.15 W/kg = 0.61 dBW/kg

Test Laboratory: A Test Lab Techno Corp.
Date: 2014/11/12Time: PM 07:53:53
16_Flat_WCDMA BandII CH9538_side 1 surface to phantom 10mm
DUT: AC785S-500;Type: WWAN Mobile Hotspot Portable Device;Serial: 014197000002053
Communication System: UID 0, WCDMA Band II (0);Frequency: 1907.6 MHz;Duty Cycle: 1:1
Medium parameters used: f = 1908 MHz; σ = 1.491 S/m; ε_r = 52.317; ρ = 1000 kg/m^3
Phantom section: Flat Section
Measurement Standard: DASY5 (IEEE/IEC/ANSI C63.19-2011)
DASY Configuration:

- Area Scan setting - Find Secondary Maximum Within:2.0dB and with a peak SAR value greater than 0.5 W/Kg
- Probe: EX3DV4 - SN3977;ConvF(7.37, 7.37, 7.37); Calibrated: 2014/2/17;
- Sensor-Surface: 2mm (Mechanical Surface Detection)
- Electronics: DAE4 Sn779;Calibrated: 2014/2/25
- Phantom: ELI v5.0;Type: QDOVA002AA;Serial: TP:1133
- Measurement SW: DASY52, Version 52.8 (7);SEMCAD X Version 14.6.10 (7164)

Flat/Area Scan (71x111x1):
Interpolated grid: dx=1.500 mm, dy=1.500 mm
Maximum value of SAR (interpolated) = 1.59 W/kg

Flat/Zoom Scan (5x5x7)/Cube 0:
Measurement grid: dx=8mm, dy=8mm, dz=5mm
Reference Value = 13.919 V/m; Power Drift = -0.04 dB
Peak SAR (extrapolated) = 1.74 W/kg
SAR(1 g) = 0.992 W/kg; SAR(10 g) = 0.548 W/kg
Maximum value of SAR (measured) = 1.36 W/kg

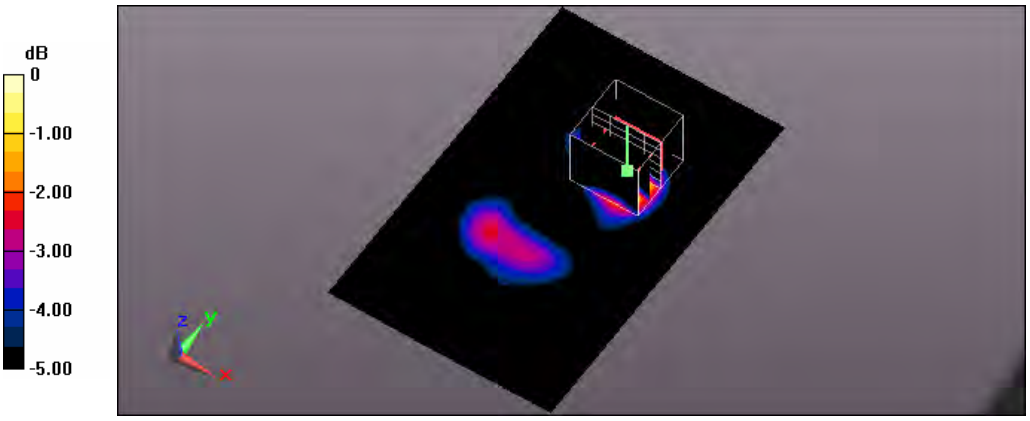

0 dB = 1.36 W/kg = 1.34 dBW/kg

Test Laboratory: A Test Lab Techno Corp.
Date: 2014/11/12Time: PM 08:13:58
17_Flat_WCDMA BandII CH9538_side 2 surface to phantom 10mm
DUT: AC785S-500;Type: WWAN Mobile Hotspot Portable Device;Serial: 014197000002053
Communication System: UID 0, WCDMA Band II (0);Frequency: 1907.6 MHz;Duty Cycle: 1:1
Medium parameters used: f = 1908 MHz; σ = 1.491 S/m; ε_r = 52.317; ρ = 1000 kg/m^3
Phantom section: Flat Section
Measurement Standard: DASY5 (IEEE/IEC/ANSI C63.19-2011)
DASY Configuration:

- Area Scan setting - Find Secondary Maximum Within:2.0dB and with a peak SAR value greater than 0.5 W/Kg
- Probe: EX3DV4 - SN3977;ConvF(7.37, 7.37, 7.37); Calibrated: 2014/2/17;
- Sensor-Surface: 2mm (Mechanical Surface Detection)
- Electronics: DAE4 Sn779;Calibrated: 2014/2/25
- Phantom: ELI v5.0;Type: QDOVA002AA;Serial: TP:1133
- Measurement SW: DASY52, Version 52.8 (7);SEMCAD X Version 14.6.10 (7164)

Flat/Area Scan (71x111x1):
Interpolated grid: dx=1.500 mm, dy=1.500 mm
Maximum value of SAR (interpolated) = 0.602 W/kg

Flat/Zoom Scan (5x5x7)/Cube 0:
Measurement grid: dx=8mm, dy=8mm, dz=5mm
Reference Value = 13.076 V/m; Power Drift = -0.01 dB
Peak SAR (extrapolated) = 0.741 W/kg
SAR(1 g) = 0.450 W/kg; SAR(10 g) = 0.259 W/kg
Maximum value of SAR (measured) = 0.572 W/kg

Flat/Zoom Scan (5x5x7)/Cube 1:
Measurement grid: dx=8mm, dy=8mm, dz=5mm
Reference Value = 13.076 V/m; Power Drift = -0.01 dB
Peak SAR (extrapolated) = 0.636 W/kg
SAR(1 g) = 0.415 W/kg; SAR(10 g) = 0.261 W/kg
Maximum value of SAR (measured) = 0.521 W/kg

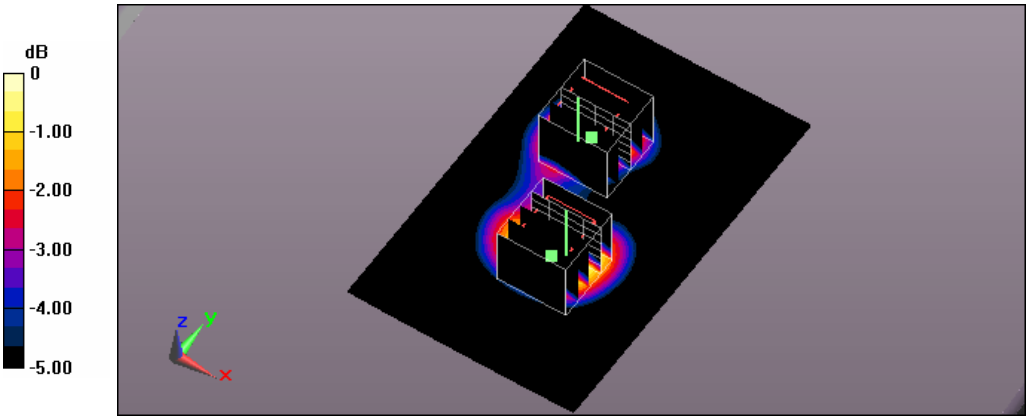

0 dB = 0.521 W/kg = -2.83 dBW/kg

Test Laboratory: A Test Lab Techno Corp.
Date: 2014/11/12Time: PM 10:24:23
18_Flat_WCDMA BandII CH9538_side 3 surface to phantom 10mm
DUT: AC785S-500;Type: WWAN Mobile Hotspot Portable Device;Serial: 014197000002053
Communication System: UID 0, WCDMA Band II (0);Frequency: 1907.6 MHz;Duty Cycle: 1:1
Medium parameters used: f = 1908 MHz; σ = 1.491 S/m; ε_r = 52.317; ρ = 1000 kg/m^3
Phantom section: Flat Section
Measurement Standard: DASY5 (IEEE/IEC/ANSI C63.19-2011)
DASY Configuration:

- Area Scan setting - Find Secondary Maximum Within:2.0dB and with a peak SAR value greater than 0.5 W/Kg
- Probe: EX3DV4 - SN3977;ConvF(7.37, 7.37, 7.37); Calibrated: 2014/2/17;
- Sensor-Surface: 2mm (Mechanical Surface Detection)
- Electronics: DAE4 Sn779;Calibrated: 2014/2/25
- Phantom: ELI v5.0;Type: QDOVA002AA;Serial: TP:1133
- Measurement SW: DASY52, Version 52.8 (7);SEMCAD X Version 14.6.10 (7164)

Flat/Area Scan (61x111x1):
Interpolated grid: dx=1.500 mm, dy=1.500 mm
Maximum value of SAR (interpolated) = 0.171 W/kg

Flat/Zoom Scan (5x5x7)/Cube 0:
Measurement grid: dx=8mm, dy=8mm, dz=5mm
Reference Value = 10.226 V/m; Power Drift = -0.05 dB
Peak SAR (extrapolated) = 0.205 W/kg
SAR(1 g) = 0.126 W/kg; SAR(10 g) = 0.074 W/kg
Maximum value of SAR (measured) = 0.168 W/kg

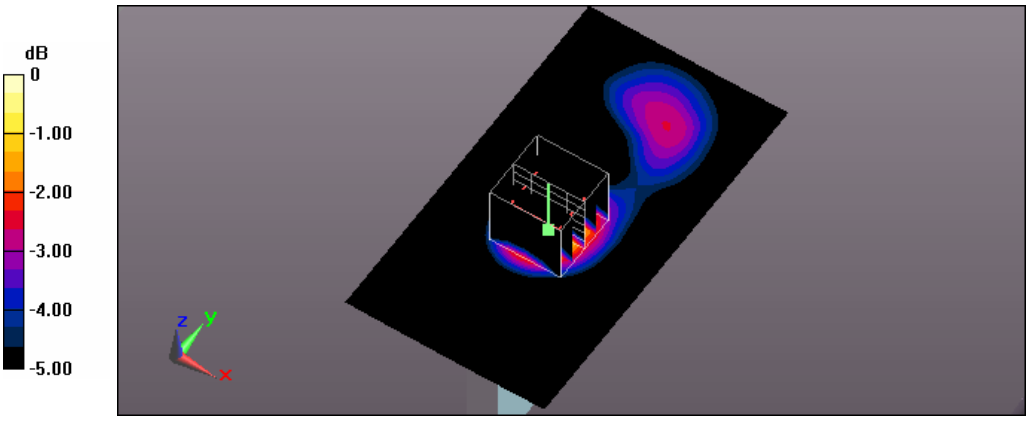

0 dB = 0.168 W/kg = -7.75 dBW/kg

Test Laboratory: A Test Lab Techno Corp.
Date: 2014/11/12Time: PM 10:06:16
19_Flat_WCDMA BandII CH9538_side 4 surface to phantom 10mm
DUT: AC785S-500;Type: WWAN Mobile Hotspot Portable Device;Serial: 014197000002053
Communication System: UID 0, WCDMA Band II (0);Frequency: 1907.6 MHz;Duty Cycle: 1:1
Medium parameters used: f = 1908 MHz; σ = 1.491 S/m; ε_r = 52.317; ρ = 1000 kg/m^3
Phantom section: Flat Section
Measurement Standard: DASY5 (IEEE/IEC/ANSI C63.19-2011)
DASY Configuration:

- Area Scan setting - Find Secondary Maximum Within:2.0dB and with a peak SAR value greater than 0.5 W/Kg
- Probe: EX3DV4 - SN3977;ConvF(7.37, 7.37, 7.37); Calibrated: 2014/2/17;
- Sensor-Surface: 2mm (Mechanical Surface Detection)
- Electronics: DAE4 Sn779;Calibrated: 2014/2/25
- Phantom: ELI v5.0;Type: QDOVA002AA;Serial: TP:1133
- Measurement SW: DASY52, Version 52.8 (7);SEMCAD X Version 14.6.10 (7164)

Flat/Area Scan (61x111x1):
Interpolated grid: dx=1.500 mm, dy=1.500 mm
Maximum value of SAR (interpolated) = 0.536 W/kg

Flat/Zoom Scan (5x5x7)/Cube 0:
Measurement grid: dx=8mm, dy=8mm, dz=5mm
Reference Value = 11.960 V/m; Power Drift = -0.11 dB
Peak SAR (extrapolated) = 0.633 W/kg
SAR(1 g) = 0.387 W/kg; SAR(10 g) = 0.228 W/kg
Maximum value of SAR (measured) = 0.517 W/kg

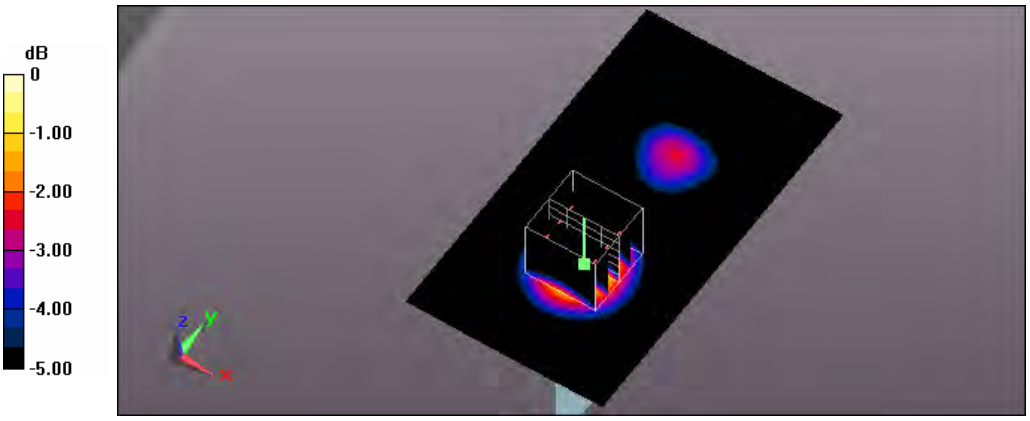

0 dB = 0.517 W/kg = -2.87 dBW/kg

Test Laboratory: A Test Lab Techno Corp.
Date: 2014/11/12Time: PM 10:44:37
20_Flat_WCDMA BandII CH9538_side 6 surface to phantom 10mm
DUT: AC785S-500;Type: WWAN Mobile Hotspot Portable Device;Serial: 014197000002053
Communication System: UID 0, WCDMA Band II (0);Frequency: 1907.6 MHz;Duty Cycle: 1:1
Medium parameters used: f = 1908 MHz; σ = 1.491 S/m; ε_r = 52.317; ρ = 1000 kg/m^3
Phantom section: Flat Section
Measurement Standard: DASY5 (IEEE/IEC/ANSI C63.19-2011)
DASY Configuration:

- Area Scan setting - Find Secondary Maximum Within:2.0dB and with a peak SAR value greater than 0.5 W/Kg
- Probe: EX3DV4 - SN3977;ConvF(7.37, 7.37, 7.37); Calibrated: 2014/2/17;
- Sensor-Surface: 2mm (Mechanical Surface Detection)
- Electronics: DAE4 Sn779;Calibrated: 2014/2/25
- Phantom: ELI v5.0;Type: QDOVA002AA;Serial: TP:1133
- Measurement SW: DASY52, Version 52.8 (7);SEMCAD X Version 14.6.10 (7164)

Flat/Area Scan (61x111x1):
Interpolated grid: dx=1.500 mm, dy=1.500 mm
Maximum value of SAR (interpolated) = 0.426 W/kg

Flat/Zoom Scan (5x5x7)/Cube 0:
Measurement grid: dx=8mm, dy=8mm, dz=5mm
Reference Value = 15.621 V/m; Power Drift = 0.09 dB
Peak SAR (extrapolated) = 0.555 W/kg
SAR(1 g) = 0.313 W/kg; SAR(10 g) = 0.173 W/kg
Maximum value of SAR (measured) = 0.439 W/kg

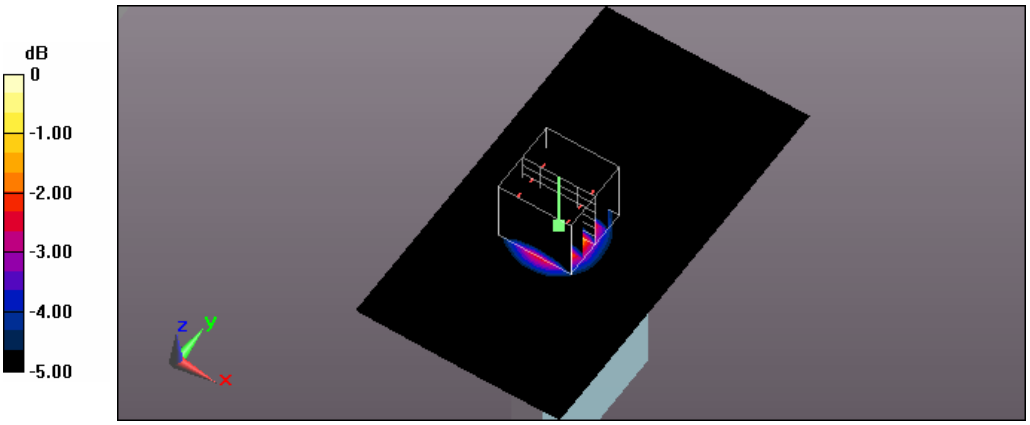

0 dB = 0.439 W/kg = -3.58 dBW/kg

Test Laboratory: A Test Lab Techno Corp.
Date: 2014/9/26Time: PM 08:53:43
28_Flat_WCDMA BandIV CH1312_side 6 surface to phantom 10mm
DUT: AC785S-500;Type: WWAN Mobile Hotspot Portable Device;Serial: 014197000002053
Communication System: UID 0, WCDMA Band IV (0);Frequency: 1712.4 MHz;Duty Cycle: 1:1
Medium parameters used (interpolated): f = 1712.4 MHz; σ = 1.486 S/m; ε_r = 54.527; ρ = 1000 kg/m^3
Phantom section: Flat Section
Measurement Standard: DASY5 (IEEE/IEC/ANSI C63.19-2011)
DASY Configuration:

- Area Scan setting - Find Secondary Maximum Within:2.0dB and with a peak SAR value greater than 0.5 W/Kg
- Probe: EX3DV4 - SN3977;ConvF(7.69, 7.69, 7.69); Calibrated: 2014/2/17;
- Sensor-Surface: 2mm (Mechanical Surface Detection)
- Electronics: DAE4 Sn779;Calibrated: 2014/2/25
- Phantom: ELI v5.0;Type: QDOVA002AA;Serial: TP:1133
- Measurement SW: DASY52, Version 52.8 (7);SEMCAD X Version 14.6.10 (7164)

Flat/Area Scan (61x111x1):
Interpolated grid: dx=1.500 mm, dy=1.500 mm
Maximum value of SAR (interpolated) = 1.56 W/kg

Flat/Zoom Scan (5x5x7)/Cube 0:
Measurement grid: dx=8mm, dy=8mm, dz=5mm
Reference Value = 29.951 V/m; Power Drift = 0.10 dB
Peak SAR (extrapolated) = 1.88 W/kg
SAR(1 g) = 1.09 W/kg; SAR(10 g) = 0.576 W/kg
Maximum value of SAR (measured) = 1.50 W/kg

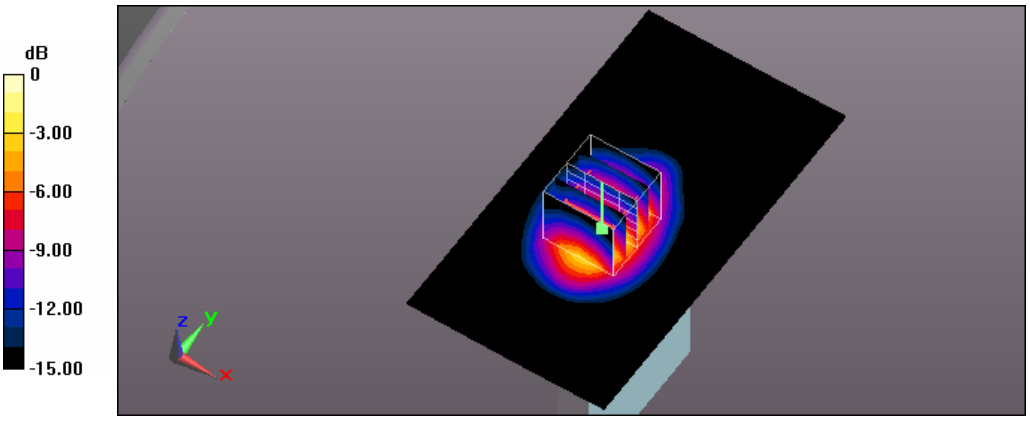

0 dB = 1.50 W/kg = 1.76 dBW/kg

Test Laboratory: A Test Lab Techno Corp.
Date: 2014/9/26Time: PM 09:25:54
29_Flat_WCDMA BandIV CH1413_side 6 surface to phantom 10mm
DUT: AC785S-500;Type: WWAN Mobile Hotspot Portable Device;Serial: 014197000002053
Communication System: UID 0, WCDMA Band IV (0);Frequency: 1732.6 MHz;Duty Cycle: 1:1
Medium parameters used: f = 1733 MHz; σ = 1.506 S/m; ε_r = 54.61; ρ = 1000 kg/m^3
Phantom section: Flat Section
Measurement Standard: DASY5 (IEEE/IEC/ANSI C63.19-2011)
DASY Configuration:

- Area Scan setting - Find Secondary Maximum Within:2.0dB and with a peak SAR value greater than 0.5 W/Kg
- Probe: EX3DV4 - SN3977;ConvF(7.69, 7.69, 7.69); Calibrated: 2014/2/17;
- Sensor-Surface: 2mm (Mechanical Surface Detection)
- Electronics: DAE4 Sn779;Calibrated: 2014/2/25
- Phantom: ELI v5.0;Type: QDOVA002AA;Serial: TP:1133
- Measurement SW: DASY52, Version 52.8 (7);SEMCAD X Version 14.6.10 (7164)

Flat/Area Scan (61x111x1):
Interpolated grid: dx=1.500 mm, dy=1.500 mm
Maximum value of SAR (interpolated) = 1.57 W/kg

Flat/Zoom Scan (5x5x7)/Cube 0:
Measurement grid: dx=8mm, dy=8mm, dz=5mm
Reference Value = 29.903 V/m; Power Drift = -0.02 dB
Peak SAR (extrapolated) = 1.87 W/kg
SAR(1 g) = 1.08 W/kg; SAR(10 g) = 0.571 W/kg
Maximum value of SAR (measured) = 1.49 W/kg

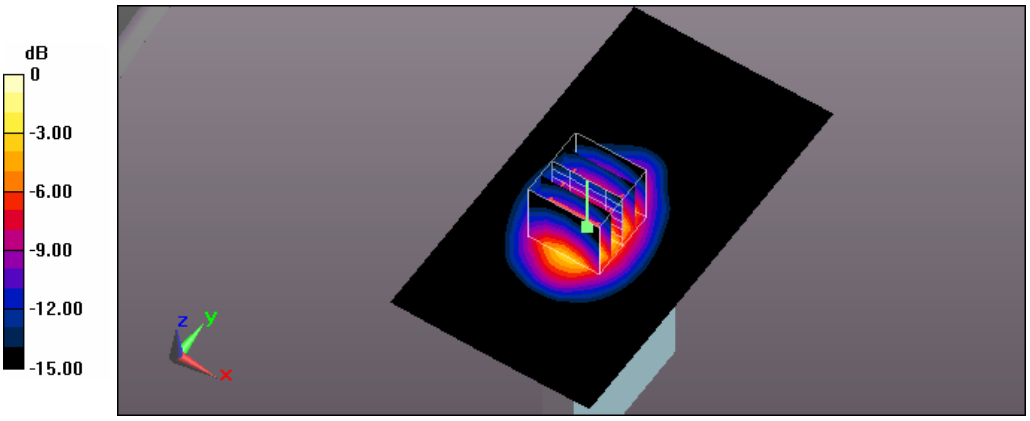

0 dB = 1.49 W/kg = 1.73 dBW/kg

Test Laboratory: A Test Lab Techno Corp.
Date: 2014/9/26Time: PM 03:14:33
23_Flat_WCDMA BandIV CH1513_side 1 surface to phantom 10mm
DUT: AC785S-500;Type: WWAN Mobile Hotspot Portable Device;Serial: 014197000002053
Communication System: UID 0, WCDMA Band IV (0);Frequency: 1752.6 MHz;Duty Cycle: 1:1
Medium parameters used: f = 1753 MHz; σ = 1.518 S/m; ε_r = 54.718; ρ = 1000 kg/m^3
Phantom section: Flat Section
Measurement Standard: DASY5 (IEEE/IEC/ANSI C63.19-2011)
DASY Configuration:

- Area Scan setting - Find Secondary Maximum Within:2.0dB and with a peak SAR value greater than 0.5 W/Kg
- Probe: EX3DV4 - SN3977;ConvF(7.69, 7.69, 7.69); Calibrated: 2014/2/17;
- Sensor-Surface: 2mm (Mechanical Surface Detection)
- Electronics: DAE4 Sn779;Calibrated: 2014/2/25
- Phantom: ELI v5.0;Type: QDOVA002AA;Serial: TP:1133
- Measurement SW: DASY52, Version 52.8 (7);SEMCAD X Version 14.6.10 (7164)

Flat/Area Scan (71x111x1):
Interpolated grid: dx=1.500 mm, dy=1.500 mm
Maximum value of SAR (interpolated) = 0.907 W/kg

Flat/Zoom Scan (5x5x7)/Cube 0:
Measurement grid: dx=8mm, dy=8mm, dz=5mm
Reference Value = 17.989 V/m; Power Drift = 0.16 dB
Peak SAR (extrapolated) = 1.05 W/kg
SAR(1 g) = 0.628 W/kg; SAR(10 g) = 0.399 W/kg
Maximum value of SAR (measured) = 0.871 W/kg

Flat/Zoom Scan (5x5x7)/Cube 1:
Measurement grid: dx=8mm, dy=8mm, dz=5mm
Reference Value = 17.989 V/m; Power Drift = 0.16 dB
Peak SAR (extrapolated) = 1.28 W/kg
SAR(1 g) = 0.722 W/kg; SAR(10 g) = 0.403 W/kg
Maximum value of SAR (measured) = 0.962 W/kg

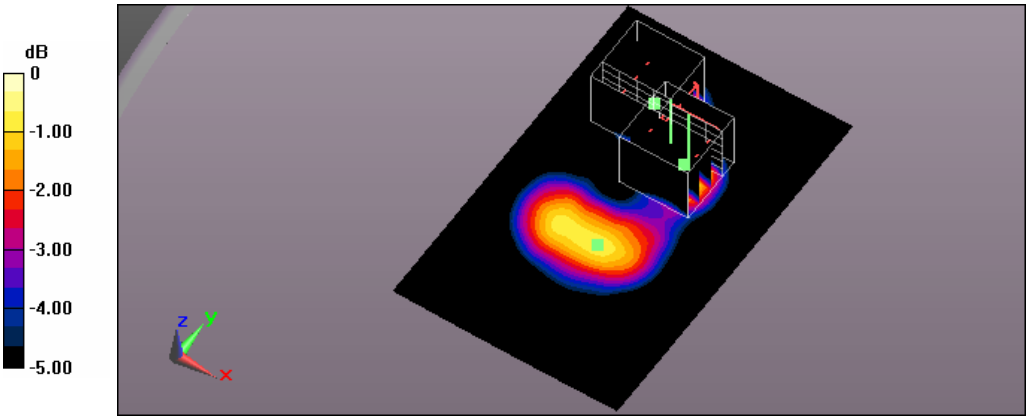

0 dB = 0.962 W/kg = -0.17 dBW/kg

Test Laboratory: A Test Lab Techno Corp.
Date: 2014/9/26Time: PM 05:19:53
24_Flat_WCDMA BandIV CH1513_side 2 surface to phantom 10mm
DUT: AC785S-500;Type: WWAN Mobile Hotspot Portable Device;Serial: 014197000002053
Communication System: UID 0, WCDMA Band IV (0);Frequency: 1752.6 MHz;Duty Cycle: 1:1
Medium parameters used: f = 1753 MHz; σ = 1.518 S/m; ε_r = 54.718; ρ = 1000 kg/m^3
Phantom section: Flat Section
Measurement Standard: DASY5 (IEEE/IEC/ANSI C63.19-2011)
DASY Configuration:

- Area Scan setting - Find Secondary Maximum Within:2.0dB and with a peak SAR value greater than 0.5 W/Kg
- Probe: EX3DV4 - SN3977;ConvF(7.69, 7.69, 7.69); Calibrated: 2014/2/17;
- Sensor-Surface: 2mm (Mechanical Surface Detection)
- Electronics: DAE4 Sn779;Calibrated: 2014/2/25
- Phantom: ELI v5.0;Type: QDOVA002AA;Serial: TP:1133
- Measurement SW: DASY52, Version 52.8 (7);SEMCAD X Version 14.6.10 (7164)

Flat/Area Scan (71x111x1):
Interpolated grid: dx=1.500 mm, dy=1.500 mm
Maximum value of SAR (interpolated) = 0.596 W/kg

Flat/Zoom Scan (5x5x7)/Cube 0:
Measurement grid: dx=8mm, dy=8mm, dz=5mm
Reference Value = 17.084 V/m; Power Drift = 0.07 dB
Peak SAR (extrapolated) = 0.720 W/kg
SAR(1 g) = 0.442 W/kg; SAR(10 g) = 0.261 W/kg
Maximum value of SAR (measured) = 0.575 W/kg

Flat/Zoom Scan (5x5x7)/Cube 1:
Measurement grid: dx=8mm, dy=8mm, dz=5mm
Reference Value = 17.084 V/m; Power Drift = 0.07 dB
Peak SAR (extrapolated) = 0.619 W/kg
SAR(1 g) = 0.425 W/kg; SAR(10 g) = 0.279 W/kg
Maximum value of SAR (measured) = 0.527 W/kg

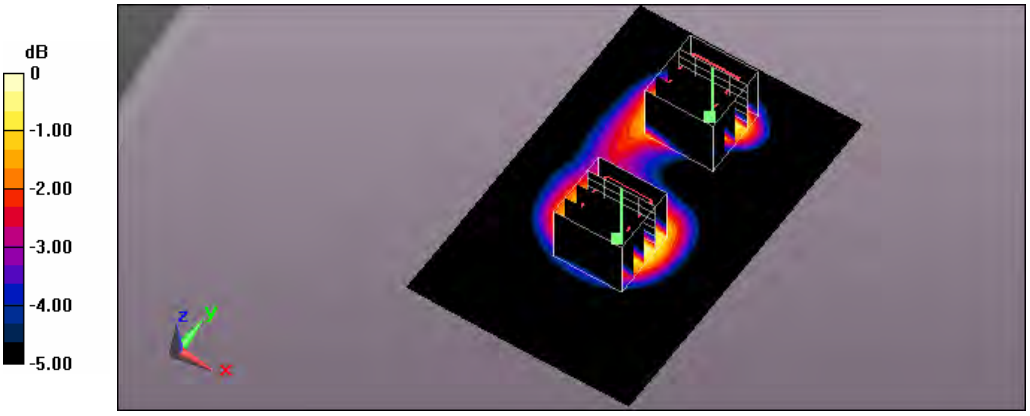

0 dB = 0.527 W/kg = -2.78 dBW/kg

Test Laboratory: A Test Lab Techno Corp.
Date: 2014/9/26Time: PM 05:58:13
25_Flat_WCDMA BandIV CH1513_side 3 surface to phantom 10mm
DUT: AC785S-500;Type: WWAN Mobile Hotspot Portable Device;Serial: 014197000002053
Communication System: UID 0, WCDMA Band IV (0);Frequency: 1752.6 MHz;Duty Cycle: 1:1
Medium parameters used: f = 1753 MHz; σ = 1.518 S/m; ε_r = 54.718; ρ = 1000 kg/m^3
Phantom section: Flat Section
Measurement Standard: DASY5 (IEEE/IEC/ANSI C63.19-2011)
DASY Configuration:

- Area Scan setting - Find Secondary Maximum Within:2.0dB and with a peak SAR value greater than 0.5 W/Kg
- Probe: EX3DV4 - SN3977;ConvF(7.69, 7.69, 7.69); Calibrated: 2014/2/17;
- Sensor-Surface: 2mm (Mechanical Surface Detection)
- Electronics: DAE4 Sn779;Calibrated: 2014/2/25
- Phantom: ELI v5.0;Type: QDOVA002AA;Serial: TP:1133
- Measurement SW: DASY52, Version 52.8 (7);SEMCAD X Version 14.6.10 (7164)

Flat/Area Scan (61x111x1):
Interpolated grid: dx=1.500 mm, dy=1.500 mm
Maximum value of SAR (interpolated) = 0.137 W/kg

Flat/Zoom Scan (5x5x7)/Cube 0:
Measurement grid: dx=8mm, dy=8mm, dz=5mm
Reference Value = 9.559 V/m; Power Drift = 0.04 dB
Peak SAR (extrapolated) = 0.162 W/kg
SAR(1 g) = 0.103 W/kg; SAR(10 g) = 0.064 W/kg
Maximum value of SAR (measured) = 0.134 W/kg

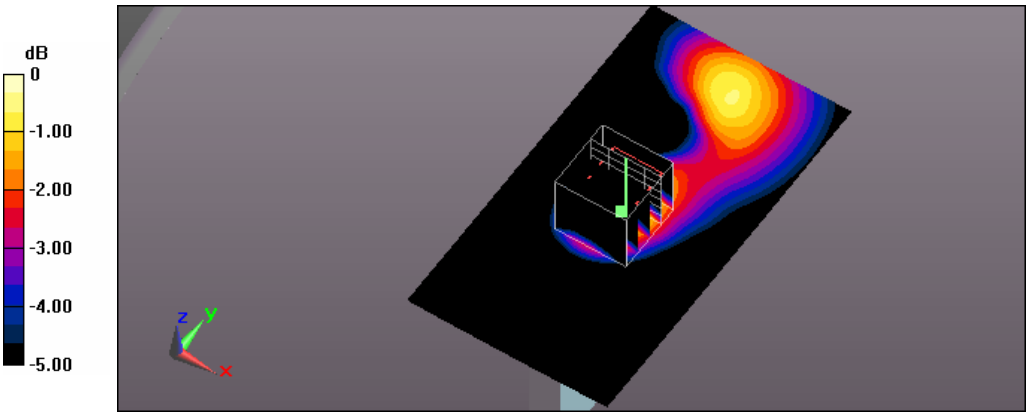

0 dB = 0.134 W/kg = -8.73 dBW/kg

Test Laboratory: A Test Lab Techno Corp.
Date: 2014/9/26Time: PM 07:48:17
26_Flat_WCDMA BandIV CH1513_side 4 surface to phantom 10mm
DUT: AC785S-500;Type: WWAN Mobile Hotspot Portable Device;Serial: 014197000002053
Communication System: UID 0, WCDMA Band IV (0);Frequency: 1752.6 MHz;Duty Cycle: 1:1
Medium parameters used: f = 1753 MHz; σ = 1.518 S/m; ε_r = 54.718; ρ = 1000 kg/m^3
Phantom section: Flat Section
Measurement Standard: DASY5 (IEEE/IEC/ANSI C63.19-2011)
DASY Configuration:

- Area Scan setting - Find Secondary Maximum Within:2.0dB and with a peak SAR value greater than 0.5 W/Kg
- Probe: EX3DV4 - SN3977;ConvF(7.69, 7.69, 7.69); Calibrated: 2014/2/17;
- Sensor-Surface: 2mm (Mechanical Surface Detection)
- Electronics: DAE4 Sn779;Calibrated: 2014/2/25
- Phantom: ELI v5.0;Type: QDOVA002AA;Serial: TP:1133
- Measurement SW: DASY52, Version 52.8 (7);SEMCAD X Version 14.6.10 (7164)

Flat/Area Scan (61x111x1):
Interpolated grid: dx=1.500 mm, dy=1.500 mm
Maximum value of SAR (interpolated) = 0.530 W/kg

Flat/Zoom Scan (5x5x7)/Cube 0:
Measurement grid: dx=8mm, dy=8mm, dz=5mm
Reference Value = 14.720 V/m; Power Drift = 0.19 dB
Peak SAR (extrapolated) = 0.656 W/kg
SAR(1 g) = 0.421 W/kg; SAR(10 g) = 0.259 W/kg
Maximum value of SAR (measured) = 0.549 W/kg

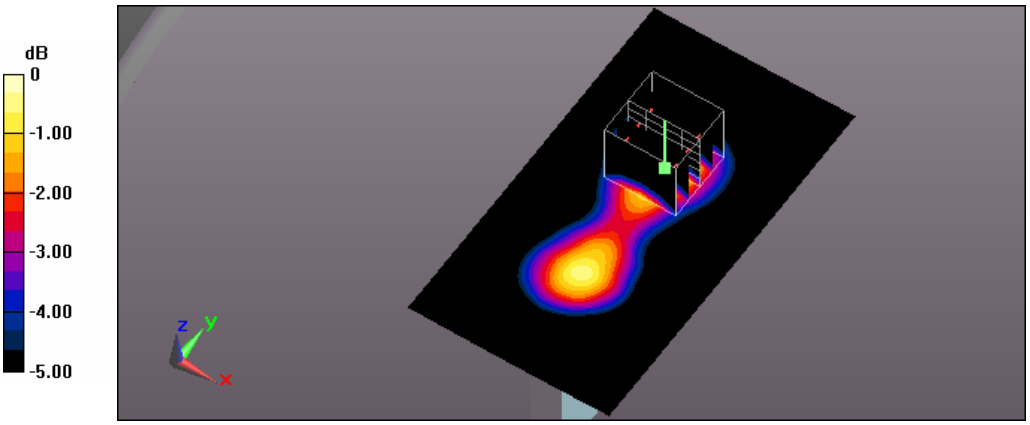

0 dB = 0.549 W/kg = -2.60 dBW/kg

Test Laboratory: A Test Lab Techno Corp.
Date: 2014/9/26Time: PM 08:18:11
27_Flat_WCDMA BandIV CH1513_side 6 surface to phantom 10mm
DUT: AC785S-500;Type: WWAN Mobile Hotspot Portable Device;Serial: 014197000002053
Communication System: UID 0, WCDMA Band IV (0);Frequency: 1752.6 MHz;Duty Cycle: 1:1
Medium parameters used: f = 1753 MHz; σ = 1.518 S/m; ε_r = 54.718; ρ = 1000 kg/m^3
Phantom section: Flat Section
Measurement Standard: DASY5 (IEEE/IEC/ANSI C63.19-2011)
DASY Configuration:

- Area Scan setting - Find Secondary Maximum Within:2.0dB and with a peak SAR value greater than 0.5 W/Kg
- Probe: EX3DV4 - SN3977;ConvF(7.69, 7.69, 7.69); Calibrated: 2014/2/17;
- Sensor-Surface: 2mm (Mechanical Surface Detection)
- Electronics: DAE4 Sn779;Calibrated: 2014/2/25
- Phantom: ELI v5.0;Type: QDOVA002AA;Serial: TP:1133
- Measurement SW: DASY52, Version 52.8 (7);SEMCAD X Version 14.6.10 (7164)

Flat/Area Scan (61x111x1):
Interpolated grid: dx=1.500 mm, dy=1.500 mm
Maximum value of SAR (interpolated) = 1.50 W/kg

Flat/Zoom Scan (5x5x7)/Cube 0:
Measurement grid: dx=8mm, dy=8mm, dz=5mm
Reference Value = 28.863 V/m; Power Drift = 0.03 dB
Peak SAR (extrapolated) = 1.78 W/kg
SAR(1 g) = 1.02 W/kg; SAR(10 g) = 0.542 W/kg
Maximum value of SAR (measured) = 1.42 W/kg

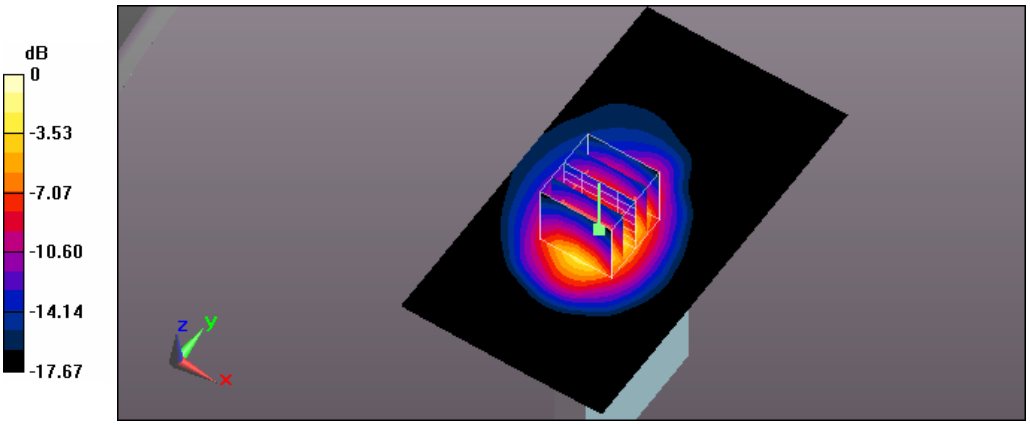

0 dB = 1.42 W/kg = 1.52 dBW/kg

Test Laboratory: A Test Lab Techno Corp.
Date: 2014/11/7Time: PM 01:30:55
6_Flat_WCDMA BandV CH4132_side 1 surface to phantom 10mm
DUT: AC785S-500;Type: WWAN Mobile Hotspot Portable Device;Serial: 014197000002053
Communication System: UID 0, WCDMA Band V (0);Frequency: 826.4 MHz;Duty Cycle: 1:1
Medium parameters used (interpolated): f = 826.4 MHz; σ = 0.98 S/m; ε_r = 55.319; ρ = 1000 kg/m^3
Phantom section: Flat Section
Measurement Standard: DASY5 (IEEE/IEC/ANSI C63.19-2011)
DASY Configuration:

- Area Scan setting - Find Secondary Maximum Within:2.0dB and with a peak SAR value greater than 0.5 W/Kg
- Probe: EX3DV4 - SN3977;ConvF(9.74, 9.74, 9.74); Calibrated: 2014/2/17;
- Sensor-Surface: 2mm (Mechanical Surface Detection)
- Electronics: DAE4 Sn779;Calibrated: 2014/2/25
- Phantom: ELI v5.0;Type: QDOVA002AA;Serial: TP:1133
- Measurement SW: DASY52, Version 52.8 (7);SEMCAD X Version 14.6.10 (7164)

Flat/Area Scan (71x111x1):
Interpolated grid: dx=1.500 mm, dy=1.500 mm
Maximum value of SAR (interpolated) = 0.665 W/kg

Flat/Zoom Scan (5x5x7)/Cube 0:
Measurement grid: dx=8mm, dy=8mm, dz=5mm
Reference Value = 20.166 V/m; Power Drift = 0.01 dB
Peak SAR (extrapolated) = 0.758 W/kg
SAR(1 g) = 0.513 W/kg; SAR(10 g) = 0.341 W/kg
Maximum value of SAR (measured) = 0.644 W/kg

Flat/Zoom Scan (5x5x7)/Cube 1:
Measurement grid: dx=8mm, dy=8mm, dz=5mm
Reference Value = 20.166 V/m; Power Drift = 0.01 dB
Peak SAR (extrapolated) = 0.837 W/kg
SAR(1 g) = 0.533 W/kg; SAR(10 g) = 0.339 W/kg
Maximum value of SAR (measured) = 0.692 W/kg

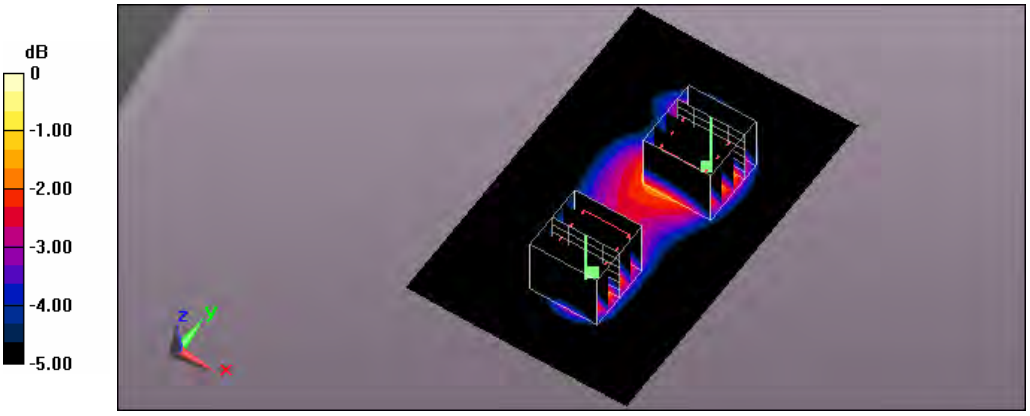

0 dB = 0.692 W/kg = -1.60 dBW/kg

Test Laboratory: A Test Lab Techno Corp.
Date: 2014/11/7Time: PM 02:24:10
7_Flat_WCDMA BandV CH4132_side 2 surface to phantom 10mm
DUT: AC785S-500;Type: WWAN Mobile Hotspot Portable Device;Serial: 014197000002053
Communication System: UID 0, WCDMA Band V (0);Frequency: 826.4 MHz;Duty Cycle: 1:1
Medium parameters used (interpolated): f = 826.4 MHz; σ = 0.98 S/m; ε_r = 55.319; ρ = 1000 kg/m^3
Phantom section: Flat Section
Measurement Standard: DASY5 (IEEE/IEC/ANSI C63.19-2011)
DASY Configuration:

- Area Scan setting - Find Secondary Maximum Within:2.0dB and with a peak SAR value greater than 0.5 W/Kg
- Probe: EX3DV4 - SN3977;ConvF(9.74, 9.74, 9.74); Calibrated: 2014/2/17;
- Sensor-Surface: 2mm (Mechanical Surface Detection)
- Electronics: DAE4 Sn779;Calibrated: 2014/2/25
- Phantom: ELI v5.0;Type: QDOVA002AA;Serial: TP:1133
- Measurement SW: DASY52, Version 52.8 (7);SEMCAD X Version 14.6.10 (7164)

Flat/Area Scan (71x111x1):
Interpolated grid: dx=1.500 mm, dy=1.500 mm
Maximum value of SAR (interpolated) = 0.493 W/kg

Flat/Zoom Scan (5x5x7)/Cube 0:
Measurement grid: dx=8mm, dy=8mm, dz=5mm
Reference Value = 20.654 V/m; Power Drift = -0.06 dB
Peak SAR (extrapolated) = 0.615 W/kg
SAR(1 g) = 0.431 W/kg; SAR(10 g) = 0.301 W/kg
Maximum value of SAR (measured) = 0.522 W/kg

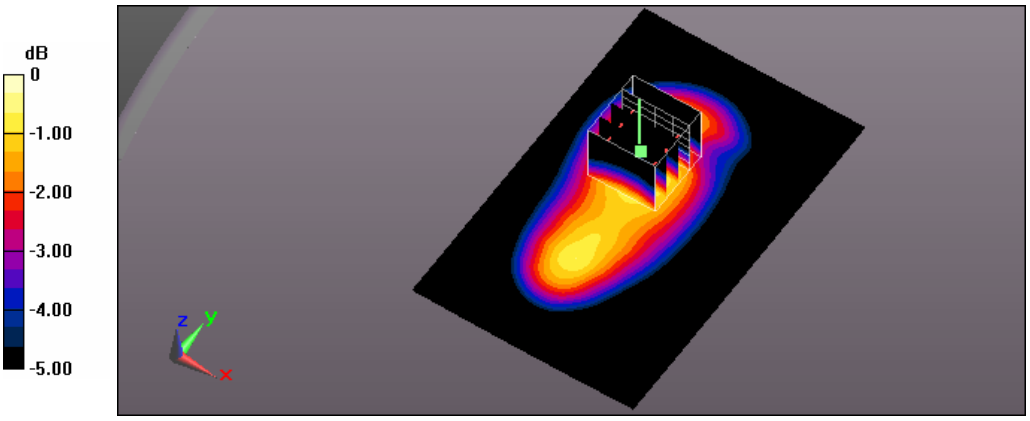

0 dB = 0.522 W/kg = -2.82 dBW/kg

Test Laboratory: A Test Lab Techno Corp.
Date: 2014/11/7Time: PM 03:06:36
8_Flat_WCDMA BandV CH4132_side 3 surface to phantom 10mm
DUT: AC785S-500;Type: WWAN Mobile Hotspot Portable Device;Serial: 014197000002053
Communication System: UID 0, WCDMA Band V (0);Frequency: 826.4 MHz;Duty Cycle: 1:1
Medium parameters used (interpolated): f = 826.4 MHz; σ = 0.98 S/m; ε_r = 55.319; ρ = 1000 kg/m^3
Phantom section: Flat Section
Measurement Standard: DASY5 (IEEE/IEC/ANSI C63.19-2011)
DASY Configuration:

- Area Scan setting - Find Secondary Maximum Within:2.0dB and with a peak SAR value greater than 0.5 W/Kg
- Probe: EX3DV4 - SN3977;ConvF(9.74, 9.74, 9.74); Calibrated: 2014/2/17;
- Sensor-Surface: 2mm (Mechanical Surface Detection)
- Electronics: DAE4 Sn779;Calibrated: 2014/2/25
- Phantom: ELI v5.0;Type: QDOVA002AA;Serial: TP:1133
- Measurement SW: DASY52, Version 52.8 (7);SEMCAD X Version 14.6.10 (7164)

Flat/Area Scan (61x111x1):
Interpolated grid: dx=1.500 mm, dy=1.500 mm
Maximum value of SAR (interpolated) = 0.214 W/kg

Flat/Zoom Scan (5x5x7)/Cube 0:
Measurement grid: dx=8mm, dy=8mm, dz=5mm
Reference Value = 14.949 V/m; Power Drift = 0.01 dB
Peak SAR (extrapolated) = 0.242 W/kg
SAR(1 g) = 0.176 W/kg; SAR(10 g) = 0.126 W/kg
Maximum value of SAR (measured) = 0.213 W/kg

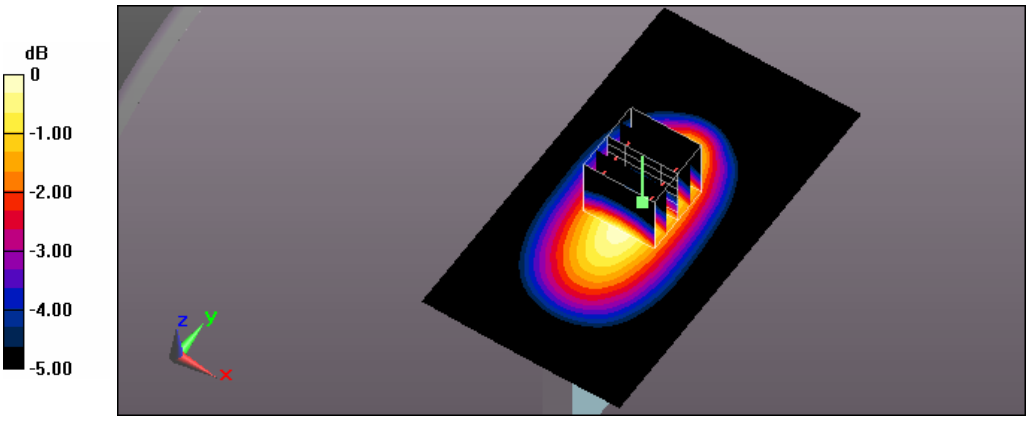

0 dB = 0.213 W/kg = -6.72 dBW/kg

Test Laboratory: A Test Lab Techno Corp.
Date: 2014/11/7Time: PM 03:26:34
9_Flat_WCDMA BandV CH4132_side 4 surface to phantom 10mm
DUT: AC785S-500;Type: WWAN Mobile Hotspot Portable Device;Serial: 014197000002053
Communication System: UID 0, WCDMA Band V (0);Frequency: 826.4 MHz;Duty Cycle: 1:1
Medium parameters used (interpolated): f = 826.4 MHz; σ = 0.98 S/m; ε_r = 55.319; ρ = 1000 kg/m^3
Phantom section: Flat Section
Measurement Standard: DASY5 (IEEE/IEC/ANSI C63.19-2011)
DASY Configuration:

- Area Scan setting - Find Secondary Maximum Within:2.0dB and with a peak SAR value greater than 0.5 W/Kg
- Probe: EX3DV4 - SN3977;ConvF(9.74, 9.74, 9.74); Calibrated: 2014/2/17;
- Sensor-Surface: 2mm (Mechanical Surface Detection)
- Electronics: DAE4 Sn779;Calibrated: 2014/2/25
- Phantom: ELI v5.0;Type: QDOVA002AA;Serial: TP:1133
- Measurement SW: DASY52, Version 52.8 (7);SEMCAD X Version 14.6.10 (7164)

Flat/Area Scan (61x111x1):
Interpolated grid: dx=1.500 mm, dy=1.500 mm
Maximum value of SAR (interpolated) = 0.405 W/kg

Flat/Zoom Scan (5x5x7)/Cube 0:
Measurement grid: dx=8mm, dy=8mm, dz=5mm
Reference Value = 14.864 V/m; Power Drift = 0.03 dB
Peak SAR (extrapolated) = 0.289 W/kg
SAR(1 g) = 0.182 W/kg; SAR(10 g) = 0.107 W/kg
Maximum value of SAR (measured) = 0.267 W/kg

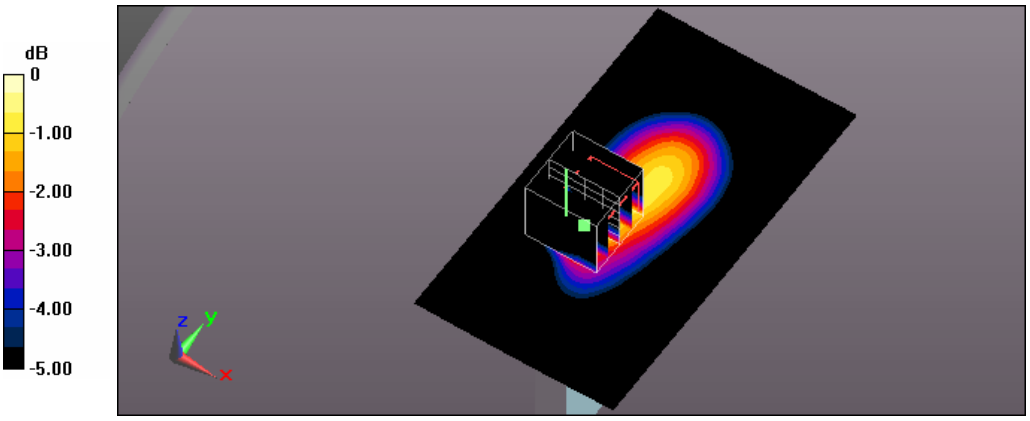

0 dB = 0.267 W/kg = -5.73 dBW/kg

Test Laboratory: A Test Lab Techno Corp.
Date: 2014/11/7Time: PM 04:08:03
10_Flat_WCDMA BandV CH4132_side 6 surface to phantom 10mm
DUT: AC785S-500;Type: WWAN Mobile Hotspot Portable Device;Serial: 014197000002053
Communication System: UID 0, WCDMA Band V (0);Frequency: 826.4 MHz;Duty Cycle: 1:1
Medium parameters used (interpolated): f = 826.4 MHz; σ = 0.98 S/m; ε_r = 55.319; ρ = 1000 kg/m^3
Phantom section: Flat Section
Measurement Standard: DASY5 (IEEE/IEC/ANSI C63.19-2011)
DASY Configuration:

- Area Scan setting - Find Secondary Maximum Within:2.0dB and with a peak SAR value greater than 0.5 W/Kg
- Probe: EX3DV4 - SN3977;ConvF(9.74, 9.74, 9.74); Calibrated: 2014/2/17;
- Sensor-Surface: 2mm (Mechanical Surface Detection)
- Electronics: DAE4 Sn779;Calibrated: 2014/2/25
- Phantom: ELI v5.0;Type: QDOVA002AA;Serial: TP:1133
- Measurement SW: DASY52, Version 52.8 (7);SEMCAD X Version 14.6.10 (7164)

Flat/Area Scan (61x111x1):
Interpolated grid: dx=1.500 mm, dy=1.500 mm
Maximum value of SAR (interpolated) = 0.199 W/kg

Flat/Zoom Scan (5x5x7)/Cube 0:
Measurement grid: dx=8mm, dy=8mm, dz=5mm
Reference Value = 14.528 V/m; Power Drift = -0.13 dB
Peak SAR (extrapolated) = 0.250 W/kg
SAR(1 g) = 0.142 W/kg; SAR(10 g) = 0.079 W/kg
Maximum value of SAR (measured) = 0.200 W/kg

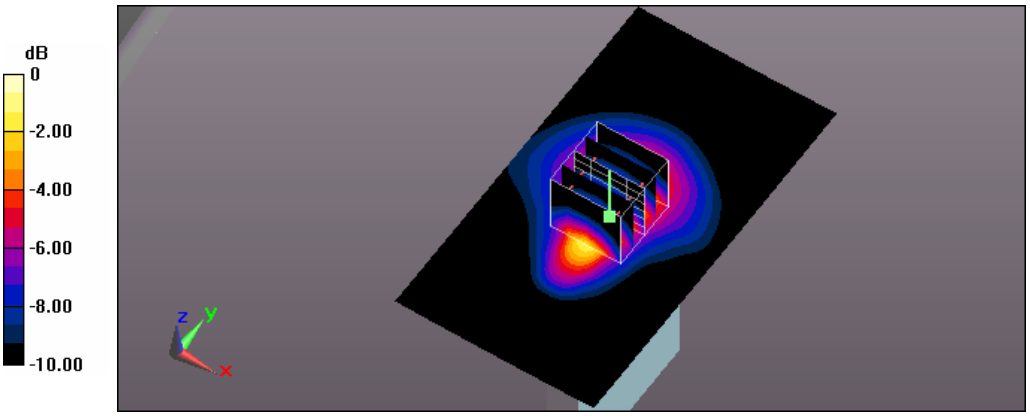

0 dB = 0.200 W/kg = -6.99 dBW/kg

Test Laboratory: A Test Lab Techno Corp.
Date: 2014/11/12Time: PM 11:14:17
30_Flat_WCDMA BandII CH9538__original 16_ side 1 surface to phantom 10mm_measurement onece
DUT: AC785S-500;Type: WWAN Mobile Hotspot Portable Device;Serial: 014197000002053
Communication System: UID 0, WCDMA Band II (0);Frequency: 1907.6 MHz;Duty Cycle: 1:1
Medium parameters used: f = 1908 MHz; σ = 1.491 S/m; ε_r = 52.317; ρ = 1000 kg/m^3
Phantom section: Flat Section
Measurement Standard: DASY5 (IEEE/IEC/ANSI C63.19-2011)
DASY Configuration:

- Area Scan setting - Find Secondary Maximum Within:2.0dB and with a peak SAR value greater than 0.5 W/Kg
- Probe: EX3DV4 - SN3977;ConvF(7.37, 7.37, 7.37); Calibrated: 2014/2/17;
- Sensor-Surface: 2mm (Mechanical Surface Detection)
- Electronics: DAE4 Sn779;Calibrated: 2014/2/25
- Phantom: ELI v5.0;Type: QDOVA002AA;Serial: TP:1133
- Measurement SW: DASY52, Version 52.8 (7);SEMCAD X Version 14.6.10 (7164)

Flat/Area Scan (71x111x1):
Interpolated grid: dx=1.500 mm, dy=1.500 mm
Maximum value of SAR (interpolated) = 1.51 W/kg

Flat/Zoom Scan (5x5x7)/Cube 0:
Measurement grid: dx=8mm, dy=8mm, dz=5mm
Reference Value = 13.819 V/m; Power Drift = -0.02 dB
Peak SAR (extrapolated) = 1.68 W/kg
SAR(1 g) = 0.957 W/kg; SAR(10 g) = 0.530 W/kg
Maximum value of SAR (measured) = 1.31 W/kg

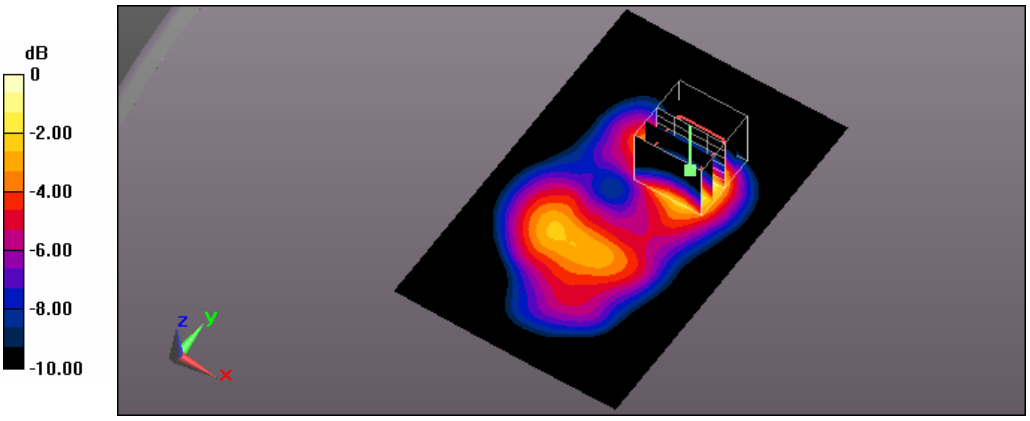

0 dB = 1.31 W/kg = 1.17 dBW/kg

Test Laboratory: A Test Lab Techno Corp.
Date: 2014/9/27Time: AM 06:35:39
31_Flat_WCDMA BandIV CH1312_original 28_side 6 surface to phantom 10mm_measurement onece
DUT: AC785S-500;Type: WWAN Mobile Hotspot Portable Device;Serial: 014197000002053
Communication System: UID 0, WCDMA Band IV (0);Frequency: 1712.4 MHz;Duty Cycle: 1:1
Medium parameters used (interpolated): f = 1712.4 MHz; σ = 1.486 S/m; ε_r = 54.527; ρ = 1000 kg/m^3
Phantom section: Flat Section
Measurement Standard: DASY5 (IEEE/IEC/ANSI C63.19-2011)
DASY Configuration:

- Area Scan setting - Find Secondary Maximum Within:2.0dB and with a peak SAR value greater than 0.5 W/Kg
- Probe: EX3DV4 - SN3977;ConvF(7.69, 7.69, 7.69); Calibrated: 2014/2/17;
- Sensor-Surface: 2mm (Mechanical Surface Detection)
- Electronics: DAE4 Sn779;Calibrated: 2014/2/25
- Phantom: ELI v5.0;Type: QDOVA002AA;Serial: TP:1133
- Measurement SW: DASY52, Version 52.8 (7);SEMCAD X Version 14.6.10 (7164)

Flat/Area Scan (61x111x1):
Interpolated grid: dx=1.500 mm, dy=1.500 mm
Maximum value of SAR (interpolated) = 1.51 W/kg

Flat/Zoom Scan (5x5x7)/Cube 0:
Measurement grid: dx=8mm, dy=8mm, dz=5mm
Reference Value = 26.549 V/m; Power Drift = 0.17 dB
Peak SAR (extrapolated) = 1.83 W/kg
SAR(1 g) = 1.07 W/kg; SAR(10 g) = 0.564 W/kg
Maximum value of SAR (measured) = 1.48 W/kg

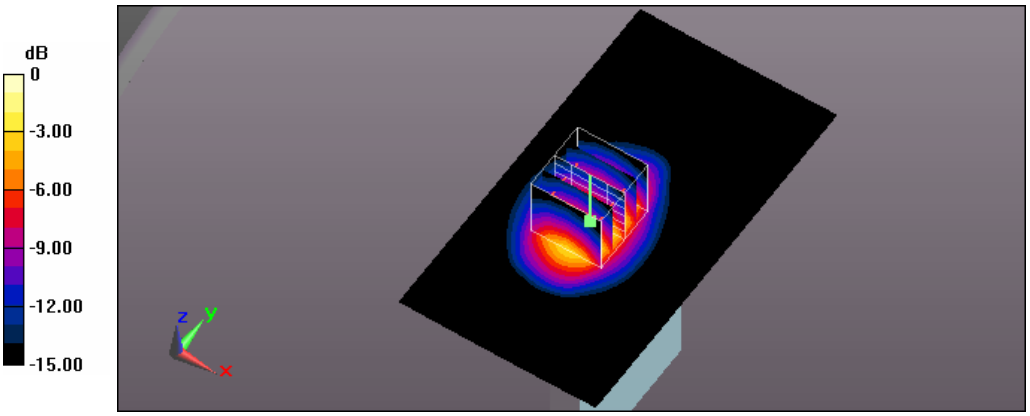

0 dB = 1.48 W/kg = 1.70 dBW/kg

Test Laboratory: A Test Lab Techno Corp.
Date: 2014/9/27Time: AM 10:52:36
33_Flat_LTE Band2 BW 20M CH18700_QPSK with 1 RB Size 0 RB Offset side 1 surface to phantom 10mm
DUT: AC785S-500;Type: WWAN Mobile Hotspot Portable Device;Serial: 014197000002053
Communication System: UID 0, Generic LTE (0);Frequency: 1860 MHz;Duty Cycle: 1:1
Medium parameters used: f = 1860 MHz; σ = 1.461 S/m; ε_r = 52.504; ρ = 1000 kg/m^3
Phantom section: Flat Section
Measurement Standard: DASY5 (IEEE/IEC/ANSI C63.19-2011)
DASY Configuration:

- Area Scan setting - Find Secondary Maximum Within:2.0dB and with a peak SAR value greater than 0.5 W/Kg
- Probe: EX3DV4 - SN3977;ConvF(7.37, 7.37, 7.37); Calibrated: 2014/2/17;
- Sensor-Surface: 2mm (Mechanical Surface Detection)
- Electronics: DAE4 Sn779;Calibrated: 2014/2/25
- Phantom: ELI v5.0;Type: QDOVA002AA;Serial: TP:1133
- Measurement SW: DASY52, Version 52.8 (7);SEMCAD X Version 14.6.10 (7164)

Flat/Area Scan (71x111x1):
Interpolated grid: dx=1.500 mm, dy=1.500 mm
Maximum value of SAR (interpolated) = 1.45 W/kg

Flat/Zoom Scan (5x5x7)/Cube 0:
Measurement grid: dx=8mm, dy=8mm, dz=5mm
Reference Value = 17.369 V/m; Power Drift = -0.05 dB
Peak SAR (extrapolated) = 1.56 W/kg
SAR(1 g) = 0.897 W/kg; SAR(10 g) = 0.491 W/kg
Maximum value of SAR (measured) = 1.23 W/kg

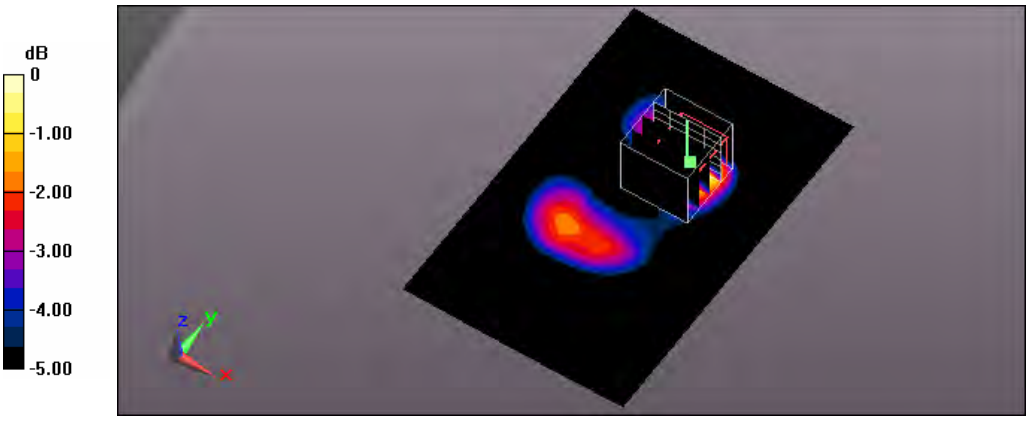

0 dB = 1.23 W/kg = 0.90 dBW/kg

Test Laboratory: A Test Lab Techno Corp.
Date: 2014/9/27Time: AM 11:12:08
34_Flat_LTE Band2 BW 20M CH18900_QPSK with 1 RB Size 0 RB Offset side 1 surface to phantom 10mm
DUT: AC785S-500;Type: WWAN Mobile Hotspot Portable Device;Serial: 014197000002053
Communication System: UID 0, Generic LTE (0);Frequency: 1880 MHz;Duty Cycle: 1:1
Medium parameters used: f = 1880 MHz; σ = 1.458 S/m; ε_r = 52.636; ρ = 1000 kg/m^3
Phantom section: Flat Section
Measurement Standard: DASY5 (IEEE/IEC/ANSI C63.19-2011)
DASY Configuration:

- Area Scan setting - Find Secondary Maximum Within:2.0dB and with a peak SAR value greater than 0.5 W/Kg
- Probe: EX3DV4 - SN3977;ConvF(7.37, 7.37, 7.37); Calibrated: 2014/2/17;
- Sensor-Surface: 2mm (Mechanical Surface Detection)
- Electronics: DAE4 Sn779;Calibrated: 2014/2/25
- Phantom: ELI v5.0;Type: QDOVA002AA;Serial: TP:1133
- Measurement SW: DASY52, Version 52.8 (7);SEMCAD X Version 14.6.10 (7164)

Flat/Area Scan (71x111x1):
Interpolated grid: dx=1.500 mm, dy=1.500 mm
Maximum value of SAR (interpolated) = 1.47 W/kg

Flat/Zoom Scan (5x5x7)/Cube 0:
Measurement grid: dx=8mm, dy=8mm, dz=5mm
Reference Value = 16.841 V/m; Power Drift = -0.02 dB
Peak SAR (extrapolated) = 1.67 W/kg
SAR(1 g) = 0.961 W/kg; SAR(10 g) = 0.525 W/kg
Maximum value of SAR (measured) = 1.31 W/kg

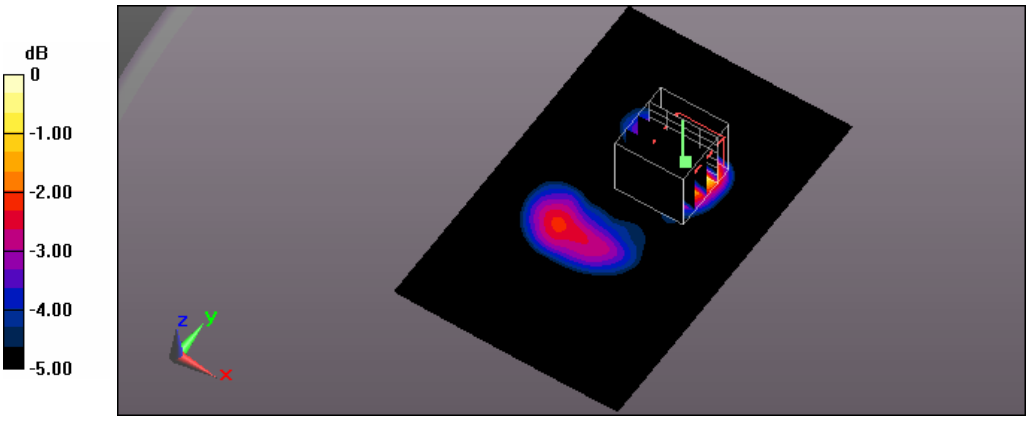

0 dB = 1.31 W/kg = 1.17 dBW/kg

Test Laboratory: A Test Lab Techno Corp.
Date: 2014/9/27Time: AM 10:29:56
32_Flat_LTE Band2 BW 20M CH19100_QPSK with 1 RB Size 0 RB Offset side 1 surface to phantom 10mm
DUT: AC785S-500;Type: WWAN Mobile Hotspot Portable Device;Serial: 014197000002053
Communication System: UID 0, Generic LTE (0);Frequency: 1900 MHz;Duty Cycle: 1:1
Medium parameters used: f = 1900 MHz; σ = 1.475 S/m; ε_r = 52.463; ρ = 1000 kg/m^3
Phantom section: Flat Section
Measurement Standard: DASY5 (IEEE/IEC/ANSI C63.19-2011)
DASY Configuration:

- Area Scan setting - Find Secondary Maximum Within:2.0dB and with a peak SAR value greater than 0.5 W/Kg
- Probe: EX3DV4 - SN3977;ConvF(7.37, 7.37, 7.37); Calibrated: 2014/2/17;
- Sensor-Surface: 2mm (Mechanical Surface Detection)
- Electronics: DAE4 Sn779;Calibrated: 2014/2/25
- Phantom: ELI v5.0;Type: QDOVA002AA;Serial: TP:1133
- Measurement SW: DASY52, Version 52.8 (7);SEMCAD X Version 14.6.10 (7164)

Flat/Area Scan (71x111x1):
Interpolated grid: dx=1.500 mm, dy=1.500 mm
Maximum value of SAR (interpolated) = 1.64 W/kg

Flat/Zoom Scan (5x5x7)/Cube 0:
Measurement grid: dx=8mm, dy=8mm, dz=5mm
Reference Value = 17.274 V/m; Power Drift = -0.02 dB
Peak SAR (extrapolated) = 1.87 W/kg
SAR(1 g) = 1.08 W/kg; SAR(10 g) = 0.586 W/kg
Maximum value of SAR (measured) = 1.48 W/kg

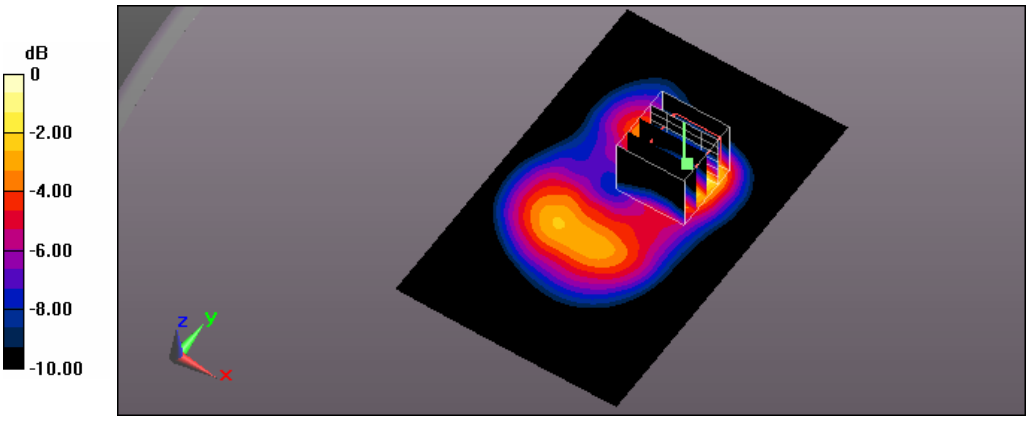

0 dB = 1.48 W/kg = 1.70 dBW/kg

Test Laboratory: A Test Lab Techno Corp.
Date: 2014/9/27Time: AM 11:57:39
36_Flat_LTE Band2 BW 20M CH19100_QPSK with 1 RB Size 0 RB Offset side 2 surface to phantom 10mm
DUT: AC785S-500;Type: WWAN Mobile Hotspot Portable Device;Serial: 014197000002053
Communication System: UID 0, Generic LTE (0);Frequency: 1900 MHz;Duty Cycle: 1:1
Medium parameters used: f = 1900 MHz; σ = 1.475 S/m; ε_r = 52.463; ρ = 1000 kg/m^3
Phantom section: Flat Section
Measurement Standard: DASY5 (IEEE/IEC/ANSI C63.19-2011)
DASY Configuration:

- Area Scan setting - Find Secondary Maximum Within:2.0dB and with a peak SAR value greater than 0.5 W/Kg
- Probe: EX3DV4 - SN3977;ConvF(7.37, 7.37, 7.37); Calibrated: 2014/2/17;
- Sensor-Surface: 2mm (Mechanical Surface Detection)
- Electronics: DAE4 Sn779;Calibrated: 2014/2/25
- Phantom: ELI v5.0;Type: QDOVA002AA;Serial: TP:1133
- Measurement SW: DASY52, Version 52.8 (7);SEMCAD X Version 14.6.10 (7164)

Flat/Area Scan (71x111x1):
Interpolated grid: dx=1.500 mm, dy=1.500 mm
Maximum value of SAR (interpolated) = 0.580 W/kg

Flat/Zoom Scan (5x5x7)/Cube 0:
Measurement grid: dx=8mm, dy=8mm, dz=5mm
Reference Value = 15.016 V/m; Power Drift = -0.15 dB
Peak SAR (extrapolated) = 0.713 W/kg
SAR(1 g) = 0.437 W/kg; SAR(10 g) = 0.248 W/kg
Maximum value of SAR (measured) = 0.578 W/kg

Flat/Zoom Scan (5x5x7)/Cube 1:
Measurement grid: dx=8mm, dy=8mm, dz=5mm
Reference Value = 15.016 V/m; Power Drift = -0.15 dB
Peak SAR (extrapolated) = 0.642 W/kg
SAR(1 g) = 0.421 W/kg; SAR(10 g) = 0.258 W/kg
Maximum value of SAR (measured) = 0.533 W/kg

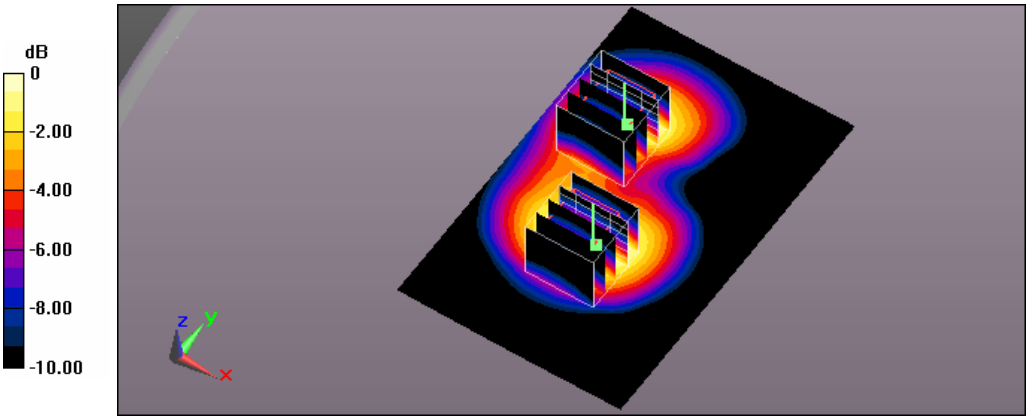

0 dB = 0.533 W/kg = -2.73 dBW/kg

Test Laboratory: A Test Lab Techno Corp.
Date: 2014/9/27Time: PM 10:05:38
38_Flat_LTE Band2 BW 20M CH19100_QPSK with 1 RB Size 0 RB Offset side 3 surface to phantom 10mm
DUT: AC785S-500;Type: WWAN Mobile Hotspot Portable Device;Serial: 014197000002053
Communication System: UID 0, Generic LTE (0);Frequency: 1900 MHz;Duty Cycle: 1:1
Medium parameters used: f = 1900 MHz; σ = 1.475 S/m; ε_r = 52.463; ρ = 1000 kg/m^3
Phantom section: Flat Section
Measurement Standard: DASY5 (IEEE/IEC/ANSI C63.19-2011)
DASY Configuration:

- Area Scan setting - Find Secondary Maximum Within:2.0dB and with a peak SAR value greater than 0.5 W/Kg
- Probe: EX3DV4 - SN3977;ConvF(7.37, 7.37, 7.37); Calibrated: 2014/2/17;
- Sensor-Surface: 2mm (Mechanical Surface Detection)
- Electronics: DAE4 Sn779;Calibrated: 2014/2/25
- Phantom: ELI v5.0;Type: QDOVA002AA;Serial: TP:1133
- Measurement SW: DASY52, Version 52.8 (7);SEMCAD X Version 14.6.10 (7164)

Flat/Area Scan (61x111x1):
Interpolated grid: dx=1.500 mm, dy=1.500 mm
Maximum value of SAR (interpolated) = 0.157 W/kg

Flat/Zoom Scan (5x5x7)/Cube 0:
Measurement grid: dx=8mm, dy=8mm, dz=5mm
Reference Value = 9.634 V/m; Power Drift = -0.09 dB
Peak SAR (extrapolated) = 0.183 W/kg
SAR(1 g) = 0.115 W/kg; SAR(10 g) = 0.068 W/kg
Maximum value of SAR (measured) = 0.151 W/kg

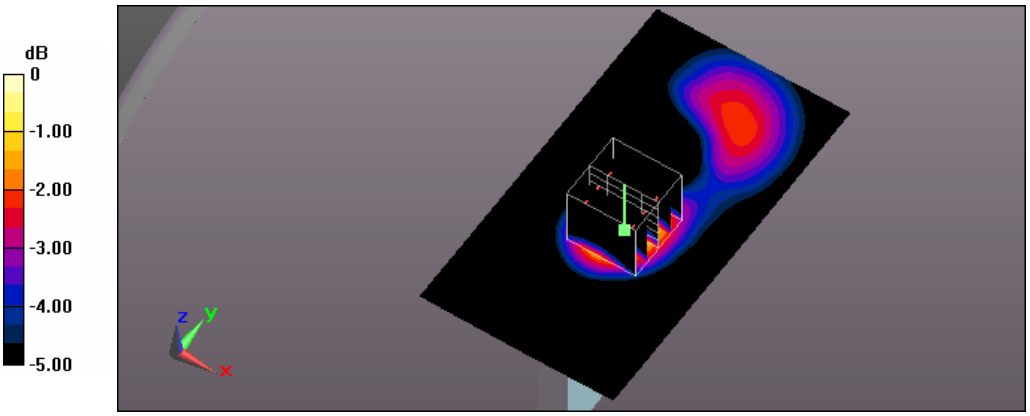

0 dB = 0.151 W/kg = -8.21 dBW/kg

Test Laboratory: A Test Lab Techno Corp.
Date: 2014/9/27Time: PM 01:10:40
40_Flat_LTE Band2 BW 20M CH19100_QPSK with 1 RB Size 0 RB Offset side 4 surface to phantom 10mm
DUT: AC785S-500;Type: WWAN Mobile Hotspot Portable Device;Serial: 014197000002053
Communication System: UID 0, Generic LTE (0);Frequency: 1900 MHz;Duty Cycle: 1:1
Medium parameters used: f = 1900 MHz; σ = 1.475 S/m; ε_r = 52.463; ρ = 1000 kg/m^3
Phantom section: Flat Section
Measurement Standard: DASY5 (IEEE/IEC/ANSI C63.19-2011)
DASY Configuration:

- Area Scan setting - Find Secondary Maximum Within:2.0dB and with a peak SAR value greater than 0.5 W/Kg
- Probe: EX3DV4 - SN3977;ConvF(7.37, 7.37, 7.37); Calibrated: 2014/2/17;
- Sensor-Surface: 2mm (Mechanical Surface Detection)
- Electronics: DAE4 Sn779;Calibrated: 2014/2/25
- Phantom: ELI v5.0;Type: QDOVA002AA;Serial: TP:1133
- Measurement SW: DASY52, Version 52.8 (7);SEMCAD X Version 14.6.10 (7164)

Flat/Area Scan (61x111x1):
Interpolated grid: dx=1.500 mm, dy=1.500 mm
Maximum value of SAR (interpolated) = 0.466 W/kg

Flat/Zoom Scan (5x5x7)/Cube 0:
Measurement grid: dx=8mm, dy=8mm, dz=5mm
Reference Value = 13.280 V/m; Power Drift = 0.19 dB
Peak SAR (extrapolated) = 0.578 W/kg
SAR(1 g) = 0.359 W/kg; SAR(10 g) = 0.215 W/kg
Maximum value of SAR (measured) = 0.475 W/kg

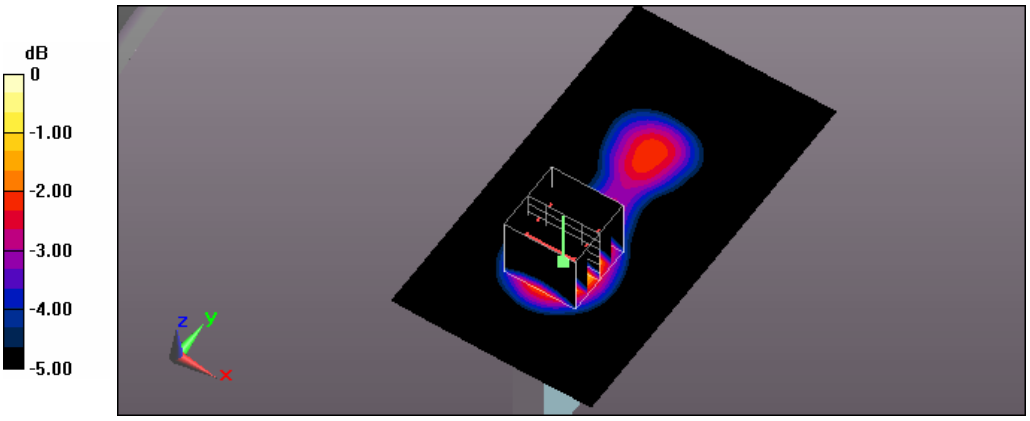

0 dB = 0.475 W/kg = -3.23 dBW/kg

Test Laboratory: A Test Lab Techno Corp.
Date: 2014/9/27Time: AM 08:23:34
42_Flat_LTE Band2 BW 20M CH19100_QPSK with 1 RB Size 0 RB Offset side 6 surface to phantom 10mm
DUT: AC785S-500;Type: WWAN Mobile Hotspot Portable Device;Serial: 014197000002053
Communication System: UID 0, Generic LTE (0);Frequency: 1900 MHz;Duty Cycle: 1:1
Medium parameters used: f = 1900 MHz; σ = 1.475 S/m; ε_r = 52.463; ρ = 1000 kg/m^3
Phantom section: Flat Section
Measurement Standard: DASY5 (IEEE/IEC/ANSI C63.19-2011)
DASY Configuration:

- Area Scan setting - Find Secondary Maximum Within:2.0dB and with a peak SAR value greater than 0.5 W/Kg
- Probe: EX3DV4 - SN3977;ConvF(7.37, 7.37, 7.37); Calibrated: 2014/2/17;
- Sensor-Surface: 2mm (Mechanical Surface Detection)
- Electronics: DAE4 Sn779;Calibrated: 2014/2/25
- Phantom: ELI v5.0;Type: QDOVA002AA;Serial: TP:1133
- Measurement SW: DASY52, Version 52.8 (7);SEMCAD X Version 14.6.10 (7164)

Flat/Area Scan (61x111x1):
Interpolated grid: dx=1.500 mm, dy=1.500 mm
Maximum value of SAR (interpolated) = 0.526 W/kg

Flat/Zoom Scan (5x5x7)/Cube 0:
Measurement grid: dx=8mm, dy=8mm, dz=5mm
Reference Value = 16.662 V/m; Power Drift = 0.03 dB
Peak SAR (extrapolated) = 0.685 W/kg
SAR(1 g) = 0.390 W/kg; SAR(10 g) = 0.214 W/kg
Maximum value of SAR (measured) = 0.547 W/kg

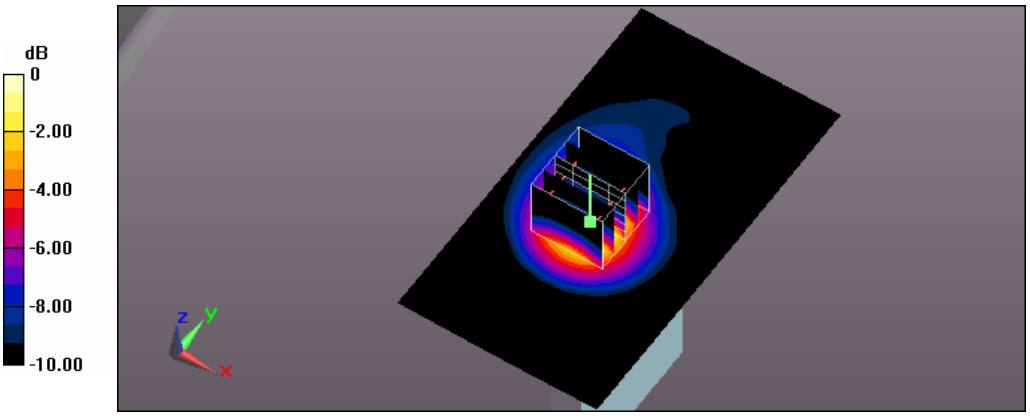

0 dB = 0.547 W/kg = -2.62 dBW/kg

Test Laboratory: A Test Lab Techno Corp.
Date: 2014/9/27Time: PM 12:48:43
35_Flat_LTE Band2 BW 20M CH19100_QPSK with 50 RB Size 0 RB Offset side 1 surface to phantom 10mm
DUT: AC785S-500;Type: WWAN Mobile Hotspot Portable Device;Serial: 014197000002053
Communication System: UID 0, Generic LTE (0);Frequency: 1900 MHz;Duty Cycle: 1:1
Medium parameters used: f = 1900 MHz; σ = 1.475 S/m; ε_r = 52.463; ρ = 1000 kg/m^3
Phantom section: Flat Section
Measurement Standard: DASY5 (IEEE/IEC/ANSI C63.19-2011)
DASY Configuration:

- Area Scan setting - Find Secondary Maximum Within:2.0dB and with a peak SAR value greater than 0.5 W/Kg
- Probe: EX3DV4 - SN3977;ConvF(7.37, 7.37, 7.37); Calibrated: 2014/2/17;
- Sensor-Surface: 2mm (Mechanical Surface Detection)
- Electronics: DAE4 Sn779;Calibrated: 2014/2/25
- Phantom: ELI v5.0;Type: QDOVA002AA;Serial: TP:1133
- Measurement SW: DASY52, Version 52.8 (7);SEMCAD X Version 14.6.10 (7164)

Flat/Area Scan (71x111x1):
Interpolated grid: dx=1.500 mm, dy=1.500 mm
Maximum value of SAR (interpolated) = 1.06 W/kg

Flat/Zoom Scan (5x5x7)/Cube 0:
Measurement grid: dx=8mm, dy=8mm, dz=5mm
Reference Value = 13.643 V/m; Power Drift = -0.03 dB
Peak SAR (extrapolated) = 1.18 W/kg
SAR(1 g) = 0.695 W/kg; SAR(10 g) = 0.382 W/kg
Maximum value of SAR (measured) = 0.933 W/kg

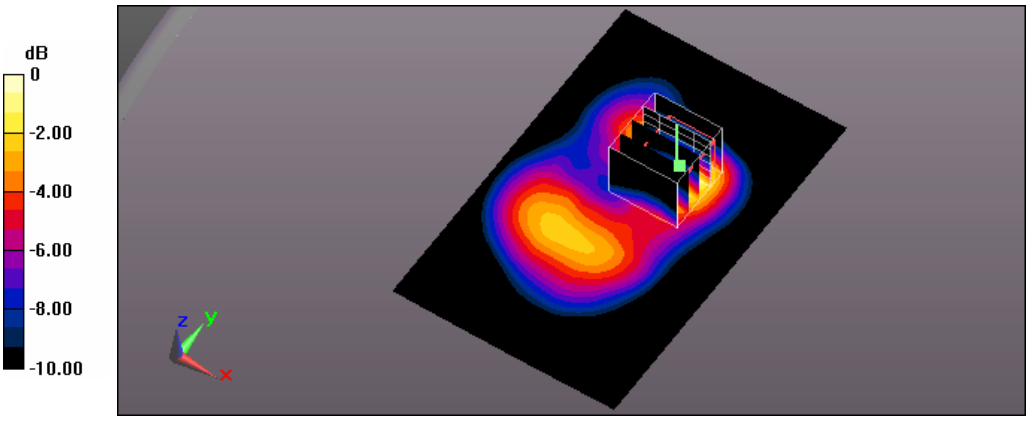

0 dB = 0.933 W/kg = -0.30 dBW/kg

Test Laboratory: A Test Lab Techno Corp.
Date: 2014/9/27Time: PM 12:25:42
37_Flat_LTE Band2 BW 20M CH19100_QPSK with 50 RB Size 0 RB Offset side 2 surface to phantom 10mm
DUT: AC785S-500;Type: WWAN Mobile Hotspot Portable Device;Serial: 014197000002053
Communication System: UID 0, Generic LTE (0);Frequency: 1900 MHz;Duty Cycle: 1:1
Medium parameters used: f = 1900 MHz; σ = 1.475 S/m; ε_r = 52.463; ρ = 1000 kg/m^3
Phantom section: Flat Section
Measurement Standard: DASY5 (IEEE/IEC/ANSI C63.19-2011)
DASY Configuration:

- Area Scan setting - Find Secondary Maximum Within:2.0dB and with a peak SAR value greater than 0.5 W/Kg
- Probe: EX3DV4 - SN3977;ConvF(7.37, 7.37, 7.37); Calibrated: 2014/2/17;
- Sensor-Surface: 2mm (Mechanical Surface Detection)
- Electronics: DAE4 Sn779;Calibrated: 2014/2/25
- Phantom: ELI v5.0;Type: QDOVA002AA;Serial: TP:1133
- Measurement SW: DASY52, Version 52.8 (7);SEMCAD X Version 14.6.10 (7164)

Flat/Area Scan (71x111x1):
Interpolated grid: dx=1.500 mm, dy=1.500 mm
Maximum value of SAR (interpolated) = 0.449 W/kg

Flat/Zoom Scan (5x5x7)/Cube 0:
Measurement grid: dx=8mm, dy=8mm, dz=5mm
Reference Value = 13.166 V/m; Power Drift = -0.17 dB
Peak SAR (extrapolated) = 0.553 W/kg
SAR(1 g) = 0.336 W/kg; SAR(10 g) = 0.191 W/kg
Maximum value of SAR (measured) = 0.450 W/kg

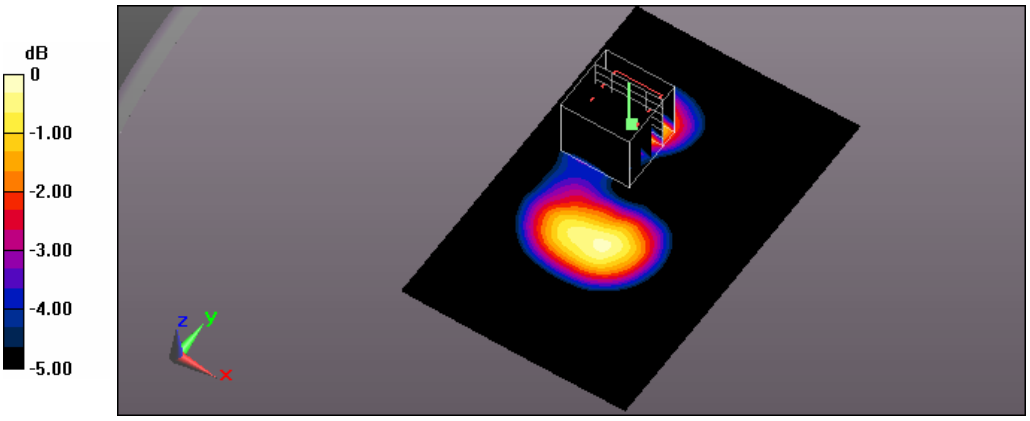

0 dB = 0.450 W/kg = -3.47 dBW/kg

Test Laboratory: A Test Lab Techno Corp.
Date: 2014/9/27Time: PM 10:37:28
39_Flat_LTE Band2 BW 20M CH19100_QPSK with 50 RB Size 0 RB Offset side 3 surface to phantom 10mm
DUT: AC785S-500;Type: WWAN Mobile Hotspot Portable Device;Serial: 014197000002053
Communication System: UID 0, Generic LTE (0);Frequency: 1900 MHz;Duty Cycle: 1:1
Medium parameters used: f = 1900 MHz; σ = 1.475 S/m; ε_r = 52.463; ρ = 1000 kg/m^3
Phantom section: Flat Section
Measurement Standard: DASY5 (IEEE/IEC/ANSI C63.19-2011)
DASY Configuration:

- Area Scan setting - Find Secondary Maximum Within:2.0dB and with a peak SAR value greater than 0.5 W/Kg
- Probe: EX3DV4 - SN3977;ConvF(7.37, 7.37, 7.37); Calibrated: 2014/2/17;
- Sensor-Surface: 2mm (Mechanical Surface Detection)
- Electronics: DAE4 Sn779;Calibrated: 2014/2/25
- Phantom: ELI v5.0;Type: QDOVA002AA;Serial: TP:1133
- Measurement SW: DASY52, Version 52.8 (7);SEMCAD X Version 14.6.10 (7164)

Flat/Area Scan (61x111x1):
Interpolated grid: dx=1.500 mm, dy=1.500 mm
Maximum value of SAR (interpolated) = 0.122 W/kg

Flat/Zoom Scan (5x5x7)/Cube 0:
Measurement grid: dx=8mm, dy=8mm, dz=5mm
Reference Value = 8.471 V/m; Power Drift = -0.05 dB
Peak SAR (extrapolated) = 0.146 W/kg
SAR(1 g) = 0.091 W/kg; SAR(10 g) = 0.054 W/kg
Maximum value of SAR (measured) = 0.120 W/kg

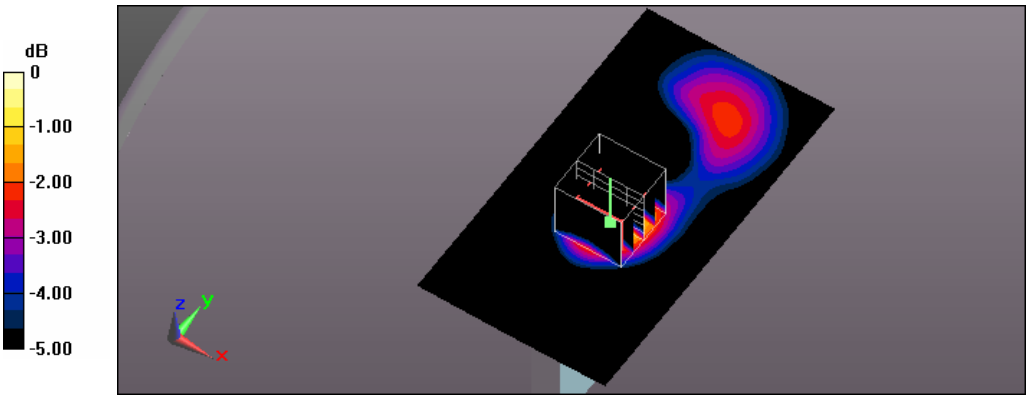

0 dB = 0.120 W/kg = -9.21 dBW/kg

Test Laboratory: A Test Lab Techno Corp.
Date: 2014/9/27Time: PM 01:28:38
41_Flat_LTE Band2 BW 20M CH19100_QPSK with 50 RB Size 0 RB Offset side 4 surface to phantom 10mm
DUT: AC785S-500;Type: WWAN Mobile Hotspot Portable Device;Serial: 014197000002053
Communication System: UID 0, Generic LTE (0);Frequency: 1900 MHz;Duty Cycle: 1:1
Medium parameters used: f = 1900 MHz; σ = 1.475 S/m; ε_r = 52.463; ρ = 1000 kg/m^3
Phantom section: Flat Section
Measurement Standard: DASY5 (IEEE/IEC/ANSI C63.19-2011)
DASY Configuration:

- Area Scan setting - Find Secondary Maximum Within:2.0dB and with a peak SAR value greater than 0.5 W/Kg
- Probe: EX3DV4 - SN3977;ConvF(7.37, 7.37, 7.37); Calibrated: 2014/2/17;
- Sensor-Surface: 2mm (Mechanical Surface Detection)
- Electronics: DAE4 Sn779;Calibrated: 2014/2/25
- Phantom: ELI v5.0;Type: QDOVA002AA;Serial: TP:1133
- Measurement SW: DASY52, Version 52.8 (7);SEMCAD X Version 14.6.10 (7164)

Flat/Area Scan (61x111x1):
Interpolated grid: dx=1.500 mm, dy=1.500 mm
Maximum value of SAR (interpolated) = 0.409 W/kg

Flat/Zoom Scan (5x5x7)/Cube 0:
Measurement grid: dx=8mm, dy=8mm, dz=5mm
Reference Value = 12.049 V/m; Power Drift = 0.01 dB
Peak SAR (extrapolated) = 0.492 W/kg
SAR(1 g) = 0.304 W/kg; SAR(10 g) = 0.181 W/kg
Maximum value of SAR (measured) = 0.404 W/kg

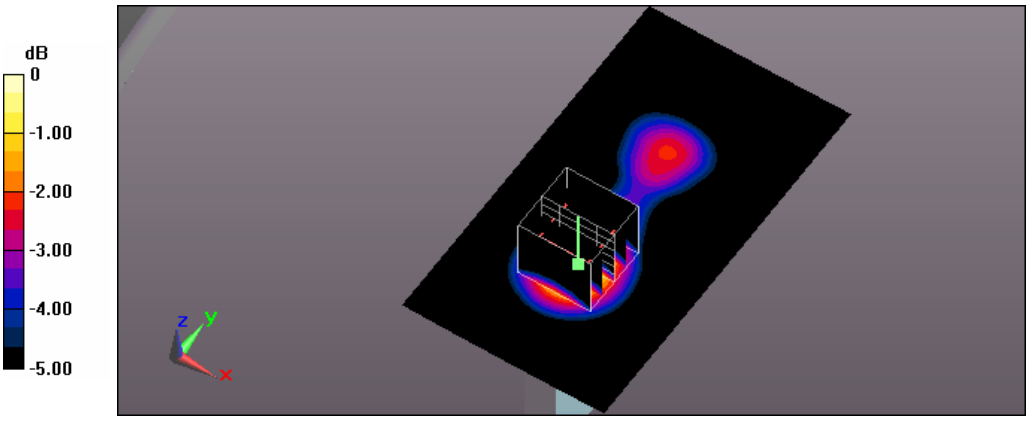

0 dB = 0.404 W/kg = -3.94 dBW/kg

Test Laboratory: A Test Lab Techno Corp.
Date: 2014/9/27Time: AM 08:42:02
43_Flat_LTE Band2 BW 20M CH19100_QPSK with 50 RB Size 0 RB Offset side 6 surface to phantom 10mm
DUT: AC785S-500;Type: WWAN Mobile Hotspot Portable Device;Serial: 014197000002053
Communication System: UID 0, Generic LTE (0);Frequency: 1900 MHz;Duty Cycle: 1:1
Medium parameters used: f = 1900 MHz; σ = 1.475 S/m; ε_r = 52.463; ρ = 1000 kg/m^3
Phantom section: Flat Section
Measurement Standard: DASY5 (IEEE/IEC/ANSI C63.19-2011)
DASY Configuration:

- Area Scan setting - Find Secondary Maximum Within:2.0dB and with a peak SAR value greater than 0.5 W/Kg
- Probe: EX3DV4 - SN3977;ConvF(7.37, 7.37, 7.37); Calibrated: 2014/2/17;
- Sensor-Surface: 2mm (Mechanical Surface Detection)
- Electronics: DAE4 Sn779;Calibrated: 2014/2/25
- Phantom: ELI v5.0;Type: QDOVA002AA;Serial: TP:1133
- Measurement SW: DASY52, Version 52.8 (7);SEMCAD X Version 14.6.10 (7164)

Flat/Area Scan (61x111x1):
Interpolated grid: dx=1.500 mm, dy=1.500 mm
Maximum value of SAR (interpolated) = 0.400 W/kg

Flat/Zoom Scan (5x5x7)/Cube 0:
Measurement grid: dx=8mm, dy=8mm, dz=5mm
Reference Value = 14.296 V/m; Power Drift = 0.13 dB
Peak SAR (extrapolated) = 0.522 W/kg
SAR(1 g) = 0.297 W/kg; SAR(10 g) = 0.163 W/kg
Maximum value of SAR (measured) = 0.413 W/kg

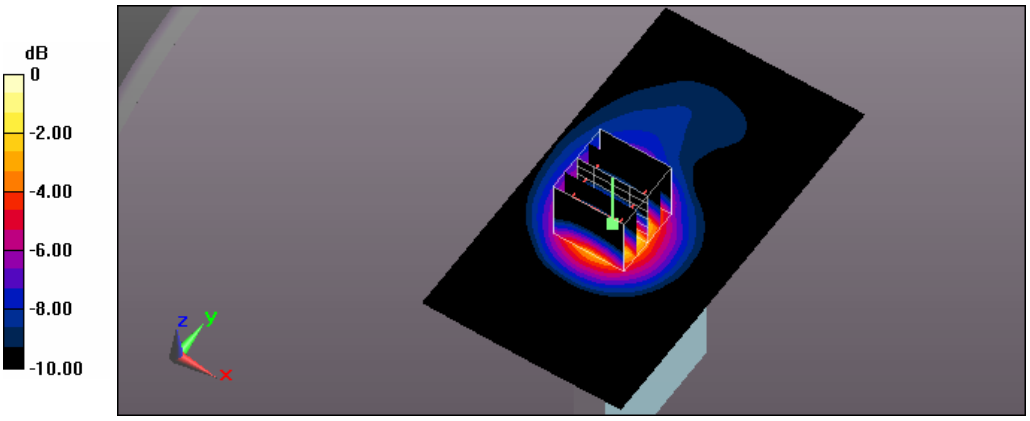

0 dB = 0.413 W/kg = -3.84 dBW/kg

Test Laboratory: A Test Lab Techno Corp.
Date: 2014/9/27Time: PM 11:12:58
44_Flat_LTE Band2 BW 20M CH19100_QPSK with 100 RB Size 0 RB Offset side 1 surface to phantom 10mm
DUT: AC785S-500;Type: WWAN Mobile Hotspot Portable Device;Serial: 014197000002053
Communication System: UID 0, Generic LTE (0);Frequency: 1900 MHz;Duty Cycle: 1:1
Medium parameters used: f = 1900 MHz; σ = 1.475 S/m; ε_r = 52.463; ρ = 1000 kg/m^3
Phantom section: Flat Section
Measurement Standard: DASY5 (IEEE/IEC/ANSI C63.19-2011)
DASY Configuration:

- Area Scan setting - Find Secondary Maximum Within:2.0dB and with a peak SAR value greater than 0.5 W/Kg
- Probe: EX3DV4 - SN3977;ConvF(7.37, 7.37, 7.37); Calibrated: 2014/2/17;
- Sensor-Surface: 2mm (Mechanical Surface Detection)
- Electronics: DAE4 Sn779;Calibrated: 2014/2/25
- Phantom: ELI v5.0;Type: QDOVA002AA;Serial: TP:1133
- Measurement SW: DASY52, Version 52.8 (7);SEMCAD X Version 14.6.10 (7164)

Flat/Area Scan (71x111x1):
Interpolated grid: dx=1.500 mm, dy=1.500 mm
Maximum value of SAR (interpolated) = 1.64 W/kg

Flat/Zoom Scan (5x5x7)/Cube 0:
Measurement grid: dx=8mm, dy=8mm, dz=5mm
Reference Value = 15.277 V/m; Power Drift = -0.08 dB
Peak SAR (extrapolated) = 1.85 W/kg
SAR(1 g) = 1.05 W/kg; SAR(10 g) = 0.577 W/kg
Maximum value of SAR (measured) = 1.46 W/kg

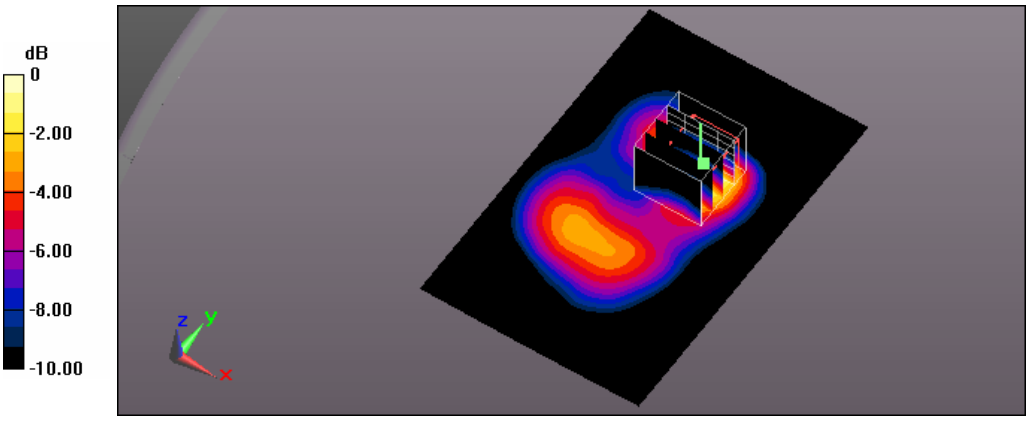

0 dB = 1.46 W/kg = 1.64 dBW/kg

Test Laboratory: A Test Lab Techno Corp.
Date: 2014/9/26Time: PM 10:24:23
50_Flat_LTE Band4 BW 20M CH20050_QPSK with 1 RB Size 0 RB Offset side 6 surface to phantom 10mm
DUT: AC785S-500;Type: WWAN Mobile Hotspot Portable Device;Serial: 014197000002053
Communication System: UID 0, Generic LTE (0);Frequency: 1720 MHz;Duty Cycle: 1:1
Medium parameters used: f = 1720 MHz; σ = 1.494 S/m; ε_r = 54.545; ρ = 1000 kg/m^3
Phantom section: Flat Section
Measurement Standard: DASY5 (IEEE/IEC/ANSI C63.19-2011)
DASY Configuration:

- Area Scan setting - Find Secondary Maximum Within:2.0dB and with a peak SAR value greater than 0.5 W/Kg
- Probe: EX3DV4 - SN3977;ConvF(7.69, 7.69, 7.69); Calibrated: 2014/2/17;
- Sensor-Surface: 2mm (Mechanical Surface Detection)
- Electronics: DAE4 Sn779;Calibrated: 2014/2/25
- Phantom: ELI v5.0;Type: QDOVA002AA;Serial: TP:1133
- Measurement SW: DASY52, Version 52.8 (7);SEMCAD X Version 14.6.10 (7164)

Flat/Area Scan (61x111x1):
Interpolated grid: dx=1.500 mm, dy=1.500 mm
Maximum value of SAR (interpolated) = 1.91 W/kg

Flat/Zoom Scan (5x5x7)/Cube 0:
Measurement grid: dx=8mm, dy=8mm, dz=5mm
Reference Value = 32.395 V/m; Power Drift = 0.13 dB
Peak SAR (extrapolated) = 2.35 W/kg
SAR(1 g) = 1.37 W/kg; SAR(10 g) = 0.724 W/kg
Maximum value of SAR (measured) = 1.91 W/kg

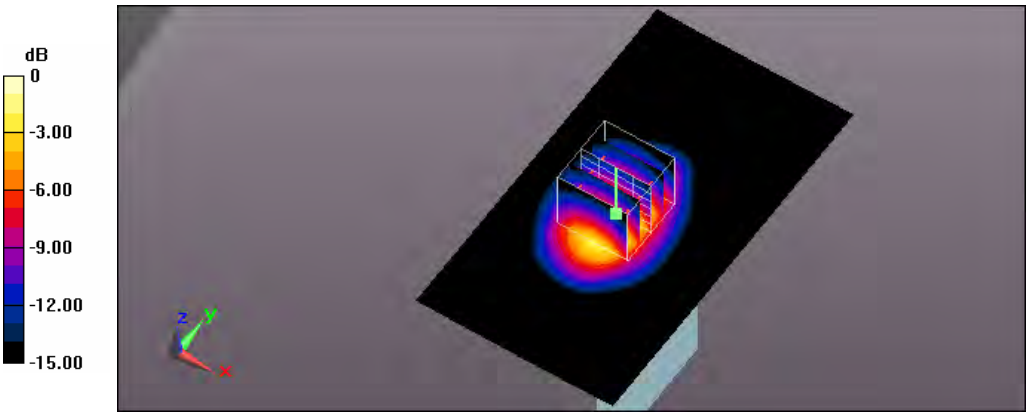

0 dB = 1.91 W/kg = 2.81 dBW/kg

Test Laboratory: A Test Lab Techno Corp.
Date: 2014/9/26Time: PM 11:07:53
45_Flat_LTE Band4 BW 20M CH20300_QPSK with 1 RB Size 0 RB Offset side 1 surface to phantom 10mm
DUT: AC785S-500;Type: WWAN Mobile Hotspot Portable Device;Serial: 014197000002053
Communication System: UID 0, Generic LTE (0);Frequency: 1745 MHz;Duty Cycle: 1:1
Medium parameters used: f = 1745 MHz; σ = 1.514 S/m; ε_r = 54.682; ρ = 1000 kg/m^3
Phantom section: Flat Section
Measurement Standard: DASY5 (IEEE/IEC/ANSI C63.19-2011)
DASY Configuration:

- Area Scan setting - Find Secondary Maximum Within:2.0dB and with a peak SAR value greater than 0.5 W/Kg
- Probe: EX3DV4 - SN3977;ConvF(7.69, 7.69, 7.69); Calibrated: 2014/2/17;
- Sensor-Surface: 2mm (Mechanical Surface Detection)
- Electronics: DAE4 Sn779;Calibrated: 2014/2/25
- Phantom: ELI v5.0;Type: QDOVA002AA;Serial: TP:1133
- Measurement SW: DASY52, Version 52.8 (7);SEMCAD X Version 14.6.10 (7164)

Flat/Area Scan (71x111x1):
Interpolated grid: dx=1.500 mm, dy=1.500 mm
Maximum value of SAR (interpolated) = 0.875 W/kg

Flat/Zoom Scan (5x5x7)/Cube 0:
Measurement grid: dx=8mm, dy=8mm, dz=5mm
Reference Value = 19.249 V/m; Power Drift = -0.19 dB
Peak SAR (extrapolated) = 0.945 W/kg
SAR(1 g) = 0.535 W/kg; SAR(10 g) = 0.332 W/kg
Maximum value of SAR (measured) = 0.721 W/kg

Flat/Zoom Scan (5x5x7)/Cube 1:
Measurement grid: dx=8mm, dy=8mm, dz=5mm
Reference Value = 19.249 V/m; Power Drift = -0.19 dB
Peak SAR (extrapolated) = 0.756 W/kg
SAR(1 g) = 0.515 W/kg; SAR(10 g) = 0.323 W/kg
Maximum value of SAR (measured) = 0.640 W/kg

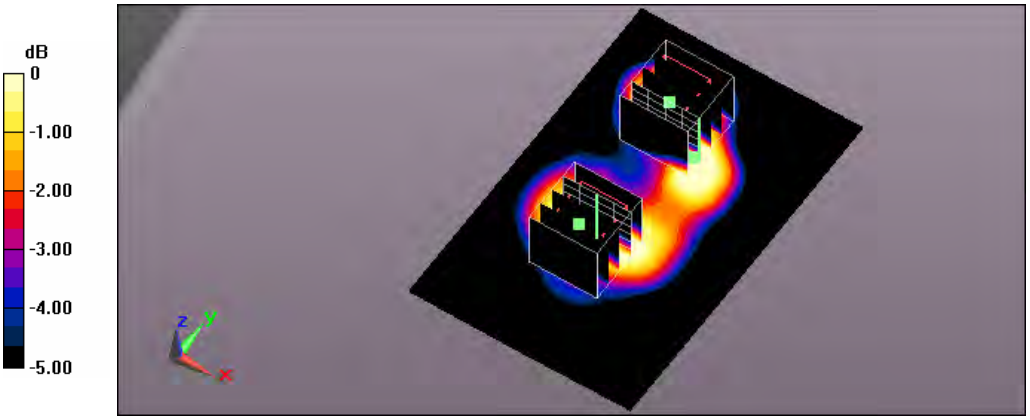

0 dB = 0.640 W/kg = -1.94 dBW/kg

Test Laboratory: A Test Lab Techno Corp.
Date: 2014/9/26Time: PM 11:54:39
46_Flat_LTE Band4 BW 20M CH20300_QPSK with 1 RB Size 0 RB Offset side 2 surface to phantom 10mm
DUT: AC785S-500;Type: WWAN Mobile Hotspot Portable Device;Serial: 014197000002053
Communication System: UID 0, Generic LTE (0);Frequency: 1745 MHz;Duty Cycle: 1:1
Medium parameters used: f = 1745 MHz; σ = 1.514 S/m; ε_r = 54.682; ρ = 1000 kg/m^3
Phantom section: Flat Section
Measurement Standard: DASY5 (IEEE/IEC/ANSI C63.19-2011)
DASY Configuration:

- Area Scan setting - Find Secondary Maximum Within:2.0dB and with a peak SAR value greater than 0.5 W/Kg
- Probe: EX3DV4 - SN3977;ConvF(7.69, 7.69, 7.69); Calibrated: 2014/2/17;
- Sensor-Surface: 2mm (Mechanical Surface Detection)
- Electronics: DAE4 Sn779;Calibrated: 2014/2/25
- Phantom: ELI v5.0;Type: QDOVA002AA;Serial: TP:1133
- Measurement SW: DASY52, Version 52.8 (7);SEMCAD X Version 14.6.10 (7164)

Flat/Area Scan (71x111x1):
Interpolated grid: dx=1.500 mm, dy=1.500 mm
Maximum value of SAR (interpolated) = 0.446 W/kg

Flat/Zoom Scan (5x5x7)/Cube 0:
Measurement grid: dx=8mm, dy=8mm, dz=5mm
Reference Value = 14.917 V/m; Power Drift = 0.09 dB
Peak SAR (extrapolated) = 1.51 W/kg
SAR(1 g) = 0.331 W/kg; SAR(10 g) = 0.197 W/kg
Maximum value of SAR (measured) = 0.432 W/kg

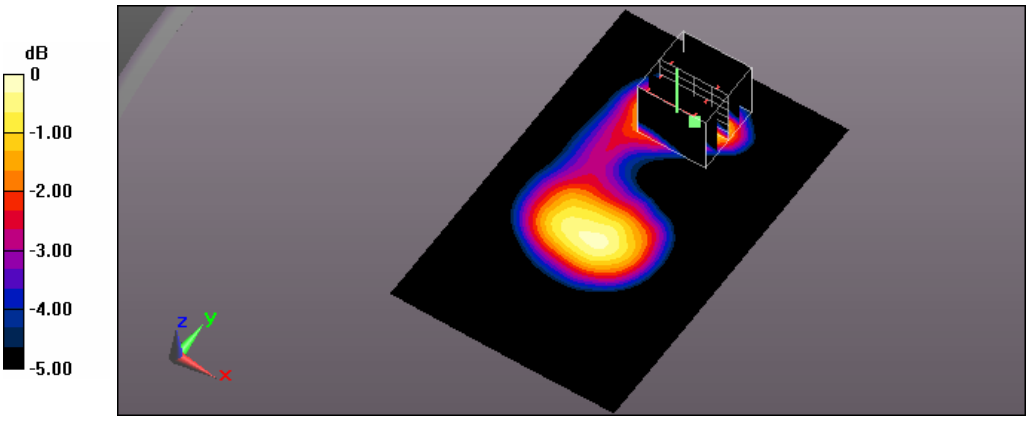

0 dB = 0.432 W/kg = -3.65 dBW/kg

Test Laboratory: A Test Lab Techno Corp.
Date: 2014/9/27Time: AM 12:24:34
47_Flat_LTE Band4 BW 20M CH20300_QPSK with 1 RB Size 0 RB Offset side 3 surface to phantom 10mm
DUT: AC785S-500;Type: WWAN Mobile Hotspot Portable Device;Serial: 014197000002053
Communication System: UID 0, Generic LTE (0);Frequency: 1745 MHz;Duty Cycle: 1:1
Medium parameters used: f = 1745 MHz; σ = 1.514 S/m; ε_r = 54.682; ρ = 1000 kg/m^3
Phantom section: Flat Section
Measurement Standard: DASY5 (IEEE/IEC/ANSI C63.19-2011)
DASY Configuration:

- Area Scan setting - Find Secondary Maximum Within:2.0dB and with a peak SAR value greater than 0.5 W/Kg
- Probe: EX3DV4 - SN3977;ConvF(7.69, 7.69, 7.69); Calibrated: 2014/2/17;
- Sensor-Surface: 2mm (Mechanical Surface Detection)
- Electronics: DAE4 Sn779;Calibrated: 2014/2/25
- Phantom: ELI v5.0;Type: QDOVA002AA;Serial: TP:1133
- Measurement SW: DASY52, Version 52.8 (7);SEMCAD X Version 14.6.10 (7164)

Flat/Area Scan (61x111x1):
Interpolated grid: dx=1.500 mm, dy=1.500 mm
Maximum value of SAR (interpolated) = 0.109 W/kg

Flat/Zoom Scan (5x5x7)/Cube 0:
Measurement grid: dx=8mm, dy=8mm, dz=5mm
Reference Value = 8.805 V/m; Power Drift = -0.12 dB
Peak SAR (extrapolated) = 0.122 W/kg
SAR(1 g) = 0.079 W/kg; SAR(10 g) = 0.049 W/kg
Maximum value of SAR (measured) = 0.102 W/kg

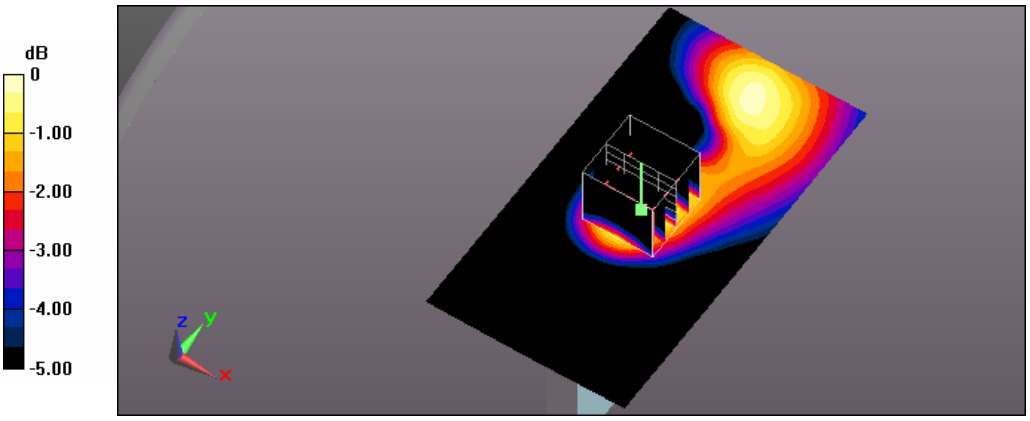

0 dB = 0.102 W/kg = -9.91 dBW/kg

Test Laboratory: A Test Lab Techno Corp.
Date: 2014/9/27Time: AM 12:43:02
48_Flat_LTE Band4 BW 20M CH20300_QPSK with 1 RB Size 0 RB Offset side 4 surface to phantom 10mm
DUT: AC785S-500;Type: WWAN Mobile Hotspot Portable Device;Serial: 014197000002053
Communication System: UID 0, Generic LTE (0);Frequency: 1745 MHz;Duty Cycle: 1:1
Medium parameters used: f = 1745 MHz; σ = 1.514 S/m; ε_r = 54.682; ρ = 1000 kg/m^3
Phantom section: Flat Section
Measurement Standard: DASY5 (IEEE/IEC/ANSI C63.19-2011)
DASY Configuration:

- Area Scan setting - Find Secondary Maximum Within:2.0dB and with a peak SAR value greater than 0.5 W/Kg
- Probe: EX3DV4 - SN3977;ConvF(7.69, 7.69, 7.69); Calibrated: 2014/2/17;
- Sensor-Surface: 2mm (Mechanical Surface Detection)
- Electronics: DAE4 Sn779;Calibrated: 2014/2/25
- Phantom: ELI v5.0;Type: QDOVA002AA;Serial: TP:1133
- Measurement SW: DASY52, Version 52.8 (7);SEMCAD X Version 14.6.10 (7164)

Flat/Area Scan (61x111x1):
Interpolated grid: dx=1.500 mm, dy=1.500 mm
Maximum value of SAR (interpolated) = 0.403 W/kg

Flat/Zoom Scan (5x5x7)/Cube 0:
Measurement grid: dx=8mm, dy=8mm, dz=5mm
Reference Value = 13.537 V/m; Power Drift = 0.03 dB
Peak SAR (extrapolated) = 0.481 W/kg
SAR(1 g) = 0.307 W/kg; SAR(10 g) = 0.191 W/kg
Maximum value of SAR (measured) = 0.399 W/kg

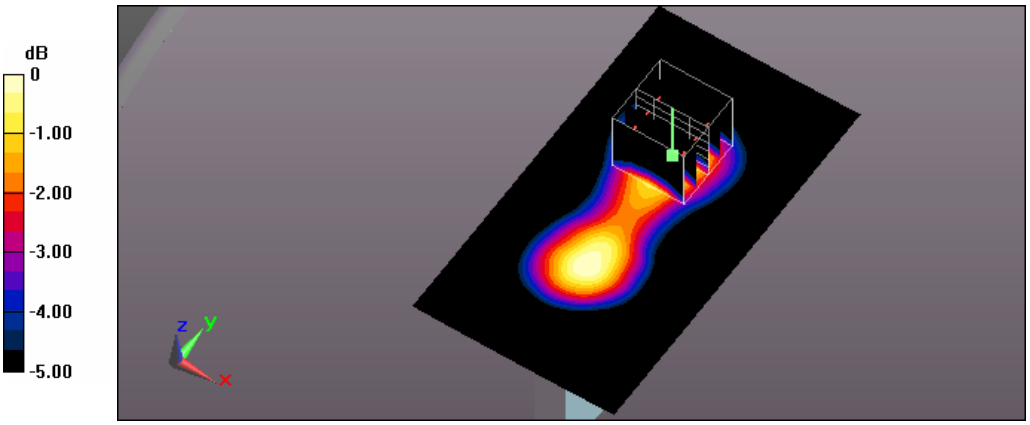

0 dB = 0.399 W/kg = -3.99 dBW/kg

Test Laboratory: A Test Lab Techno Corp.
Date: 2014/9/26Time: PM 10:00:04
49_Flat_LTE Band4 BW 20M CH20300_QPSK with 1 RB Size 0 RB Offset side 6 surface to phantom 10mm
DUT: AC785S-500;Type: WWAN Mobile Hotspot Portable Device;Serial: 014197000002053
Communication System: UID 0, Generic LTE (0);Frequency: 1745 MHz;Duty Cycle: 1:1
Medium parameters used: f = 1745 MHz; σ = 1.514 S/m; ε_r = 54.682; ρ = 1000 kg/m^3
Phantom section: Flat Section
Measurement Standard: DASY5 (IEEE/IEC/ANSI C63.19-2011)
DASY Configuration:

- Area Scan setting - Find Secondary Maximum Within:2.0dB and with a peak SAR value greater than 0.5 W/Kg
- Probe: EX3DV4 - SN3977;ConvF(7.69, 7.69, 7.69); Calibrated: 2014/2/17;
- Sensor-Surface: 2mm (Mechanical Surface Detection)
- Electronics: DAE4 Sn779;Calibrated: 2014/2/25
- Phantom: ELI v5.0;Type: QDOVA002AA;Serial: TP:1133
- Measurement SW: DASY52, Version 52.8 (7);SEMCAD X Version 14.6.10 (7164)

Flat/Area Scan (61x111x1):
Interpolated grid: dx=1.500 mm, dy=1.500 mm
Maximum value of SAR (interpolated) = 1.96 W/kg

Flat/Zoom Scan (5x5x7)/Cube 0:
Measurement grid: dx=8mm, dy=8mm, dz=5mm
Reference Value = 33.384 V/m; Power Drift = 0.11 dB
Peak SAR (extrapolated) = 2.24 W/kg
SAR(1 g) = 1.3 W/kg; SAR(10 g) = 0.682 W/kg
Maximum value of SAR (measured) = 1.82 W/kg

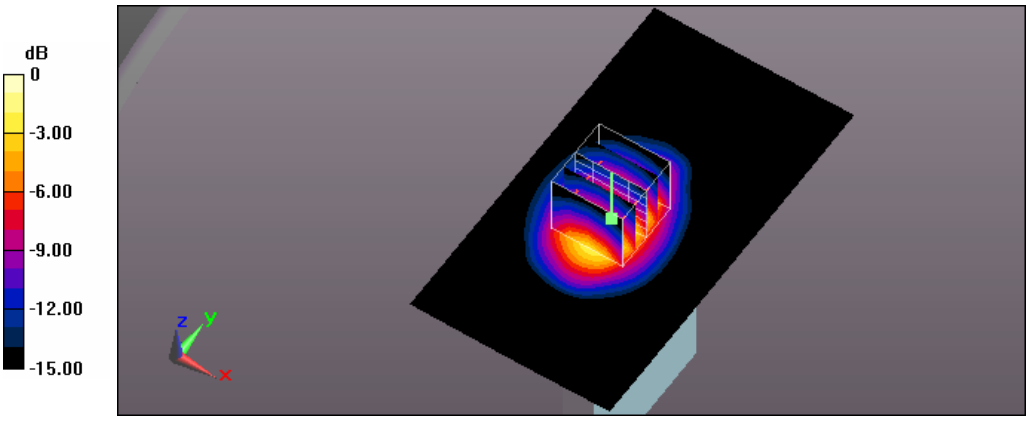

0 dB = 1.82 W/kg = 2.60 dBW/kg

Test Laboratory: A Test Lab Techno Corp.
Date: 2014/9/26Time: PM 10:47:48
51_Flat_LTE Band4 BW 20M CH20175_QPSK with 1 RB Size 0 RB Offset side 6 surface to phantom 10mm
DUT: AC785S-500;Type: WWAN Mobile Hotspot Portable Device;Serial: 014197000002053
Communication System: UID 0, Generic LTE (0);Frequency: 1732.5 MHz;Duty Cycle: 1:1
Medium parameters used (interpolated): f = 1732.5 MHz; σ = 1.506 S/m; ε_r = 54.605; ρ = 1000 kg/m^3
Phantom section: Flat Section
Measurement Standard: DASY5 (IEEE/IEC/ANSI C63.19-2011)
DASY Configuration:

- Area Scan setting - Find Secondary Maximum Within:2.0dB and with a peak SAR value greater than 0.5 W/Kg
- Probe: EX3DV4 - SN3977;ConvF(7.69, 7.69, 7.69); Calibrated: 2014/2/17;
- Sensor-Surface: 2mm (Mechanical Surface Detection)
- Electronics: DAE4 Sn779;Calibrated: 2014/2/25
- Phantom: ELI v5.0;Type: QDOVA002AA;Serial: TP:1133
- Measurement SW: DASY52, Version 52.8 (7);SEMCAD X Version 14.6.10 (7164)

Flat/Area Scan (61x111x1):
Interpolated grid: dx=1.500 mm, dy=1.500 mm
Maximum value of SAR (interpolated) = 1.88 W/kg

Flat/Zoom Scan (5x5x7)/Cube 0:
Measurement grid: dx=8mm, dy=8mm, dz=5mm
Reference Value = 30.868 V/m; Power Drift = 0.18 dB
Peak SAR (extrapolated) = 2.22 W/kg
SAR(1 g) = 1.29 W/kg; SAR(10 g) = 0.684 W/kg
Maximum value of SAR (measured) = 1.80 W/kg

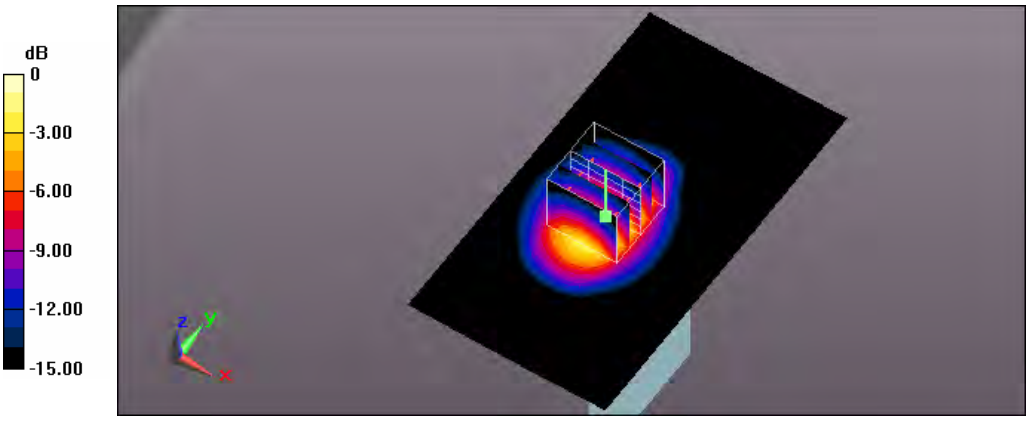

0 dB = 1.80 W/kg = 2.55 dBW/kg

Test Laboratory: A Test Lab Techno Corp.
Date: 2014/9/27Time: AM 04:11:04
57_Flat_LTE Band4 BW 20M CH20050_QPSK with 50 RB Size 0 RB Offset side 6 surface to phantom 10mm
DUT: AC785S-500;Type: WWAN Mobile Hotspot Portable Device;Serial: 014197000002053
Communication System: UID 0, Generic LTE (0);Frequency: 1720 MHz;Duty Cycle: 1:1
Medium parameters used: f = 1720 MHz; σ = 1.494 S/m; ε_r = 54.545; ρ = 1000 kg/m^3
Phantom section: Flat Section
Measurement Standard: DASY5 (IEEE/IEC/ANSI C63.19-2011)
DASY Configuration:

- Area Scan setting - Find Secondary Maximum Within:2.0dB and with a peak SAR value greater than 0.5 W/Kg
- Probe: EX3DV4 - SN3977;ConvF(7.69, 7.69, 7.69); Calibrated: 2014/2/17;
- Sensor-Surface: 2mm (Mechanical Surface Detection)
- Electronics: DAE4 Sn779;Calibrated: 2014/2/25
- Phantom: ELI v5.0;Type: QDOVA002AA;Serial: TP:1133
- Measurement SW: DASY52, Version 52.8 (7);SEMCAD X Version 14.6.10 (7164)

Flat/Area Scan (61x111x1):
Interpolated grid: dx=1.500 mm, dy=1.500 mm
Maximum value of SAR (interpolated) = 1.42 W/kg

Flat/Zoom Scan (5x5x7)/Cube 0:
Measurement grid: dx=8mm, dy=8mm, dz=5mm
Reference Value = 29.698 V/m; Power Drift = 0.11 dB
Peak SAR (extrapolated) = 1.72 W/kg
SAR(1 g) = 0.999 W/kg; SAR(10 g) = 0.531 W/kg
Maximum value of SAR (measured) = 1.38 W/kg

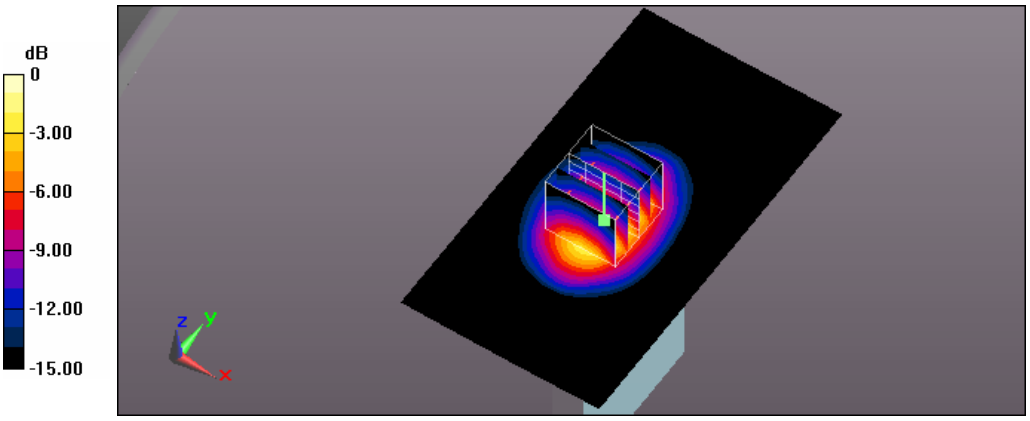

0 dB = 1.38 W/kg = 1.40 dBW/kg

Test Laboratory: A Test Lab Techno Corp.
Date: 2014/9/27Time: AM 04:50:54
58_Flat_LTE Band4 BW 20M CH20175_QPSK with 50 RB Size 0 RB Offset side 6 surface to phantom 10mm
DUT: AC785S-500;Type: WWAN Mobile Hotspot Portable Device;Serial: 014197000002053
Communication System: UID 0, Generic LTE (0);Frequency: 1732.5 MHz;Duty Cycle: 1:1
Medium parameters used (interpolated): f = 1732.5 MHz; σ = 1.506 S/m; ε_r = 54.605; ρ = 1000 kg/m^3
Phantom section: Flat Section
Measurement Standard: DASY5 (IEEE/IEC/ANSI C63.19-2011)
DASY Configuration:

- Area Scan setting - Find Secondary Maximum Within:2.0dB and with a peak SAR value greater than 0.5 W/Kg
- Probe: EX3DV4 - SN3977;ConvF(7.69, 7.69, 7.69); Calibrated: 2014/2/17;
- Sensor-Surface: 2mm (Mechanical Surface Detection)
- Electronics: DAE4 Sn779;Calibrated: 2014/2/25
- Phantom: ELI v5.0;Type: QDOVA002AA;Serial: TP:1133
- Measurement SW: DASY52, Version 52.8 (7);SEMCAD X Version 14.6.10 (7164)

Flat/Area Scan (61x111x1):
Interpolated grid: dx=1.500 mm, dy=1.500 mm
Maximum value of SAR (interpolated) = 1.34 W/kg

Flat/Zoom Scan (5x5x7)/Cube 0:
Measurement grid: dx=8mm, dy=8mm, dz=5mm
Reference Value = 29.764 V/m; Power Drift = -0.13 dB
Peak SAR (extrapolated) = 1.61 W/kg
SAR(1 g) = 0.940 W/kg; SAR(10 g) = 0.498 W/kg
Maximum value of SAR (measured) = 1.31 W/kg

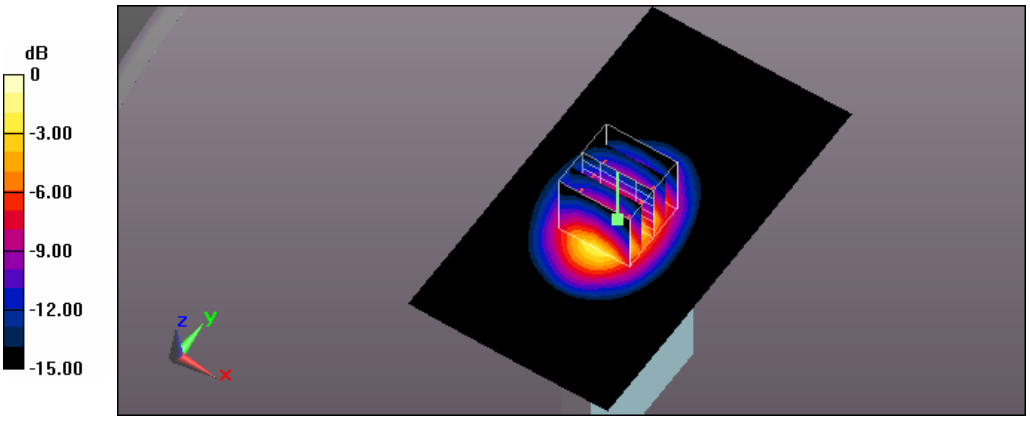

0 dB = 1.31 W/kg = 1.17 dBW/kg

Test Laboratory: A Test Lab Techno Corp.
Date: 2014/9/27Time: AM 03:16:44
52_Flat_LTE Band4 BW 20M CH20300_QPSK with 50 RB Size 0 RB Offset side 1 surface to phantom 10mm
DUT: AC785S-500;Type: WWAN Mobile Hotspot Portable Device;Serial: 014197000002053
Communication System: UID 0, Generic LTE (0);Frequency: 1745 MHz;Duty Cycle: 1:1
Medium parameters used: f = 1745 MHz; σ = 1.514 S/m; ε_r = 54.682; ρ = 1000 kg/m^3
Phantom section: Flat Section
Measurement Standard: DASY5 (IEEE/IEC/ANSI C63.19-2011)
DASY Configuration:

- Area Scan setting - Find Secondary Maximum Within:2.0dB and with a peak SAR value greater than 0.5 W/Kg
- Probe: EX3DV4 - SN3977;ConvF(7.69, 7.69, 7.69); Calibrated: 2014/2/17;
- Sensor-Surface: 2mm (Mechanical Surface Detection)
- Electronics: DAE4 Sn779;Calibrated: 2014/2/25
- Phantom: ELI v5.0;Type: QDOVA002AA;Serial: TP:1133
- Measurement SW: DASY52, Version 52.8 (7);SEMCAD X Version 14.6.10 (7164)

Flat/Area Scan (71x111x1):
Interpolated grid: dx=1.500 mm, dy=1.500 mm
Maximum value of SAR (interpolated) = 0.730 W/kg

Flat/Zoom Scan (5x5x7)/Cube 0:
Measurement grid: dx=8mm, dy=8mm, dz=5mm
Reference Value = 17.387 V/m; Power Drift = -0.16 dB
Peak SAR (extrapolated) = 0.861 W/kg
SAR(1 g) = 0.523 W/kg; SAR(10 g) = 0.323 W/kg
Maximum value of SAR (measured) = 0.679 W/kg

Flat/Zoom Scan (5x5x7)/Cube 1:
Measurement grid: dx=8mm, dy=8mm, dz=5mm
Reference Value = 17.387 V/m; Power Drift = -0.16 dB
Peak SAR (extrapolated) = 0.751 W/kg
SAR(1 g) = 0.505 W/kg; SAR(10 g) = 0.318 W/kg
Maximum value of SAR (measured) = 0.627 W/kg

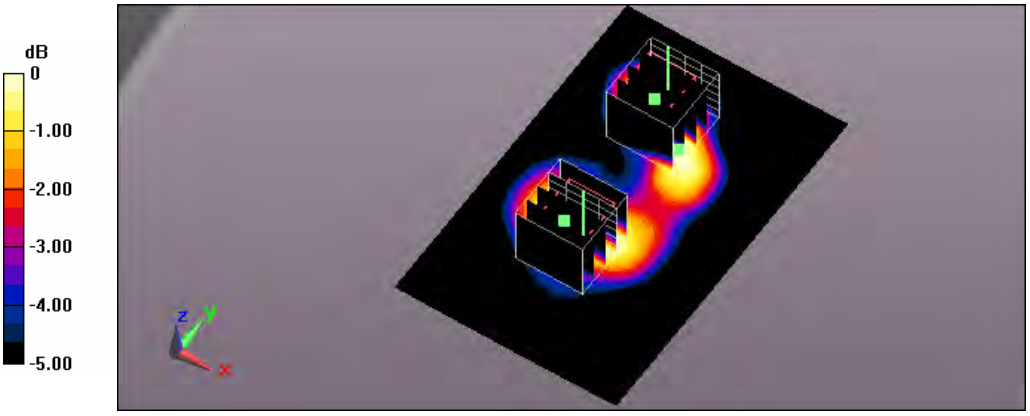

0 dB = 0.627 W/kg = -2.03 dBW/kg

Test Laboratory: A Test Lab Techno Corp.
Date: 2014/9/27Time: AM 05:18:50
53_Flat_LTE Band4 BW 20M CH20300_QPSK with 50 RB Size 0 RB Offset side 2 surface to phantom 10mm
DUT: AC785S-500;Type: WWAN Mobile Hotspot Portable Device;Serial: 014197000002053
Communication System: UID 0, Generic LTE (0);Frequency: 1745 MHz;Duty Cycle: 1:1
Medium parameters used: f = 1745 MHz; σ = 1.514 S/m; ε_r = 54.682; ρ = 1000 kg/m^3
Phantom section: Flat Section
Measurement Standard: DASY5 (IEEE/IEC/ANSI C63.19-2011)
DASY Configuration:

- Area Scan setting - Find Secondary Maximum Within:2.0dB and with a peak SAR value greater than 0.5 W/Kg
- Probe: EX3DV4 - SN3977;ConvF(7.69, 7.69, 7.69); Calibrated: 2014/2/17;
- Sensor-Surface: 2mm (Mechanical Surface Detection)
- Electronics: DAE4 Sn779;Calibrated: 2014/2/25
- Phantom: ELI v5.0;Type: QDOVA002AA;Serial: TP:1133
- Measurement SW: DASY52, Version 52.8 (7);SEMCAD X Version 14.6.10 (7164)

Flat/Area Scan (71x111x1):
Interpolated grid: dx=1.500 mm, dy=1.500 mm
Maximum value of SAR (interpolated) = 0.426 W/kg

Flat/Zoom Scan (5x5x7)/Cube 0:
Measurement grid: dx=8mm, dy=8mm, dz=5mm
Reference Value = 15.137 V/m; Power Drift = -0.16 dB
Peak SAR (extrapolated) = 0.492 W/kg
SAR(1 g) = 0.306 W/kg; SAR(10 g) = 0.179 W/kg
Maximum value of SAR (measured) = 0.403 W/kg

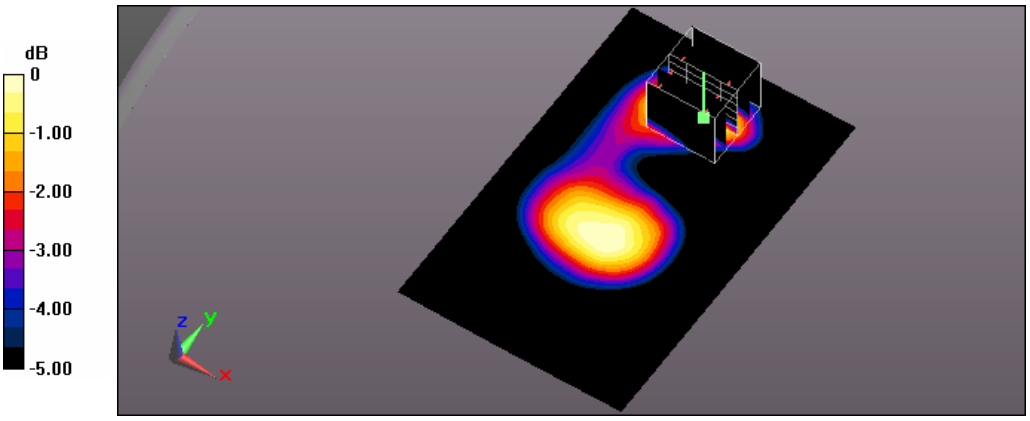

0 dB = 0.403 W/kg = -3.95 dBW/kg

Test Laboratory: A Test Lab Techno Corp.
Date: 2014/9/27Time: AM 05:42:23
54_Flat_LTE Band4 BW 20M CH20300_QPSK with 50 RB Size 0 RB Offset side 3 surface to phantom 10mm
DUT: AC785S-500;Type: WWAN Mobile Hotspot Portable Device;Serial: 014197000002053
Communication System: UID 0, Generic LTE (0);Frequency: 1745 MHz;Duty Cycle: 1:1
Medium parameters used: f = 1745 MHz; σ = 1.514 S/m; ε_r = 54.682; ρ = 1000 kg/m^3
Phantom section: Flat Section
Measurement Standard: DASY5 (IEEE/IEC/ANSI C63.19-2011)
DASY Configuration:

- Area Scan setting - Find Secondary Maximum Within:2.0dB and with a peak SAR value greater than 0.5 W/Kg
- Probe: EX3DV4 - SN3977;ConvF(7.69, 7.69, 7.69); Calibrated: 2014/2/17;
- Sensor-Surface: 2mm (Mechanical Surface Detection)
- Electronics: DAE4 Sn779;Calibrated: 2014/2/25
- Phantom: ELI v5.0;Type: QDOVA002AA;Serial: TP:1133
- Measurement SW: DASY52, Version 52.8 (7);SEMCAD X Version 14.6.10 (7164)

Flat/Area Scan (61x111x1):
Interpolated grid: dx=1.500 mm, dy=1.500 mm
Maximum value of SAR (interpolated) = 0.0860 W/kg

Flat/Zoom Scan (5x5x7)/Cube 0:
Measurement grid: dx=8mm, dy=8mm, dz=5mm
Reference Value = 7.504 V/m; Power Drift = 0.17 dB
Peak SAR (extrapolated) = 0.103 W/kg
SAR(1 g) = 0.067 W/kg; SAR(10 g) = 0.042 W/kg
Maximum value of SAR (measured) = 0.0865 W/kg

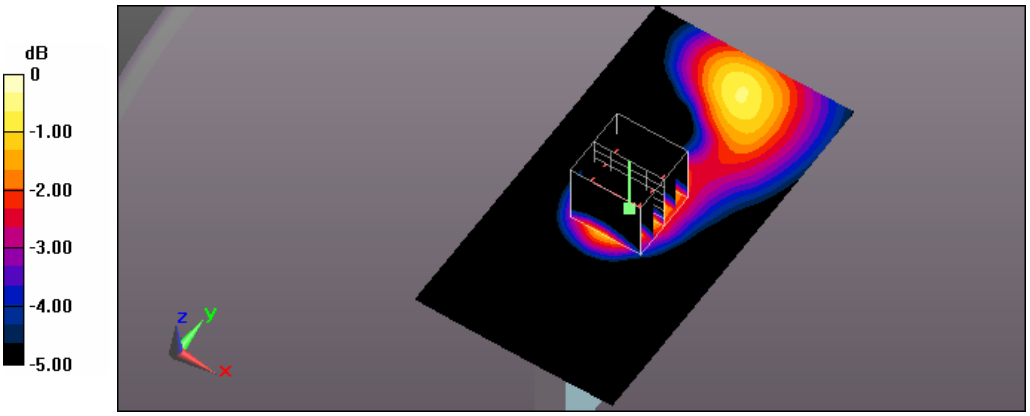

0 dB = 0.0865 W/kg = -10.63 dBW/kg

Test Laboratory: A Test Lab Techno Corp.
Date: 2014/9/27Time: AM 06:03:16
55_Flat_LTE Band4 BW 20M CH20300_QPSK with 50 RB Size 0 RB Offset side 4 surface to phantom 10mm
DUT: AC785S-500;Type: WWAN Mobile Hotspot Portable Device;Serial: 014197000002053
Communication System: UID 0, Generic LTE (0);Frequency: 1745 MHz;Duty Cycle: 1:1
Medium parameters used: f = 1745 MHz; σ = 1.514 S/m; ε_r = 54.682; ρ = 1000 kg/m^3
Phantom section: Flat Section
Measurement Standard: DASY5 (IEEE/IEC/ANSI C63.19-2011)
DASY Configuration:

- Area Scan setting - Find Secondary Maximum Within:2.0dB and with a peak SAR value greater than 0.5 W/Kg
- Probe: EX3DV4 - SN3977;ConvF(7.69, 7.69, 7.69); Calibrated: 2014/2/17;
- Sensor-Surface: 2mm (Mechanical Surface Detection)
- Electronics: DAE4 Sn779;Calibrated: 2014/2/25
- Phantom: ELI v5.0;Type: QDOVA002AA;Serial: TP:1133
- Measurement SW: DASY52, Version 52.8 (7);SEMCAD X Version 14.6.10 (7164)

Flat/Area Scan (61x111x1):
Interpolated grid: dx=1.500 mm, dy=1.500 mm
Maximum value of SAR (interpolated) = 0.349 W/kg

Flat/Zoom Scan (5x5x7)/Cube 0:
Measurement grid: dx=8mm, dy=8mm, dz=5mm
Reference Value = 12.393 V/m; Power Drift = 0.07 dB
Peak SAR (extrapolated) = 0.412 W/kg
SAR(1 g) = 0.262 W/kg; SAR(10 g) = 0.157 W/kg
Maximum value of SAR (measured) = 0.343 W/kg

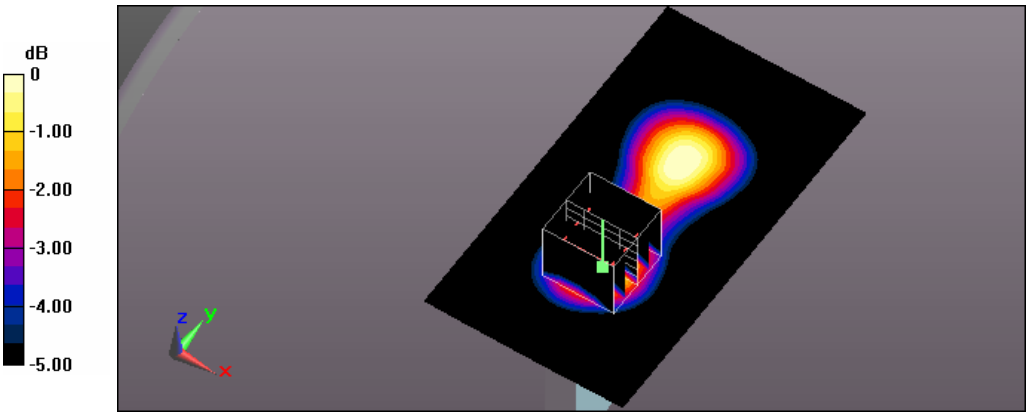

0 dB = 0.343 W/kg = -4.65 dBW/kg

Test Laboratory: A Test Lab Techno Corp.
Date: 2014/9/27Time: AM 03:50:40
56_Flat_LTE Band4 BW 20M CH20300_QPSK with 50 RB Size 0 RB Offset side 6 surface to phantom 10mm
DUT: AC785S-500;Type: WWAN Mobile Hotspot Portable Device;Serial: 014197000002053
Communication System: UID 0, Generic LTE (0);Frequency: 1745 MHz;Duty Cycle: 1:1
Medium parameters used: f = 1745 MHz; σ = 1.514 S/m; ε_r = 54.682; ρ = 1000 kg/m^3
Phantom section: Flat Section
Measurement Standard: DASY5 (IEEE/IEC/ANSI C63.19-2011)
DASY Configuration:

- Area Scan setting - Find Secondary Maximum Within:2.0dB and with a peak SAR value greater than 0.5 W/Kg
- Probe: EX3DV4 - SN3977;ConvF(7.69, 7.69, 7.69); Calibrated: 2014/2/17;
- Sensor-Surface: 2mm (Mechanical Surface Detection)
- Electronics: DAE4 Sn779;Calibrated: 2014/2/25
- Phantom: ELI v5.0;Type: QDOVA002AA;Serial: TP:1133
- Measurement SW: DASY52, Version 52.8 (7);SEMCAD X Version 14.6.10 (7164)

Flat/Area Scan (61x111x1):
Interpolated grid: dx=1.500 mm, dy=1.500 mm
Maximum value of SAR (interpolated) = 1.29 W/kg

Flat/Zoom Scan (5x5x7)/Cube 0:
Measurement grid: dx=8mm, dy=8mm, dz=5mm
Reference Value = 27.752 V/m; Power Drift = 0.15 dB
Peak SAR (extrapolated) = 1.60 W/kg
SAR(1 g) = 0.929 W/kg; SAR(10 g) = 0.491 W/kg
Maximum value of SAR (measured) = 1.29 W/kg

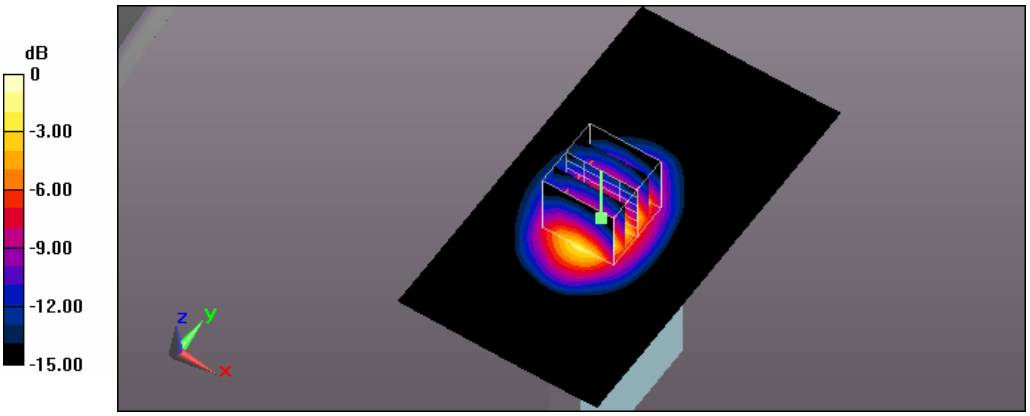

0 dB = 1.29 W/kg = 1.11 dBW/kg

Test Laboratory: A Test Lab Techno Corp.
Date: 2014/9/27Time: AM 01:11:53
59_Flat_LTE Band4 BW 20M CH20300_QPSK with 100 RB Size 0 RB Offset side 6 surface to phantom 10mm
DUT: AC785S-500;Type: WWAN Mobile Hotspot Portable Device;Serial: 014197000002053
Communication System: UID 0, Generic LTE (0);Frequency: 1745 MHz;Duty Cycle: 1:1
Medium parameters used: f = 1745 MHz; σ = 1.514 S/m; ε_r = 54.682; ρ = 1000 kg/m^3
Phantom section: Flat Section
Measurement Standard: DASY5 (IEEE/IEC/ANSI C63.19-2011)
DASY Configuration:

- Area Scan setting - Find Secondary Maximum Within:2.0dB and with a peak SAR value greater than 0.5 W/Kg
- Probe: EX3DV4 - SN3977;ConvF(7.69, 7.69, 7.69); Calibrated: 2014/2/17;
- Sensor-Surface: 2mm (Mechanical Surface Detection)
- Electronics: DAE4 Sn779;Calibrated: 2014/2/25
- Phantom: ELI v5.0;Type: QDOVA002AA;Serial: TP:1133
- Measurement SW: DASY52, Version 52.8 (7);SEMCAD X Version 14.6.10 (7164)

Flat/Area Scan (61x111x1):
Interpolated grid: dx=1.500 mm, dy=1.500 mm
Maximum value of SAR (interpolated) = 1.55 W/kg

Flat/Zoom Scan (5x5x7)/Cube 0:
Measurement grid: dx=8mm, dy=8mm, dz=5mm
Reference Value = 29.958 V/m; Power Drift = 0.11 dB
Peak SAR (extrapolated) = 1.88 W/kg
SAR(1 g) = 1.09 W/kg; SAR(10 g) = 0.582 W/kg
Maximum value of SAR (measured) = 1.51 W/kg

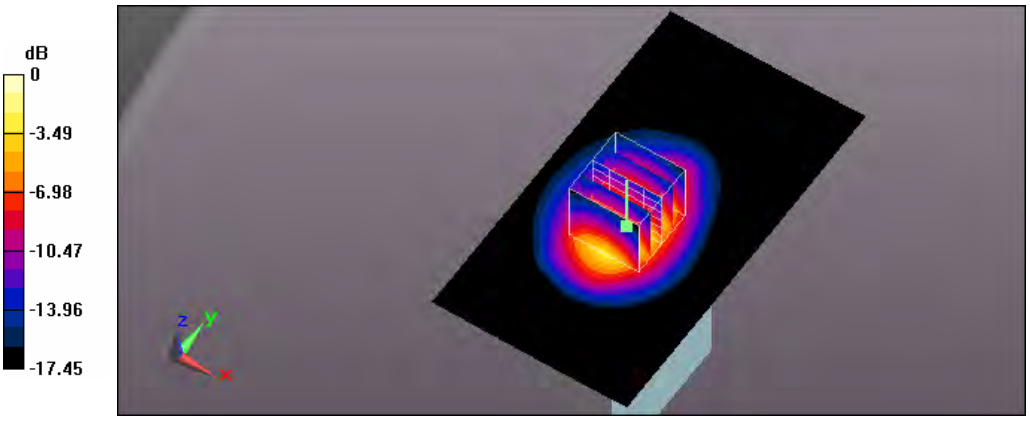

0 dB = 1.51 W/kg = 1.79 dBW/kg

Test Laboratory: A Test Lab Techno Corp.
Date: 2014/9/25Time: PM 04:37:22
60_Flat_LTE Band5 BW 10M CH20450_QPSK with 1 RB Size 0 RB Offset side 1 surface to phantom 10mm
DUT: AC785S-500;Type: WWAN Mobile Hotspot Portable Device;Serial: 014197000002053
Communication System: UID 0, Generic LTE (0);Frequency: 829 MHz;Duty Cycle: 1:1
Medium parameters used: f = 829 MHz; σ = 0.982 S/m; ε_r = 55.325; ρ = 1000 kg/m^3
Phantom section: Flat Section
Measurement Standard: DASY5 (IEEE/IEC/ANSI C63.19-2011)
DASY Configuration:

- Area Scan setting - Find Secondary Maximum Within:2.0dB and with a peak SAR value greater than 0.5 W/Kg
- Probe: EX3DV4 - SN3977;ConvF(9.74, 9.74, 9.74); Calibrated: 2014/2/17;
- Sensor-Surface: 2mm (Mechanical Surface Detection)
- Electronics: DAE4 Sn779;Calibrated: 2014/2/25
- Phantom: ELI v5.0;Type: QDOVA002AA;Serial: TP:1133
- Measurement SW: DASY52, Version 52.8 (7);SEMCAD X Version 14.6.10 (7164)

Flat/Area Scan (71x111x1):
Interpolated grid: dx=1.500 mm, dy=1.500 mm
Maximum value of SAR (interpolated) = 1.23 W/kg

Flat/Zoom Scan (5x5x7)/Cube 0:
Measurement grid: dx=8mm, dy=8mm, dz=5mm
Reference Value = 26.992 V/m; Power Drift = -0.02 dB
Peak SAR (extrapolated) = 1.45 W/kg
SAR(1 g) = 0.988 W/kg; SAR(10 g) = 0.677 W/kg
Maximum value of SAR (measured) = 1.22 W/kg

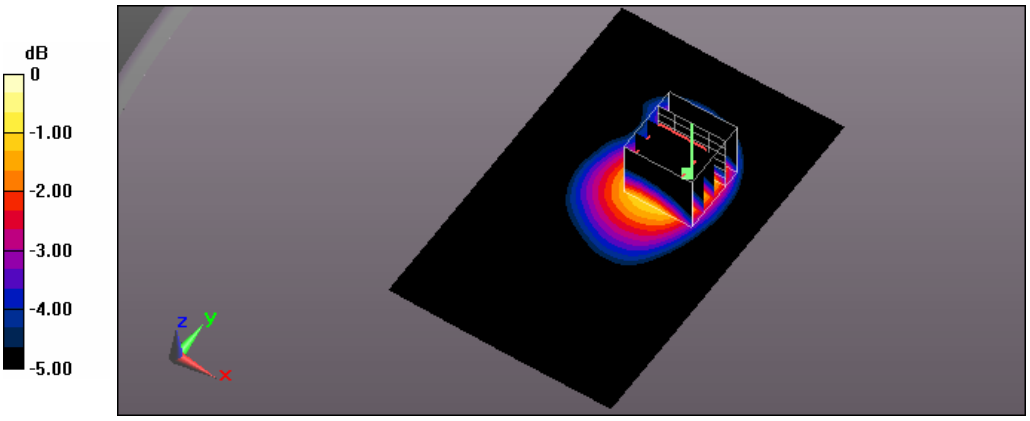

0 dB = 1.22 W/kg = 0.86 dBW/kg

Test Laboratory: A Test Lab Techno Corp.
Date: 2014/9/25Time: PM 07:31:45
63_Flat_LTE Band5 BW 10M CH20450_QPSK with 1 RB Size 0 RB Offset side 2 surface to phantom 10mm
DUT: AC785S-500;Type: WWAN Mobile Hotspot Portable Device;Serial: 014197000002053
Communication System: UID 0, Generic LTE (0);Frequency: 829 MHz;Duty Cycle: 1:1
Medium parameters used: f = 829 MHz; σ = 0.982 S/m; ε_r = 55.325; ρ = 1000 kg/m^3
Phantom section: Flat Section
Measurement Standard: DASY5 (IEEE/IEC/ANSI C63.19-2011)
DASY Configuration:

- Area Scan setting - Find Secondary Maximum Within:2.0dB and with a peak SAR value greater than 0.5 W/Kg
- Probe: EX3DV4 - SN3977;ConvF(9.74, 9.74, 9.74); Calibrated: 2014/2/17;
- Sensor-Surface: 2mm (Mechanical Surface Detection)
- Electronics: DAE4 Sn779;Calibrated: 2014/2/25
- Phantom: ELI v5.0;Type: QDOVA002AA;Serial: TP:1133
- Measurement SW: DASY52, Version 52.8 (7);SEMCAD X Version 14.6.10 (7164)

Flat/Area Scan (71x111x1):
Interpolated grid: dx=1.500 mm, dy=1.500 mm
Maximum value of SAR (interpolated) = 0.980 W/kg

Flat/Zoom Scan (5x5x7)/Cube 0:
Measurement grid: dx=8mm, dy=8mm, dz=5mm
Reference Value = 26.130 V/m; Power Drift = -0.04 dB
Peak SAR (extrapolated) = 1.14 W/kg
SAR(1 g) = 0.829 W/kg; SAR(10 g) = 0.559 W/kg
Maximum value of SAR (measured) = 0.998 W/kg

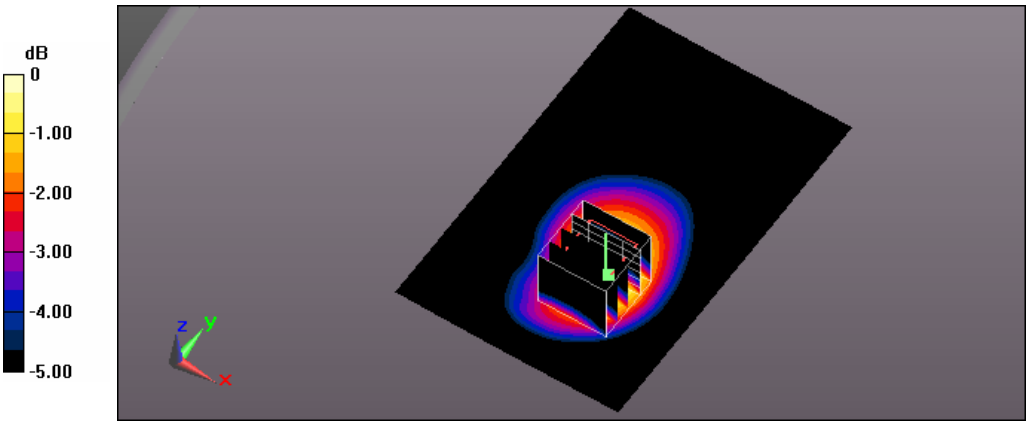

0 dB = 0.998 W/kg = -0.01 dBW/kg

Test Laboratory: A Test Lab Techno Corp.
Date: 2014/9/25Time: PM 09:53:13
66_Flat_LTE Band5 BW 10M CH20450_QPSK with 1 RB Size 0 RB Offset side 3 surface to phantom 10mm
DUT: AC785S-500;Type: WWAN Mobile Hotspot Portable Device;Serial: 014197000002053
Communication System: UID 0, Generic LTE (0);Frequency: 829 MHz;Duty Cycle: 1:1
Medium parameters used: f = 829 MHz; σ = 0.982 S/m; ε_r = 55.325; ρ = 1000 kg/m^3
Phantom section: Flat Section
Measurement Standard: DASY5 (IEEE/IEC/ANSI C63.19-2011)
DASY Configuration:

- Area Scan setting - Find Secondary Maximum Within:2.0dB and with a peak SAR value greater than 0.5 W/Kg
- Probe: EX3DV4 - SN3977;ConvF(9.74, 9.74, 9.74); Calibrated: 2014/2/17;
- Sensor-Surface: 2mm (Mechanical Surface Detection)
- Electronics: DAE4 Sn779;Calibrated: 2014/2/25
- Phantom: ELI v5.0;Type: QDOVA002AA;Serial: TP:1133
- Measurement SW: DASY52, Version 52.8 (7);SEMCAD X Version 14.6.10 (7164)

Flat/Area Scan (61x111x1):
Interpolated grid: dx=1.500 mm, dy=1.500 mm
Maximum value of SAR (interpolated) = 0.395 W/kg

Flat/Zoom Scan (5x5x7)/Cube 0:
Measurement grid: dx=8mm, dy=8mm, dz=5mm
Reference Value = 19.497 V/m; Power Drift = -0.00 dB
Peak SAR (extrapolated) = 0.443 W/kg
SAR(1 g) = 0.328 W/kg; SAR(10 g) = 0.234 W/kg
Maximum value of SAR (measured) = 0.392 W/kg

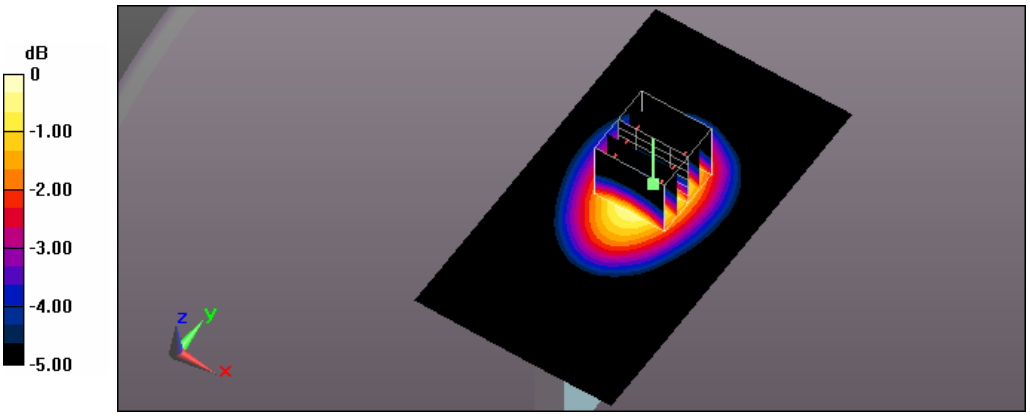

0 dB = 0.392 W/kg = -4.07 dBW/kg

Test Laboratory: A Test Lab Techno Corp.
Date: 2014/9/25Time: PM 10:31:19
67_Flat_LTE Band5 BW 10M CH20450_QPSK with 1 RB Size 0 RB Offset side 4 surface to phantom 10mm
DUT: AC785S-500;Type: WWAN Mobile Hotspot Portable Device;Serial: 014197000002053
Communication System: UID 0, Generic LTE (0);Frequency: 829 MHz;Duty Cycle: 1:1
Medium parameters used: f = 829 MHz; σ = 0.982 S/m; ε_r = 55.325; ρ = 1000 kg/m^3
Phantom section: Flat Section
Measurement Standard: DASY5 (IEEE/IEC/ANSI C63.19-2011)
DASY Configuration:

- Area Scan setting - Find Secondary Maximum Within:2.0dB and with a peak SAR value greater than 0.5 W/Kg
- Probe: EX3DV4 - SN3977;ConvF(9.74, 9.74, 9.74); Calibrated: 2014/2/17;
- Sensor-Surface: 2mm (Mechanical Surface Detection)
- Electronics: DAE4 Sn779;Calibrated: 2014/2/25
- Phantom: ELI v5.0;Type: QDOVA002AA;Serial: TP:1133
- Measurement SW: DASY52, Version 52.8 (7);SEMCAD X Version 14.6.10 (7164)

Flat/Area Scan (61x111x1):
Interpolated grid: dx=1.500 mm, dy=1.500 mm
Maximum value of SAR (interpolated) = 0.518 W/kg

Flat/Zoom Scan (5x5x7)/Cube 0:
Measurement grid: dx=8mm, dy=8mm, dz=5mm
Reference Value = 22.709 V/m; Power Drift = -0.01 dB
Peak SAR (extrapolated) = 0.592 W/kg
SAR(1 g) = 0.421 W/kg; SAR(10 g) = 0.289 W/kg
Maximum value of SAR (measured) = 0.517 W/kg

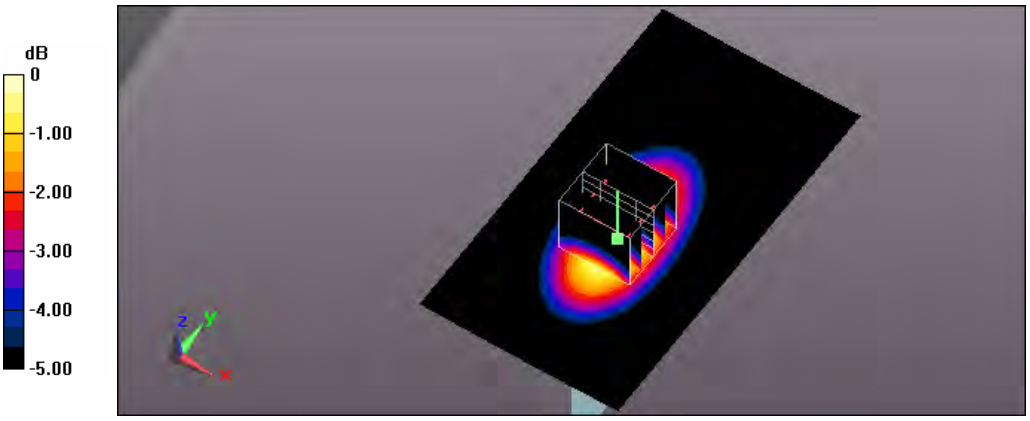

0 dB = 0.517 W/kg = -2.87 dBW/kg

Test Laboratory: A Test Lab Techno Corp.
Date: 2014/9/26Time: AM 10:20:02
68_Flat_LTE Band5 BW 10M CH20450_QPSK with 1 RB Size 0 RB Offset side 6 surface to phantom 10mm
DUT: AC785S-500;Type: WWAN Mobile Hotspot Portable Device;Serial: 014197000002053
Communication System: UID 0, Generic LTE (0);Frequency: 829 MHz;Duty Cycle: 1:1
Medium parameters used: f = 829 MHz; σ = 0.982 S/m; ε_r = 55.325; ρ = 1000 kg/m^3
Phantom section: Flat Section
Measurement Standard: DASY5 (IEEE/IEC/ANSI C63.19-2011)
DASY Configuration:

- Area Scan setting - Find Secondary Maximum Within:2.0dB and with a peak SAR value greater than 0.5 W/Kg
- Probe: EX3DV4 - SN3977;ConvF(9.74, 9.74, 9.74); Calibrated: 2014/2/17;
- Sensor-Surface: 2mm (Mechanical Surface Detection)
- Electronics: DAE4 Sn779;Calibrated: 2014/2/25
- Phantom: ELI v5.0;Type: QDOVA002AA;Serial: TP:1133
- Measurement SW: DASY52, Version 52.8 (7);SEMCAD X Version 14.6.10 (7164)

Flat/Area Scan (61x111x1):
Interpolated grid: dx=1.500 mm, dy=1.500 mm
Maximum value of SAR (interpolated) = 0.199 W/kg

Flat/Zoom Scan (5x5x7)/Cube 0:
Measurement grid: dx=8mm, dy=8mm, dz=5mm
Reference Value = 14.571 V/m; Power Drift = -0.06 dB
Peak SAR (extrapolated) = 0.249 W/kg
SAR(1 g) = 0.143 W/kg; SAR(10 g) = 0.082 W/kg
Maximum value of SAR (measured) = 0.200 W/kg

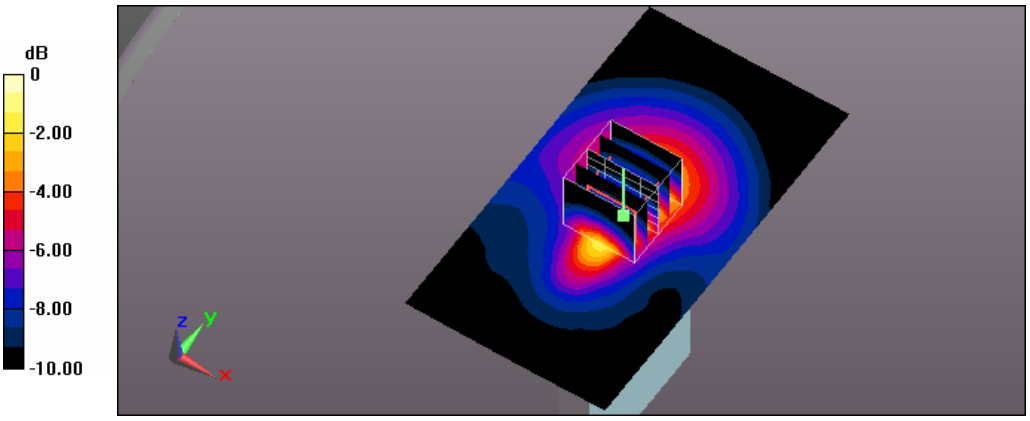

0 dB = 0.200 W/kg = -6.99 dBW/kg

Test Laboratory: A Test Lab Techno Corp.
Date: 2014/9/25Time: PM 04:58:43
61_Flat_LTE Band5 BW 10M CH20525_QPSK with 1 RB Size 0 RB Offset side 1 surface to phantom 10mm
DUT: AC785S-500;Type: WWAN Mobile Hotspot Portable Device;Serial: 014197000002053
Communication System: UID 0, Generic LTE (0);Frequency: 836.5 MHz;Duty Cycle: 1:1
Medium parameters used (interpolated): f = 836.5 MHz; σ = 0.992 S/m; ε_r = 55.304; ρ = 1000 kg/m^3
Phantom section: Flat Section
Measurement Standard: DASY5 (IEEE/IEC/ANSI C63.19-2011)
DASY Configuration:

- Area Scan setting - Find Secondary Maximum Within:2.0dB and with a peak SAR value greater than 0.5 W/Kg
- Probe: EX3DV4 - SN3977;ConvF(9.74, 9.74, 9.74); Calibrated: 2014/2/17;
- Sensor-Surface: 2mm (Mechanical Surface Detection)
- Electronics: DAE4 Sn779;Calibrated: 2014/2/25
- Phantom: ELI v5.0;Type: QDOVA002AA;Serial: TP:1133
- Measurement SW: DASY52, Version 52.8 (7);SEMCAD X Version 14.6.10 (7164)

Flat/Area Scan (71x111x1):
Interpolated grid: dx=1.500 mm, dy=1.500 mm
Maximum value of SAR (interpolated) = 1.14 W/kg

Flat/Zoom Scan (5x5x7)/Cube 0:
Measurement grid: dx=8mm, dy=8mm, dz=5mm
Reference Value = 26.939 V/m; Power Drift = -0.02 dB
Peak SAR (extrapolated) = 1.36 W/kg
SAR(1 g) = 0.928 W/kg; SAR(10 g) = 0.640 W/kg
Maximum value of SAR (measured) = 1.15 W/kg

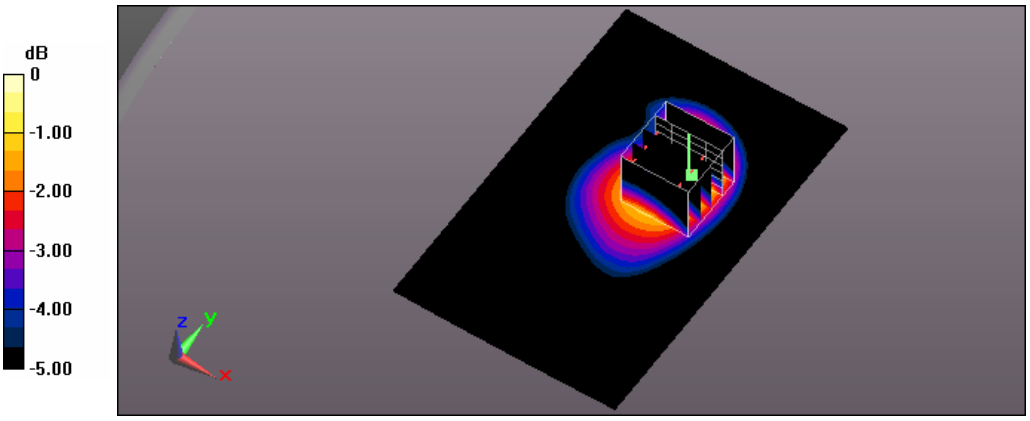

0 dB = 1.15 W/kg = 0.61 dBW/kg

Test Laboratory: A Test Lab Techno Corp.
Date: 2014/9/25Time: PM 07:52:18
64_Flat_LTE Band5 BW 10M CH20525_QPSK with 1 RB Size 0 RB Offset side 2 surface to phantom 10mm
DUT: AC785S-500;Type: WWAN Mobile Hotspot Portable Device;Serial: 014197000002053
Communication System: UID 0, Generic LTE (0);Frequency: 836.5 MHz;Duty Cycle: 1:1
Medium parameters used (interpolated): f = 836.5 MHz; σ = 0.992 S/m; ε_r = 55.304; ρ = 1000 kg/m^3
Phantom section: Flat Section
Measurement Standard: DASY5 (IEEE/IEC/ANSI C63.19-2011)
DASY Configuration:

- Area Scan setting - Find Secondary Maximum Within:2.0dB and with a peak SAR value greater than 0.5 W/Kg
- Probe: EX3DV4 - SN3977;ConvF(9.74, 9.74, 9.74); Calibrated: 2014/2/17;
- Sensor-Surface: 2mm (Mechanical Surface Detection)
- Electronics: DAE4 Sn779;Calibrated: 2014/2/25
- Phantom: ELI v5.0;Type: QDOVA002AA;Serial: TP:1133
- Measurement SW: DASY52, Version 52.8 (7);SEMCAD X Version 14.6.10 (7164)

Flat/Area Scan (71x111x1):
Interpolated grid: dx=1.500 mm, dy=1.500 mm
Maximum value of SAR (interpolated) = 0.932 W/kg

Flat/Zoom Scan (5x5x7)/Cube 0:
Measurement grid: dx=8mm, dy=8mm, dz=5mm
Reference Value = 26.210 V/m; Power Drift = -0.06 dB
Peak SAR (extrapolated) = 1.08 W/kg
SAR(1 g) = 0.789 W/kg; SAR(10 g) = 0.554 W/kg
Maximum value of SAR (measured) = 0.940 W/kg

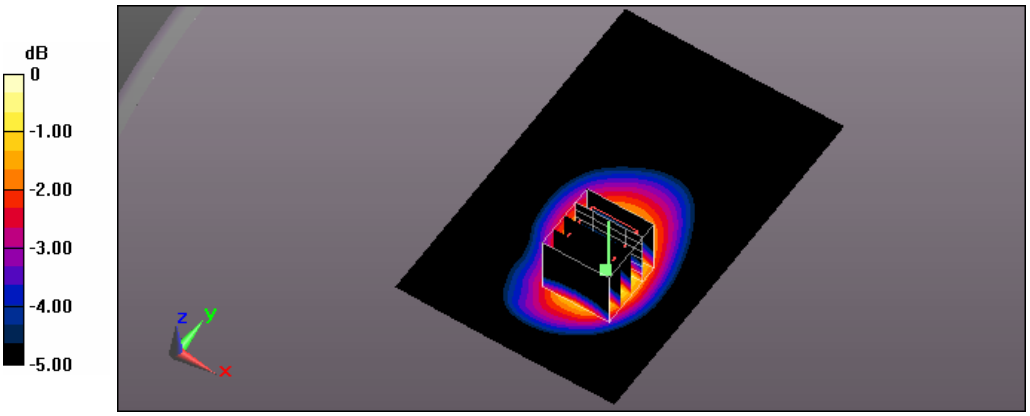

0 dB = 0.940 W/kg = -0.27 dBW/kg

Test Laboratory: A Test Lab Techno Corp.
Date: 2014/9/25Time: PM 05:32:41
62_Flat_LTE Band5 BW 10M CH20600_QPSK with 1 RB Size 0 RB Offset side 1 surface to phantom 10mm
DUT: AC785S-500;Type: WWAN Mobile Hotspot Portable Device;Serial: 014197000002053
Communication System: UID 0, Generic LTE (0);Frequency: 844 MHz;Duty Cycle: 1:1
Medium parameters used: f = 844 MHz; σ = 1.002 S/m; ε_r = 55.307; ρ = 1000 kg/m^3
Phantom section: Flat Section
Measurement Standard: DASY5 (IEEE/IEC/ANSI C63.19-2011)
DASY Configuration:

- Area Scan setting - Find Secondary Maximum Within:2.0dB and with a peak SAR value greater than 0.5 W/Kg
- Probe: EX3DV4 - SN3977;ConvF(9.74, 9.74, 9.74); Calibrated: 2014/2/17;
- Sensor-Surface: 2mm (Mechanical Surface Detection)
- Electronics: DAE4 Sn779;Calibrated: 2014/2/25
- Phantom: ELI v5.0;Type: QDOVA002AA;Serial: TP:1133
- Measurement SW: DASY52, Version 52.8 (7);SEMCAD X Version 14.6.10 (7164)

Flat/Area Scan (71x111x1):
Interpolated grid: dx=1.500 mm, dy=1.500 mm
Maximum value of SAR (interpolated) = 1.03 W/kg

Flat/Zoom Scan (5x5x7)/Cube 0:
Measurement grid: dx=8mm, dy=8mm, dz=5mm
Reference Value = 26.095 V/m; Power Drift = -0.04 dB
Peak SAR (extrapolated) = 1.21 W/kg
SAR(1 g) = 0.828 W/kg; SAR(10 g) = 0.574 W/kg
Maximum value of SAR (measured) = 1.03 W/kg

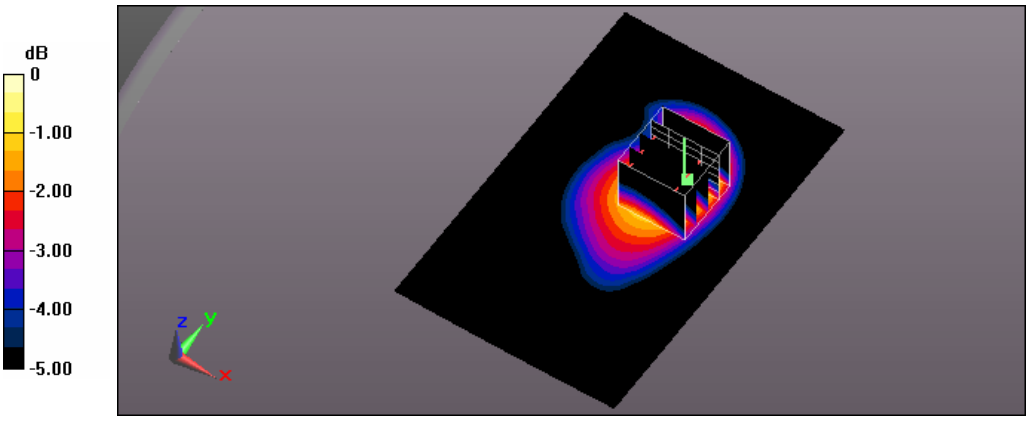

0 dB = 1.03 W/kg = 0.13 dBW/kg

Test Laboratory: A Test Lab Techno Corp.
Date: 2014/9/25Time: PM 08:13:34
65_Flat_LTE Band5 BW 10M CH20600_QPSK with 1 RB Size 0 RB Offset side 2 surface to phantom 10mm
DUT: AC785S-500;Type: WWAN Mobile Hotspot Portable Device;Serial: 014197000002053
Communication System: UID 0, Generic LTE (0);Frequency: 844 MHz;Duty Cycle: 1:1
Medium parameters used: f = 844 MHz; σ = 1.002 S/m; ε_r = 55.307; ρ = 1000 kg/m^3
Phantom section: Flat Section
Measurement Standard: DASY5 (IEEE/IEC/ANSI C63.19-2011)
DASY Configuration:

- Area Scan setting - Find Secondary Maximum Within:2.0dB and with a peak SAR value greater than 0.5 W/Kg
- Probe: EX3DV4 - SN3977;ConvF(9.74, 9.74, 9.74); Calibrated: 2014/2/17;
- Sensor-Surface: 2mm (Mechanical Surface Detection)
- Electronics: DAE4 Sn779;Calibrated: 2014/2/25
- Phantom: ELI v5.0;Type: QDOVA002AA;Serial: TP:1133
- Measurement SW: DASY52, Version 52.8 (7);SEMCAD X Version 14.6.10 (7164)

Flat/Area Scan (71x111x1):
Interpolated grid: dx=1.500 mm, dy=1.500 mm
Maximum value of SAR (interpolated) = 0.846 W/kg

Flat/Zoom Scan (5x5x7)/Cube 0:
Measurement grid: dx=8mm, dy=8mm, dz=5mm
Reference Value = 25.315 V/m; Power Drift = -0.00 dB
Peak SAR (extrapolated) = 0.964 W/kg
SAR(1 g) = 0.711 W/kg; SAR(10 g) = 0.513 W/kg
Maximum value of SAR (measured) = 0.849 W/kg

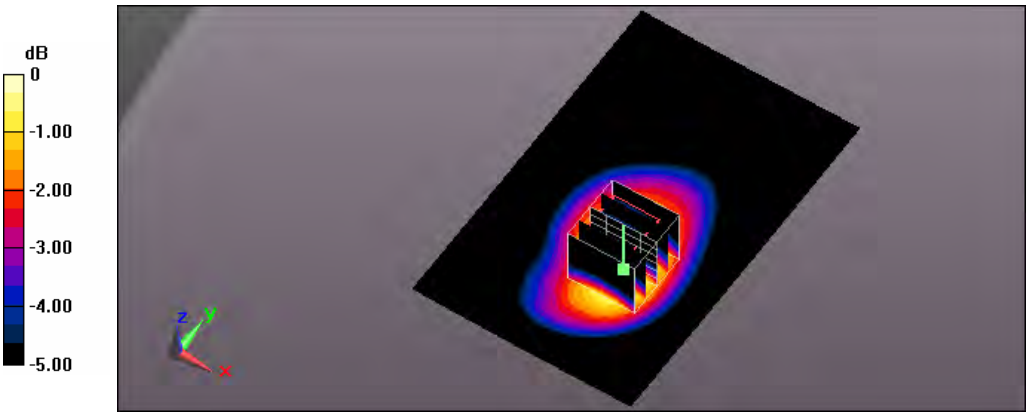

0 dB = 0.849 W/kg = -0.71 dBW/kg

Test Laboratory: A Test Lab Techno Corp.
Date: 2014/9/25Time: PM 05:54:24
69_Flat_LTE Band5 BW 10M CH20450_QPSK with 25 RB Size 0 RB Offset side 1 surface to phantom 10mm
DUT: AC785S-500;Type: WWAN Mobile Hotspot Portable Device;Serial: 014197000002053
Communication System: UID 0, Generic LTE (0);Frequency: 829 MHz;Duty Cycle: 1:1
Medium parameters used: f = 829 MHz; σ = 0.982 S/m; ε_r = 55.325; ρ = 1000 kg/m^3
Phantom section: Flat Section
Measurement Standard: DASY5 (IEEE/IEC/ANSI C63.19-2011)
DASY Configuration:

- Area Scan setting - Find Secondary Maximum Within:2.0dB and with a peak SAR value greater than 0.5 W/Kg
- Probe: EX3DV4 - SN3977;ConvF(9.74, 9.74, 9.74); Calibrated: 2014/2/17;
- Sensor-Surface: 2mm (Mechanical Surface Detection)
- Electronics: DAE4 Sn779;Calibrated: 2014/2/25
- Phantom: ELI v5.0;Type: QDOVA002AA;Serial: TP:1133
- Measurement SW: DASY52, Version 52.8 (7);SEMCAD X Version 14.6.10 (7164)

Flat/Area Scan (71x111x1):
Interpolated grid: dx=1.500 mm, dy=1.500 mm
Maximum value of SAR (interpolated) = 0.938 W/kg

Flat/Zoom Scan (5x5x7)/Cube 0:
Measurement grid: dx=8mm, dy=8mm, dz=5mm
Reference Value = 23.919 V/m; Power Drift = -0.03 dB
Peak SAR (extrapolated) = 1.11 W/kg
SAR(1 g) = 0.760 W/kg; SAR(10 g) = 0.520 W/kg
Maximum value of SAR (measured) = 0.945 W/kg

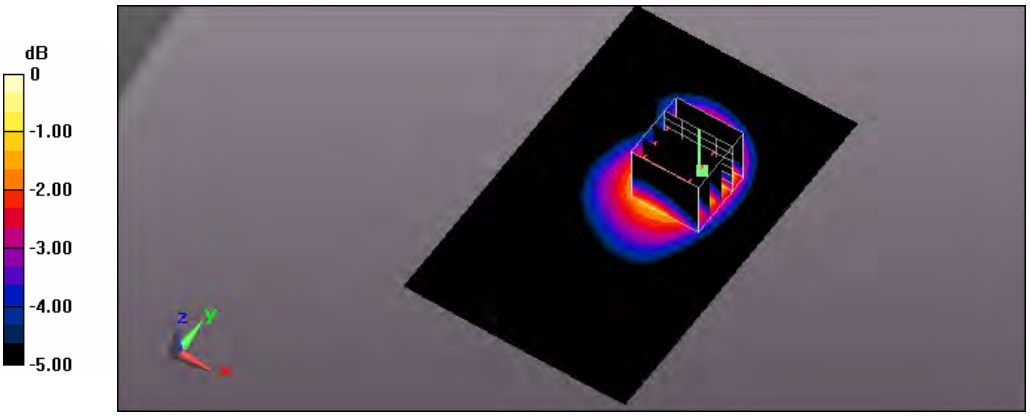

0 dB = 0.945 W/kg = -0.25 dBW/kg

Test Laboratory: A Test Lab Techno Corp.
Date: 2014/9/25Time: PM 08:33:24
72_Flat_LTE Band5 BW 10M CH20450_QPSK with 25 RB Size 0 RB Offset side 2 surface to phantom 10mm
DUT: AC785S-500;Type: WWAN Mobile Hotspot Portable Device;Serial: 014197000002053
Communication System: UID 0, Generic LTE (0);Frequency: 829 MHz;Duty Cycle: 1:1
Medium parameters used: f = 829 MHz; σ = 0.982 S/m; ε_r = 55.325; ρ = 1000 kg/m^3
Phantom section: Flat Section
Measurement Standard: DASY5 (IEEE/IEC/ANSI C63.19-2011)
DASY Configuration:

- Area Scan setting - Find Secondary Maximum Within:2.0dB and with a peak SAR value greater than 0.5 W/Kg
- Probe: EX3DV4 - SN3977;ConvF(9.74, 9.74, 9.74); Calibrated: 2014/2/17;
- Sensor-Surface: 2mm (Mechanical Surface Detection)
- Electronics: DAE4 Sn779;Calibrated: 2014/2/25
- Phantom: ELI v5.0;Type: QDOVA002AA;Serial: TP:1133
- Measurement SW: DASY52, Version 52.8 (7);SEMCAD X Version 14.6.10 (7164)

Flat/Area Scan (71x111x1):
Interpolated grid: dx=1.500 mm, dy=1.500 mm
Maximum value of SAR (interpolated) = 0.754 W/kg

Flat/Zoom Scan (5x5x7)/Cube 0:
Measurement grid: dx=8mm, dy=8mm, dz=5mm
Reference Value = 22.976 V/m; Power Drift = 0.02 dB
Peak SAR (extrapolated) = 0.870 W/kg
SAR(1 g) = 0.635 W/kg; SAR(10 g) = 0.452 W/kg
Maximum value of SAR (measured) = 0.765 W/kg

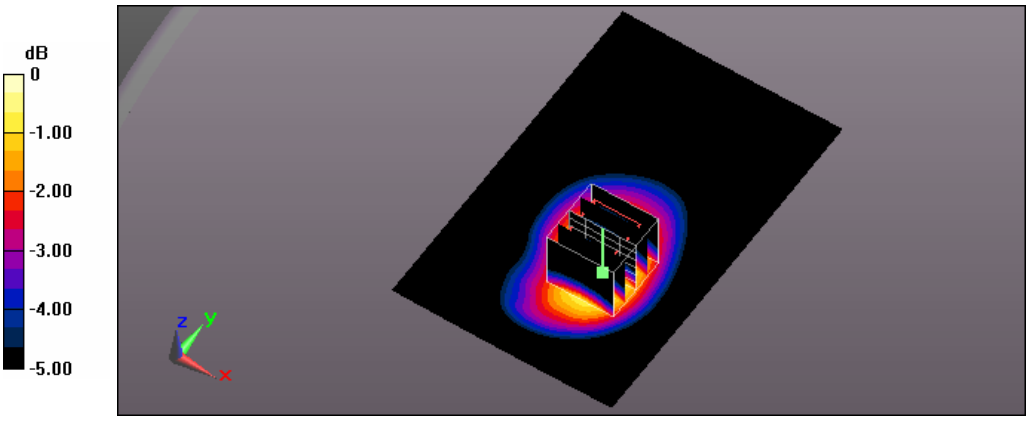

0 dB = 0.765 W/kg = -1.16 dBW/kg

Test Laboratory: A Test Lab Techno Corp.
Date: 2014/9/25Time: PM 10:10:59
73_Flat_LTE Band5 BW 10M CH20450_QPSK with 25 RB Size 0 RB Offset side 3 surface to phantom 10mm
DUT: AC785S-500;Type: WWAN Mobile Hotspot Portable Device;Serial: 014197000002053
Communication System: UID 0, Generic LTE (0);Frequency: 829 MHz;Duty Cycle: 1:1
Medium parameters used: f = 829 MHz; σ = 0.982 S/m; ε_r = 55.325; ρ = 1000 kg/m^3
Phantom section: Flat Section
Measurement Standard: DASY5 (IEEE/IEC/ANSI C63.19-2011)
DASY Configuration:

- Area Scan setting - Find Secondary Maximum Within:2.0dB and with a peak SAR value greater than 0.5 W/Kg
- Probe: EX3DV4 - SN3977;ConvF(9.74, 9.74, 9.74); Calibrated: 2014/2/17;
- Sensor-Surface: 2mm (Mechanical Surface Detection)
- Electronics: DAE4 Sn779;Calibrated: 2014/2/25
- Phantom: ELI v5.0;Type: QDOVA002AA;Serial: TP:1133
- Measurement SW: DASY52, Version 52.8 (7);SEMCAD X Version 14.6.10 (7164)

Flat/Area Scan (61x111x1):
Interpolated grid: dx=1.500 mm, dy=1.500 mm
Maximum value of SAR (interpolated) = 0.302 W/kg

Flat/Zoom Scan (5x5x7)/Cube 0:
Measurement grid: dx=8mm, dy=8mm, dz=5mm
Reference Value = 17.063 V/m; Power Drift = 0.03 dB
Peak SAR (extrapolated) = 0.342 W/kg
SAR(1 g) = 0.252 W/kg; SAR(10 g) = 0.180 W/kg
Maximum value of SAR (measured) = 0.303 W/kg

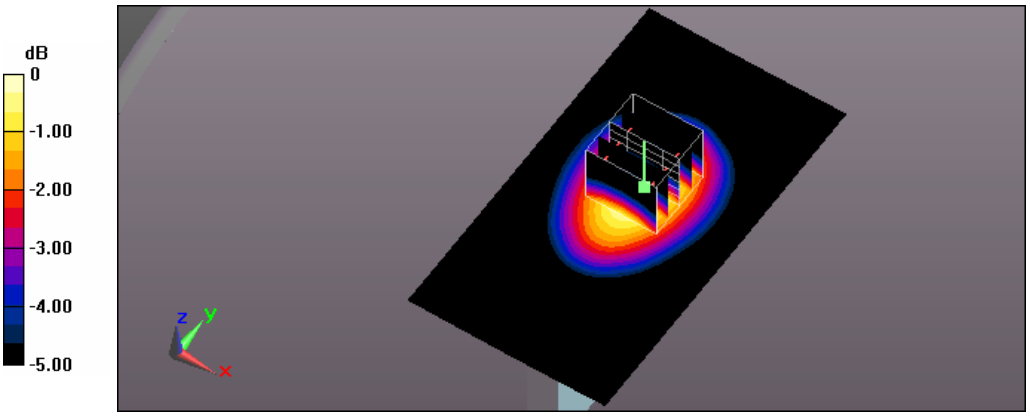

0 dB = 0.303 W/kg = -5.19 dBW/kg

Test Laboratory: A Test Lab Techno Corp.
Date: 2014/9/25Time: PM 11:04:25
74_Flat_LTE Band5 BW 10M CH20450_QPSK with 25 RB Size 0 RB Offset side 4 surface to phantom 10mm
DUT: AC785S-500;Type: WWAN Mobile Hotspot Portable Device;Serial: 014197000002053
Communication System: UID 0, Generic LTE (0);Frequency: 829 MHz;Duty Cycle: 1:1
Medium parameters used: f = 829 MHz; σ = 0.982 S/m; ε_r = 55.325; ρ = 1000 kg/m^3
Phantom section: Flat Section
Measurement Standard: DASY5 (IEEE/IEC/ANSI C63.19-2011)
DASY Configuration:

- Area Scan setting - Find Secondary Maximum Within:2.0dB and with a peak SAR value greater than 0.5 W/Kg
- Probe: EX3DV4 - SN3977;ConvF(9.74, 9.74, 9.74); Calibrated: 2014/2/17;
- Sensor-Surface: 2mm (Mechanical Surface Detection)
- Electronics: DAE4 Sn779;Calibrated: 2014/2/25
- Phantom: ELI v5.0;Type: QDOVA002AA;Serial: TP:1133
- Measurement SW: DASY52, Version 52.8 (7);SEMCAD X Version 14.6.10 (7164)

Flat/Area Scan (61x111x1):
Interpolated grid: dx=1.500 mm, dy=1.500 mm
Maximum value of SAR (interpolated) = 0.396 W/kg

Flat/Zoom Scan (5x5x7)/Cube 0:
Measurement grid: dx=8mm, dy=8mm, dz=5mm
Reference Value = 19.850 V/m; Power Drift = 0.03 dB
Peak SAR (extrapolated) = 0.453 W/kg
SAR(1 g) = 0.322 W/kg; SAR(10 g) = 0.221 W/kg
Maximum value of SAR (measured) = 0.395 W/kg

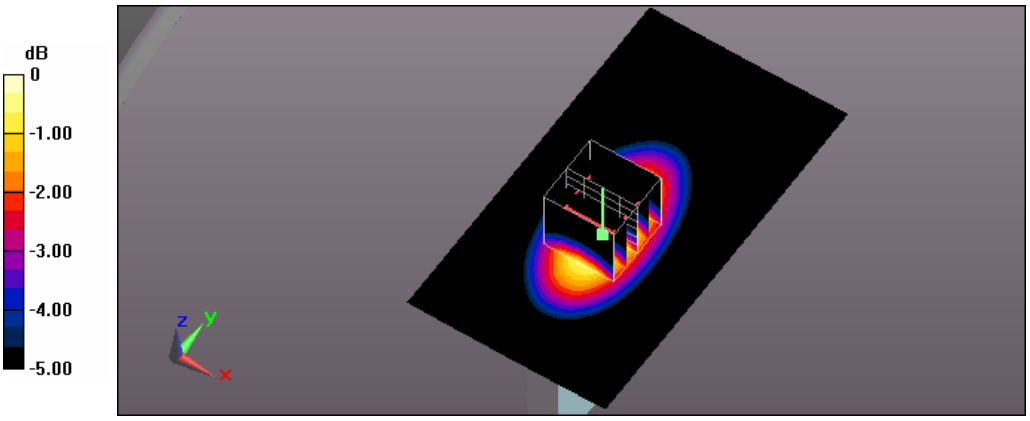

0 dB = 0.395 W/kg = -4.03 dBW/kg

Test Laboratory: A Test Lab Techno Corp.
Date: 2014/9/26Time: AM 12:10:22
75_Flat_LTE Band5 BW 10M CH20450_QPSK with 25 RB Size 0 RB Offset side 6 surface to phantom 10mm
DUT: AC785S-500;Type: WWAN Mobile Hotspot Portable Device;Serial: 014197000002053
Communication System: UID 0, Generic LTE (0);Frequency: 829 MHz;Duty Cycle: 1:1
Medium parameters used: f = 829 MHz; σ = 0.982 S/m; ε_r = 55.325; ρ = 1000 kg/m^3
Phantom section: Flat Section
Measurement Standard: DASY5 (IEEE/IEC/ANSI C63.19-2011)
DASY Configuration:

- Area Scan setting - Find Secondary Maximum Within:2.0dB and with a peak SAR value greater than 0.5 W/Kg
- Probe: EX3DV4 - SN3977;ConvF(9.74, 9.74, 9.74); Calibrated: 2014/2/17;
- Sensor-Surface: 2mm (Mechanical Surface Detection)
- Electronics: DAE4 Sn779;Calibrated: 2014/2/25
- Phantom: ELI v5.0;Type: QDOVA002AA;Serial: TP:1133
- Measurement SW: DASY52, Version 52.8 (7);SEMCAD X Version 14.6.10 (7164)

Flat/Area Scan (61x111x1):
Interpolated grid: dx=1.500 mm, dy=1.500 mm
Maximum value of SAR (interpolated) = 0.147 W/kg

Flat/Zoom Scan (5x5x7)/Cube 0:
Measurement grid: dx=8mm, dy=8mm, dz=5mm
Reference Value = 12.651 V/m; Power Drift = -0.01 dB
Peak SAR (extrapolated) = 0.184 W/kg
SAR(1 g) = 0.107 W/kg; SAR(10 g) = 0.062 W/kg
Maximum value of SAR (measured) = 0.149 W/kg

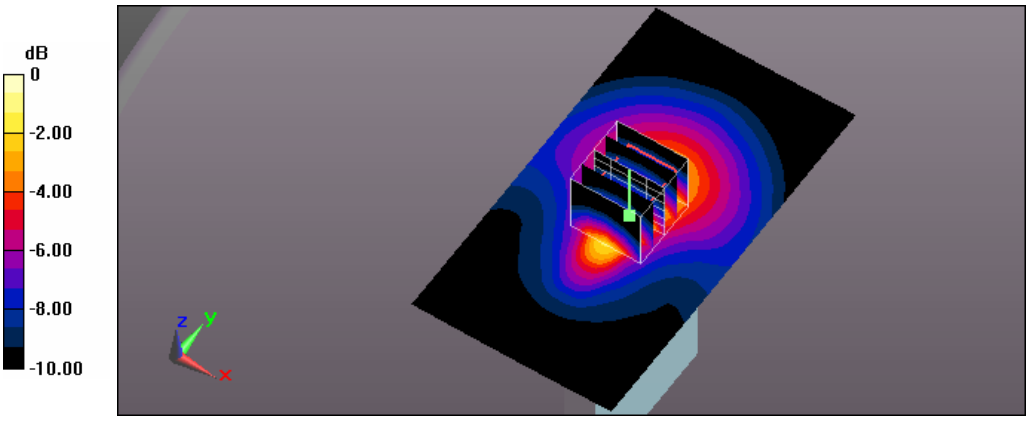

0 dB = 0.149 W/kg = -8.27 dBW/kg

Test Laboratory: A Test Lab Techno Corp.
Date: 2014/9/25Time: PM 06:28:30
70_Flat_LTE Band5 BW 10M CH20525_QPSK with 25 RB Size 0 RB Offset side 1 surface to phantom 10mm
DUT: AC785S-500;Type: WWAN Mobile Hotspot Portable Device;Serial: 014197000002053
Communication System: UID 0, Generic LTE (0);Frequency: 836.5 MHz;Duty Cycle: 1:1
Medium parameters used (interpolated): f = 836.5 MHz; σ = 0.992 S/m; ε_r = 55.304; ρ = 1000 kg/m^3
Phantom section: Flat Section
Measurement Standard: DASY5 (IEEE/IEC/ANSI C63.19-2011)
DASY Configuration:

- Area Scan setting - Find Secondary Maximum Within:2.0dB and with a peak SAR value greater than 0.5 W/Kg
- Probe: EX3DV4 - SN3977;ConvF(9.74, 9.74, 9.74); Calibrated: 2014/2/17;
- Sensor-Surface: 2mm (Mechanical Surface Detection)
- Electronics: DAE4 Sn779;Calibrated: 2014/2/25
- Phantom: ELI v5.0;Type: QDOVA002AA;Serial: TP:1133
- Measurement SW: DASY52, Version 52.8 (7);SEMCAD X Version 14.6.10 (7164)

Flat/Area Scan (71x111x1):
Interpolated grid: dx=1.500 mm, dy=1.500 mm
Maximum value of SAR (interpolated) = 0.829 W/kg

Flat/Zoom Scan (5x5x7)/Cube 0:
Measurement grid: dx=8mm, dy=8mm, dz=5mm
Reference Value = 23.261 V/m; Power Drift = -0.02 dB
Peak SAR (extrapolated) = 0.992 W/kg
SAR(1 g) = 0.677 W/kg; SAR(10 g) = 0.468 W/kg
Maximum value of SAR (measured) = 0.838 W/kg

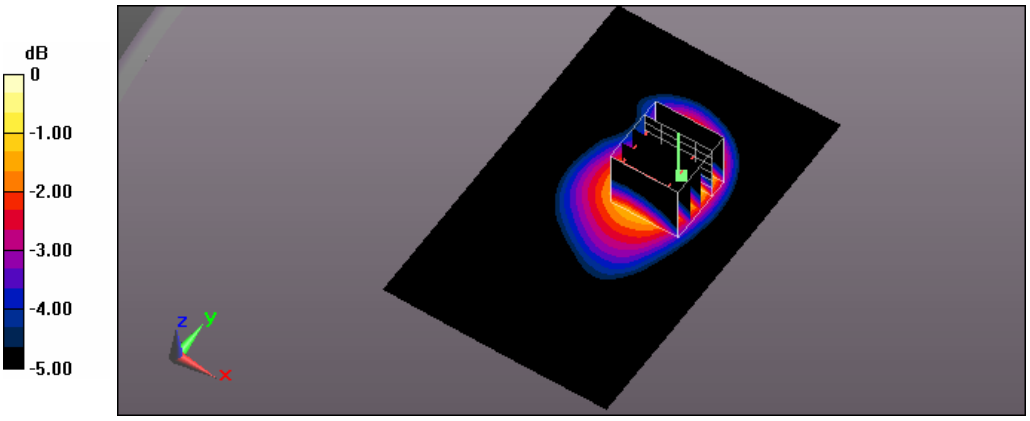

0 dB = 0.838 W/kg = -0.77 dBW/kg

Test Laboratory: A Test Lab Techno Corp.
Date: 2014/9/25Time: PM 06:49:10
71_Flat_LTE Band5 BW 10M CH20600_QPSK with 25 RB Size 0 RB Offset side 1 surface to phantom 10mm
DUT: AC785S-500;Type: WWAN Mobile Hotspot Portable Device;Serial: 014197000002053
Communication System: UID 0, Generic LTE (0);Frequency: 844 MHz;Duty Cycle: 1:1
Medium parameters used: f = 844 MHz; σ = 1.002 S/m; ε_r = 55.307; ρ = 1000 kg/m^3
Phantom section: Flat Section
Measurement Standard: DASY5 (IEEE/IEC/ANSI C63.19-2011)
DASY Configuration:

- Area Scan setting - Find Secondary Maximum Within:2.0dB and with a peak SAR value greater than 0.5 W/Kg
- Probe: EX3DV4 - SN3977;ConvF(9.74, 9.74, 9.74); Calibrated: 2014/2/17;
- Sensor-Surface: 2mm (Mechanical Surface Detection)
- Electronics: DAE4 Sn779;Calibrated: 2014/2/25
- Phantom: ELI v5.0;Type: QDOVA002AA;Serial: TP:1133
- Measurement SW: DASY52, Version 52.8 (7);SEMCAD X Version 14.6.10 (7164)

Flat/Area Scan (71x111x1):
Interpolated grid: dx=1.500 mm, dy=1.500 mm
Maximum value of SAR (interpolated) = 0.780 W/kg

Flat/Zoom Scan (5x5x7)/Cube 0:
Measurement grid: dx=8mm, dy=8mm, dz=5mm
Reference Value = 22.966 V/m; Power Drift = -0.02 dB
Peak SAR (extrapolated) = 0.933 W/kg
SAR(1 g) = 0.635 W/kg; SAR(10 g) = 0.441 W/kg
Maximum value of SAR (measured) = 0.789 W/kg

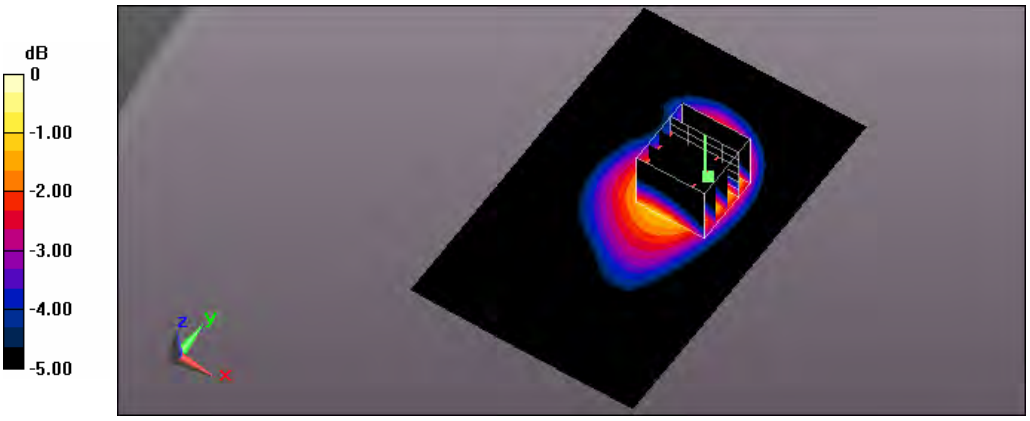

0 dB = 0.789 W/kg = -1.03 dBW/kg

Test Laboratory: A Test Lab Techno Corp.
Date: 2014/9/25Time: PM 07:09:25
76_Flat_LTE Band5 BW 10M CH20450_QPSK with 50 RB Size 0 RB Offset side 1 surface to phantom 10mm
DUT: AC785S-500;Type: WWAN Mobile Hotspot Portable Device;Serial: 014197000002053
Communication System: UID 0, Generic LTE (0);Frequency: 829 MHz;Duty Cycle: 1:1
Medium parameters used: f = 829 MHz; σ = 0.982 S/m; ε_r = 55.325; ρ = 1000 kg/m^3
Phantom section: Flat Section
Measurement Standard: DASY5 (IEEE/IEC/ANSI C63.19-2011)
DASY Configuration:

- Area Scan setting - Find Secondary Maximum Within:2.0dB and with a peak SAR value greater than 0.5 W/Kg
- Probe: EX3DV4 - SN3977;ConvF(9.74, 9.74, 9.74); Calibrated: 2014/2/17;
- Sensor-Surface: 2mm (Mechanical Surface Detection)
- Electronics: DAE4 Sn779;Calibrated: 2014/2/25
- Phantom: ELI v5.0;Type: QDOVA002AA;Serial: TP:1133
- Measurement SW: DASY52, Version 52.8 (7);SEMCAD X Version 14.6.10 (7164)

Flat/Area Scan (71x111x1):
Interpolated grid: dx=1.500 mm, dy=1.500 mm
Maximum value of SAR (interpolated) = 0.916 W/kg

Flat/Zoom Scan (5x5x7)/Cube 0:
Measurement grid: dx=8mm, dy=8mm, dz=5mm
Reference Value = 23.633 V/m; Power Drift = -0.03 dB
Peak SAR (extrapolated) = 1.08 W/kg
SAR(1 g) = 0.732 W/kg; SAR(10 g) = 0.501 W/kg
Maximum value of SAR (measured) = 0.912 W/kg

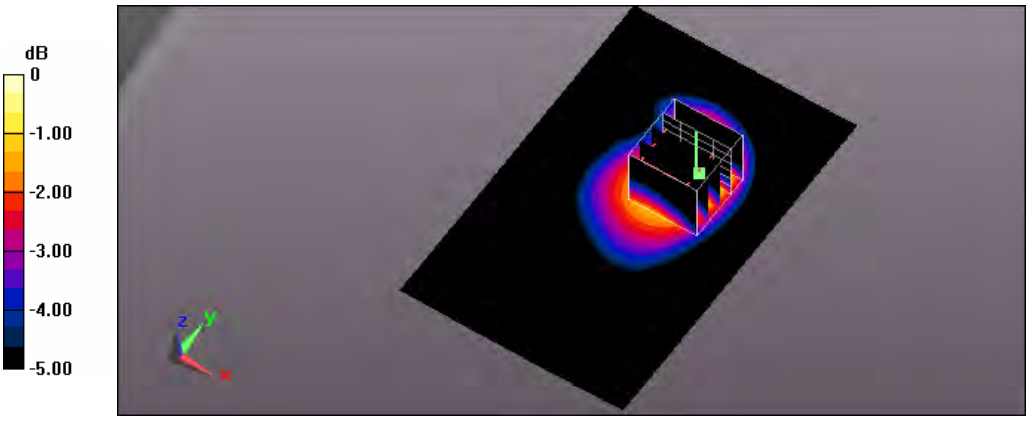

0 dB = 0.912 W/kg = -0.40 dBW/kg

Test Laboratory: A Test Lab Techno Corp.
Date: 2014/9/26Time: AM 01:14:15
194_Flat_LTE Band5 BW 10M CH20450_QPSK with 50 RB Size 0 RB Offset side 2 surface to phantom 10mm
DUT: AC785S-500;Type: WWAN Mobile Hotspot Portable Device;Serial: 014197000002053
Communication System: UID 0, Generic LTE (0);Frequency: 829 MHz;Duty Cycle: 1:1
Medium parameters used: f = 829 MHz; σ = 0.982 S/m; ε_r = 55.325; ρ = 1000 kg/m^3
Phantom section: Flat Section
Measurement Standard: DASY5 (IEEE/IEC/ANSI C63.19-2011)
DASY Configuration:

- Area Scan setting - Find Secondary Maximum Within:2.0dB and with a peak SAR value greater than 0.5 W/Kg
- Probe: EX3DV4 - SN3977;ConvF(9.74, 9.74, 9.74); Calibrated: 2014/2/17;
- Sensor-Surface: 2mm (Mechanical Surface Detection)
- Electronics: DAE4 Sn779;Calibrated: 2014/2/25
- Phantom: ELI v5.0;Type: QDOVA002AA;Serial: TP:1133
- Measurement SW: DASY52, Version 52.8 (7);SEMCAD X Version 14.6.10 (7164)

Flat/Area Scan (71x111x1):
Interpolated grid: dx=1.500 mm, dy=1.500 mm
Maximum value of SAR (interpolated) = 0.803 W/kg

Flat/Zoom Scan (5x5x7)/Cube 0:
Measurement grid: dx=8mm, dy=8mm, dz=5mm
Reference Value = 24.150 V/m; Power Drift = 0.02 dB
Peak SAR (extrapolated) = 0.910 W/kg
SAR(1 g) = 0.674 W/kg; SAR(10 g) = 0.482 W/kg
Maximum value of SAR (measured) = 0.796 W/kg

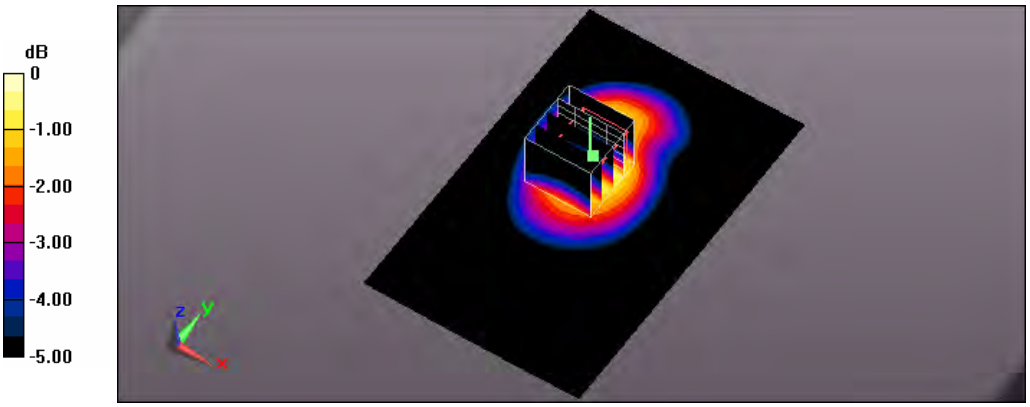

0 dB = 0.796 W/kg = -0.99 dBW/kg

Test Laboratory: A Test Lab Techno Corp.
Date: 2014/11/13Time: AM 10:18:28
92_Flat_LTE Band7 BW 20M CH20850_QPSK with 1 RB Size 0 RB Offset side 1 surface to phantom 10mm
DUT: AC785S-500;Type: WWAN Mobile Hotspot Portable Device;Serial: 014197000002053
Communication System: UID 0, Generic LTE (0);Frequency: 2510 MHz;Duty Cycle: 1:1
Medium parameters used: f = 2510 MHz; σ = 2.117 S/m; ε_r = 51.579; ρ = 1000 kg/m^3
Phantom section: Flat Section
Measurement Standard: DASY5 (IEEE/IEC/ANSI C63.19-2011)
DASY Configuration:

- Area Scan setting - Find Secondary Maximum Within:2.0dB and with a peak SAR value greater than 0.5 W/Kg
- Probe: EX3DV4 - SN3977;ConvF(6.68, 6.68, 6.68); Calibrated: 2014/2/17;
- Sensor-Surface: 2mm (Mechanical Surface Detection)
- Electronics: DAE4 Sn779;Calibrated: 2014/2/25
- Phantom: ELI v5.0;Type: QDOVA002AA;Serial: TP:1133
- Measurement SW: DASY52, Version 52.8 (7);SEMCAD X Version 14.6.10 (7164)

Flat/Area Scan (101x161x1):
Interpolated grid: dx=1.000 mm, dy=1.000 mm
Maximum value of SAR (interpolated) = 1.35 W/kg

Flat/Zoom Scan (7x7x7)/Cube 0:
Measurement grid: dx=5mm, dy=5mm, dz=5mm
Reference Value = 10.481 V/m; Power Drift = -0.05 dB
Peak SAR (extrapolated) = 1.77 W/kg
SAR(1 g) = 0.873 W/kg; SAR(10 g) = 0.461 W/kg
Maximum value of SAR (measured) = 1.28 W/kg

Flat/Zoom Scan (7x7x7)/Cube 1:
Measurement grid: dx=5mm, dy=5mm, dz=5mm
Reference Value = 10.481 V/m; Power Drift = -0.05 dB
Peak SAR (extrapolated) = 1.40 W/kg
SAR(1 g) = 0.698 W/kg; SAR(10 g) = 0.346 W/kg
Maximum value of SAR (measured) = 1.03 W/kg

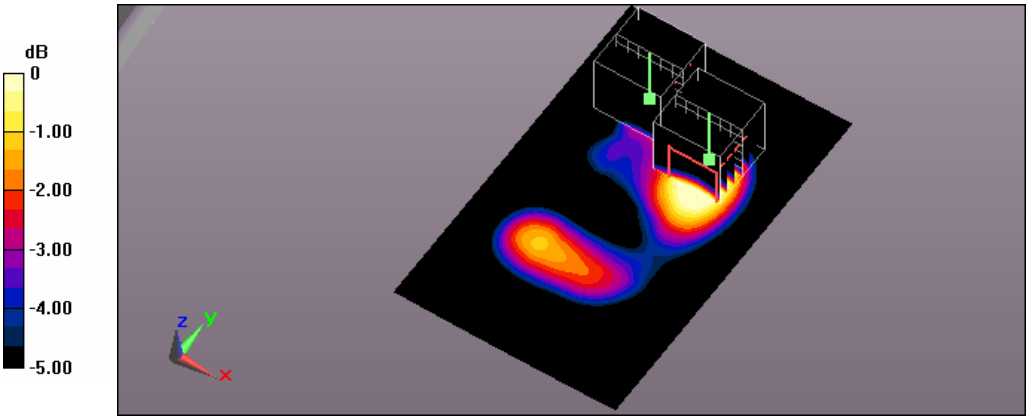

0 dB = 1.03 W/kg = 0.13 dBW/kg

Test Laboratory: A Test Lab Techno Corp.
Date: 2014/11/13Time: PM 01:14:24
95_Flat_LTE Band7 BW 20M CH20850_QPSK with 1 RB Size 0 RB Offset side 2 surface to phantom 10mm
DUT: AC785S-500;Type: WWAN Mobile Hotspot Portable Device;Serial: 014197000002053
Communication System: UID 0, Generic LTE (0);Frequency: 2510 MHz;Duty Cycle: 1:1
Medium parameters used: f = 2510 MHz; σ = 2.117 S/m; ε_r = 51.579; ρ = 1000 kg/m^3
Phantom section: Flat Section
Measurement Standard: DASY5 (IEEE/IEC/ANSI C63.19-2011)
DASY Configuration:

- Area Scan setting - Find Secondary Maximum Within:2.0dB and with a peak SAR value greater than 0.5 W/Kg
- Probe: EX3DV4 - SN3977;ConvF(6.68, 6.68, 6.68); Calibrated: 2014/2/17;
- Sensor-Surface: 2mm (Mechanical Surface Detection)
- Electronics: DAE4 Sn779;Calibrated: 2014/2/25
- Phantom: ELI v5.0;Type: QDOVA002AA;Serial: TP:1133
- Measurement SW: DASY52, Version 52.8 (7);SEMCAD X Version 14.6.10 (7164)

Flat/Area Scan (101x161x1):
Interpolated grid: dx=1.000 mm, dy=1.000 mm
Maximum value of SAR (interpolated) = 1.23 W/kg

Flat/Zoom Scan (7x7x7)/Cube 0:
Measurement grid: dx=5mm, dy=5mm, dz=5mm
Reference Value = 14.182 V/m; Power Drift = -0.15 dB
Peak SAR (extrapolated) = 1.63 W/kg
SAR(1 g) = 0.844 W/kg; SAR(10 g) = 0.454 W/kg
Maximum value of SAR (measured) = 1.21 W/kg

Flat/Zoom Scan (7x7x7)/Cube 1:
Measurement grid: dx=5mm, dy=5mm, dz=5mm
Reference Value = 14.182 V/m; Power Drift = -0.15 dB
Peak SAR (extrapolated) = 1.30 W/kg
SAR(1 g) = 0.701 W/kg; SAR(10 g) = 0.396 W/kg
Maximum value of SAR (measured) = 0.969 W/kg

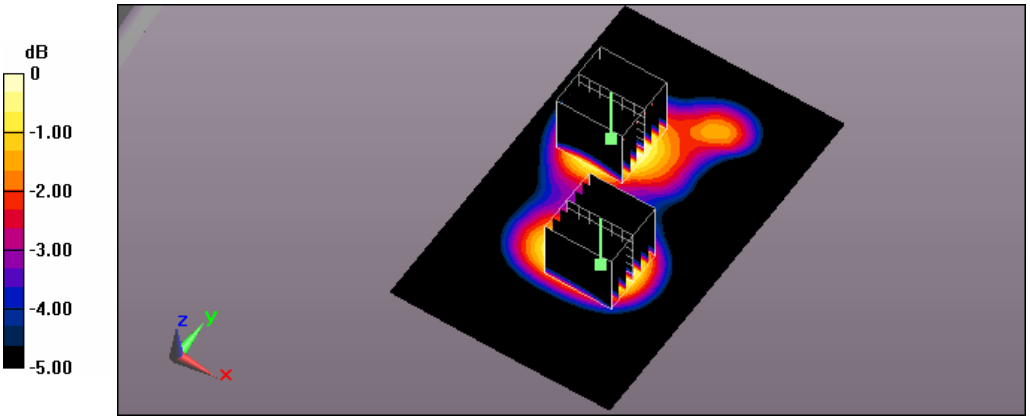

0 dB = 0.969 W/kg = -0.14 dBW/kg

Test Laboratory: A Test Lab Techno Corp.
Date: 2014/11/13Time: PM 08:02:43
98_Flat_LTE Band7 BW 20M CH20850_QPSK with 1 RB Size 0 RB Offset side 3 surface to phantom 10mm
DUT: AC785S-500;Type: WWAN Mobile Hotspot Portable Device;Serial: 014197000002053
Communication System: UID 0, Generic LTE (0);Frequency: 2510 MHz;Duty Cycle: 1:1
Medium parameters used: f = 2510 MHz; σ = 2.117 S/m; ε_r = 51.579; ρ = 1000 kg/m^3
Phantom section: Flat Section
Measurement Standard: DASY5 (IEEE/IEC/ANSI C63.19-2011)
DASY Configuration:

- Area Scan setting - Find Secondary Maximum Within:2.0dB and with a peak SAR value greater than 0.5 W/Kg
- Probe: EX3DV4 - SN3977;ConvF(6.68, 6.68, 6.68); Calibrated: 2014/2/17;
- Sensor-Surface: 2mm (Mechanical Surface Detection)
- Electronics: DAE4 Sn779;Calibrated: 2014/2/25
- Phantom: ELI v5.0;Type: QDOVA002AA;Serial: TP:1133
- Measurement SW: DASY52, Version 52.8 (7);SEMCAD X Version 14.6.10 (7164)

Flat/Area Scan (91x161x1):
Interpolated grid: dx=1.000 mm, dy=1.000 mm
Maximum value of SAR (interpolated) = 0.777 W/kg

Flat/Zoom Scan (7x7x7)/Cube 0:
Measurement grid: dx=5mm, dy=5mm, dz=5mm
Reference Value = 8.112 V/m; Power Drift = 0.08 dB
Peak SAR (extrapolated) = 1.02 W/kg
SAR(1 g) = 0.513 W/kg; SAR(10 g) = 0.257 W/kg
Maximum value of SAR (measured) = 0.761 W/kg

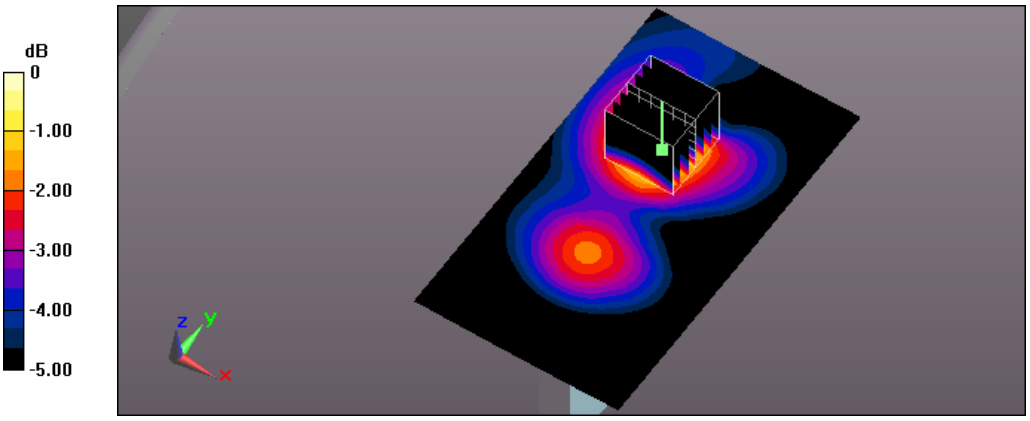

0 dB = 0.761 W/kg = -1.19 dBW/kg

Test Laboratory: A Test Lab Techno Corp.
Date: 2014/11/13Time: PM 08:37:31
99_Flat_LTE Band7 BW 20M CH20850_QPSK with 1 RB Size 0 RB Offset side 4 surface to phantom 10mm
DUT: AC785S-500;Type: WWAN Mobile Hotspot Portable Device;Serial: 014197000002053
Communication System: UID 0, Generic LTE (0);Frequency: 2510 MHz;Duty Cycle: 1:1
Medium parameters used: f = 2510 MHz; σ = 2.117 S/m; ε_r = 51.579; ρ = 1000 kg/m^3
Phantom section: Flat Section
Measurement Standard: DASY5 (IEEE/IEC/ANSI C63.19-2011)
DASY Configuration:

- Area Scan setting - Find Secondary Maximum Within:2.0dB and with a peak SAR value greater than 0.5 W/Kg
- Probe: EX3DV4 - SN3977;ConvF(6.68, 6.68, 6.68); Calibrated: 2014/2/17;
- Sensor-Surface: 2mm (Mechanical Surface Detection)
- Electronics: DAE4 Sn779;Calibrated: 2014/2/25
- Phantom: ELI v5.0;Type: QDOVA002AA;Serial: TP:1133
- Measurement SW: DASY52, Version 52.8 (7);SEMCAD X Version 14.6.10 (7164)

Flat/Area Scan (91x161x1):
Interpolated grid: dx=1.000 mm, dy=1.000 mm
Maximum value of SAR (interpolated) = 0.627 W/kg

Flat/Zoom Scan (7x7x7)/Cube 0:
Measurement grid: dx=5mm, dy=5mm, dz=5mm
Reference Value = 15.848 V/m; Power Drift = 0.01 dB
Peak SAR (extrapolated) = 0.863 W/kg
SAR(1 g) = 0.447 W/kg; SAR(10 g) = 0.241 W/kg
Maximum value of SAR (measured) = 0.641 W/kg

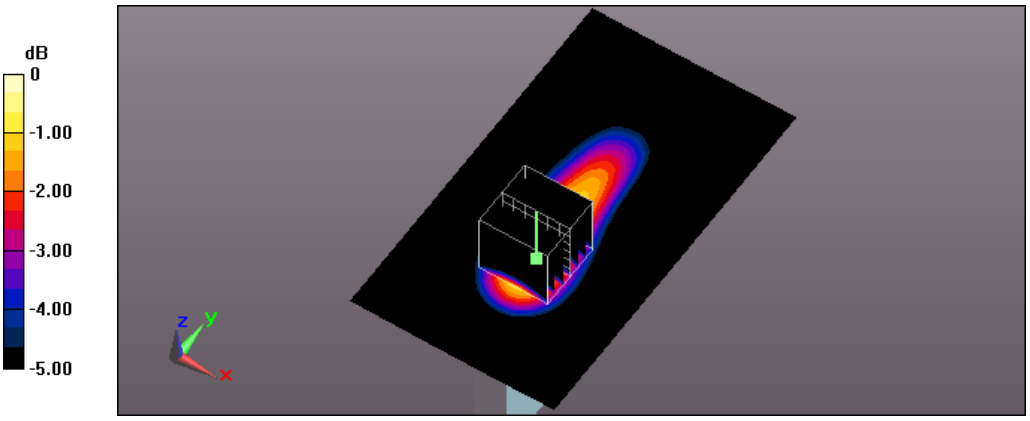

0 dB = 0.641 W/kg = -1.93 dBW/kg

Test Laboratory: A Test Lab Techno Corp.
Date: 2014/11/14Time: AM 01:57:47
100_Flat_LTE Band7 BW 20M CH20850_QPSK with 1 RB Size 0 RB Offset side 6 surface to phantom 10mm
DUT: AC785S-500;Type: WWAN Mobile Hotspot Portable Device;Serial: 014197000002053
Communication System: UID 0, Generic LTE (0);Frequency: 2510 MHz;Duty Cycle: 1:1
Medium parameters used: f = 2510 MHz; σ = 2.117 S/m; ε_r = 51.579; ρ = 1000 kg/m^3
Phantom section: Flat Section
Measurement Standard: DASY5 (IEEE/IEC/ANSI C63.19-2011)
DASY Configuration:

- Area Scan setting - Find Secondary Maximum Within:2.0dB and with a peak SAR value greater than 0.5 W/Kg
- Probe: EX3DV4 - SN3977;ConvF(6.68, 6.68, 6.68); Calibrated: 2014/2/17;
- Sensor-Surface: 2mm (Mechanical Surface Detection)
- Electronics: DAE4 Sn779;Calibrated: 2014/2/25
- Phantom: ELI v5.0;Type: QDOVA002AA;Serial: TP:1133
- Measurement SW: DASY52, Version 52.8 (7);SEMCAD X Version 14.6.10 (7164)

Flat/Area Scan (101x161x1):
Interpolated grid: dx=1.000 mm, dy=1.000 mm
Maximum value of SAR (interpolated) = 2.22 W/kg

Flat/Zoom Scan (7x7x7)/Cube 0:
Measurement grid: dx=5mm, dy=5mm, dz=5mm
Reference Value = 22.400 V/m; Power Drift = -0.08 dB
Peak SAR (extrapolated) = 2.97 W/kg
SAR(1 g) = 1.39 W/kg; SAR(10 g) = 0.640 W/kg
Maximum value of SAR (measured) = 2.15 W/kg

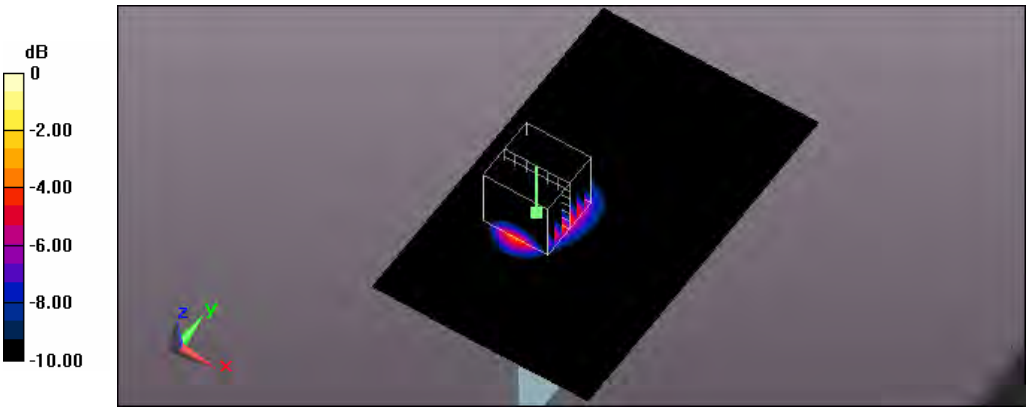

0 dB = 2.15 W/kg = 3.32 dBW/kg

Test Laboratory: A Test Lab Techno Corp.
Date: 2014/11/13Time: AM 01:16:20
93_Flat_LTE Band7 BW 20M CH21100_QPSK with 1 RB Size 0 RB Offset side 1 surface to phantom 10mm
DUT: AC785S-500;Type: WWAN Mobile Hotspot Portable Device;Serial: 014197000002053
Communication System: UID 0, Generic LTE (0);Frequency: 2535 MHz;Duty Cycle: 1:1
Medium parameters used: f = 2535 MHz; σ = 2.147 S/m; ε_r = 51.527; ρ = 1000 kg/m^3
Phantom section: Flat Section
Measurement Standard: DASY5 (IEEE/IEC/ANSI C63.19-2011)
DASY Configuration:

- Area Scan setting - Find Secondary Maximum Within:2.0dB and with a peak SAR value greater than 0.5 W/Kg
- Probe: EX3DV4 - SN3977;ConvF(6.68, 6.68, 6.68); Calibrated: 2014/2/17;
- Sensor-Surface: 2mm (Mechanical Surface Detection)
- Electronics: DAE4 Sn779;Calibrated: 2014/2/25
- Phantom: ELI v5.0;Type: QDOVA002AA;Serial: TP:1133
- Measurement SW: DASY52, Version 52.8 (7);SEMCAD X Version 14.6.10 (7164)

Flat/Area Scan (101x161x1):
Interpolated grid: dx=1.000 mm, dy=1.000 mm
Maximum value of SAR (interpolated) = 1.24 W/kg

Flat/Zoom Scan (7x7x7)/Cube 0:
Measurement grid: dx=5mm, dy=5mm, dz=5mm
Reference Value = 10.461 V/m; Power Drift = -0.09 dB
Peak SAR (extrapolated) = 1.54 W/kg
SAR(1 g) = 0.801 W/kg; SAR(10 g) = 0.423 W/kg
Maximum value of SAR (measured) = 1.15 W/kg

Flat/Zoom Scan (7x7x7)/Cube 1:
Measurement grid: dx=5mm, dy=5mm, dz=5mm
Reference Value = 10.461 V/m; Power Drift = -0.09 dB
Peak SAR (extrapolated) = 1.26 W/kg
SAR(1 g) = 0.611 W/kg; SAR(10 g) = 0.296 W/kg
Maximum value of SAR (measured) = 0.922 W/kg

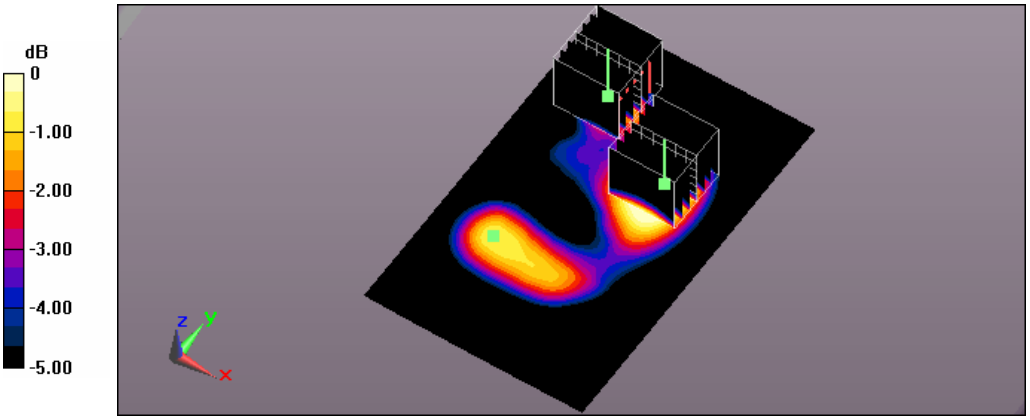

0 dB = 0.922 W/kg = -0.35 dBW/kg

Test Laboratory: A Test Lab Techno Corp.
Date: 2014/11/13Time: PM 03:54:33
96_Flat_LTE Band7 BW 20M CH21100_QPSK with 1 RB Size 0 RB Offset side 2 surface to phantom 10mm
DUT: AC785S-500;Type: WWAN Mobile Hotspot Portable Device;Serial: 014197000002053
Communication System: UID 0, Generic LTE (0);Frequency: 2535 MHz;Duty Cycle: 1:1
Medium parameters used: f = 2535 MHz; σ = 2.147 S/m; ε_r = 51.527; ρ = 1000 kg/m^3
Phantom section: Flat Section
Measurement Standard: DASY5 (IEEE/IEC/ANSI C63.19-2011)
DASY Configuration:

- Area Scan setting - Find Secondary Maximum Within:2.0dB and with a peak SAR value greater than 0.5 W/Kg
- Probe: EX3DV4 - SN3977;ConvF(6.68, 6.68, 6.68); Calibrated: 2014/2/17;
- Sensor-Surface: 2mm (Mechanical Surface Detection)
- Electronics: DAE4 Sn779;Calibrated: 2014/2/25
- Phantom: ELI v5.0;Type: QDOVA002AA;Serial: TP:1133
- Measurement SW: DASY52, Version 52.8 (7);SEMCAD X Version 14.6.10 (7164)

Flat/Area Scan (101x161x1):
Interpolated grid: dx=1.000 mm, dy=1.000 mm
Maximum value of SAR (interpolated) = 1.31 W/kg

Flat/Zoom Scan (7x7x7)/Cube 0:
Measurement grid: dx=5mm, dy=5mm, dz=5mm
Reference Value = 13.214 V/m; Power Drift = -0.08 dB
Peak SAR (extrapolated) = 1.63 W/kg
SAR(1 g) = 0.853 W/kg; SAR(10 g) = 0.461 W/kg
Maximum value of SAR (measured) = 1.22 W/kg

Flat/Zoom Scan (7x7x7)/Cube 1:
Measurement grid: dx=5mm, dy=5mm, dz=5mm
Reference Value = 13.214 V/m; Power Drift = -0.08 dB
Peak SAR (extrapolated) = 1.23 W/kg
SAR(1 g) = 0.669 W/kg; SAR(10 g) = 0.372 W/kg
Maximum value of SAR (measured) = 0.936 W/kg

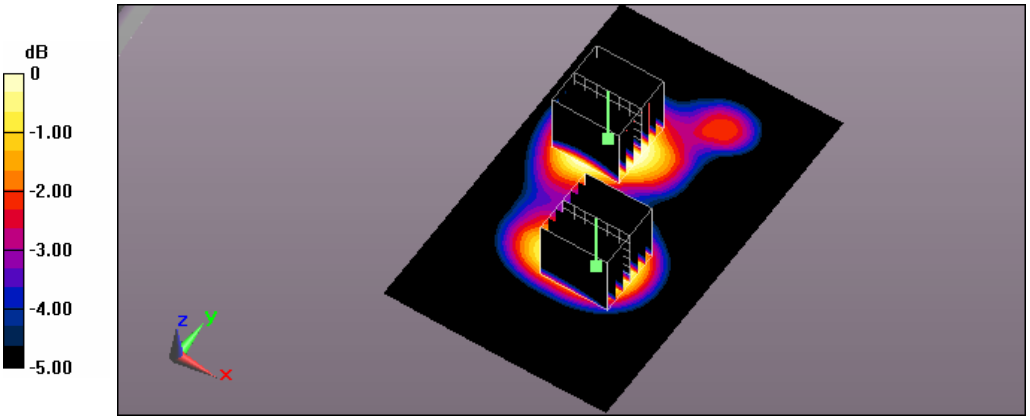

0 dB = 0.936 W/kg = -0.29 dBW/kg

Test Laboratory: A Test Lab Techno Corp.
Date: 2014/11/14Time: PM 08:06:07
101_Flat_LTE Band7 BW 20M CH21100_QPSK with 1 RB Size 0 RB Offset side 6 surface to phantom 10mm
DUT: AC785S-500;Type: WWAN Mobile Hotspot Portable Device;Serial: 014197000002053
Communication System: UID 0, Generic LTE (0);Frequency: 2535 MHz;Duty Cycle: 1:1
Medium parameters used: f = 2535 MHz; σ = 2.147 S/m; ε_r = 51.527; ρ = 1000 kg/m^3
Phantom section: Flat Section
Measurement Standard: DASY5 (IEEE/IEC/ANSI C63.19-2011)
DASY Configuration:

- Area Scan setting - Find Secondary Maximum Within:2.0dB and with a peak SAR value greater than 0.5 W/Kg
- Probe: EX3DV4 - SN3977;ConvF(6.68, 6.68, 6.68); Calibrated: 2014/2/17;
- Sensor-Surface: 2mm (Mechanical Surface Detection)
- Electronics: DAE4 Sn779;Calibrated: 2014/2/25
- Phantom: ELI v5.0;Type: QDOVA002AA;Serial: TP:1133
- Measurement SW: DASY52, Version 52.8 (7);SEMCAD X Version 14.6.10 (7164)

Flat/Area Scan (101x161x1):
Interpolated grid: dx=1.000 mm, dy=1.000 mm
Maximum value of SAR (interpolated) = 1.84 W/kg

Flat/Zoom Scan (7x7x7)/Cube 0:
Measurement grid: dx=5mm, dy=5mm, dz=5mm
Reference Value = 22.646 V/m; Power Drift = -0.02 dB
Peak SAR (extrapolated) = 2.42 W/kg
SAR(1 g) = 1.13 W/kg; SAR(10 g) = 0.521 W/kg
Maximum value of SAR (measured) = 1.74 W/kg

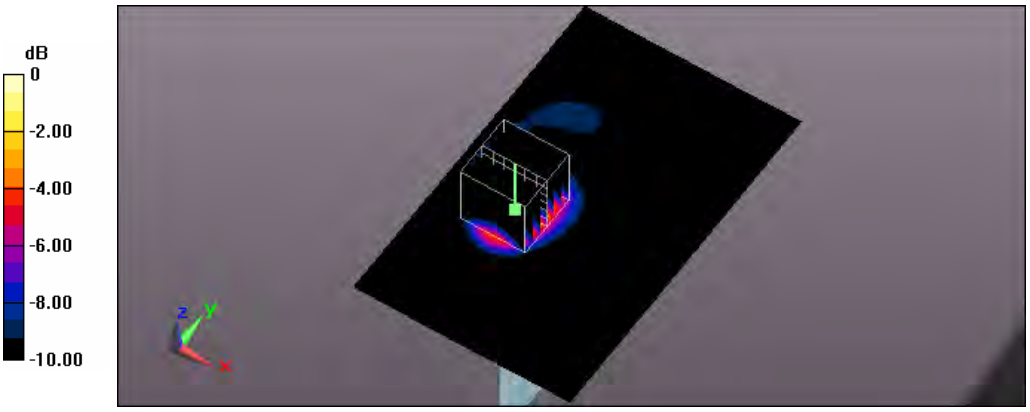

0 dB = 1.74 W/kg = 2.41 dBW/kg

Test Laboratory: A Test Lab Techno Corp.
Date: 2014/11/13Time: AM 11:16:22
94_Flat_LTE Band7 BW 20M CH21350_QPSK with 1 RB Size 0 RB Offset side 1 surface to phantom 10mm
DUT: AC785S-500;Type: WWAN Mobile Hotspot Portable Device;Serial: 014197000002053
Communication System: UID 0, Generic LTE (0);Frequency: 2560 MHz;Duty Cycle: 1:1
Medium parameters used: f = 2560 MHz; σ = 2.178 S/m; ε_r = 51.471; ρ = 1000 kg/m^3
Phantom section: Flat Section
Measurement Standard: DASY5 (IEEE/IEC/ANSI C63.19-2011)
DASY Configuration:

- Area Scan setting - Find Secondary Maximum Within:2.0dB and with a peak SAR value greater than 0.5 W/Kg
- Probe: EX3DV4 - SN3977;ConvF(6.68, 6.68, 6.68); Calibrated: 2014/2/17;
- Sensor-Surface: 2mm (Mechanical Surface Detection)
- Electronics: DAE4 Sn779;Calibrated: 2014/2/25
- Phantom: ELI v5.0;Type: QDOVA002AA;Serial: TP:1133
- Measurement SW: DASY52, Version 52.8 (7);SEMCAD X Version 14.6.10 (7164)

Flat/Area Scan (101x161x1):
Interpolated grid: dx=1.000 mm, dy=1.000 mm
Maximum value of SAR (interpolated) = 1.10 W/kg

Flat/Zoom Scan (7x7x7)/Cube 0:
Measurement grid: dx=5mm, dy=5mm, dz=5mm
Reference Value = 9.621 V/m; Power Drift = -0.11 dB
Peak SAR (extrapolated) = 1.41 W/kg
SAR(1 g) = 0.706 W/kg; SAR(10 g) = 0.359 W/kg
Maximum value of SAR (measured) = 1.03 W/kg

Flat/Zoom Scan (7x7x7)/Cube 1:
Measurement grid: dx=5mm, dy=5mm, dz=5mm
Reference Value = 9.621 V/m; Power Drift = -0.11 dB
Peak SAR (extrapolated) = 1.13 W/kg
SAR(1 g) = 0.539 W/kg; SAR(10 g) = 0.257 W/kg
Maximum value of SAR (measured) = 0.814 W/kg

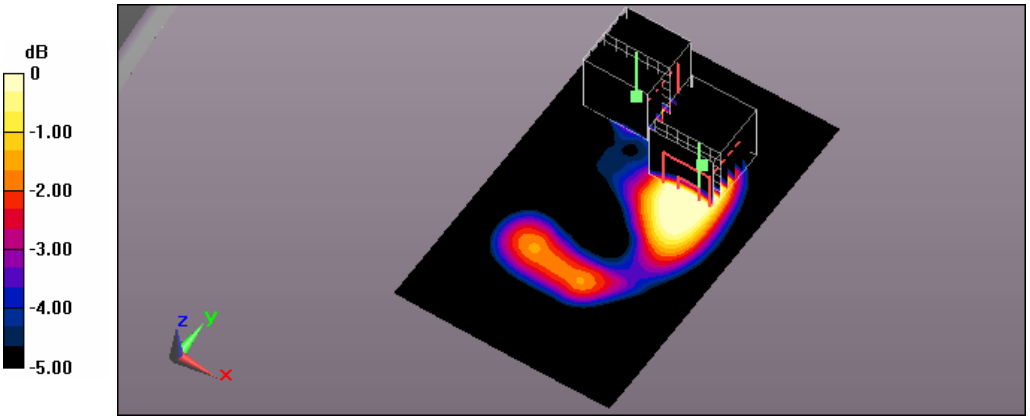

0 dB = 0.814 W/kg = -0.89 dBW/kg

Test Laboratory: A Test Lab Techno Corp.
Date: 2014/11/13Time: PM 04:50:45
97_Flat_LTE Band7 BW 20M CH21350_QPSK with 1 RB Size 0 RB Offset side 2 surface to phantom 10mm
DUT: AC785S-500;Type: WWAN Mobile Hotspot Portable Device;Serial: 014197000002053
Communication System: UID 0, Generic LTE (0);Frequency: 2560 MHz;Duty Cycle: 1:1
Medium parameters used: f = 2560 MHz; σ = 2.178 S/m; ε_r = 51.471; ρ = 1000 kg/m^3
Phantom section: Flat Section
Measurement Standard: DASY5 (IEEE/IEC/ANSI C63.19-2011)
DASY Configuration:

- Area Scan setting - Find Secondary Maximum Within:2.0dB and with a peak SAR value greater than 0.5 W/Kg
- Probe: EX3DV4 - SN3977;ConvF(6.68, 6.68, 6.68); Calibrated: 2014/2/17;
- Sensor-Surface: 2mm (Mechanical Surface Detection)
- Electronics: DAE4 Sn779;Calibrated: 2014/2/25
- Phantom: ELI v5.0;Type: QDOVA002AA;Serial: TP:1133
- Measurement SW: DASY52, Version 52.8 (7);SEMCAD X Version 14.6.10 (7164)

Flat/Area Scan (101x161x1):
Interpolated grid: dx=1.000 mm, dy=1.000 mm
Maximum value of SAR (interpolated) = 1.14 W/kg

Flat/Zoom Scan (7x7x7)/Cube 0:
Measurement grid: dx=5mm, dy=5mm, dz=5mm
Reference Value = 12.497 V/m; Power Drift = 0.06 dB
Peak SAR (extrapolated) = 1.51 W/kg
SAR(1 g) = 0.790 W/kg; SAR(10 g) = 0.428 W/kg
Maximum value of SAR (measured) = 1.12 W/kg

Flat/Zoom Scan (7x7x7)/Cube 1:
Measurement grid: dx=5mm, dy=5mm, dz=5mm
Reference Value = 12.497 V/m; Power Drift = 0.06 dB
Peak SAR (extrapolated) = 1.13 W/kg
SAR(1 g) = 0.600 W/kg; SAR(10 g) = 0.330 W/kg
Maximum value of SAR (measured) = 0.845 W/kg

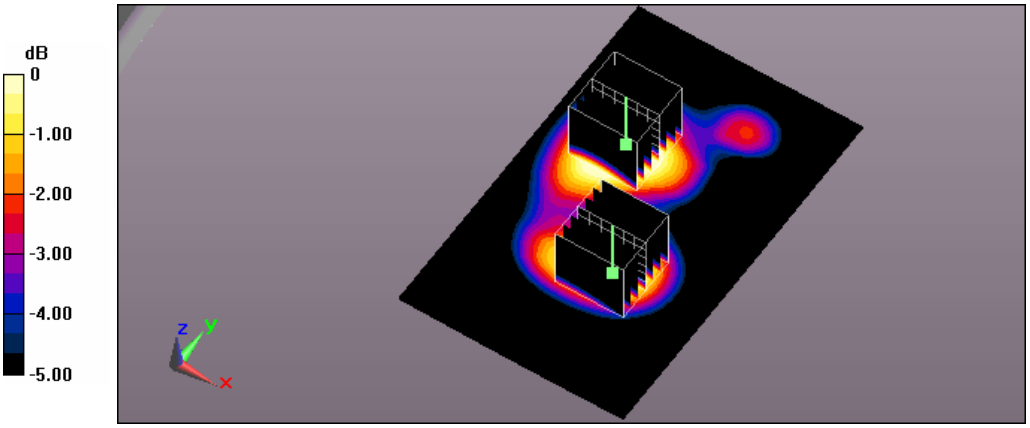

0 dB = 0.845 W/kg = -0.73 dBW/kg

Test Laboratory: A Test Lab Techno Corp.
Date: 2014/11/14Time: PM 08:48:34
102_Flat_LTE Band7 BW 20M CH21350_QPSK with 1 RB Size 0 RB Offset side 6 surface to phantom 10mm
DUT: AC785S-500;Type: WWAN Mobile Hotspot Portable Device;Serial: 014197000002053
Communication System: UID 0, Generic LTE (0);Frequency: 2560 MHz;Duty Cycle: 1:1
Medium parameters used: f = 2560 MHz; σ = 2.178 S/m; ε_r = 51.471; ρ = 1000 kg/m^3
Phantom section: Flat Section
Measurement Standard: DASY5 (IEEE/IEC/ANSI C63.19-2011)
DASY Configuration:

- Area Scan setting - Find Secondary Maximum Within:2.0dB and with a peak SAR value greater than 0.5 W/Kg
- Probe: EX3DV4 - SN3977;ConvF(6.68, 6.68, 6.68); Calibrated: 2014/2/17;
- Sensor-Surface: 2mm (Mechanical Surface Detection)
- Electronics: DAE4 Sn779;Calibrated: 2014/2/25
- Phantom: ELI v5.0;Type: QDOVA002AA;Serial: TP:1133
- Measurement SW: DASY52, Version 52.8 (7);SEMCAD X Version 14.6.10 (7164)

Flat/Area Scan (101x161x1):
Interpolated grid: dx=1.000 mm, dy=1.000 mm
Maximum value of SAR (interpolated) = 1.82 W/kg

Flat/Zoom Scan (7x7x7)/Cube 0:
Measurement grid: dx=5mm, dy=5mm, dz=5mm
Reference Value = 20.059 V/m; Power Drift = -0.05 dB
Peak SAR (extrapolated) = 2.46 W/kg
SAR(1 g) = 1.14 W/kg; SAR(10 g) = 0.478 W/kg
Maximum value of SAR (measured) = 1.76 W/kg

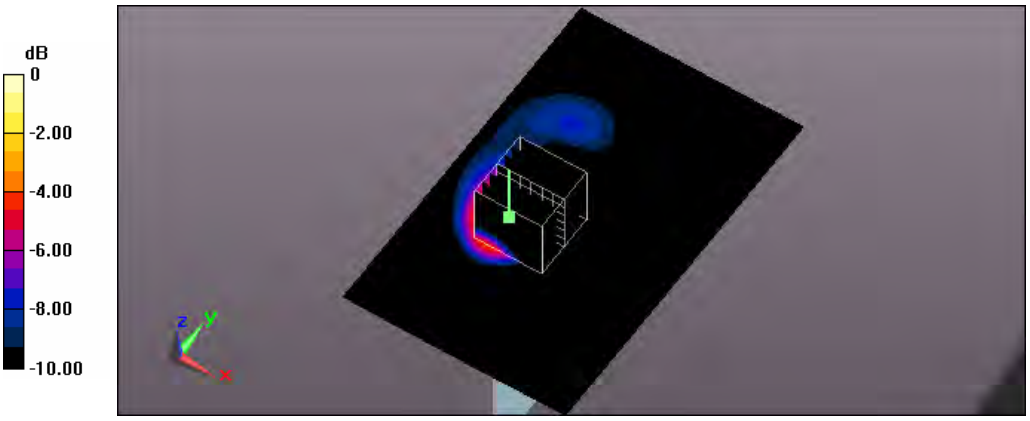

0 dB = 1.76 W/kg = 2.46 dBW/kg

Test Laboratory: A Test Lab Techno Corp.
Date: 2014/11/13Time: PM 10:38:37
172_Flat_LTE Band7 BW 20M CH20850_QPSK with 50 RB Size 0 RB Offset side 6 surface to phantom 10mm
DUT: AC785S-500;Type: WWAN Mobile Hotspot Portable Device;Serial: 014197000002053
Communication System: UID 0, Generic LTE (0);Frequency: 2510 MHz;Duty Cycle: 1:1
Medium parameters used: f = 2510 MHz; σ = 2.117 S/m; ε_r = 51.579; ρ = 1000 kg/m^3
Phantom section: Flat Section
Measurement Standard: DASY5 (IEEE/IEC/ANSI C63.19-2011)
DASY Configuration:

- Area Scan setting - Find Secondary Maximum Within:2.0dB and with a peak SAR value greater than 0.5 W/Kg
- Probe: EX3DV4 - SN3977;ConvF(6.68, 6.68, 6.68); Calibrated: 2014/2/17;
- Sensor-Surface: 2mm (Mechanical Surface Detection)
- Electronics: DAE4 Sn779;Calibrated: 2014/2/25
- Phantom: ELI v5.0;Type: QDOVA002AA;Serial: TP:1133
- Measurement SW: DASY52, Version 52.8 (7);SEMCAD X Version 14.6.10 (7164)

Flat/Area Scan (101x161x1):
Interpolated grid: dx=1.000 mm, dy=1.000 mm
Maximum value of SAR (interpolated) = 1.50 W/kg

Flat/Zoom Scan (7x7x7)/Cube 0:
Measurement grid: dx=5mm, dy=5mm, dz=5mm
Reference Value = 19.362 V/m; Power Drift = 0.03 dB
Peak SAR (extrapolated) = 1.96 W/kg
SAR(1 g) = 0.925 W/kg; SAR(10 g) = 0.430 W/kg
Maximum value of SAR (measured) = 1.40 W/kg

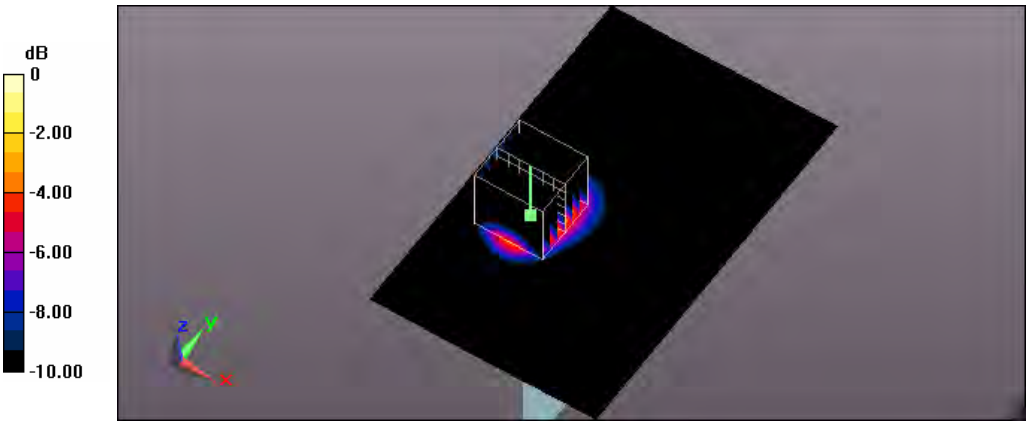

0 dB = 1.40 W/kg = 1.46 dBW/kg

Test Laboratory: A Test Lab Techno Corp.
Date: 2014/11/13Time: PM 05:44:37
103_Flat_LTE Band7 BW 20M CH21100_QPSK with 50 RB Size 0 RB Offset side 1 surface to phantom 10mm
DUT: AC785S-500;Type: WWAN Mobile Hotspot Portable Device;Serial: 014197000002053
Communication System: UID 0, Generic LTE (0);Frequency: 2535 MHz;Duty Cycle: 1:1
Medium parameters used: f = 2535 MHz; σ = 2.147 S/m; ε_r = 51.527; ρ = 1000 kg/m^3
Phantom section: Flat Section
Measurement Standard: DASY5 (IEEE/IEC/ANSI C63.19-2011)
DASY Configuration:

- Area Scan setting - Find Secondary Maximum Within:2.0dB and with a peak SAR value greater than 0.5 W/Kg
- Probe: EX3DV4 - SN3977;ConvF(6.68, 6.68, 6.68); Calibrated: 2014/2/17;
- Sensor-Surface: 2mm (Mechanical Surface Detection)
- Electronics: DAE4 Sn779;Calibrated: 2014/2/25
- Phantom: ELI v5.0;Type: QDOVA002AA;Serial: TP:1133
- Measurement SW: DASY52, Version 52.8 (7);SEMCAD X Version 14.6.10 (7164)

Flat/Area Scan (101x161x1):
Interpolated grid: dx=1.000 mm, dy=1.000 mm
Maximum value of SAR (interpolated) = 0.958 W/kg

Flat/Zoom Scan (7x7x7)/Cube 0:
Measurement grid: dx=5mm, dy=5mm, dz=5mm
Reference Value = 9.218 V/m; Power Drift = -0.13 dB
Peak SAR (extrapolated) = 1.25 W/kg
SAR(1 g) = 0.634 W/kg; SAR(10 g) = 0.334 W/kg
Maximum value of SAR (measured) = 0.920 W/kg

Flat/Zoom Scan (7x7x7)/Cube 1:
Measurement grid: dx=5mm, dy=5mm, dz=5mm
Reference Value = 9.218 V/m; Power Drift = -0.13 dB
Peak SAR (extrapolated) = 0.988 W/kg
SAR(1 g) = 0.478 W/kg; SAR(10 g) = 0.231 W/kg
Maximum value of SAR (measured) = 0.720 W/kg

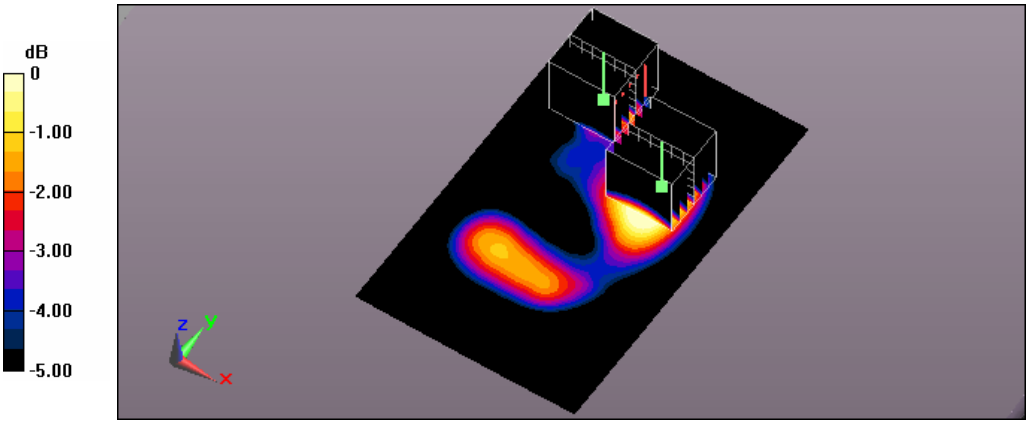

0 dB = 0.720 W/kg = -1.43 dBW/kg

Test Laboratory: A Test Lab Techno Corp.
Date: 2014/11/13Time: PM 02:15:32
104_Flat_LTE Band7 BW 20M CH21100_QPSK with 50 RB Size 0 RB Offset side 2 surface to phantom 10mm
DUT: AC785S-500;Type: WWAN Mobile Hotspot Portable Device;Serial: 014197000002053
Communication System: UID 0, Generic LTE (0);Frequency: 2535 MHz;Duty Cycle: 1:1
Medium parameters used: f = 2535 MHz; σ = 2.147 S/m; ε_r = 51.527; ρ = 1000 kg/m^3
Phantom section: Flat Section
Measurement Standard: DASY5 (IEEE/IEC/ANSI C63.19-2011)
DASY Configuration:

- Area Scan setting - Find Secondary Maximum Within:2.0dB and with a peak SAR value greater than 0.5 W/Kg
- Probe: EX3DV4 - SN3977;ConvF(6.68, 6.68, 6.68); Calibrated: 2014/2/17;
- Sensor-Surface: 2mm (Mechanical Surface Detection)
- Electronics: DAE4 Sn779;Calibrated: 2014/2/25
- Phantom: ELI v5.0;Type: QDOVA002AA;Serial: TP:1133
- Measurement SW: DASY52, Version 52.8 (7);SEMCAD X Version 14.6.10 (7164)

Flat/Area Scan (101x161x1):
Interpolated grid: dx=1.000 mm, dy=1.000 mm
Maximum value of SAR (interpolated) = 0.933 W/kg

Flat/Zoom Scan (7x7x7)/Cube 0:
Measurement grid: dx=5mm, dy=5mm, dz=5mm
Reference Value = 11.435 V/m; Power Drift = 0.05 dB
Peak SAR (extrapolated) = 1.23 W/kg
SAR(1 g) = 0.639 W/kg; SAR(10 g) = 0.346 W/kg
Maximum value of SAR (measured) = 0.909 W/kg

Flat/Zoom Scan (7x7x7)/Cube 1:
Measurement grid: dx=5mm, dy=5mm, dz=5mm
Reference Value = 11.435 V/m; Power Drift = 0.05 dB
Peak SAR (extrapolated) = 0.953 W/kg
SAR(1 g) = 0.509 W/kg; SAR(10 g) = 0.283 W/kg
Maximum value of SAR (measured) = 0.716 W/kg

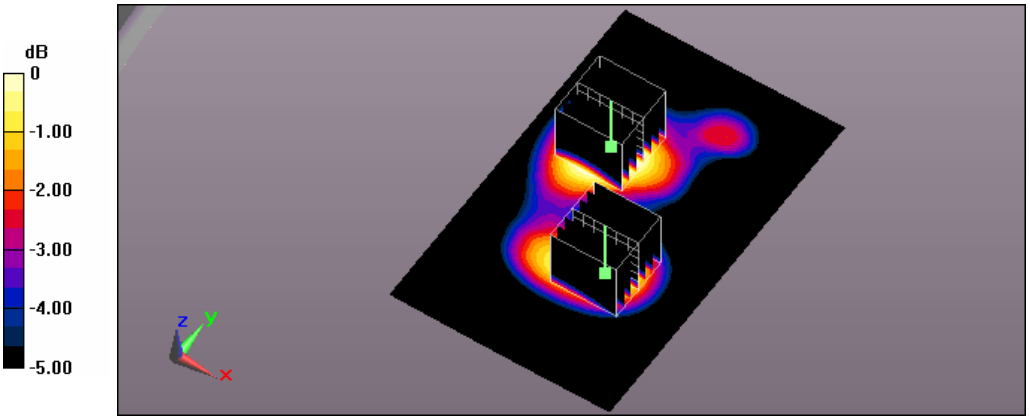

0 dB = 0.716 W/kg = -1.45 dBW/kg

Test Laboratory: A Test Lab Techno Corp.
Date: 2014/11/13Time: PM 07:25:51
105_Flat_LTE Band7 BW 20M CH21100_QPSK with 50 RB Size 0 RB Offset side 3 surface to phantom 10mm
DUT: AC785S-500;Type: WWAN Mobile Hotspot Portable Device;Serial: 014197000002053
Communication System: UID 0, Generic LTE (0);Frequency: 2535 MHz;Duty Cycle: 1:1
Medium parameters used: f = 2535 MHz; σ = 2.147 S/m; ε_r = 51.527; ρ = 1000 kg/m^3
Phantom section: Flat Section
Measurement Standard: DASY5 (IEEE/IEC/ANSI C63.19-2011)
DASY Configuration:

- Area Scan setting - Find Secondary Maximum Within:2.0dB and with a peak SAR value greater than 0.5 W/Kg
- Probe: EX3DV4 - SN3977;ConvF(6.68, 6.68, 6.68); Calibrated: 2014/2/17;
- Sensor-Surface: 2mm (Mechanical Surface Detection)
- Electronics: DAE4 Sn779;Calibrated: 2014/2/25
- Phantom: ELI v5.0;Type: QDOVA002AA;Serial: TP:1133
- Measurement SW: DASY52, Version 52.8 (7);SEMCAD X Version 14.6.10 (7164)

Flat/Area Scan (91x161x1):
Interpolated grid: dx=1.000 mm, dy=1.000 mm
Maximum value of SAR (interpolated) = 0.580 W/kg

Flat/Zoom Scan (7x7x7)/Cube 0:
Measurement grid: dx=5mm, dy=5mm, dz=5mm
Reference Value = 8.515 V/m; Power Drift = -0.02 dB
Peak SAR (extrapolated) = 0.748 W/kg
SAR(1 g) = 0.377 W/kg; SAR(10 g) = 0.190 W/kg
Maximum value of SAR (measured) = 0.554 W/kg

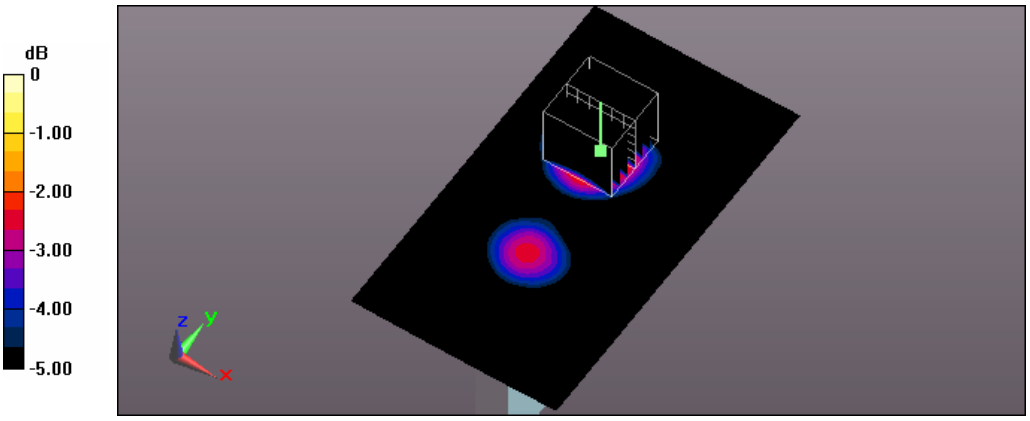

0 dB = 0.554 W/kg = -2.56 dBW/kg

Test Laboratory: A Test Lab Techno Corp.
Date: 2014/11/13Time: PM 09:20:50
106_Flat_LTE Band7 BW 20M CH21100_QPSK with 50 RB Size 0 RB Offset side 4 surface to phantom 10mm
DUT: AC785S-500;Type: WWAN Mobile Hotspot Portable Device;Serial: 014197000002053
Communication System: UID 0, Generic LTE (0);Frequency: 2535 MHz;Duty Cycle: 1:1
Medium parameters used: f = 2535 MHz; σ = 2.147 S/m; ε_r = 51.527; ρ = 1000 kg/m^3
Phantom section: Flat Section
Measurement Standard: DASY5 (IEEE/IEC/ANSI C63.19-2011)
DASY Configuration:

- Area Scan setting - Find Secondary Maximum Within:2.0dB and with a peak SAR value greater than 0.5 W/Kg
- Probe: EX3DV4 - SN3977;ConvF(6.68, 6.68, 6.68); Calibrated: 2014/2/17;
- Sensor-Surface: 2mm (Mechanical Surface Detection)
- Electronics: DAE4 Sn779;Calibrated: 2014/2/25
- Phantom: ELI v5.0;Type: QDOVA002AA;Serial: TP:1133
- Measurement SW: DASY52, Version 52.8 (7);SEMCAD X Version 14.6.10 (7164)

Flat/Area Scan (91x161x1):
Interpolated grid: dx=1.000 mm, dy=1.000 mm
Maximum value of SAR (interpolated) = 0.599 W/kg

Flat/Zoom Scan (7x7x7)/Cube 0:
Measurement grid: dx=5mm, dy=5mm, dz=5mm
Reference Value = 16.839 V/m; Power Drift = 0.01 dB
Peak SAR (extrapolated) = 0.824 W/kg
SAR(1 g) = 0.421 W/kg; SAR(10 g) = 0.224 W/kg
Maximum value of SAR (measured) = 0.611 W/kg

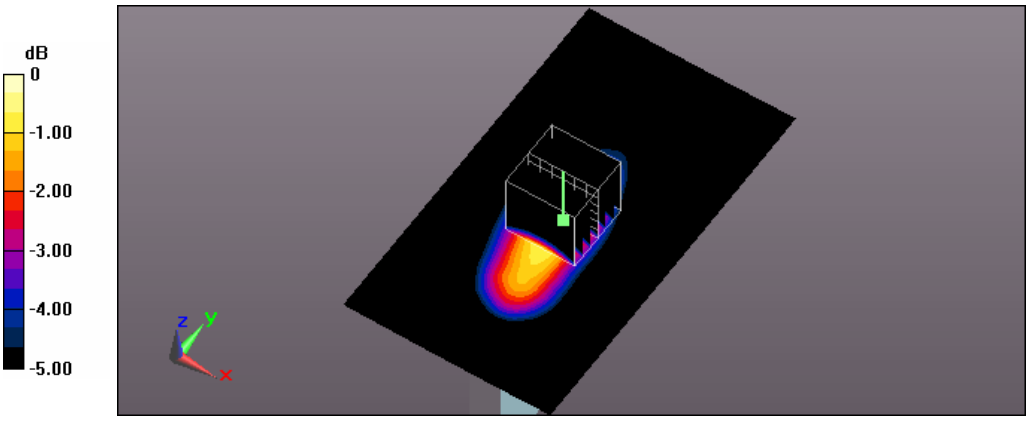

0 dB = 0.611 W/kg = -2.14 dBW/kg

Test Laboratory: A Test Lab Techno Corp.
Date: 2014/11/13Time: PM 09:57:35
107_Flat_LTE Band7 BW 20M CH21100_QPSK with 50 RB Size 0 RB Offset side 6 surface to phantom 10mm
DUT: AC785S-500;Type: WWAN Mobile Hotspot Portable Device;Serial: 014197000002053
Communication System: UID 0, Generic LTE (0);Frequency: 2535 MHz;Duty Cycle: 1:1
Medium parameters used: f = 2535 MHz; σ = 2.147 S/m; ε_r = 51.527; ρ = 1000 kg/m^3
Phantom section: Flat Section
Measurement Standard: DASY5 (IEEE/IEC/ANSI C63.19-2011)
DASY Configuration:

- Area Scan setting - Find Secondary Maximum Within:2.0dB and with a peak SAR value greater than 0.5 W/Kg
- Probe: EX3DV4 - SN3977;ConvF(6.68, 6.68, 6.68); Calibrated: 2014/2/17;
- Sensor-Surface: 2mm (Mechanical Surface Detection)
- Electronics: DAE4 Sn779;Calibrated: 2014/2/25
- Phantom: ELI v5.0;Type: QDOVA002AA;Serial: TP:1133
- Measurement SW: DASY52, Version 52.8 (7);SEMCAD X Version 14.6.10 (7164)

Flat/Area Scan (101x161x1):
Interpolated grid: dx=1.000 mm, dy=1.000 mm
Maximum value of SAR (interpolated) = 1.47 W/kg

Flat/Zoom Scan (7x7x7)/Cube 0:
Measurement grid: dx=5mm, dy=5mm, dz=5mm
Reference Value = 18.453 V/m; Power Drift = 0.01 dB
Peak SAR (extrapolated) = 2.00 W/kg
SAR(1 g) = 0.928 W/kg; SAR(10 g) = 0.425 W/kg
Maximum value of SAR (measured) = 1.43 W/kg

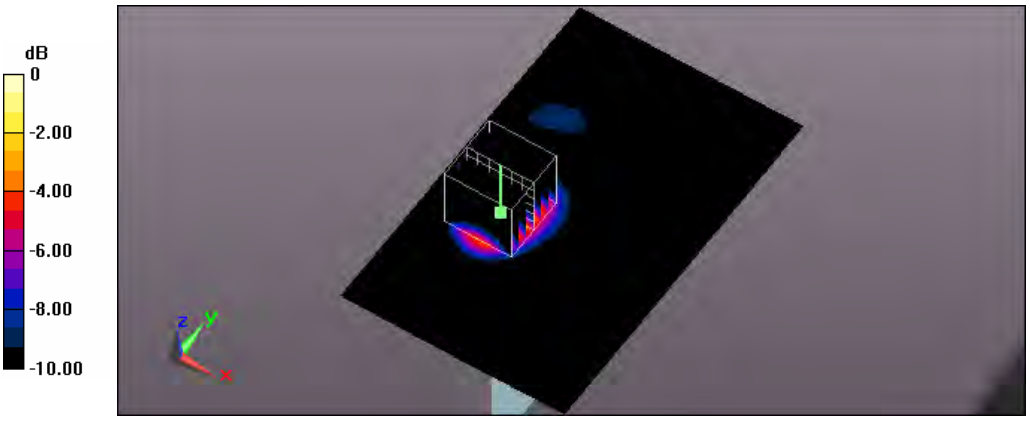

0 dB = 1.43 W/kg = 1.55 dBW/kg

Test Laboratory: A Test Lab Techno Corp.
Date: 2014/11/14Time: AM 12:39:27
173_Flat_LTE Band7 BW 20M CH21350_QPSK with 50 RB Size 0 RB Offset side 6 surface to phantom 10mm
DUT: AC785S-500;Type: WWAN Mobile Hotspot Portable Device;Serial: 014197000002053
Communication System: UID 0, Generic LTE (0);Frequency: 2560 MHz;Duty Cycle: 1:1
Medium parameters used: f = 2560 MHz; σ = 2.178 S/m; ε_r = 51.471; ρ = 1000 kg/m^3
Phantom section: Flat Section
Measurement Standard: DASY5 (IEEE/IEC/ANSI C63.19-2011)
DASY Configuration:

- Area Scan setting - Find Secondary Maximum Within:2.0dB and with a peak SAR value greater than 0.5 W/Kg
- Probe: EX3DV4 - SN3977;ConvF(6.68, 6.68, 6.68); Calibrated: 2014/2/17;
- Sensor-Surface: 2mm (Mechanical Surface Detection)
- Electronics: DAE4 Sn779;Calibrated: 2014/2/25
- Phantom: ELI v5.0;Type: QDOVA002AA;Serial: TP:1133
- Measurement SW: DASY52, Version 52.8 (7);SEMCAD X Version 14.6.10 (7164)

Flat/Area Scan (101x161x1):
Interpolated grid: dx=1.000 mm, dy=1.000 mm
Maximum value of SAR (interpolated) = 1.72 W/kg

Flat/Zoom Scan (7x7x7)/Cube 0:
Measurement grid: dx=5mm, dy=5mm, dz=5mm
Reference Value = 18.840 V/m; Power Drift = -0.05 dB
Peak SAR (extrapolated) = 2.27 W/kg
SAR(1 g) = 1.03 W/kg; SAR(10 g) = 0.460 W/kg
Maximum value of SAR (measured) = 1.62 W/kg

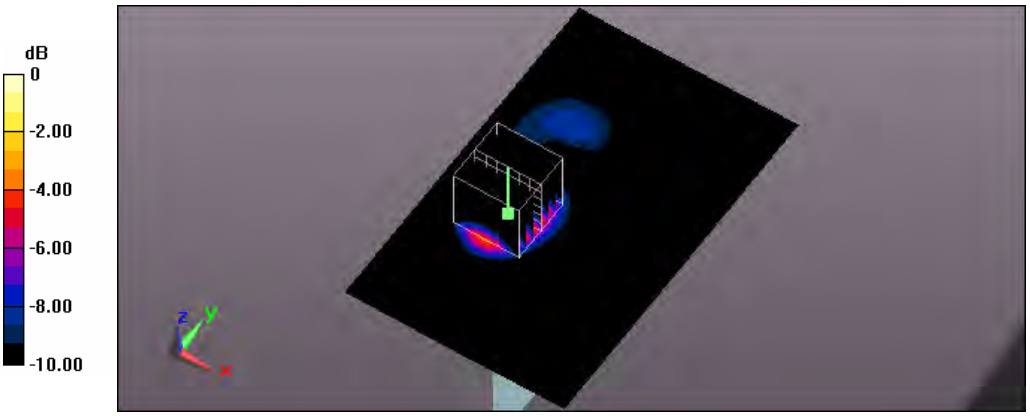

0 dB = 1.62 W/kg = 2.10 dBW/kg

Test Laboratory: A Test Lab Techno Corp.
Date: 2014/11/15Time: AM 03:28:30
108_Flat_LTE Band7 BW 20M CH21100_QPSK with 100 RB Size 0 RB Offset side 1 surface to phantom 10mm
DUT: AC785S-500;Type: WWAN Mobile Hotspot Portable Device;Serial: 014197000002053
Communication System: UID 0, Generic LTE (0);Frequency: 2535 MHz;Duty Cycle: 1:1
Medium parameters used: f = 2535 MHz; σ = 2.147 S/m; ε_r = 51.527; ρ = 1000 kg/m^3
Phantom section: Flat Section
Measurement Standard: DASY5 (IEEE/IEC/ANSI C63.19-2011)
DASY Configuration:

- Area Scan setting - Find Secondary Maximum Within:2.0dB and with a peak SAR value greater than 0.5 W/Kg
- Probe: EX3DV4 - SN3977;ConvF(6.68, 6.68, 6.68); Calibrated: 2014/2/17;
- Sensor-Surface: 2mm (Mechanical Surface Detection)
- Electronics: DAE4 Sn779;Calibrated: 2014/2/25
- Phantom: ELI v5.0;Type: QDOVA002AA;Serial: TP:1133
- Measurement SW: DASY52, Version 52.8 (7);SEMCAD X Version 14.6.10 (7164)

Flat/Area Scan (101x161x1):
Interpolated grid: dx=1.000 mm, dy=1.000 mm
Maximum value of SAR (interpolated) = 1.09 W/kg

Flat/Zoom Scan (7x7x7)/Cube 0:
Measurement grid: dx=5mm, dy=5mm, dz=5mm
Reference Value = 9.006 V/m; Power Drift = -0.11 dB
Peak SAR (extrapolated) = 1.47 W/kg
SAR(1 g) = 0.735 W/kg; SAR(10 g) = 0.386 W/kg
Maximum value of SAR (measured) = 1.06 W/kg

Flat/Zoom Scan (7x7x7)/Cube 1:
Measurement grid: dx=5mm, dy=5mm, dz=5mm
Reference Value = 9.006 V/m; Power Drift = -0.11 dB
Peak SAR (extrapolated) = 1.20 W/kg
SAR(1 g) = 0.584 W/kg; SAR(10 g) = 0.284 W/kg
Maximum value of SAR (measured) = 0.863 W/kg

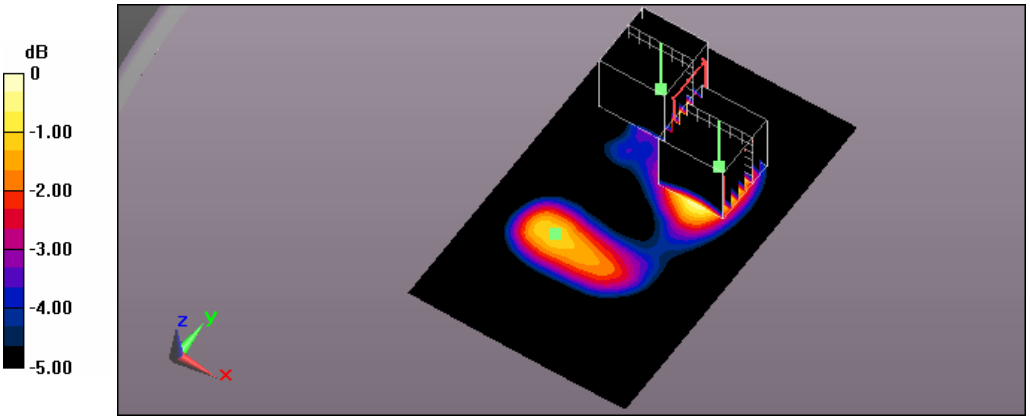

0 dB = 0.863 W/kg = -0.64 dBW/kg

Test Laboratory: A Test Lab Techno Corp.
Date: 2014/11/15Time: AM 04:19:01
109_Flat_LTE Band7 BW 20M CH21100_QPSK with 100 RB Size 0 RB Offset side 2 surface to phantom 10mm
DUT: AC785S-500;Type: WWAN Mobile Hotspot Portable Device;Serial: 014197000002053
Communication System: UID 0, Generic LTE (0);Frequency: 2535 MHz;Duty Cycle: 1:1
Medium parameters used: f = 2535 MHz; σ = 2.147 S/m; ε_r = 51.527; ρ = 1000 kg/m^3
Phantom section: Flat Section
Measurement Standard: DASY5 (IEEE/IEC/ANSI C63.19-2011)
DASY Configuration:

- Area Scan setting - Find Secondary Maximum Within:2.0dB and with a peak SAR value greater than 0.5 W/Kg
- Probe: EX3DV4 - SN3977;ConvF(6.68, 6.68, 6.68); Calibrated: 2014/2/17;
- Sensor-Surface: 2mm (Mechanical Surface Detection)
- Electronics: DAE4 Sn779;Calibrated: 2014/2/25
- Phantom: ELI v5.0;Type: QDOVA002AA;Serial: TP:1133
- Measurement SW: DASY52, Version 52.8 (7);SEMCAD X Version 14.6.10 (7164)

Flat/Area Scan (101x161x1):
Interpolated grid: dx=1.000 mm, dy=1.000 mm
Maximum value of SAR (interpolated) = 0.901 W/kg

Flat/Zoom Scan (7x7x7)/Cube 0:
Measurement grid: dx=5mm, dy=5mm, dz=5mm
Reference Value = 10.899 V/m; Power Drift = 0.11 dB
Peak SAR (extrapolated) = 1.24 W/kg
SAR(1 g) = 0.642 W/kg; SAR(10 g) = 0.344 W/kg
Maximum value of SAR (measured) = 0.913 W/kg

Flat/Zoom Scan (7x7x7)/Cube 1:
Measurement grid: dx=5mm, dy=5mm, dz=5mm
Reference Value = 10.899 V/m; Power Drift = 0.11 dB
Peak SAR (extrapolated) = 0.874 W/kg
SAR(1 g) = 0.460 W/kg; SAR(10 g) = 0.251 W/kg
Maximum value of SAR (measured) = 0.647 W/kg

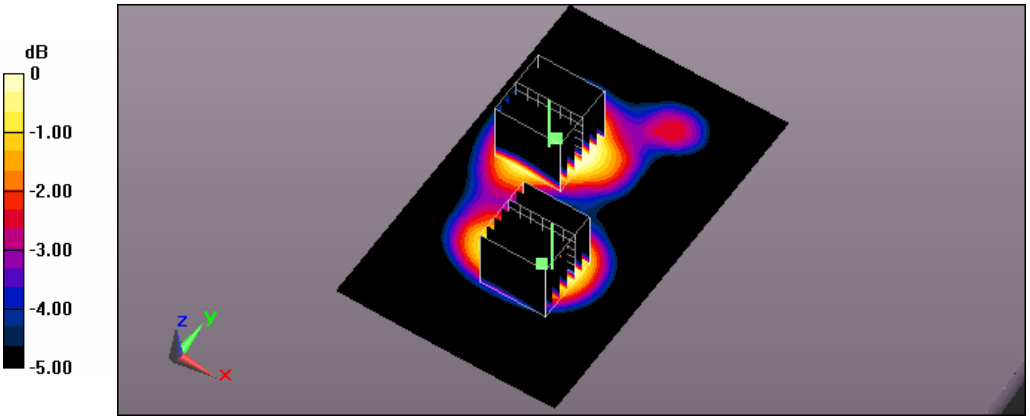

0 dB = 0.647 W/kg = -1.89 dBW/kg

Test Laboratory: A Test Lab Techno Corp.
Date: 2014/11/15Time: AM 02:50:50
110_Flat_LTE Band7 BW 20M CH21100_QPSK with 100 RB Size 0 RB Offset side 6 surface to phantom 10mm
DUT: AC785S-500;Type: WWAN Mobile Hotspot Portable Device;Serial: 014197000002053
Communication System: UID 0, Generic LTE (0);Frequency: 2535 MHz;Duty Cycle: 1:1
Medium parameters used: f = 2535 MHz; σ = 2.147 S/m; ε_r = 51.527; ρ = 1000 kg/m^3
Phantom section: Flat Section
Measurement Standard: DASY5 (IEEE/IEC/ANSI C63.19-2011)
DASY Configuration:

- Area Scan setting - Find Secondary Maximum Within:2.0dB and with a peak SAR value greater than 0.5 W/Kg
- Probe: EX3DV4 - SN3977;ConvF(6.68, 6.68, 6.68); Calibrated: 2014/2/17;
- Sensor-Surface: 2mm (Mechanical Surface Detection)
- Electronics: DAE4 Sn779;Calibrated: 2014/2/25
- Phantom: ELI v5.0;Type: QDOVA002AA;Serial: TP:1133
- Measurement SW: DASY52, Version 52.8 (7);SEMCAD X Version 14.6.10 (7164)

Flat/Area Scan (101x161x1):
Interpolated grid: dx=1.000 mm, dy=1.000 mm
Maximum value of SAR (interpolated) = 1.42 W/kg

Flat/Zoom Scan (7x7x7)/Cube 0:
Measurement grid: dx=5mm, dy=5mm, dz=5mm
Reference Value = 17.830 V/m; Power Drift = -0.05 dB
Peak SAR (extrapolated) = 1.91 W/kg
SAR(1 g) = 0.901 W/kg; SAR(10 g) = 0.419 W/kg
Maximum value of SAR (measured) = 1.38 W/kg

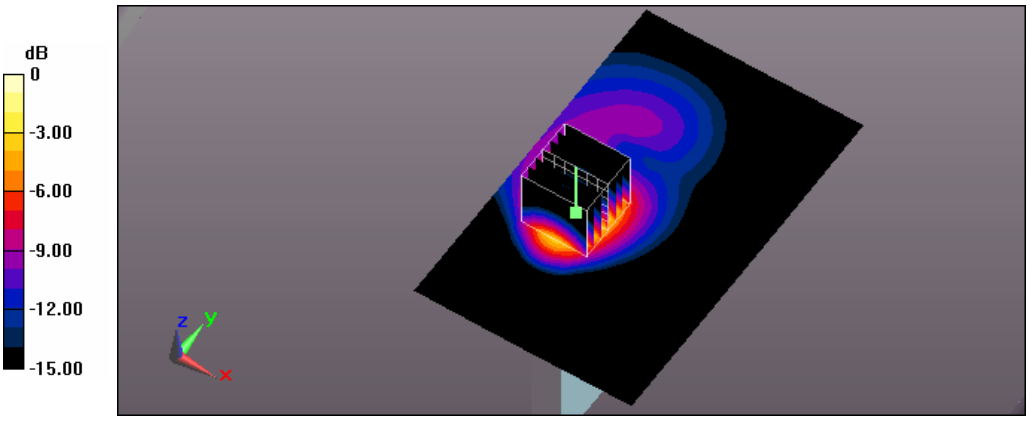

0 dB = 1.38 W/kg = 1.40 dBW/kg

Test Laboratory: A Test Lab Techno Corp.
Date: 2014/11/16Time: AM 10:32:11
177_Flat_LTE Band12 BW 10M CH23060_QPSK with 1 RB Size 0 RB Offset side 1 surface to phantom 10mm
DUT: AC785S-500;Type: WWAN Mobile Hotspot Portable Device;Serial: 014197000002053
Communication System: UID 0, Generic LTE (0);Frequency: 704 MHz;Duty Cycle: 1:1
Medium parameters used: f = 704 MHz; σ = 0.942 S/m; ε_r = 54.069; ρ = 1000 kg/m^3
Phantom section: Flat Section
Measurement Standard: DASY5 (IEEE/IEC/ANSI C63.19-2011)
DASY Configuration:

- Area Scan setting - Find Secondary Maximum Within:2.0dB and with a peak SAR value greater than 0.5 W/Kg
- Probe: EX3DV4 - SN3977;ConvF(9.78, 9.78, 9.78); Calibrated: 2014/2/17;
- Sensor-Surface: 2mm (Mechanical Surface Detection)
- Electronics: DAE4 Sn779;Calibrated: 2014/2/25
- Phantom: ELI v5.0;Type: QDOVA002AA;Serial: TP:1133
- Measurement SW: DASY52, Version 52.8 (7);SEMCAD X Version 14.6.10 (7164)

Flat/Area Scan (71x111x1):
Interpolated grid: dx=1.500 mm, dy=1.500 mm
Maximum value of SAR (interpolated) = 1.18 W/kg

Flat/Zoom Scan (5x5x7)/Cube 0:
Measurement grid: dx=8mm, dy=8mm, dz=5mm
Reference Value = 30.397 V/m; Power Drift = -0.03 dB
Peak SAR (extrapolated) = 1.41 W/kg
SAR(1 g) = 0.961 W/kg; SAR(10 g) = 0.658 W/kg
Maximum value of SAR (measured) = 1.20 W/kg

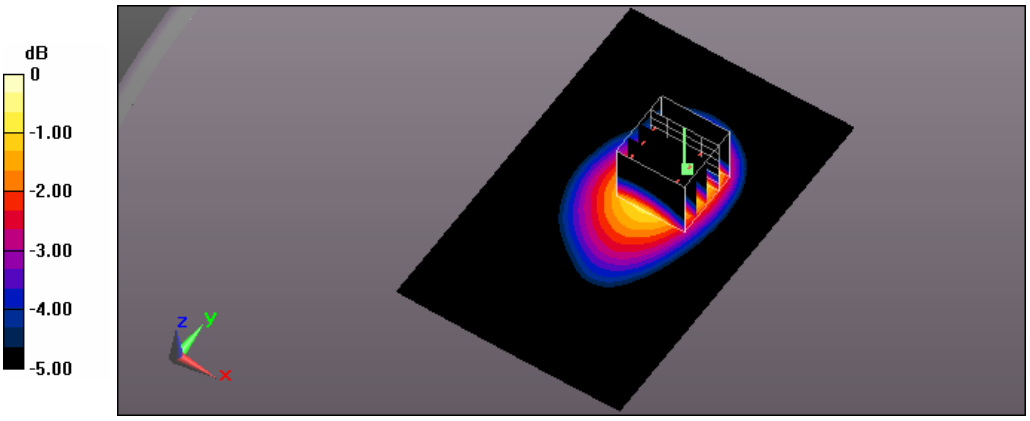

0 dB = 1.20 W/kg = 0.79 dBW/kg

Test Laboratory: A Test Lab Techno Corp.
Date: 2014/11/16Time: PM 03:39:34
184_Flat_LTE Band12 BW 10M CH23060_QPSK with 1 RB Size 0 RB Offset side 2 surface to phantom 10mm
DUT: AC785S-500;Type: WWAN Mobile Hotspot Portable Device;Serial: 014197000002053
Communication System: UID 0, Generic LTE (0);Frequency: 704 MHz;Duty Cycle: 1:1
Medium parameters used: f = 704 MHz; σ = 0.942 S/m; ε_r = 54.069; ρ = 1000 kg/m^3
Phantom section: Flat Section
Measurement Standard: DASY5 (IEEE/IEC/ANSI C63.19-2011)
DASY Configuration:

- Area Scan setting - Find Secondary Maximum Within:2.0dB and with a peak SAR value greater than 0.5 W/Kg
- Probe: EX3DV4 - SN3977;ConvF(9.78, 9.78, 9.78); Calibrated: 2014/2/17;
- Sensor-Surface: 2mm (Mechanical Surface Detection)
- Electronics: DAE4 Sn779;Calibrated: 2014/2/25
- Phantom: ELI v5.0;Type: QDOVA002AA;Serial: TP:1133
- Measurement SW: DASY52, Version 52.8 (7);SEMCAD X Version 14.6.10 (7164)

Flat/Area Scan (71x111x1):
Interpolated grid: dx=1.500 mm, dy=1.500 mm
Maximum value of SAR (interpolated) = 0.918 W/kg

Flat/Zoom Scan (5x5x7)/Cube 0:
Measurement grid: dx=8mm, dy=8mm, dz=5mm
Reference Value = 27.450 V/m; Power Drift = 0.02 dB
Peak SAR (extrapolated) = 1.06 W/kg
SAR(1 g) = 0.755 W/kg; SAR(10 g) = 0.528 W/kg
Maximum value of SAR (measured) = 0.917 W/kg

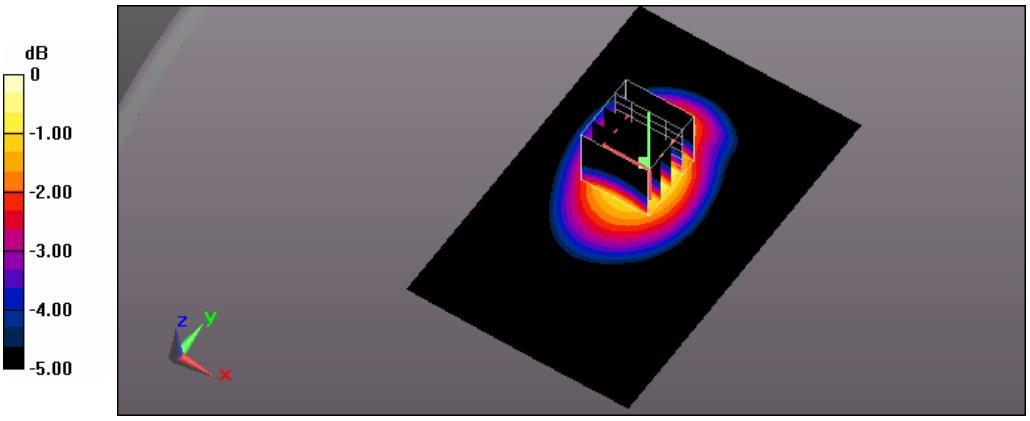

0 dB = 0.917 W/kg = -0.38 dBW/kg

Test Laboratory: A Test Lab Techno Corp.
Date: 2014/11/16Time: AM 10:08:22
111_Flat_LTE Band12 BW 10M CH23095_QPSK with 1 RB Size 0 RB Offset side 1 surface to phantom 10mm
DUT: AC785S-500;Type: WWAN Mobile Hotspot Portable Device;Serial: 014197000002053
Communication System: UID 0, Generic LTE (0);Frequency: 707.5 MHz;Duty Cycle: 1:1
Medium parameters used (interpolated): f = 707.5 MHz; σ = 0.945 S/m; ε_r = 54.029; ρ = 1000 kg/m^3
Phantom section: Flat Section
Measurement Standard: DASY5 (IEEE/IEC/ANSI C63.19-2011)
DASY Configuration:

- Area Scan setting - Find Secondary Maximum Within:2.0dB and with a peak SAR value greater than 0.5 W/Kg
- Probe: EX3DV4 - SN3977;ConvF(9.78, 9.78, 9.78); Calibrated: 2014/2/17;
- Sensor-Surface: 2mm (Mechanical Surface Detection)
- Electronics: DAE4 Sn779;Calibrated: 2014/2/25
- Phantom: ELI v5.0;Type: QDOVA002AA;Serial: TP:1133
- Measurement SW: DASY52, Version 52.8 (7);SEMCAD X Version 14.6.10 (7164)

Flat/Area Scan (71x111x1):
Interpolated grid: dx=1.500 mm, dy=1.500 mm
Maximum value of SAR (interpolated) = 1.18 W/kg

Flat/Zoom Scan (5x5x7)/Cube 0:
Measurement grid: dx=8mm, dy=8mm, dz=5mm
Reference Value = 30.487 V/m; Power Drift = -0.02 dB
Peak SAR (extrapolated) = 1.40 W/kg
SAR(1 g) = 0.955 W/kg; SAR(10 g) = 0.656 W/kg
Maximum value of SAR (measured) = 1.17 W/kg

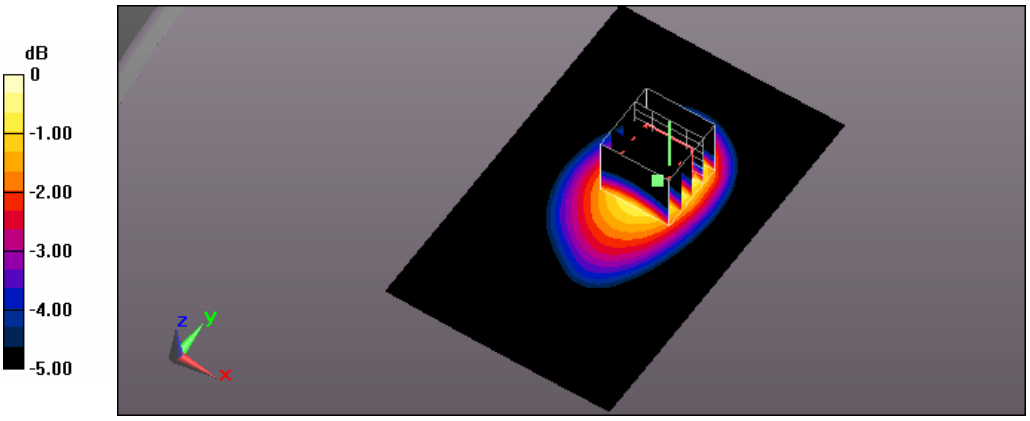

0 dB = 1.17 W/kg = 0.68 dBW/kg

Test Laboratory: A Test Lab Techno Corp.
Date: 2014/11/16Time: PM 03:19:05
112_Flat_LTE Band12 BW 10M CH23095_QPSK with 1 RB Size 0 RB Offset side 2 surface to phantom 10mm
DUT: AC785S-500;Type: WWAN Mobile Hotspot Portable Device;Serial: 014197000002053
Communication System: UID 0, Generic LTE (0);Frequency: 707.5 MHz;Duty Cycle: 1:1
Medium parameters used (interpolated): f = 707.5 MHz; σ = 0.945 S/m; ε_r = 54.029; ρ = 1000 kg/m^3
Phantom section: Flat Section
Measurement Standard: DASY5 (IEEE/IEC/ANSI C63.19-2011)
DASY Configuration:

- Area Scan setting - Find Secondary Maximum Within:2.0dB and with a peak SAR value greater than 0.5 W/Kg
- Probe: EX3DV4 - SN3977;ConvF(9.78, 9.78, 9.78); Calibrated: 2014/2/17;
- Sensor-Surface: 2mm (Mechanical Surface Detection)
- Electronics: DAE4 Sn779;Calibrated: 2014/2/25
- Phantom: ELI v5.0;Type: QDOVA002AA;Serial: TP:1133
- Measurement SW: DASY52, Version 52.8 (7);SEMCAD X Version 14.6.10 (7164)

Flat/Area Scan (71x111x1):
Interpolated grid: dx=1.500 mm, dy=1.500 mm
Maximum value of SAR (interpolated) = 0.943 W/kg

Flat/Zoom Scan (5x5x7)/Cube 0:
Measurement grid: dx=8mm, dy=8mm, dz=5mm
Reference Value = 27.814 V/m; Power Drift = 0.11 dB
Peak SAR (extrapolated) = 1.09 W/kg
SAR(1 g) = 0.783 W/kg; SAR(10 g) = 0.546 W/kg
Maximum value of SAR (measured) = 0.945 W/kg

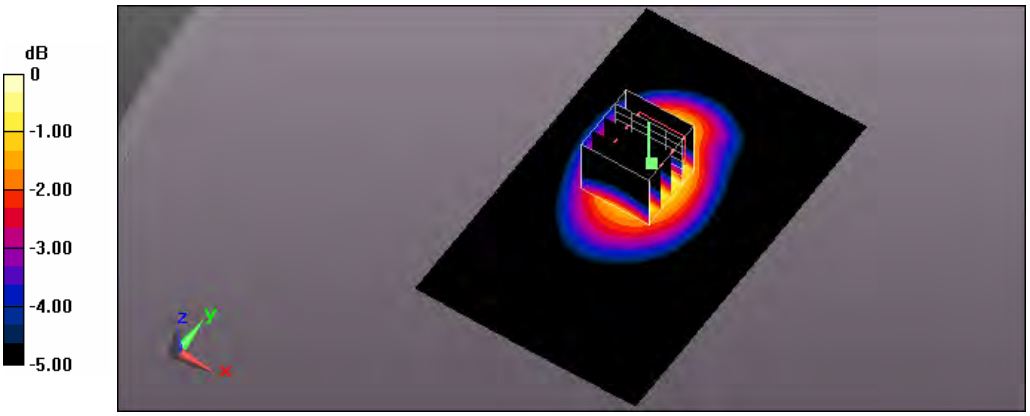

0 dB = 0.945 W/kg = -0.25 dBW/kg

Test Laboratory: A Test Lab Techno Corp.
Date: 2014/11/17Time: PM 02:59:00
113_Flat_LTE Band12 BW 10M CH23095_QPSK with 1 RB Size 0 RB Offset side 3 surface to phantom 10mm
DUT: AC785S-500;Type: WWAN Mobile Hotspot Portable Device;Serial: 014197000002053
Communication System: UID 0, Generic LTE (0);Frequency: 707.5 MHz;Duty Cycle: 1:1
Medium parameters used (interpolated): f = 707.5 MHz; σ = 0.945 S/m; ε_r = 54.029; ρ = 1000 kg/m^3
Phantom section: Flat Section
Measurement Standard: DASY5 (IEEE/IEC/ANSI C63.19-2011)
DASY Configuration:

- Area Scan setting - Find Secondary Maximum Within:2.0dB and with a peak SAR value greater than 0.5 W/Kg
- Probe: EX3DV4 - SN3977;ConvF(9.78, 9.78, 9.78); Calibrated: 2014/2/17;
- Sensor-Surface: 2mm (Mechanical Surface Detection)
- Electronics: DAE4 Sn779;Calibrated: 2014/2/25
- Phantom: ELI v5.0;Type: QDOVA002AA;Serial: TP:1133
- Measurement SW: DASY52, Version 52.8 (7);SEMCAD X Version 14.6.10 (7164)

Flat/Area Scan (61x111x1):
Interpolated grid: dx=1.500 mm, dy=1.500 mm
Maximum value of SAR (interpolated) = 0.377 W/kg

Flat/Zoom Scan (5x5x7)/Cube 0:
Measurement grid: dx=8mm, dy=8mm, dz=5mm
Reference Value = 19.473 V/m; Power Drift = 0.01 dB
Peak SAR (extrapolated) = 0.434 W/kg
SAR(1 g) = 0.312 W/kg; SAR(10 g) = 0.218 W/kg
Maximum value of SAR (measured) = 0.378 W/kg

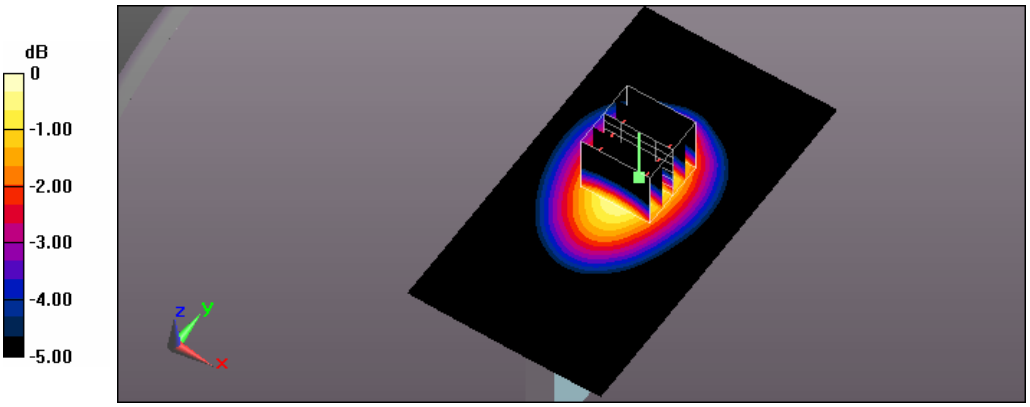

0 dB = 0.378 W/kg = -4.23 dBW/kg

Test Laboratory: A Test Lab Techno Corp.
Date: 2014/11/17Time: PM 04:25:57
114_Flat_LTE Band12 BW 10M CH23095_QPSK with 1 RB Size 0 RB Offset side 4 surface to phantom 10mm
DUT: AC785S-500;Type: WWAN Mobile Hotspot Portable Device;Serial: 014197000002053
Communication System: UID 0, Generic LTE (0);Frequency: 707.5 MHz;Duty Cycle: 1:1
Medium parameters used (interpolated): f = 707.5 MHz; σ = 0.945 S/m; ε_r = 54.029; ρ = 1000 kg/m^3
Phantom section: Flat Section
Measurement Standard: DASY5 (IEEE/IEC/ANSI C63.19-2011)
DASY Configuration:

- Area Scan setting - Find Secondary Maximum Within:2.0dB and with a peak SAR value greater than 0.5 W/Kg
- Probe: EX3DV4 - SN3977;ConvF(9.78, 9.78, 9.78); Calibrated: 2014/2/17;
- Sensor-Surface: 2mm (Mechanical Surface Detection)
- Electronics: DAE4 Sn779;Calibrated: 2014/2/25
- Phantom: ELI v5.0;Type: QDOVA002AA;Serial: TP:1133
- Measurement SW: DASY52, Version 52.8 (7);SEMCAD X Version 14.6.10 (7164)

Flat/Area Scan (61x111x1):
Interpolated grid: dx=1.500 mm, dy=1.500 mm
Maximum value of SAR (interpolated) = 0.418 W/kg

Flat/Zoom Scan (5x5x7)/Cube 0:
Measurement grid: dx=8mm, dy=8mm, dz=5mm
Reference Value = 20.756 V/m; Power Drift = 0.03 dB
Peak SAR (extrapolated) = 0.477 W/kg
SAR(1 g) = 0.333 W/kg; SAR(10 g) = 0.227 W/kg
Maximum value of SAR (measured) = 0.412 W/kg

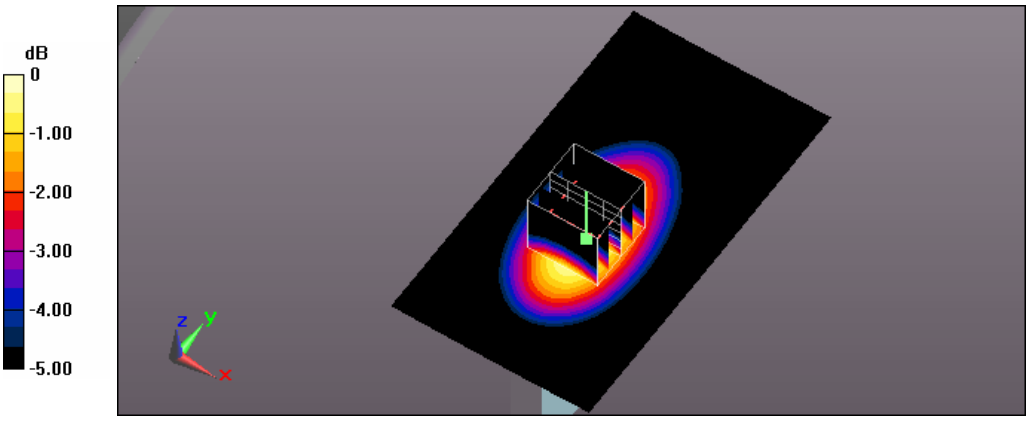

0 dB = 0.412 W/kg = -3.85 dBW/kg

Test Laboratory: A Test Lab Techno Corp.
Date: 2014/11/17Time: PM 08:22:39
115_Flat_LTE Band12 BW 10M CH23095_QPSK with 1 RB Size 0 RB Offset side 6 surface to phantom 10mm
DUT: AC785S-500;Type: WWAN Mobile Hotspot Portable Device;Serial: 014197000002053
Communication System: UID 0, Generic LTE (0);Frequency: 707.5 MHz;Duty Cycle: 1:1
Medium parameters used (interpolated): f = 707.5 MHz; σ = 0.945 S/m; ε_r = 54.029; ρ = 1000 kg/m^3
Phantom section: Flat Section
Measurement Standard: DASY5 (IEEE/IEC/ANSI C63.19-2011)
DASY Configuration:

- Area Scan setting - Find Secondary Maximum Within:2.0dB and with a peak SAR value greater than 0.5 W/Kg
- Probe: EX3DV4 - SN3977;ConvF(9.78, 9.78, 9.78); Calibrated: 2014/2/17;
- Sensor-Surface: 2mm (Mechanical Surface Detection)
- Electronics: DAE4 Sn779;Calibrated: 2014/2/25
- Phantom: ELI v5.0;Type: QDOVA002AA;Serial: TP:1133
- Measurement SW: DASY52, Version 52.8 (7);SEMCAD X Version 14.6.10 (7164)

Flat/Area Scan (61x111x1):
Interpolated grid: dx=1.500 mm, dy=1.500 mm
Maximum value of SAR (interpolated) = 0.125 W/kg

Flat/Zoom Scan (5x5x7)/Cube 0:
Measurement grid: dx=8mm, dy=8mm, dz=5mm
Reference Value = 11.701 V/m; Power Drift = 0.07 dB
Peak SAR (extrapolated) = 0.162 W/kg
SAR(1 g) = 0.087 W/kg; SAR(10 g) = 0.050 W/kg
Maximum value of SAR (measured) = 0.125 W/kg

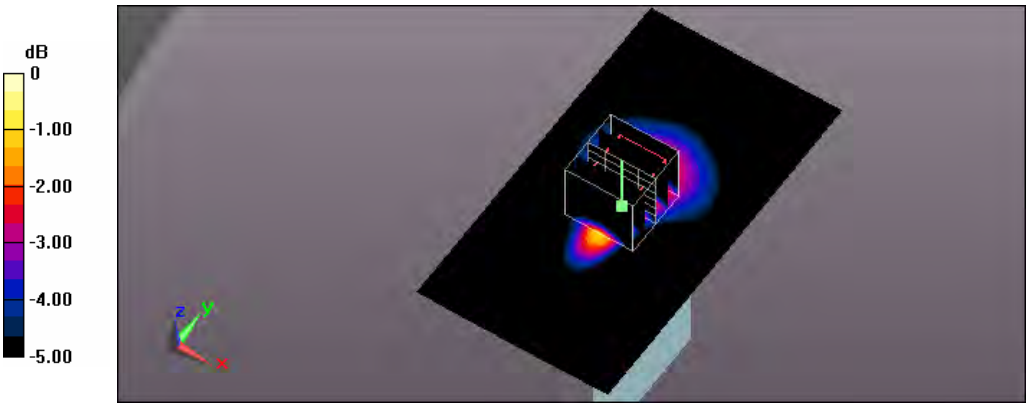

0 dB = 0.125 W/kg = -9.03 dBW/kg

Test Laboratory: A Test Lab Techno Corp.
Date: 2014/11/16Time: AM 11:10:04
178_Flat_LTE Band12 BW 10M CH23130_QPSK with 1 RB Size 0 RB Offset side 1 surface to phantom 10mm
DUT: AC785S-500;Type: WWAN Mobile Hotspot Portable Device;Serial: 014197000002053
Communication System: UID 0, Generic LTE (0);Frequency: 711 MHz;Duty Cycle: 1:1
Medium parameters used: f = 711 MHz; σ = 0.948 S/m; ε_r = 53.992; ρ = 1000 kg/m^3
Phantom section: Flat Section
Measurement Standard: DASY5 (IEEE/IEC/ANSI C63.19-2011)
DASY Configuration:

- Area Scan setting - Find Secondary Maximum Within:2.0dB and with a peak SAR value greater than 0.5 W/Kg
- Probe: EX3DV4 - SN3977;ConvF(9.78, 9.78, 9.78); Calibrated: 2014/2/17;
- Sensor-Surface: 2mm (Mechanical Surface Detection)
- Electronics: DAE4 Sn779;Calibrated: 2014/2/25
- Phantom: ELI v5.0;Type: QDOVA002AA;Serial: TP:1133
- Measurement SW: DASY52, Version 52.8 (7);SEMCAD X Version 14.6.10 (7164)

Flat/Area Scan (71x111x1):
Interpolated grid: dx=1.500 mm, dy=1.500 mm
Maximum value of SAR (interpolated) = 1.22 W/kg

Flat/Zoom Scan (5x5x7)/Cube 0:
Measurement grid: dx=8mm, dy=8mm, dz=5mm
Reference Value = 31.227 V/m; Power Drift = -0.07 dB
Peak SAR (extrapolated) = 1.45 W/kg
SAR(1 g) = 0.993 W/kg; SAR(10 g) = 0.680 W/kg
Maximum value of SAR (measured) = 1.23 W/kg

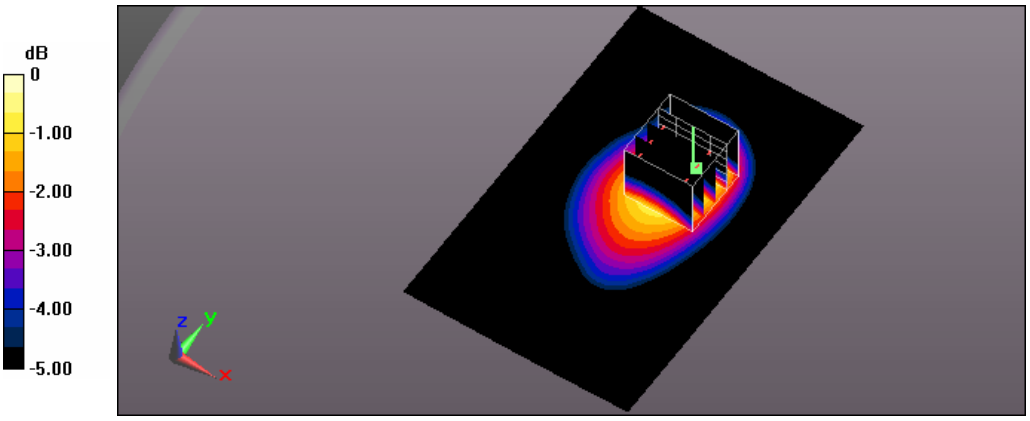

0 dB = 1.23 W/kg = 0.90 dBW/kg

Test Laboratory: A Test Lab Techno Corp.
Date: 2014/11/16Time: PM 03:59:16
185_Flat_LTE Band12 BW 10M CH23130_QPSK with 1 RB Size 0 RB Offset side 2 surface to phantom 10mm
DUT: AC785S-500;Type: WWAN Mobile Hotspot Portable Device;Serial: 014197000002053
Communication System: UID 0, Generic LTE (0);Frequency: 711 MHz;Duty Cycle: 1:1
Medium parameters used: f = 711 MHz; σ = 0.948 S/m; ε_r = 53.992; ρ = 1000 kg/m^3
Phantom section: Flat Section
Measurement Standard: DASY5 (IEEE/IEC/ANSI C63.19-2011)
DASY Configuration:

- Area Scan setting - Find Secondary Maximum Within:2.0dB and with a peak SAR value greater than 0.5 W/Kg
- Probe: EX3DV4 - SN3977;ConvF(9.78, 9.78, 9.78); Calibrated: 2014/2/17;
- Sensor-Surface: 2mm (Mechanical Surface Detection)
- Electronics: DAE4 Sn779;Calibrated: 2014/2/25
- Phantom: ELI v5.0;Type: QDOVA002AA;Serial: TP:1133
- Measurement SW: DASY52, Version 52.8 (7);SEMCAD X Version 14.6.10 (7164)

Flat/Area Scan (71x111x1):
Interpolated grid: dx=1.500 mm, dy=1.500 mm
Maximum value of SAR (interpolated) = 0.989 W/kg

Flat/Zoom Scan (5x5x7)/Cube 0:
Measurement grid: dx=8mm, dy=8mm, dz=5mm
Reference Value = 28.640 V/m; Power Drift = 0.03 dB
Peak SAR (extrapolated) = 1.14 W/kg
SAR(1 g) = 0.813 W/kg; SAR(10 g) = 0.568 W/kg
Maximum value of SAR (measured) = 0.986 W/kg

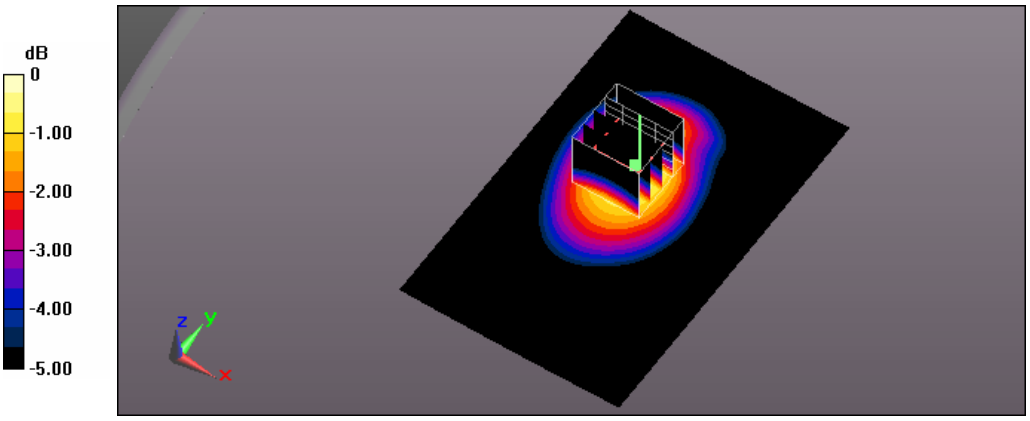

0 dB = 0.986 W/kg = -0.06 dBW/kg

Test Laboratory: A Test Lab Techno Corp.
Date: 2014/11/16Time: PM 03:59:16
185_Flat_LTE Band12 BW 10M CH23130_QPSK with 1 RB Size 0 RB Offset side 2 surface to phantom 10mm
DUT: AC785S-500;Type: WWAN Mobile Hotspot Portable Device;Serial: 014197000002053
Communication System: UID 0, Generic LTE (0);Frequency: 711 MHz;Duty Cycle: 1:1
Medium parameters used: f = 711 MHz; σ = 0.948 S/m; ε_r = 53.992; ρ = 1000 kg/m^3
Phantom section: Flat Section
Measurement Standard: DASY5 (IEEE/IEC/ANSI C63.19-2011)
DASY Configuration:

- Area Scan setting - Find Secondary Maximum Within:2.0dB and with a peak SAR value greater than 0.5 W/Kg
- Probe: EX3DV4 - SN3977;ConvF(9.78, 9.78, 9.78); Calibrated: 2014/2/17;
- Sensor-Surface: 2mm (Mechanical Surface Detection)
- Electronics: DAE4 Sn779;Calibrated: 2014/2/25
- Phantom: ELI v5.0;Type: QDOVA002AA;Serial: TP:1133
- Measurement SW: DASY52, Version 52.8 (7);SEMCAD X Version 14.6.10 (7164)

Flat/Area Scan (71x111x1):
Interpolated grid: dx=1.500 mm, dy=1.500 mm
Maximum value of SAR (interpolated) = 0.989 W/kg

Flat/Zoom Scan (5x5x7)/Cube 0:
Measurement grid: dx=8mm, dy=8mm, dz=5mm
Reference Value = 28.640 V/m; Power Drift = 0.03 dB
Peak SAR (extrapolated) = 1.14 W/kg
SAR(1 g) = 0.813 W/kg; SAR(10 g) = 0.568 W/kg
Maximum value of SAR (measured) = 0.986 W/kg

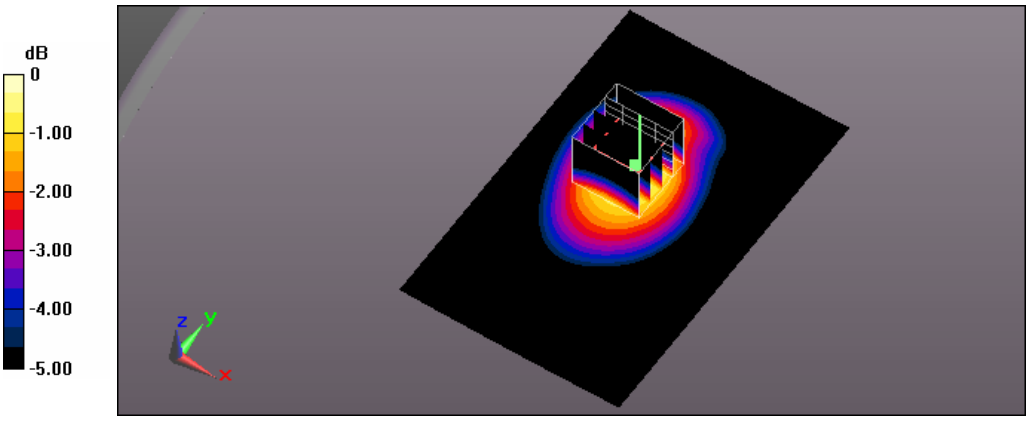

0 dB = 0.986 W/kg = -0.06 dBW/kg

Test Laboratory: A Test Lab Techno Corp.
Date: 2014/11/16Time: PM 12:20:26
181_Flat_LTE Band12 BW 10M CH23095_QPSK with 25 RB Size 0 RB Offset side 1 surface to phantom 10mm
DUT: AC785S-500;Type: WWAN Mobile Hotspot Portable Device;Serial: 014197000002053
Communication System: UID 0, Generic LTE (0);Frequency: 707.5 MHz;Duty Cycle: 1:1
Medium parameters used (interpolated): f = 707.5 MHz; σ = 0.945 S/m; ε_r = 54.029; ρ = 1000 kg/m^3
Phantom section: Flat Section
Measurement Standard: DASY5 (IEEE/IEC/ANSI C63.19-2011)
DASY Configuration:

- Area Scan setting - Find Secondary Maximum Within:2.0dB and with a peak SAR value greater than 0.5 W/Kg
- Probe: EX3DV4 - SN3977;ConvF(9.78, 9.78, 9.78); Calibrated: 2014/2/17;
- Sensor-Surface: 2mm (Mechanical Surface Detection)
- Electronics: DAE4 Sn779;Calibrated: 2014/2/25
- Phantom: ELI v5.0;Type: QDOVA002AA;Serial: TP:1133
- Measurement SW: DASY52, Version 52.8 (7);SEMCAD X Version 14.6.10 (7164)

Flat/Area Scan (71x111x1):
Interpolated grid: dx=1.500 mm, dy=1.500 mm
Maximum value of SAR (interpolated) = 0.925 W/kg

Flat/Zoom Scan (5x5x7)/Cube 0:
Measurement grid: dx=8mm, dy=8mm, dz=5mm
Reference Value = 27.274 V/m; Power Drift = -0.10 dB
Peak SAR (extrapolated) = 1.10 W/kg
SAR(1 g) = 0.749 W/kg; SAR(10 g) = 0.512 W/kg
Maximum value of SAR (measured) = 0.932 W/kg

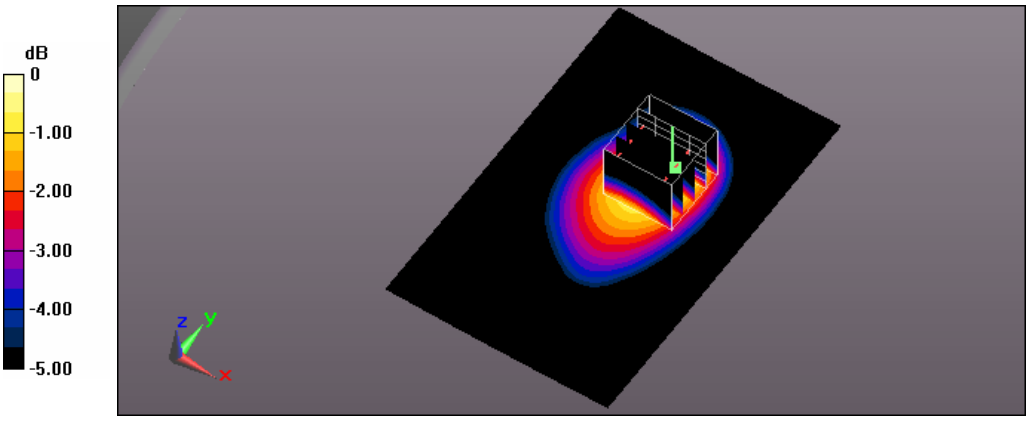

0 dB = 0.932 W/kg = -0.31 dBW/kg

Test Laboratory: A Test Lab Techno Corp.
Date: 2014/11/16Time: AM 11:30:11
116_Flat_LTE Band12 BW 10M CH23130_QPSK with 25 RB Size 0 RB Offset side 1 surface to phantom 10mm
DUT: AC785S-500;Type: WWAN Mobile Hotspot Portable Device;Serial: 014197000002053
Communication System: UID 0, Generic LTE (0);Frequency: 711 MHz;Duty Cycle: 1:1
Medium parameters used: f = 711 MHz; σ = 0.948 S/m; ε_r = 53.992; ρ = 1000 kg/m^3
Phantom section: Flat Section
Measurement Standard: DASY5 (IEEE/IEC/ANSI C63.19-2011)
DASY Configuration:

- Area Scan setting - Find Secondary Maximum Within:2.0dB and with a peak SAR value greater than 0.5 W/Kg
- Probe: EX3DV4 - SN3977;ConvF(9.78, 9.78, 9.78); Calibrated: 2014/2/17;
- Sensor-Surface: 2mm (Mechanical Surface Detection)
- Electronics: DAE4 Sn779;Calibrated: 2014/2/25
- Phantom: ELI v5.0;Type: QDOVA002AA;Serial: TP:1133
- Measurement SW: DASY52, Version 52.8 (7);SEMCAD X Version 14.6.10 (7164)

Flat/Area Scan (71x111x1):
Interpolated grid: dx=1.500 mm, dy=1.500 mm
Maximum value of SAR (interpolated) = 0.950 W/kg

Flat/Zoom Scan (5x5x7)/Cube 0:
Measurement grid: dx=8mm, dy=8mm, dz=5mm
Reference Value = 27.361 V/m; Power Drift = 0.01 dB
Peak SAR (extrapolated) = 1.14 W/kg
SAR(1 g) = 0.772 W/kg; SAR(10 g) = 0.528 W/kg
Maximum value of SAR (measured) = 0.956 W/kg

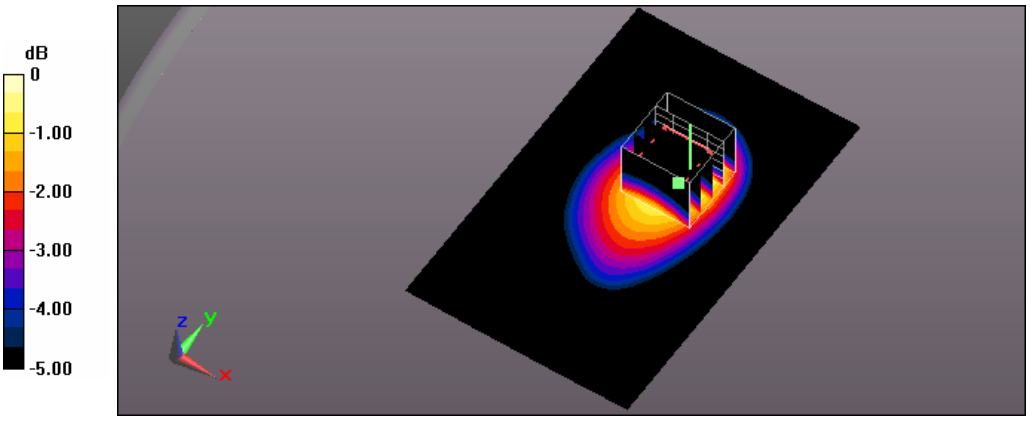

0 dB = 0.956 W/kg = -0.20 dBW/kg

Test Laboratory: A Test Lab Techno Corp.
Date: 2014/11/16Time: PM 04:19:09
117_Flat_LTE Band12 BW 10M CH23130_QPSK with 25 RB Size 0 RB Offset side 2 surface to phantom 10mm
DUT: AC785S-500;Type: WWAN Mobile Hotspot Portable Device;Serial: 014197000002053
Communication System: UID 0, Generic LTE (0);Frequency: 711 MHz;Duty Cycle: 1:1
Medium parameters used: f = 711 MHz; σ = 0.948 S/m; ε_r = 53.992; ρ = 1000 kg/m^3
Phantom section: Flat Section
Measurement Standard: DASY5 (IEEE/IEC/ANSI C63.19-2011)
DASY Configuration:

- Area Scan setting - Find Secondary Maximum Within:2.0dB and with a peak SAR value greater than 0.5 W/Kg
- Probe: EX3DV4 - SN3977;ConvF(9.78, 9.78, 9.78); Calibrated: 2014/2/17;
- Sensor-Surface: 2mm (Mechanical Surface Detection)
- Electronics: DAE4 Sn779;Calibrated: 2014/2/25
- Phantom: ELI v5.0;Type: QDOVA002AA;Serial: TP:1133
- Measurement SW: DASY52, Version 52.8 (7);SEMCAD X Version 14.6.10 (7164)

Flat/Area Scan (71x111x1):
Interpolated grid: dx=1.500 mm, dy=1.500 mm
Maximum value of SAR (interpolated) = 0.761 W/kg

Flat/Zoom Scan (5x5x7)/Cube 0:
Measurement grid: dx=8mm, dy=8mm, dz=5mm
Reference Value = 25.311 V/m; Power Drift = 0.02 dB
Peak SAR (extrapolated) = 0.881 W/kg
SAR(1 g) = 0.630 W/kg; SAR(10 g) = 0.440 W/kg
Maximum value of SAR (measured) = 0.763 W/kg

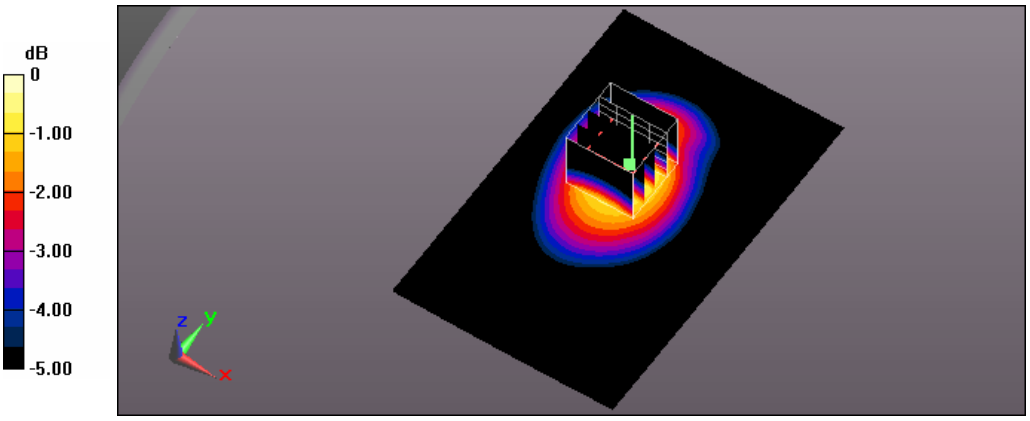

0 dB = 0.763 W/kg = -1.17 dBW/kg

Test Laboratory: A Test Lab Techno Corp.
Date: 2014/11/17Time: PM 03:18:21
118_Flat_LTE Band12 BW 10M CH23130_QPSK with 25 RB Size 0 RB Offset side 3 surface to phantom 10mm
DUT: AC785S-500;Type: WWAN Mobile Hotspot Portable Device;Serial: 014197000002053
Communication System: UID 0, Generic LTE (0);Frequency: 711 MHz;Duty Cycle: 1:1
Medium parameters used: f = 711 MHz; σ = 0.948 S/m; ε_r = 53.992; ρ = 1000 kg/m^3
Phantom section: Flat Section
Measurement Standard: DASY5 (IEEE/IEC/ANSI C63.19-2011)
DASY Configuration:

- Area Scan setting - Find Secondary Maximum Within:2.0dB and with a peak SAR value greater than 0.5 W/Kg
- Probe: EX3DV4 - SN3977;ConvF(9.78, 9.78, 9.78); Calibrated: 2014/2/17;
- Sensor-Surface: 2mm (Mechanical Surface Detection)
- Electronics: DAE4 Sn779;Calibrated: 2014/2/25
- Phantom: ELI v5.0;Type: QDOVA002AA;Serial: TP:1133
- Measurement SW: DASY52, Version 52.8 (7);SEMCAD X Version 14.6.10 (7164)

Flat/Area Scan (61x111x1):
Interpolated grid: dx=1.500 mm, dy=1.500 mm
Maximum value of SAR (interpolated) = 0.309 W/kg

Flat/Zoom Scan (5x5x7)/Cube 0:
Measurement grid: dx=8mm, dy=8mm, dz=5mm
Reference Value = 17.600 V/m; Power Drift = -0.02 dB
Peak SAR (extrapolated) = 0.353 W/kg
SAR(1 g) = 0.254 W/kg; SAR(10 g) = 0.177 W/kg
Maximum value of SAR (measured) = 0.310 W/kg

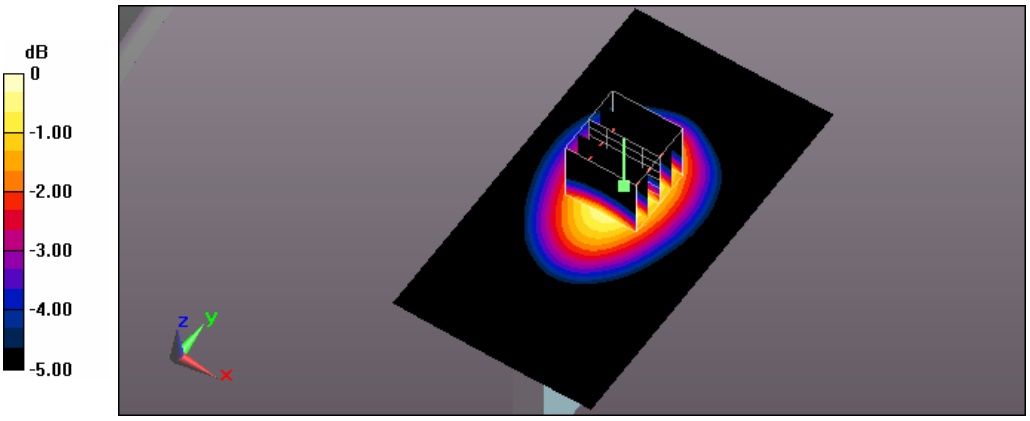

0 dB = 0.310 W/kg = -5.09 dBW/kg

Test Laboratory: A Test Lab Techno Corp.
Date: 2014/11/17Time: PM 04:58:43
119_Flat_LTE Band12 BW 10M CH23130_QPSK with 25 RB Size 0 RB Offset side 4 surface to phantom 10mm
DUT: AC785S-500;Type: WWAN Mobile Hotspot Portable Device;Serial: 014197000002053
Communication System: UID 0, Generic LTE (0);Frequency: 711 MHz;Duty Cycle: 1:1
Medium parameters used: f = 711 MHz; σ = 0.948 S/m; ε_r = 53.992; ρ = 1000 kg/m^3
Phantom section: Flat Section
Measurement Standard: DASY5 (IEEE/IEC/ANSI C63.19-2011)
DASY Configuration:

- Area Scan setting - Find Secondary Maximum Within:2.0dB and with a peak SAR value greater than 0.5 W/Kg
- Probe: EX3DV4 - SN3977;ConvF(9.78, 9.78, 9.78); Calibrated: 2014/2/17;
- Sensor-Surface: 2mm (Mechanical Surface Detection)
- Electronics: DAE4 Sn779;Calibrated: 2014/2/25
- Phantom: ELI v5.0;Type: QDOVA002AA;Serial: TP:1133
- Measurement SW: DASY52, Version 52.8 (7);SEMCAD X Version 14.6.10 (7164)

Flat/Area Scan (61x111x1):
Interpolated grid: dx=1.500 mm, dy=1.500 mm
Maximum value of SAR (interpolated) = 0.352 W/kg

Flat/Zoom Scan (5x5x7)/Cube 0:
Measurement grid: dx=8mm, dy=8mm, dz=5mm
Reference Value = 19.230 V/m; Power Drift = -0.00 dB
Peak SAR (extrapolated) = 0.402 W/kg
SAR(1 g) = 0.280 W/kg; SAR(10 g) = 0.190 W/kg
Maximum value of SAR (measured) = 0.346 W/kg

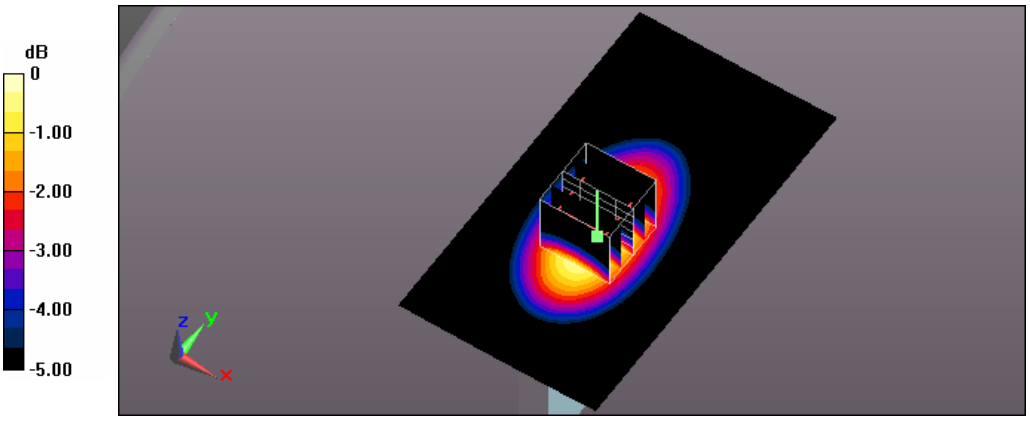

0 dB = 0.346 W/kg = -4.61 dBW/kg

Test Laboratory: A Test Lab Techno Corp.
Date: 2014/11/17Time: PM 08:03:37
120_Flat_LTE Band12 BW 10M CH23130_QPSK with 25 RB Size 0 RB Offset side 6 surface to phantom 10mm
DUT: AC785S-500;Type: WWAN Mobile Hotspot Portable Device;Serial: 014197000002053
Communication System: UID 0, Generic LTE (0);Frequency: 711 MHz;Duty Cycle: 1:1
Medium parameters used: f = 711 MHz; σ = 0.948 S/m; ε_r = 53.992; ρ = 1000 kg/m^3
Phantom section: Flat Section
Measurement Standard: DASY5 (IEEE/IEC/ANSI C63.19-2011)
DASY Configuration:

- Area Scan setting - Find Secondary Maximum Within:2.0dB and with a peak SAR value greater than 0.5 W/Kg
- Probe: EX3DV4 - SN3977;ConvF(9.78, 9.78, 9.78); Calibrated: 2014/2/17;
- Sensor-Surface: 2mm (Mechanical Surface Detection)
- Electronics: DAE4 Sn779;Calibrated: 2014/2/25
- Phantom: ELI v5.0;Type: QDOVA002AA;Serial: TP:1133
- Measurement SW: DASY52, Version 52.8 (7);SEMCAD X Version 14.6.10 (7164)

Flat/Area Scan (61x111x1):
Interpolated grid: dx=1.500 mm, dy=1.500 mm
Maximum value of SAR (interpolated) = 0.0984 W/kg

Flat/Zoom Scan (5x5x7)/Cube 0:
Measurement grid: dx=8mm, dy=8mm, dz=5mm
Reference Value = 10.252 V/m; Power Drift = 0.11 dB
Peak SAR (extrapolated) = 0.125 W/kg
SAR(1 g) = 0.068 W/kg; SAR(10 g) = 0.039 W/kg
Maximum value of SAR (measured) = 0.0971 W/kg

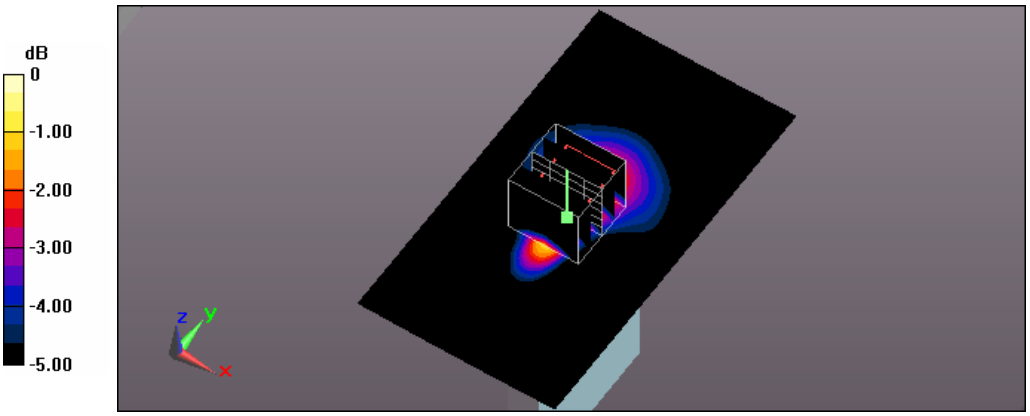

0 dB = 0.0971 W/kg = -10.13 dBW/kg

Test Laboratory: A Test Lab Techno Corp.
Date: 2014/11/17Time: PM 01:12:27
188_Flat_LTE Band12 BW 10M CH23060_QPSK with 50 RB Size 0 RB Offset side 1 surface to phantom 10mm
DUT: AC785S-500;Type: WWAN Mobile Hotspot Portable Device;Serial: 014197000002053
Communication System: UID 0, Generic LTE (0);Frequency: 704 MHz;Duty Cycle: 1:1
Medium parameters used: f = 704 MHz; σ = 0.942 S/m; ε_r = 54.069; ρ = 1000 kg/m^3
Phantom section: Flat Section
Measurement Standard: DASY5 (IEEE/IEC/ANSI C63.19-2011)
DASY Configuration:

- Area Scan setting - Find Secondary Maximum Within:2.0dB and with a peak SAR value greater than 0.5 W/Kg
- Probe: EX3DV4 - SN3977;ConvF(9.78, 9.78, 9.78); Calibrated: 2014/2/17;
- Sensor-Surface: 2mm (Mechanical Surface Detection)
- Electronics: DAE4 Sn779;Calibrated: 2014/2/25
- Phantom: ELI v5.0;Type: QDOVA002AA;Serial: TP:1133
- Measurement SW: DASY52, Version 52.8 (7);SEMCAD X Version 14.6.10 (7164)

Flat/Area Scan (71x111x1):
Interpolated grid: dx=1.500 mm, dy=1.500 mm
Maximum value of SAR (interpolated) = 0.910 W/kg

Flat/Zoom Scan (5x5x7)/Cube 0:
Measurement grid: dx=8mm, dy=8mm, dz=5mm
Reference Value = 27.186 V/m; Power Drift = 0.03 dB
Peak SAR (extrapolated) = 1.08 W/kg
SAR(1 g) = 0.746 W/kg; SAR(10 g) = 0.512 W/kg
Maximum value of SAR (measured) = 0.913 W/kg

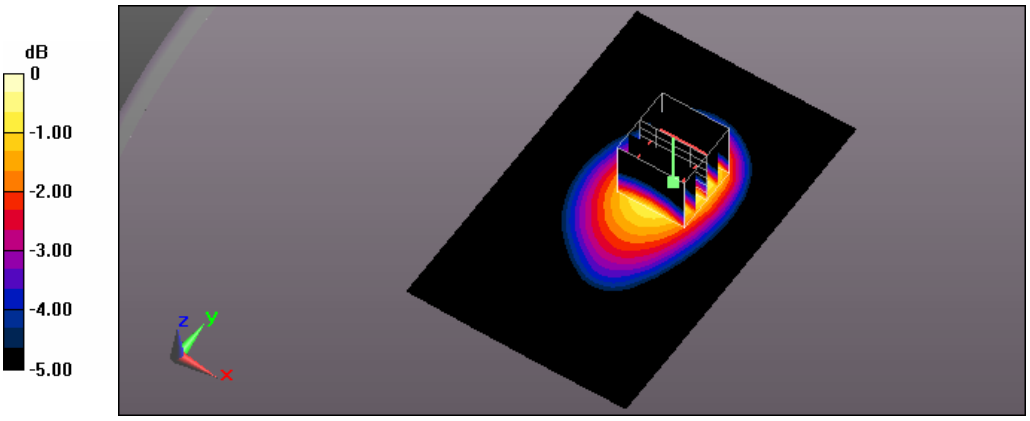

0 dB = 0.913 W/kg = -0.40 dBW/kg

Test Laboratory: A Test Lab Techno Corp.
Date: 2014/11/17Time: PM 02:14:28
190_Flat_LTE Band12 BW 10M CH23060_QPSK with 50 RB Size 0 RB Offset side 2 surface to phantom 10mm
DUT: AC785S-500;Type: WWAN Mobile Hotspot Portable Device;Serial: 014197000002053
Communication System: UID 0, Generic LTE (0);Frequency: 704 MHz;Duty Cycle: 1:1
Medium parameters used: f = 704 MHz; σ = 0.942 S/m; ε_r = 54.069; ρ = 1000 kg/m^3
Phantom section: Flat Section
Measurement Standard: DASY5 (IEEE/IEC/ANSI C63.19-2011)
DASY Configuration:

- Area Scan setting - Find Secondary Maximum Within:2.0dB and with a peak SAR value greater than 0.5 W/Kg
- Probe: EX3DV4 - SN3977;ConvF(9.78, 9.78, 9.78); Calibrated: 2014/2/17;
- Sensor-Surface: 2mm (Mechanical Surface Detection)
- Electronics: DAE4 Sn779;Calibrated: 2014/2/25
- Phantom: ELI v5.0;Type: QDOVA002AA;Serial: TP:1133
- Measurement SW: DASY52, Version 52.8 (7);SEMCAD X Version 14.6.10 (7164)

Flat/Area Scan (71x111x1):
Interpolated grid: dx=1.500 mm, dy=1.500 mm
Maximum value of SAR (interpolated) = 0.742 W/kg

Flat/Zoom Scan (5x5x7)/Cube 0:
Measurement grid: dx=8mm, dy=8mm, dz=5mm
Reference Value = 24.935 V/m; Power Drift = 0.04 dB
Peak SAR (extrapolated) = 0.851 W/kg
SAR(1 g) = 0.613 W/kg; SAR(10 g) = 0.429 W/kg
Maximum value of SAR (measured) = 0.743 W/kg

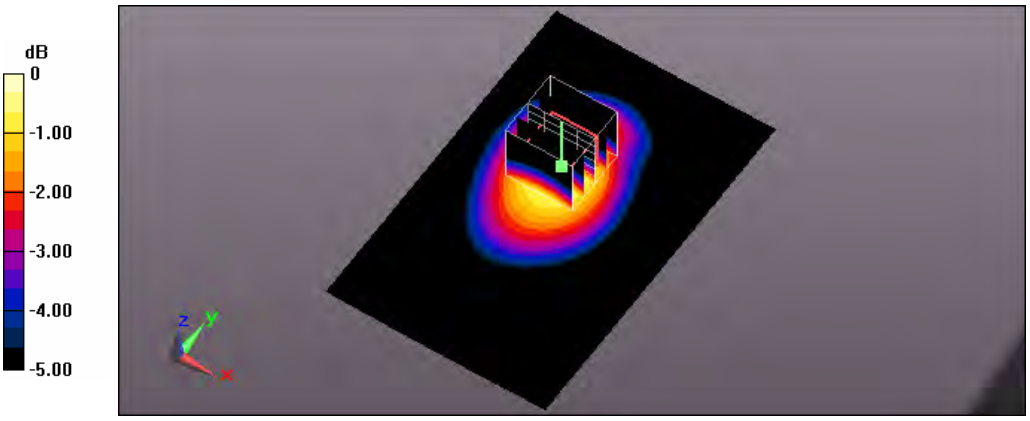

0 dB = 0.743 W/kg = -1.29 dBW/kg

Test Laboratory: A Test Lab Techno Corp.
Date: 2014/10/1Time: PM 02:34:38
121_Flat_LTE Band13 BW 10M CH23230_QPSK with 1 RB Size 0 RB Offset side 1 surface to phantom 10mm
DUT: AC785S-500;Type: WWAN Mobile Hotspot Portable Device;Serial: 014197000002053
Communication System: UID 0, Generic LTE (0);Frequency: 782 MHz;Duty Cycle: 1:1
Medium parameters used: f = 782 MHz; σ = 0.994 S/m; ε_r = 53.415; ρ = 1000 kg/m^3
Phantom section: Flat Section
Measurement Standard: DASY5 (IEEE/IEC/ANSI C63.19-2011)
DASY Configuration:

- Area Scan setting - Find Secondary Maximum Within:2.0dB and with a peak SAR value greater than 0.5 W/Kg
- Probe: EX3DV4 - SN3977;ConvF(9.78, 9.78, 9.78); Calibrated: 2014/2/17;
- Sensor-Surface: 2mm (Mechanical Surface Detection)
- Electronics: DAE4 Sn779;Calibrated: 2014/2/25
- Phantom: ELI v5.0;Type: QDOVA002AA;Serial: TP:1133
- Measurement SW: DASY52, Version 52.8 (7);SEMCAD X Version 14.6.10 (7164)

Flat/Area Scan (71x111x1):
Interpolated grid: dx=1.500 mm, dy=1.500 mm
Maximum value of SAR (interpolated) = 1.17 W/kg

Flat/Zoom Scan (5x5x7)/Cube 0:
Measurement grid: dx=8mm, dy=8mm, dz=5mm
Reference Value = 18.532 V/m; Power Drift = 0.17 dB
Peak SAR (extrapolated) = 1.47 W/kg
SAR(1 g) = 0.922 W/kg; SAR(10 g) = 0.573 W/kg
Maximum value of SAR (measured) = 1.21 W/kg

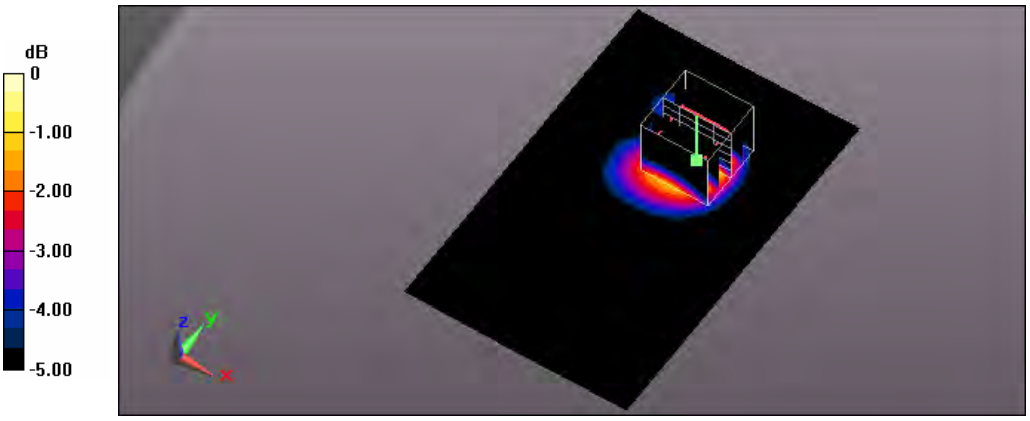

0 dB = 1.21 W/kg = 0.83 dBW/kg

Test Laboratory: A Test Lab Techno Corp.
Date: 2014/10/1Time: PM 03:38:21
122_Flat_LTE Band13 BW 10M CH23230_QPSK with 1 RB Size 0 RB Offset side 2 surface to phantom 10mm
DUT: AC785S-500;Type: WWAN Mobile Hotspot Portable Device;Serial: 014197000002053
Communication System: UID 0, Generic LTE (0);Frequency: 782 MHz;Duty Cycle: 1:1
Medium parameters used: f = 782 MHz; σ = 0.994 S/m; ε_r = 53.415; ρ = 1000 kg/m^3
Phantom section: Flat Section
Measurement Standard: DASY5 (IEEE/IEC/ANSI C63.19-2011)
DASY Configuration:

- Area Scan setting - Find Secondary Maximum Within:2.0dB and with a peak SAR value greater than 0.5 W/Kg
- Probe: EX3DV4 - SN3977;ConvF(9.78, 9.78, 9.78); Calibrated: 2014/2/17;
- Sensor-Surface: 2mm (Mechanical Surface Detection)
- Electronics: DAE4 Sn779;Calibrated: 2014/2/25
- Phantom: ELI v5.0;Type: QDOVA002AA;Serial: TP:1133
- Measurement SW: DASY52, Version 52.8 (7);SEMCAD X Version 14.6.10 (7164)

Flat/Area Scan (71x111x1):
Interpolated grid: dx=1.500 mm, dy=1.500 mm
Maximum value of SAR (interpolated) = 0.774 W/kg

Flat/Zoom Scan (5x5x7)/Cube 0:
Measurement grid: dx=8mm, dy=8mm, dz=5mm
Reference Value = 17.960 V/m; Power Drift = -0.06 dB
Peak SAR (extrapolated) = 0.927 W/kg
SAR(1 g) = 0.620 W/kg; SAR(10 g) = 0.410 W/kg
Maximum value of SAR (measured) = 0.784 W/kg

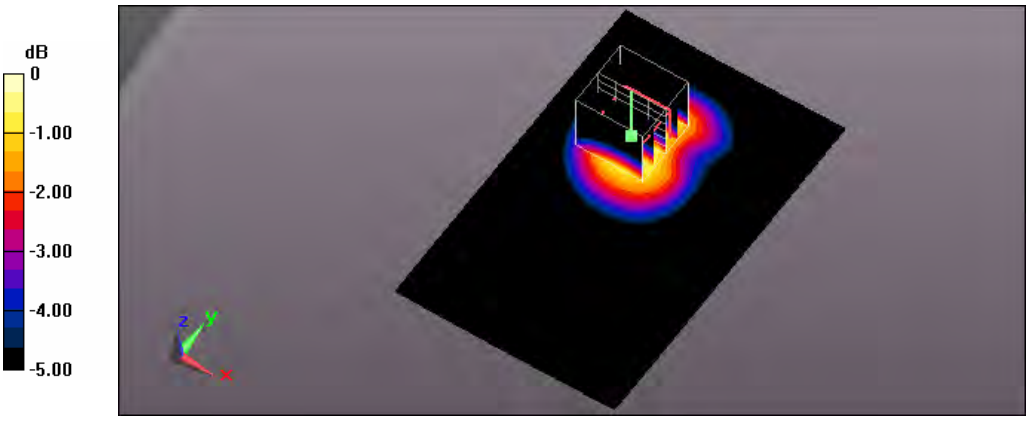

0 dB = 0.784 W/kg = -1.06 dBW/kg

Test Laboratory: A Test Lab Techno Corp.
Date: 2014/10/1Time: PM 04:02:12
123_Flat_LTE Band13 BW 10M CH23230_QPSK with 1 RB Size 0 RB Offset side 3 surface to phantom 10mm
DUT: AC785S-500;Type: WWAN Mobile Hotspot Portable Device;Serial: 014197000002053
Communication System: UID 0, Generic LTE (0);Frequency: 782 MHz;Duty Cycle: 1:1
Medium parameters used: f = 782 MHz; σ = 0.994 S/m; ε_r = 53.415; ρ = 1000 kg/m^3
Phantom section: Flat Section
Measurement Standard: DASY5 (IEEE/IEC/ANSI C63.19-2011)
DASY Configuration:

- Area Scan setting - Find Secondary Maximum Within:2.0dB and with a peak SAR value greater than 0.5 W/Kg
- Probe: EX3DV4 - SN3977;ConvF(9.78, 9.78, 9.78); Calibrated: 2014/2/17;
- Sensor-Surface: 2mm (Mechanical Surface Detection)
- Electronics: DAE4 Sn779;Calibrated: 2014/2/25
- Phantom: ELI v5.0;Type: QDOVA002AA;Serial: TP:1133
- Measurement SW: DASY52, Version 52.8 (7);SEMCAD X Version 14.6.10 (7164)

Flat/Area Scan (61x111x1):
Interpolated grid: dx=1.500 mm, dy=1.500 mm
Maximum value of SAR (interpolated) = 0.260 W/kg

Flat/Zoom Scan (5x5x7)/Cube 0:
Measurement grid: dx=8mm, dy=8mm, dz=5mm
Reference Value = 12.310 V/m; Power Drift = -0.01 dB
Peak SAR (extrapolated) = 0.294 W/kg
SAR(1 g) = 0.205 W/kg; SAR(10 g) = 0.137 W/kg
Maximum value of SAR (measured) = 0.251 W/kg

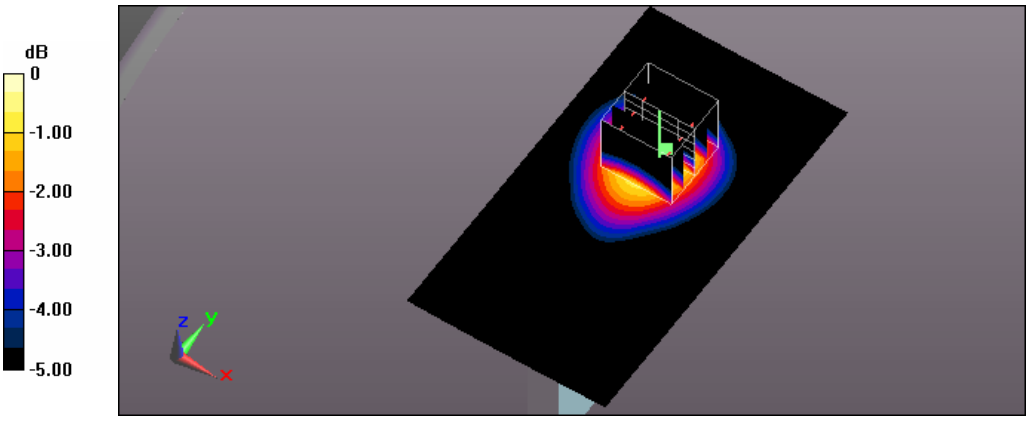

0 dB = 0.251 W/kg = -6.00 dBW/kg

Test Laboratory: A Test Lab Techno Corp.
Date: 2014/10/1Time: PM 04:50:29
124_Flat_LTE Band13 BW 10M CH23230_QPSK with 1 RB Size 0 RB Offset side 4 surface to phantom 10mm
DUT: AC785S-500;Type: WWAN Mobile Hotspot Portable Device;Serial: 014197000002053
Communication System: UID 0, Generic LTE (0);Frequency: 782 MHz;Duty Cycle: 1:1
Medium parameters used: f = 782 MHz; σ = 0.994 S/m; ε_r = 53.415; ρ = 1000 kg/m^3
Phantom section: Flat Section
Measurement Standard: DASY5 (IEEE/IEC/ANSI C63.19-2011)
DASY Configuration:

- Area Scan setting - Find Secondary Maximum Within:2.0dB and with a peak SAR value greater than 0.5 W/Kg
- Probe: EX3DV4 - SN3977;ConvF(9.78, 9.78, 9.78); Calibrated: 2014/2/17;
- Sensor-Surface: 2mm (Mechanical Surface Detection)
- Electronics: DAE4 Sn779;Calibrated: 2014/2/25
- Phantom: ELI v5.0;Type: QDOVA002AA;Serial: TP:1133
- Measurement SW: DASY52, Version 52.8 (7);SEMCAD X Version 14.6.10 (7164)

Flat/Area Scan (61x111x1):
Interpolated grid: dx=1.500 mm, dy=1.500 mm
Maximum value of SAR (interpolated) = 0.197 W/kg

Flat/Zoom Scan (5x5x7)/Cube 0:
Measurement grid: dx=8mm, dy=8mm, dz=5mm
Reference Value = 11.150 V/m; Power Drift = 0.10 dB
Peak SAR (extrapolated) = 0.233 W/kg
SAR(1 g) = 0.157 W/kg; SAR(10 g) = 0.102 W/kg
Maximum value of SAR (measured) = 0.196 W/kg

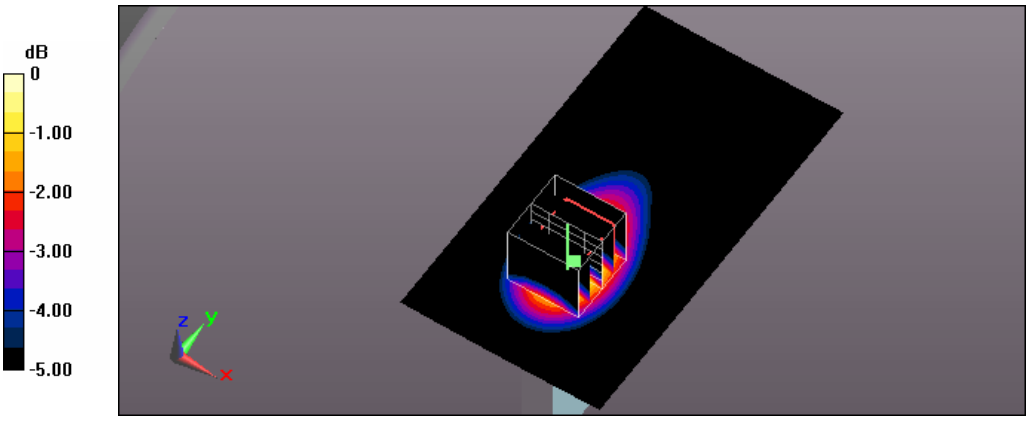

0 dB = 0.196 W/kg = -7.08 dBW/kg

Test Laboratory: A Test Lab Techno Corp.
Date: 2014/10/1Time: PM 06:58:00
125_Flat_LTE Band13 BW 10M CH23230_QPSK with 1 RB Size 0 RB Offset side 6 surface to phantom 10mm
DUT: AC785S-500;Type: WWAN Mobile Hotspot Portable Device;Serial: 014197000002053
Communication System: UID 0, Generic LTE (0);Frequency: 782 MHz;Duty Cycle: 1:1
Medium parameters used: f = 782 MHz; σ = 0.994 S/m; ε_r = 53.415; ρ = 1000 kg/m^3
Phantom section: Flat Section
Measurement Standard: DASY5 (IEEE/IEC/ANSI C63.19-2011)
DASY Configuration:

- Area Scan setting - Find Secondary Maximum Within:2.0dB and with a peak SAR value greater than 0.5 W/Kg
- Probe: EX3DV4 - SN3977;ConvF(9.78, 9.78, 9.78); Calibrated: 2014/2/17;
- Sensor-Surface: 2mm (Mechanical Surface Detection)
- Electronics: DAE4 Sn779;Calibrated: 2014/2/25
- Phantom: ELI v5.0;Type: QDOVA002AA;Serial: TP:1133
- Measurement SW: DASY52, Version 52.8 (7);SEMCAD X Version 14.6.10 (7164)

Flat/Area Scan (61x111x1):
Interpolated grid: dx=1.500 mm, dy=1.500 mm
Maximum value of SAR (interpolated) = 0.255 W/kg

Flat/Zoom Scan (5x5x7)/Cube 0:
Measurement grid: dx=8mm, dy=8mm, dz=5mm
Reference Value = 17.241 V/m; Power Drift = 0.06 dB
Peak SAR (extrapolated) = 0.381 W/kg
SAR(1 g) = 0.202 W/kg; SAR(10 g) = 0.109 W/kg
Maximum value of SAR (measured) = 0.295 W/kg

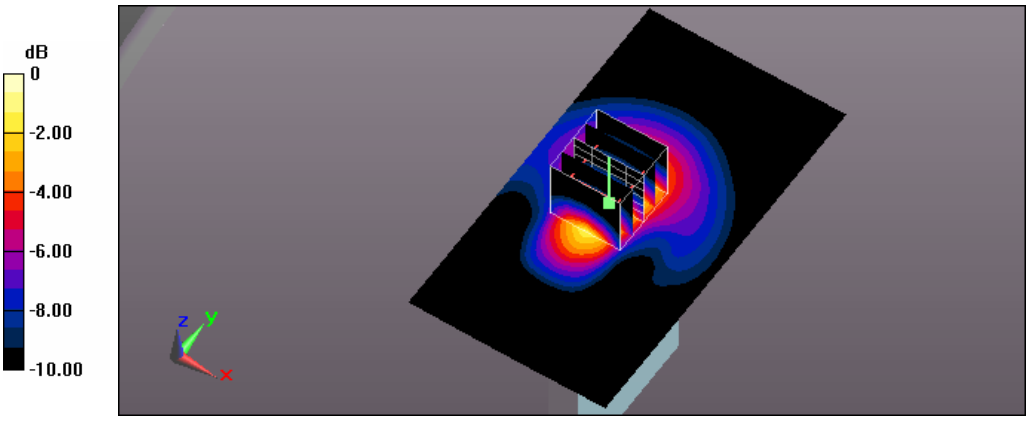

0 dB = 0.295 W/kg = -5.30 dBW/kg

Test Laboratory: A Test Lab Techno Corp.
Date: 2014/10/1Time: PM 02:54:18
126_Flat_LTE Band13 BW 10M CH23230_QPSK with 25 RB Size 0 RB Offset side 1 surface to phantom 10mm
DUT: AC785S-500;Type: WWAN Mobile Hotspot Portable Device;Serial: 014197000002053
Communication System: UID 0, Generic LTE (0);Frequency: 782 MHz;Duty Cycle: 1:1
Medium parameters used: f = 782 MHz; σ = 0.994 S/m; ε_r = 53.415; ρ = 1000 kg/m^3
Phantom section: Flat Section
Measurement Standard: DASY5 (IEEE/IEC/ANSI C63.19-2011)
DASY Configuration:

- Area Scan setting - Find Secondary Maximum Within:2.0dB and with a peak SAR value greater than 0.5 W/Kg
- Probe: EX3DV4 - SN3977;ConvF(9.78, 9.78, 9.78); Calibrated: 2014/2/17;
- Sensor-Surface: 2mm (Mechanical Surface Detection)
- Electronics: DAE4 Sn779;Calibrated: 2014/2/25
- Phantom: ELI v5.0;Type: QDOVA002AA;Serial: TP:1133
- Measurement SW: DASY52, Version 52.8 (7);SEMCAD X Version 14.6.10 (7164)

Flat/Area Scan (71x111x1):
Interpolated grid: dx=1.500 mm, dy=1.500 mm
Maximum value of SAR (interpolated) = 0.973 W/kg

Flat/Zoom Scan (5x5x7)/Cube 0:
Measurement grid: dx=8mm, dy=8mm, dz=5mm
Reference Value = 17.440 V/m; Power Drift = -0.12 dB
Peak SAR (extrapolated) = 1.16 W/kg
SAR(1 g) = 0.726 W/kg; SAR(10 g) = 0.452 W/kg
Maximum value of SAR (measured) = 0.956 W/kg

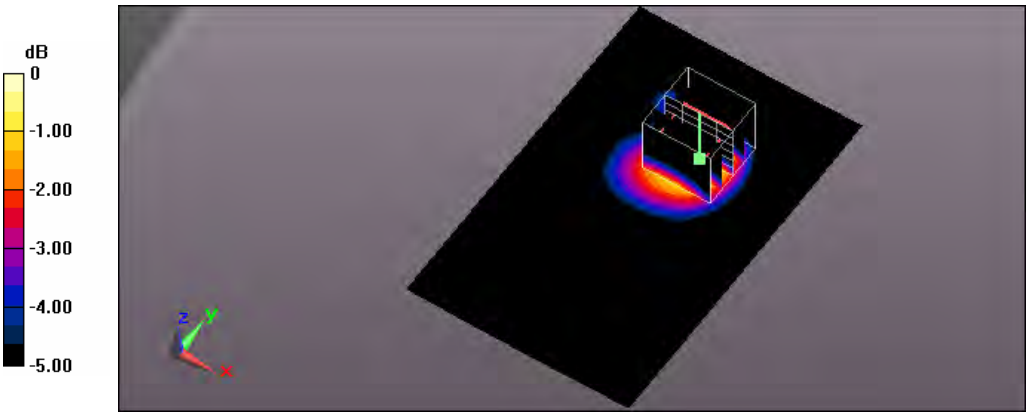

0 dB = 0.956 W/kg = -0.20 dBW/kg

Test Laboratory: A Test Lab Techno Corp.
Date: 2014/10/1Time: PM 03:15:50
127_Flat_LTE Band13 BW 10M CH23230_QPSK with 25 RB Size 0 RB Offset side 2 surface to phantom 10mm
DUT: AC785S-500;Type: WWAN Mobile Hotspot Portable Device;Serial: 014197000002053
Communication System: UID 0, Generic LTE (0);Frequency: 782 MHz;Duty Cycle: 1:1
Medium parameters used: f = 782 MHz; σ = 0.994 S/m; ε_r = 53.415; ρ = 1000 kg/m^3
Phantom section: Flat Section
Measurement Standard: DASY5 (IEEE/IEC/ANSI C63.19-2011)
DASY Configuration:

- Area Scan setting - Find Secondary Maximum Within:2.0dB and with a peak SAR value greater than 0.5 W/Kg
- Probe: EX3DV4 - SN3977;ConvF(9.78, 9.78, 9.78); Calibrated: 2014/2/17;
- Sensor-Surface: 2mm (Mechanical Surface Detection)
- Electronics: DAE4 Sn779;Calibrated: 2014/2/25
- Phantom: ELI v5.0;Type: QDOVA002AA;Serial: TP:1133
- Measurement SW: DASY52, Version 52.8 (7);SEMCAD X Version 14.6.10 (7164)

Flat/Area Scan (71x111x1):
Interpolated grid: dx=1.500 mm, dy=1.500 mm
Maximum value of SAR (interpolated) = 0.644 W/kg

Flat/Zoom Scan (5x5x7)/Cube 0:
Measurement grid: dx=8mm, dy=8mm, dz=5mm
Reference Value = 16.305 V/m; Power Drift = 0.06 dB
Peak SAR (extrapolated) = 0.761 W/kg
SAR(1 g) = 0.510 W/kg; SAR(10 g) = 0.338 W/kg
Maximum value of SAR (measured) = 0.643 W/kg

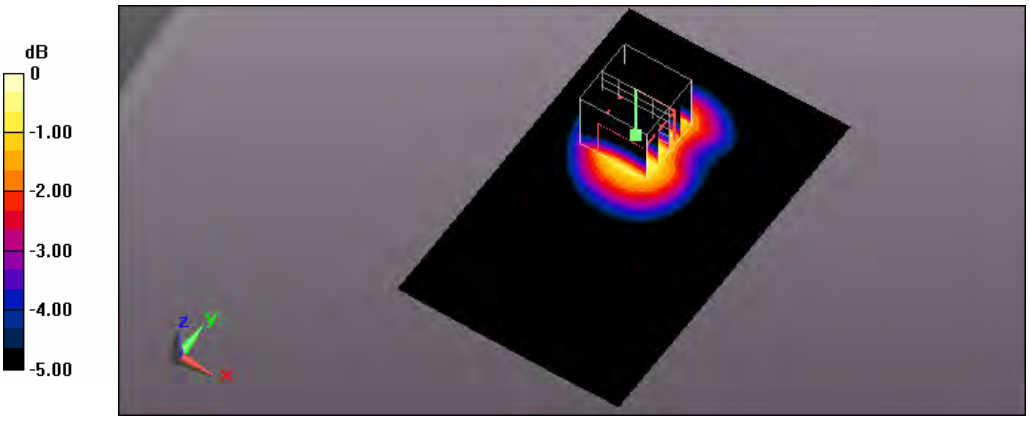

0 dB = 0.643 W/kg = -1.92 dBW/kg

Test Laboratory: A Test Lab Techno Corp.
Date: 2014/10/1Time: PM 04:30:58
128_Flat_LTE Band13 BW 10M CH23230_QPSK with 25 RB Size 0 RB Offset side 3 surface to phantom 10mm
DUT: AC785S-500;Type: WWAN Mobile Hotspot Portable Device;Serial: 014197000002053
Communication System: UID 0, Generic LTE (0);Frequency: 782 MHz;Duty Cycle: 1:1
Medium parameters used: f = 782 MHz; σ = 0.994 S/m; ε_r = 53.415; ρ = 1000 kg/m^3
Phantom section: Flat Section
Measurement Standard: DASY5 (IEEE/IEC/ANSI C63.19-2011)
DASY Configuration:

- Area Scan setting - Find Secondary Maximum Within:2.0dB and with a peak SAR value greater than 0.5 W/Kg
- Probe: EX3DV4 - SN3977;ConvF(9.78, 9.78, 9.78); Calibrated: 2014/2/17;
- Sensor-Surface: 2mm (Mechanical Surface Detection)
- Electronics: DAE4 Sn779;Calibrated: 2014/2/25
- Phantom: ELI v5.0;Type: QDOVA002AA;Serial: TP:1133
- Measurement SW: DASY52, Version 52.8 (7);SEMCAD X Version 14.6.10 (7164)

Flat/Area Scan (61x111x1):
Interpolated grid: dx=1.500 mm, dy=1.500 mm
Maximum value of SAR (interpolated) = 0.221 W/kg

Flat/Zoom Scan (5x5x7)/Cube 0:
Measurement grid: dx=8mm, dy=8mm, dz=5mm
Reference Value = 11.445 V/m; Power Drift = 0.18 dB
Peak SAR (extrapolated) = 0.251 W/kg
SAR(1 g) = 0.176 W/kg; SAR(10 g) = 0.119 W/kg
Maximum value of SAR (measured) = 0.214 W/kg

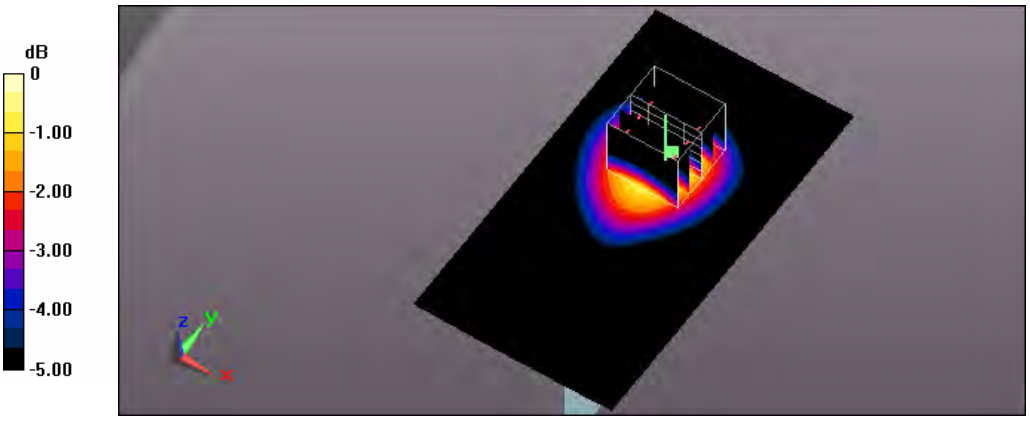

0 dB = 0.214 W/kg = -6.70 dBW/kg

Test Laboratory: A Test Lab Techno Corp.
Date: 2014/10/1Time: PM 05:09:06
129_Flat_LTE Band13 BW 10M CH23230_QPSK with 25 RB Size 0 RB Offset side 4 surface to phantom 10mm
DUT: AC785S-500;Type: WWAN Mobile Hotspot Portable Device;Serial: 014197000002053
Communication System: UID 0, Generic LTE (0);Frequency: 782 MHz;Duty Cycle: 1:1
Medium parameters used: f = 782 MHz; σ = 0.994 S/m; ε_r = 53.415; ρ = 1000 kg/m^3
Phantom section: Flat Section
Measurement Standard: DASY5 (IEEE/IEC/ANSI C63.19-2011)
DASY Configuration:

- Area Scan setting - Find Secondary Maximum Within:2.0dB and with a peak SAR value greater than 0.5 W/Kg
- Probe: EX3DV4 - SN3977;ConvF(9.78, 9.78, 9.78); Calibrated: 2014/2/17;
- Sensor-Surface: 2mm (Mechanical Surface Detection)
- Electronics: DAE4 Sn779;Calibrated: 2014/2/25
- Phantom: ELI v5.0;Type: QDOVA002AA;Serial: TP:1133
- Measurement SW: DASY52, Version 52.8 (7);SEMCAD X Version 14.6.10 (7164)

Flat/Area Scan (61x111x1):
Interpolated grid: dx=1.500 mm, dy=1.500 mm
Maximum value of SAR (interpolated) = 0.174 W/kg

Flat/Zoom Scan (5x5x7)/Cube 0:
Measurement grid: dx=8mm, dy=8mm, dz=5mm
Reference Value = 10.694 V/m; Power Drift = 0.05 dB
Peak SAR (extrapolated) = 0.204 W/kg
SAR(1 g) = 0.137 W/kg; SAR(10 g) = 0.089 W/kg
Maximum value of SAR (measured) = 0.172 W/kg

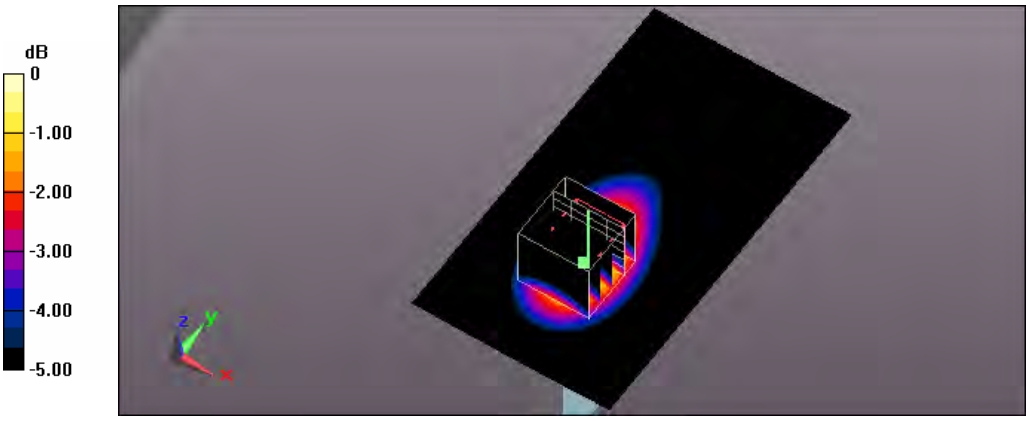

0 dB = 0.172 W/kg = -7.64 dBW/kg

Test Laboratory: A Test Lab Techno Corp.
Date: 2014/10/1Time: PM 06:38:02
130_Flat_LTE Band13 BW 10M CH23230_QPSK with 25 RB Size 0 RB Offset side 6 surface to phantom 10mm
DUT: AC785S-500;Type: WWAN Mobile Hotspot Portable Device;Serial: 014197000002053
Communication System: UID 0, Generic LTE (0);Frequency: 782 MHz;Duty Cycle: 1:1
Medium parameters used: f = 782 MHz; σ = 0.994 S/m; ε_r = 53.415; ρ = 1000 kg/m^3
Phantom section: Flat Section
Measurement Standard: DASY5 (IEEE/IEC/ANSI C63.19-2011)
DASY Configuration:

- Area Scan setting - Find Secondary Maximum Within:2.0dB and with a peak SAR value greater than 0.5 W/Kg
- Probe: EX3DV4 - SN3977;ConvF(9.78, 9.78, 9.78); Calibrated: 2014/2/17;
- Sensor-Surface: 2mm (Mechanical Surface Detection)
- Electronics: DAE4 Sn779;Calibrated: 2014/2/25
- Phantom: ELI v5.0;Type: QDOVA002AA;Serial: TP:1133
- Measurement SW: DASY52, Version 52.8 (7);SEMCAD X Version 14.6.10 (7164)

Flat/Area Scan (61x111x1):
Interpolated grid: dx=1.500 mm, dy=1.500 mm
Maximum value of SAR (interpolated) = 0.201 W/kg

Flat/Zoom Scan (5x5x7)/Cube 0:
Measurement grid: dx=8mm, dy=8mm, dz=5mm
Reference Value = 15.363 V/m; Power Drift = 0.03 dB
Peak SAR (extrapolated) = 0.305 W/kg
SAR(1 g) = 0.161 W/kg; SAR(10 g) = 0.087 W/kg
Maximum value of SAR (measured) = 0.236 W/kg

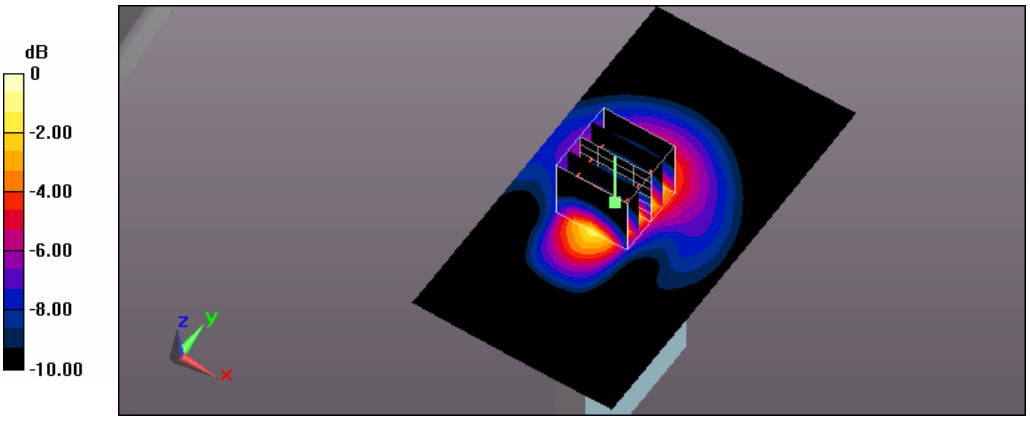

0 dB = 0.236 W/kg = -6.27 dBW/kg

Test Laboratory: A Test Lab Techno Corp.
Date: 2014/10/1Time: PM 07:22:07
179_Flat_LTE Band13 BW 10M CH23230_QPSK with 50 RB Size 0 RB Offset side 1 surface to phantom 10mm
DUT: AC785S-500;Type: WWAN Mobile Hotspot Portable Device;Serial: 014197000002053
Communication System: UID 0, Generic LTE (0);Frequency: 782 MHz;Duty Cycle: 1:1
Medium parameters used: f = 782 MHz; σ = 0.994 S/m; ε_r = 53.415; ρ = 1000 kg/m^3
Phantom section: Flat Section
Measurement Standard: DASY5 (IEEE/IEC/ANSI C63.19-2011)
DASY Configuration:

- Area Scan setting - Find Secondary Maximum Within:2.0dB and with a peak SAR value greater than 0.5 W/Kg
- Probe: EX3DV4 - SN3977;ConvF(9.78, 9.78, 9.78); Calibrated: 2014/2/17;
- Sensor-Surface: 2mm (Mechanical Surface Detection)
- Electronics: DAE4 Sn779;Calibrated: 2014/2/25
- Phantom: ELI v5.0;Type: QDOVA002AA;Serial: TP:1133
- Measurement SW: DASY52, Version 52.8 (7);SEMCAD X Version 14.6.10 (7164)

Flat/Area Scan (71x111x1):
Interpolated grid: dx=1.500 mm, dy=1.500 mm
Maximum value of SAR (interpolated) = 1.05 W/kg

Flat/Zoom Scan (5x5x7)/Cube 0:
Measurement grid: dx=8mm, dy=8mm, dz=5mm
Reference Value = 18.400 V/m; Power Drift = 0.11 dB
Peak SAR (extrapolated) = 1.30 W/kg
SAR(1 g) = 0.812 W/kg; SAR(10 g) = 0.506 W/kg
Maximum value of SAR (measured) = 1.07 W/kg

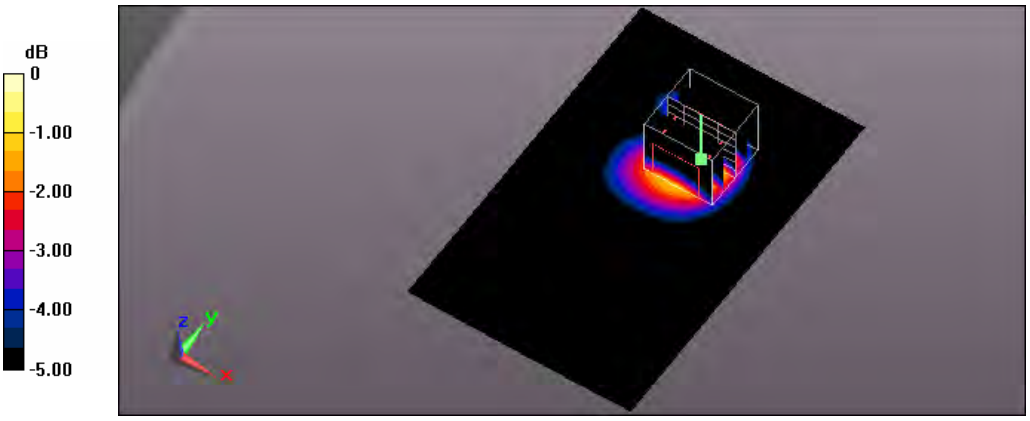

0 dB = 1.07 W/kg = 0.29 dBW/kg

Test Laboratory: A Test Lab Techno Corp.
Date: 2014/11/16Time: PM 04:39:43
132_Flat_LTE Band17 BW 10M CH23780_QPSK with 1 RB Size 0 RB Offset side 2 surface to phantom 10mm
DUT: AC785S-500;Type: WWAN Mobile Hotspot Portable Device;Serial: 014197000002053
Communication System: UID 0, Generic LTE (0);Frequency: 709 MHz;Duty Cycle: 1:1
Medium parameters used: f = 709 MHz; σ = 0.946 S/m; ε_r = 54.006; ρ = 1000 kg/m^3
Phantom section: Flat Section
Measurement Standard: DASY5 (IEEE/IEC/ANSI C63.19-2011)
DASY Configuration:

- Area Scan setting - Find Secondary Maximum Within:2.0dB and with a peak SAR value greater than 0.5 W/Kg
- Probe: EX3DV4 - SN3977;ConvF(9.78, 9.78, 9.78); Calibrated: 2014/2/17;
- Sensor-Surface: 2mm (Mechanical Surface Detection)
- Electronics: DAE4 Sn779;Calibrated: 2014/2/25
- Phantom: ELI v5.0;Type: QDOVA002AA;Serial: TP:1133
- Measurement SW: DASY52, Version 52.8 (7);SEMCAD X Version 14.6.10 (7164)

Flat/Area Scan (71x111x1):
Interpolated grid: dx=1.500 mm, dy=1.500 mm
Maximum value of SAR (interpolated) = 0.974 W/kg

Flat/Zoom Scan (5x5x7)/Cube 0:
Measurement grid: dx=8mm, dy=8mm, dz=5mm
Reference Value = 28.334 V/m; Power Drift = 0.06 dB
Peak SAR (extrapolated) = 1.12 W/kg
SAR(1 g) = 0.802 W/kg; SAR(10 g) = 0.561 W/kg
Maximum value of SAR (measured) = 0.975 W/kg

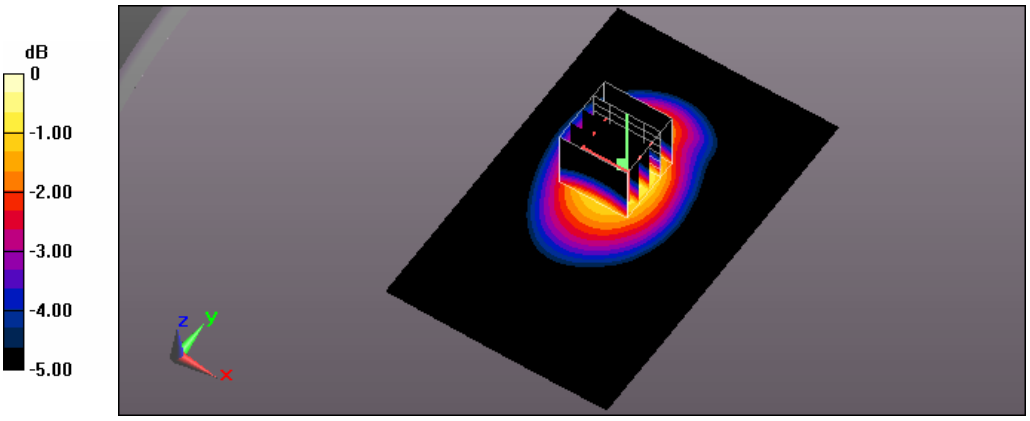

0 dB = 0.975 W/kg = -0.11 dBW/kg

Test Laboratory: A Test Lab Techno Corp.
Date: 2014/11/17Time: PM 03:45:34
133_Flat_LTE Band17 BW 10M CH23780_QPSK with 1 RB Size 0 RB Offset side 3 surface to phantom 10mm
DUT: AC785S-500;Type: WWAN Mobile Hotspot Portable Device;Serial: 014197000002053
Communication System: UID 0, Generic LTE (0);Frequency: 709 MHz;Duty Cycle: 1:1
Medium parameters used: f = 709 MHz; σ = 0.946 S/m; ε_r = 54.006; ρ = 1000 kg/m^3
Phantom section: Flat Section
Measurement Standard: DASY5 (IEEE/IEC/ANSI C63.19-2011)
DASY Configuration:

- Area Scan setting - Find Secondary Maximum Within:2.0dB and with a peak SAR value greater than 0.5 W/Kg
- Probe: EX3DV4 - SN3977;ConvF(9.78, 9.78, 9.78); Calibrated: 2014/2/17;
- Sensor-Surface: 2mm (Mechanical Surface Detection)
- Electronics: DAE4 Sn779;Calibrated: 2014/2/25
- Phantom: ELI v5.0;Type: QDOVA002AA;Serial: TP:1133
- Measurement SW: DASY52, Version 52.8 (7);SEMCAD X Version 14.6.10 (7164)

Flat/Area Scan (61x111x1):
Interpolated grid: dx=1.500 mm, dy=1.500 mm
Maximum value of SAR (interpolated) = 0.387 W/kg

Flat/Zoom Scan (5x5x7)/Cube 0:
Measurement grid: dx=8mm, dy=8mm, dz=5mm
Reference Value = 19.806 V/m; Power Drift = -0.03 dB
Peak SAR (extrapolated) = 0.442 W/kg
SAR(1 g) = 0.318 W/kg; SAR(10 g) = 0.223 W/kg
Maximum value of SAR (measured) = 0.386 W/kg

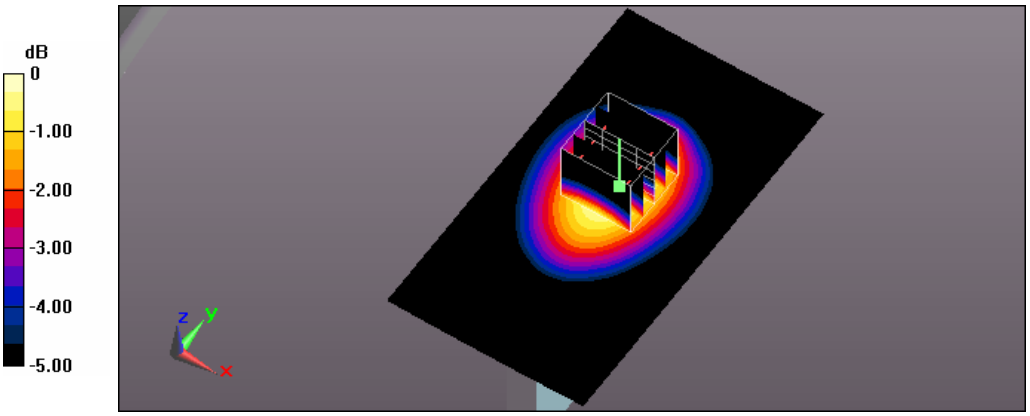

0 dB = 0.386 W/kg = -4.13 dBW/kg

Test Laboratory: A Test Lab Techno Corp.
Date: 2014/11/17Time: PM 05:20:27
134_Flat_LTE Band17 BW 10M CH23780_QPSK with 1 RB Size 0 RB Offset side 4 surface to phantom 10mm
DUT: AC785S-500;Type: WWAN Mobile Hotspot Portable Device;Serial: 014197000002053
Communication System: UID 0, Generic LTE (0);Frequency: 709 MHz;Duty Cycle: 1:1
Medium parameters used: f = 709 MHz; σ = 0.946 S/m; ε_r = 54.006; ρ = 1000 kg/m^3
Phantom section: Flat Section
Measurement Standard: DASY5 (IEEE/IEC/ANSI C63.19-2011)
DASY Configuration:

- Area Scan setting - Find Secondary Maximum Within:2.0dB and with a peak SAR value greater than 0.5 W/Kg
- Probe: EX3DV4 - SN3977;ConvF(9.78, 9.78, 9.78); Calibrated: 2014/2/17;
- Sensor-Surface: 2mm (Mechanical Surface Detection)
- Electronics: DAE4 Sn779;Calibrated: 2014/2/25
- Phantom: ELI v5.0;Type: QDOVA002AA;Serial: TP:1133
- Measurement SW: DASY52, Version 52.8 (7);SEMCAD X Version 14.6.10 (7164)

Flat/Area Scan (61x111x1):
Interpolated grid: dx=1.500 mm, dy=1.500 mm
Maximum value of SAR (interpolated) = 0.430 W/kg

Flat/Zoom Scan (5x5x7)/Cube 0:
Measurement grid: dx=8mm, dy=8mm, dz=5mm
Reference Value = 21.309 V/m; Power Drift = 0.01 dB
Peak SAR (extrapolated) = 0.504 W/kg
SAR(1 g) = 0.351 W/kg; SAR(10 g) = 0.239 W/kg
Maximum value of SAR (measured) = 0.434 W/kg

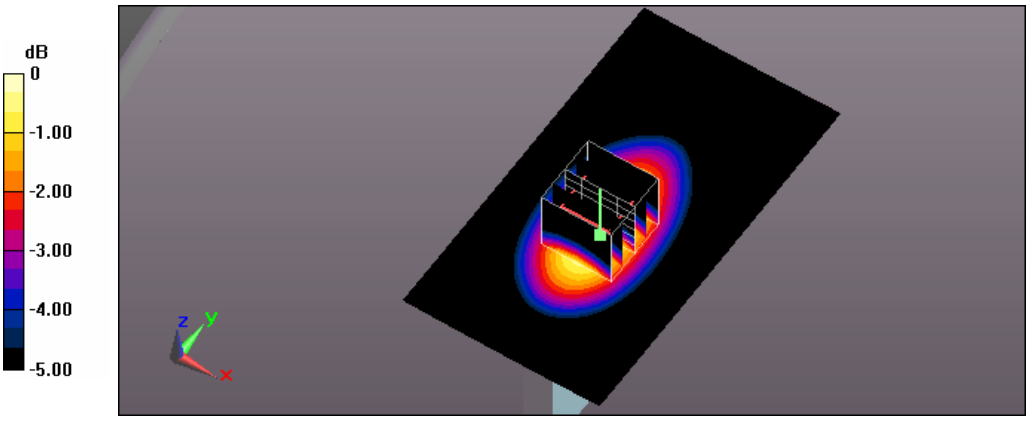

0 dB = 0.434 W/kg = -3.63 dBW/kg

Test Laboratory: A Test Lab Techno Corp.
Date: 2014/11/17Time: PM 08:41:56
135_Flat_LTE Band17 BW 10M CH23780_QPSK with 1 RB Size 0 RB Offset side 6 surface to phantom 10mm
DUT: AC785S-500;Type: WWAN Mobile Hotspot Portable Device;Serial: 014197000002053
Communication System: UID 0, Generic LTE (0);Frequency: 709 MHz;Duty Cycle: 1:1
Medium parameters used: f = 709 MHz; σ = 0.946 S/m; ε_r = 54.006; ρ = 1000 kg/m^3
Phantom section: Flat Section
Measurement Standard: DASY5 (IEEE/IEC/ANSI C63.19-2011)
DASY Configuration:

- Area Scan setting - Find Secondary Maximum Within:2.0dB and with a peak SAR value greater than 0.5 W/Kg
- Probe: EX3DV4 - SN3977;ConvF(9.78, 9.78, 9.78); Calibrated: 2014/2/17;
- Sensor-Surface: 2mm (Mechanical Surface Detection)
- Electronics: DAE4 Sn779;Calibrated: 2014/2/25
- Phantom: ELI v5.0;Type: QDOVA002AA;Serial: TP:1133
- Measurement SW: DASY52, Version 52.8 (7);SEMCAD X Version 14.6.10 (7164)

Flat/Area Scan (61x111x1):
Interpolated grid: dx=1.500 mm, dy=1.500 mm
Maximum value of SAR (interpolated) = 0.126 W/kg

Flat/Zoom Scan (5x5x7)/Cube 0:
Measurement grid: dx=8mm, dy=8mm, dz=5mm
Reference Value = 11.789 V/m; Power Drift = 0.05 dB
Peak SAR (extrapolated) = 0.165 W/kg
SAR(1 g) = 0.089 W/kg; SAR(10 g) = 0.051 W/kg
Maximum value of SAR (measured) = 0.128 W/kg

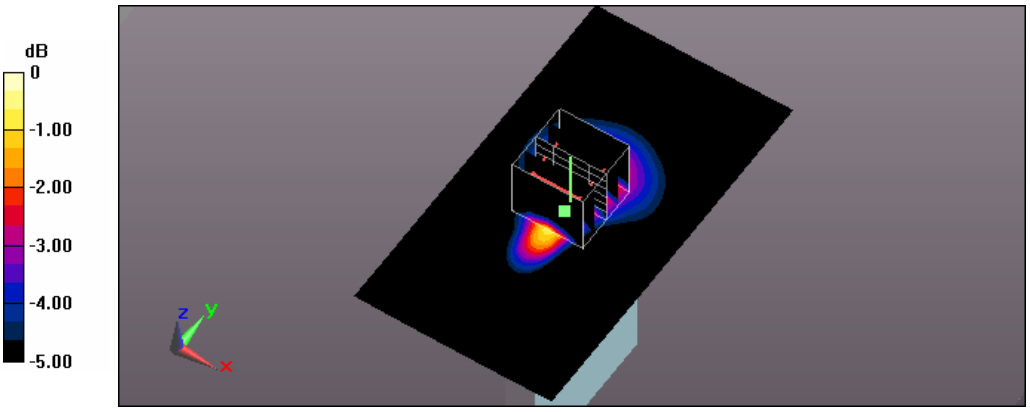

0 dB = 0.128 W/kg = -8.93 dBW/kg

Test Laboratory: A Test Lab Techno Corp.
Date: 2014/11/16Time: PM 01:35:46
131_Flat_LTE Band17 BW 10M CH23780_QPSK with 1 RB Size 0 RB Offset side 1 surface to phantom 10mm
DUT: AC785S-500;Type: WWAN Mobile Hotspot Portable Device;Serial: 014197000002053
Communication System: UID 0, Generic LTE (0);Frequency: 709 MHz;Duty Cycle: 1:1
Medium parameters used: f = 709 MHz; σ = 0.946 S/m; ε_r = 54.006; ρ = 1000 kg/m^3
Phantom section: Flat Section
Measurement Standard: DASY5 (IEEE/IEC/ANSI C63.19-2011)
DASY Configuration:

- Area Scan setting - Find Secondary Maximum Within:2.0dB and with a peak SAR value greater than 0.5 W/Kg
- Probe: EX3DV4 - SN3977;ConvF(9.78, 9.78, 9.78); Calibrated: 2014/2/17;
- Sensor-Surface: 2mm (Mechanical Surface Detection)
- Electronics: DAE4 Sn779;Calibrated: 2014/2/25
- Phantom: ELI v5.0;Type: QDOVA002AA;Serial: TP:1133
- Measurement SW: DASY52, Version 52.8 (7);SEMCAD X Version 14.6.10 (7164)

Flat/Area Scan (71x111x1):
Interpolated grid: dx=1.500 mm, dy=1.500 mm
Maximum value of SAR (interpolated) = 1.19 W/kg

Flat/Zoom Scan (5x5x7)/Cube 0:
Measurement grid: dx=8mm, dy=8mm, dz=5mm
Reference Value = 30.775 V/m; Power Drift = -0.01 dB
Peak SAR (extrapolated) = 1.43 W/kg
SAR(1 g) = 0.980 W/kg; SAR(10 g) = 0.672 W/kg
Maximum value of SAR (measured) = 1.21 W/kg

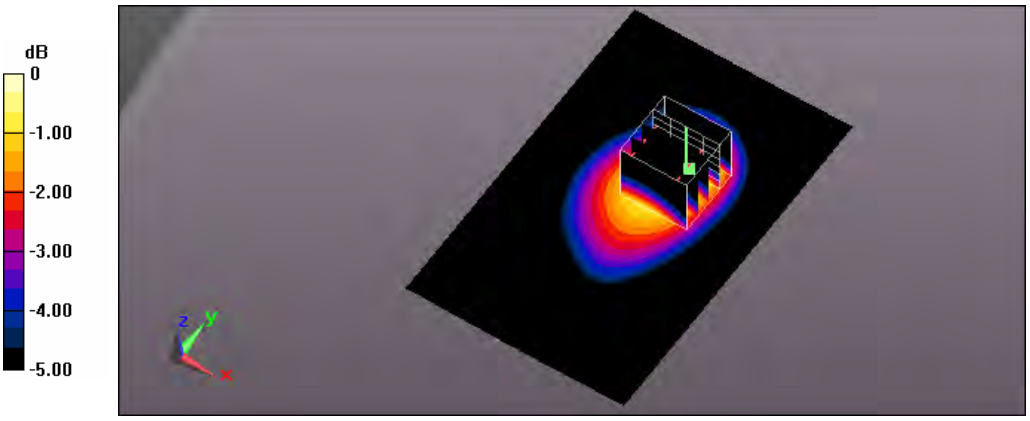

0 dB = 1.21 W/kg = 0.83 dBW/kg

Test Laboratory: A Test Lab Techno Corp.
Date: 2014/11/16Time: PM 01:56:26
182_Flat_LTE Band17 BW 10M CH23790_QPSK with 1 RB Size 0 RB Offset side 1 surface to phantom 10mm
DUT: AC785S-500;Type: WWAN Mobile Hotspot Portable Device;Serial: 014197000002053
Communication System: UID 0, Generic LTE (0);Frequency: 710 MHz;Duty Cycle: 1:1
Medium parameters used: f = 710 MHz; σ = 0.947 S/m; ε_r = 53.998; ρ = 1000 kg/m^3
Phantom section: Flat Section
Measurement Standard: DASY5 (IEEE/IEC/ANSI C63.19-2011)
DASY Configuration:

- Area Scan setting - Find Secondary Maximum Within:2.0dB and with a peak SAR value greater than 0.5 W/Kg
- Probe: EX3DV4 - SN3977;ConvF(9.78, 9.78, 9.78); Calibrated: 2014/2/17;
- Sensor-Surface: 2mm (Mechanical Surface Detection)
- Electronics: DAE4 Sn779;Calibrated: 2014/2/25
- Phantom: ELI v5.0;Type: QDOVA002AA;Serial: TP:1133
- Measurement SW: DASY52, Version 52.8 (7);SEMCAD X Version 14.6.10 (7164)

Flat/Area Scan (71x111x1):
Interpolated grid: dx=1.500 mm, dy=1.500 mm
Maximum value of SAR (interpolated) = 1.20 W/kg

Flat/Zoom Scan (5x5x7)/Cube 0:
Measurement grid: dx=8mm, dy=8mm, dz=5mm
Reference Value = 30.569 V/m; Power Drift = -0.01 dB
Peak SAR (extrapolated) = 1.41 W/kg
SAR(1 g) = 0.964 W/kg; SAR(10 g) = 0.661 W/kg
Maximum value of SAR (measured) = 1.20 W/kg

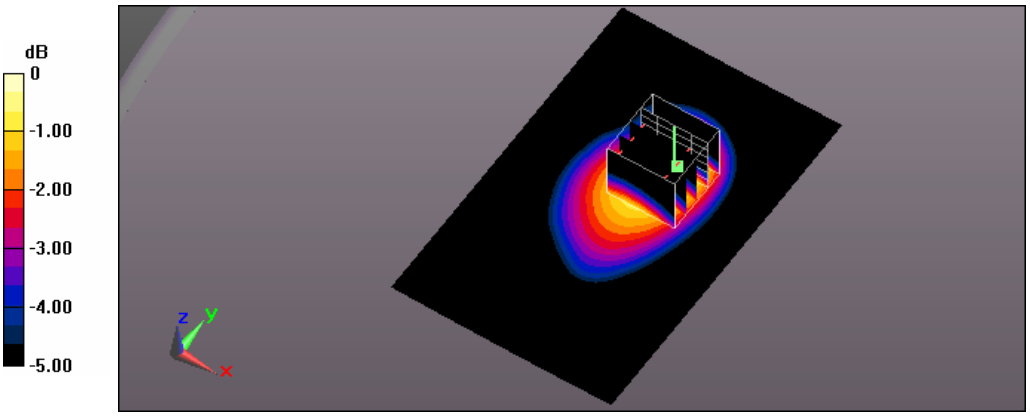

0 dB = 1.20 W/kg = 0.79 dBW/kg

Test Laboratory: A Test Lab Techno Corp.
Date: 2014/11/16Time: PM 05:00:04
186_Flat_LTE Band17 BW 10M CH23790_QPSK with 1 RB Size 0 RB Offset side 2 surface to phantom 10mm
DUT: AC785S-500;Type: WWAN Mobile Hotspot Portable Device;Serial: 014197000002053
Communication System: UID 0, Generic LTE (0);Frequency: 710 MHz;Duty Cycle: 1:1
Medium parameters used: f = 710 MHz; σ = 0.947 S/m; ε_r = 53.998; ρ = 1000 kg/m^3
Phantom section: Flat Section
Measurement Standard: DASY5 (IEEE/IEC/ANSI C63.19-2011)
DASY Configuration:

- Area Scan setting - Find Secondary Maximum Within:2.0dB and with a peak SAR value greater than 0.5 W/Kg
- Probe: EX3DV4 - SN3977;ConvF(9.78, 9.78, 9.78); Calibrated: 2014/2/17;
- Sensor-Surface: 2mm (Mechanical Surface Detection)
- Electronics: DAE4 Sn779;Calibrated: 2014/2/25
- Phantom: ELI v5.0;Type: QDOVA002AA;Serial: TP:1133
- Measurement SW: DASY52, Version 52.8 (7);SEMCAD X Version 14.6.10 (7164)

Flat/Area Scan (71x111x1):
Interpolated grid: dx=1.500 mm, dy=1.500 mm
Maximum value of SAR (interpolated) = 0.959 W/kg

Flat/Zoom Scan (5x5x7)/Cube 0:
Measurement grid: dx=8mm, dy=8mm, dz=5mm
Reference Value = 28.187 V/m; Power Drift = 0.01 dB
Peak SAR (extrapolated) = 1.10 W/kg
SAR(1 g) = 0.786 W/kg; SAR(10 g) = 0.550 W/kg
Maximum value of SAR (measured) = 0.954 W/kg

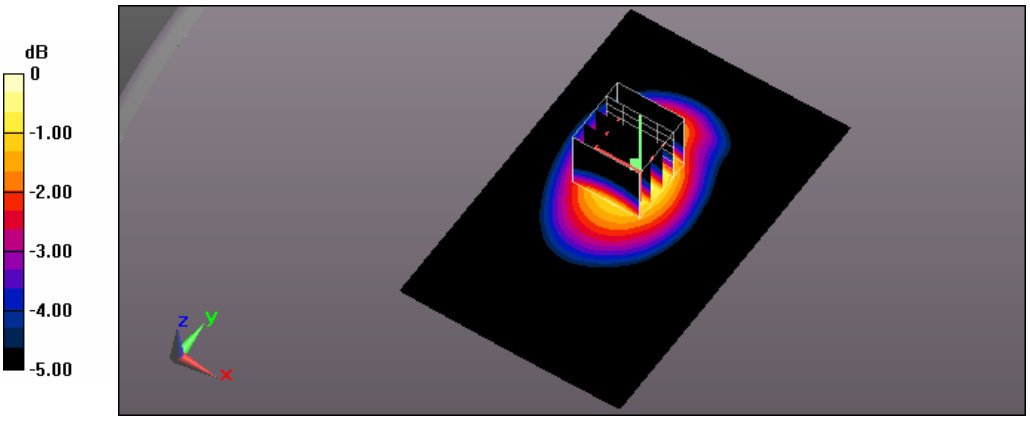

0 dB = 0.954 W/kg = -0.20 dBW/kg

Test Laboratory: A Test Lab Techno Corp.
Date: 2014/11/16Time: PM 02:15:38
183_Flat_LTE Band17 BW 10M CH23800_QPSK with 1 RB Size 0 RB Offset side 1 surface to phantom 10mm
DUT: AC785S-500;Type: WWAN Mobile Hotspot Portable Device;Serial: 014197000002053
Communication System: UID 0, Generic LTE (0);Frequency: 711 MHz;Duty Cycle: 1:1
Medium parameters used: f = 711 MHz; σ = 0.948 S/m; ε_r = 53.992; ρ = 1000 kg/m^3
Phantom section: Flat Section
Measurement Standard: DASY5 (IEEE/IEC/ANSI C63.19-2011)
DASY Configuration:

- Area Scan setting - Find Secondary Maximum Within:2.0dB and with a peak SAR value greater than 0.5 W/Kg
- Probe: EX3DV4 - SN3977;ConvF(9.78, 9.78, 9.78); Calibrated: 2014/2/17;
- Sensor-Surface: 2mm (Mechanical Surface Detection)
- Electronics: DAE4 Sn779;Calibrated: 2014/2/25
- Phantom: ELI v5.0;Type: QDOVA002AA;Serial: TP:1133
- Measurement SW: DASY52, Version 52.8 (7);SEMCAD X Version 14.6.10 (7164)

Flat/Area Scan (71x111x1):
Interpolated grid: dx=1.500 mm, dy=1.500 mm
Maximum value of SAR (interpolated) = 1.20 W/kg

Flat/Zoom Scan (5x5x7)/Cube 0:
Measurement grid: dx=8mm, dy=8mm, dz=5mm
Reference Value = 30.736 V/m; Power Drift = -0.03 dB
Peak SAR (extrapolated) = 1.42 W/kg
SAR(1 g) = 0.969 W/kg; SAR(10 g) = 0.664 W/kg
Maximum value of SAR (measured) = 1.20 W/kg

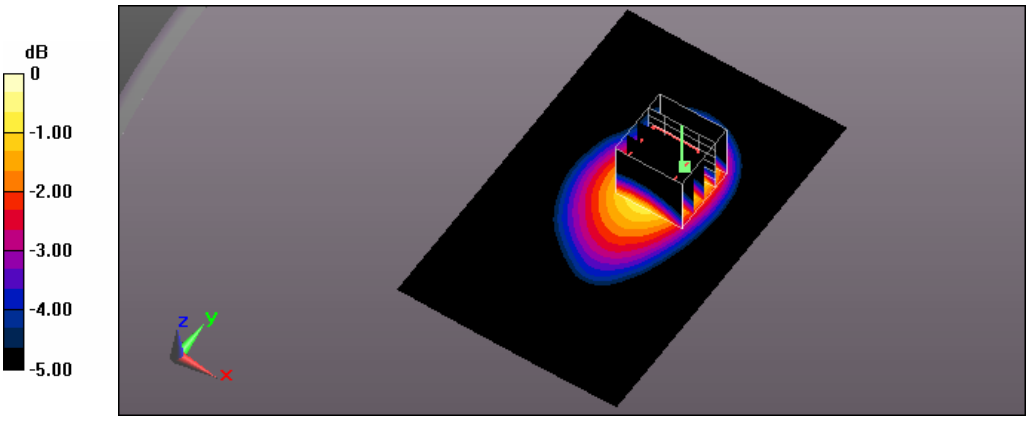

0 dB = 1.20 W/kg = 0.79 dBW/kg

Test Laboratory: A Test Lab Techno Corp.
Date: 2014/11/16Time: PM 05:25:40
187_Flat_LTE Band17 BW 10M CH23800_QPSK with 1 RB Size 0 RB Offset side 2 surface to phantom 10mm
DUT: AC785S-500;Type: WWAN Mobile Hotspot Portable Device;Serial: 014197000002053
Communication System: UID 0, Generic LTE (0);Frequency: 711 MHz;Duty Cycle: 1:1
Medium parameters used: f = 711 MHz; σ = 0.948 S/m; ε_r = 53.992; ρ = 1000 kg/m^3
Phantom section: Flat Section
Measurement Standard: DASY5 (IEEE/IEC/ANSI C63.19-2011)
DASY Configuration:

- Area Scan setting - Find Secondary Maximum Within:2.0dB and with a peak SAR value greater than 0.5 W/Kg
- Probe: EX3DV4 - SN3977;ConvF(9.78, 9.78, 9.78); Calibrated: 2014/2/17;
- Sensor-Surface: 2mm (Mechanical Surface Detection)
- Electronics: DAE4 Sn779;Calibrated: 2014/2/25
- Phantom: ELI v5.0;Type: QDOVA002AA;Serial: TP:1133
- Measurement SW: DASY52, Version 52.8 (7);SEMCAD X Version 14.6.10 (7164)

Flat/Area Scan (71x111x1):
Interpolated grid: dx=1.500 mm, dy=1.500 mm
Maximum value of SAR (interpolated) = 0.935 W/kg

Flat/Zoom Scan (5x5x7)/Cube 0:
Measurement grid: dx=8mm, dy=8mm, dz=5mm
Reference Value = 28.084 V/m; Power Drift = -0.02 dB
Peak SAR (extrapolated) = 1.08 W/kg
SAR(1 g) = 0.777 W/kg; SAR(10 g) = 0.545 W/kg
Maximum value of SAR (measured) = 0.946 W/kg

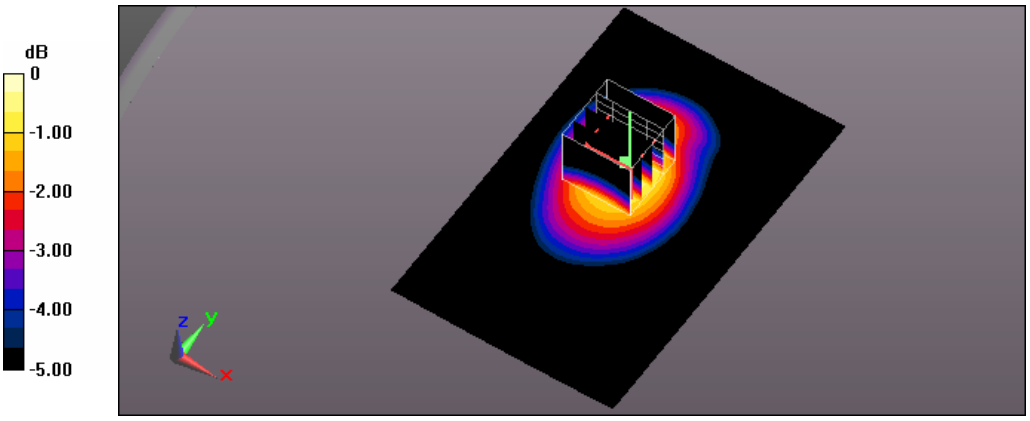

0 dB = 0.946 W/kg = -0.24 dBW/kg

Test Laboratory: A Test Lab Techno Corp.
Date: 2014/11/16Time: PM 02:55:09
136_Flat_LTE Band17 BW 10M CH23790_QPSK with 25 RB Size 0 RB Offset side 1 surface to phantom 10mm
DUT: AC785S-500;Type: WWAN Mobile Hotspot Portable Device;Serial: 014197000002053
Communication System: UID 0, Generic LTE (0);Frequency: 710 MHz;Duty Cycle: 1:1
Medium parameters used: f = 710 MHz; σ = 0.947 S/m; ε_r = 53.998; ρ = 1000 kg/m^3
Phantom section: Flat Section
Measurement Standard: DASY5 (IEEE/IEC/ANSI C63.19-2011)
DASY Configuration:

- Area Scan setting - Find Secondary Maximum Within:2.0dB and with a peak SAR value greater than 0.5 W/Kg
- Probe: EX3DV4 - SN3977;ConvF(9.78, 9.78, 9.78); Calibrated: 2014/2/17;
- Sensor-Surface: 2mm (Mechanical Surface Detection)
- Electronics: DAE4 Sn779;Calibrated: 2014/2/25
- Phantom: ELI v5.0;Type: QDOVA002AA;Serial: TP:1133
- Measurement SW: DASY52, Version 52.8 (7);SEMCAD X Version 14.6.10 (7164)

Flat/Area Scan (71x111x1):
Interpolated grid: dx=1.500 mm, dy=1.500 mm
Maximum value of SAR (interpolated) = 0.956 W/kg

Flat/Zoom Scan (5x5x7)/Cube 0:
Measurement grid: dx=8mm, dy=8mm, dz=5mm
Reference Value = 27.353 V/m; Power Drift = -0.03 dB
Peak SAR (extrapolated) = 1.09 W/kg
SAR(1 g) = 0.752 W/kg; SAR(10 g) = 0.515 W/kg
Maximum value of SAR (measured) = 0.944 W/kg

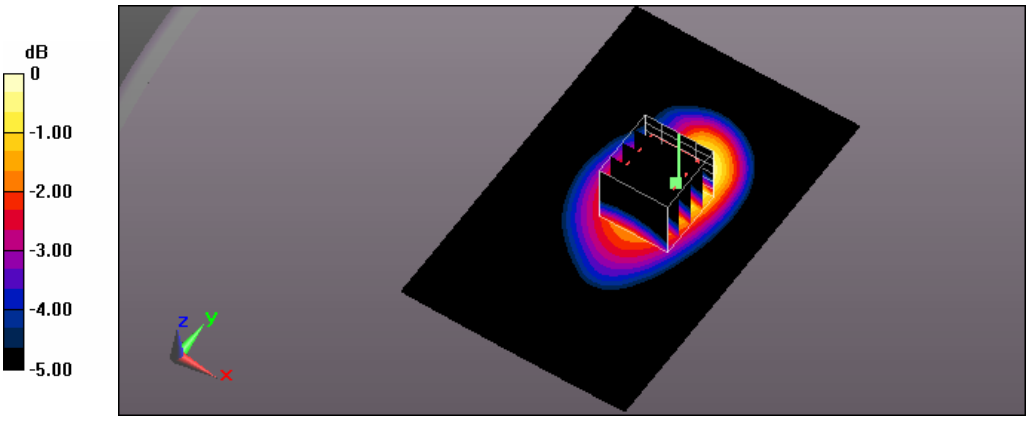

0 dB = 0.944 W/kg = -0.25 dBW/kg

Test Laboratory: A Test Lab Techno Corp.
Date: 2014/11/16Time: PM 05:44:32
137_Flat_LTE Band17 BW 10M CH23790_QPSK with 25 RB Size 0 RB Offset side 2 surface to phantom 10mm
DUT: AC785S-500;Type: WWAN Mobile Hotspot Portable Device;Serial: 014197000002053
Communication System: UID 0, Generic LTE (0);Frequency: 710 MHz;Duty Cycle: 1:1
Medium parameters used: f = 710 MHz; σ = 0.947 S/m; ε_r = 53.998; ρ = 1000 kg/m^3
Phantom section: Flat Section
Measurement Standard: DASY5 (IEEE/IEC/ANSI C63.19-2011)
DASY Configuration:

- Area Scan setting - Find Secondary Maximum Within:2.0dB and with a peak SAR value greater than 0.5 W/Kg
- Probe: EX3DV4 - SN3977;ConvF(9.78, 9.78, 9.78); Calibrated: 2014/2/17;
- Sensor-Surface: 2mm (Mechanical Surface Detection)
- Electronics: DAE4 Sn779;Calibrated: 2014/2/25
- Phantom: ELI v5.0;Type: QDOVA002AA;Serial: TP:1133
- Measurement SW: DASY52, Version 52.8 (7);SEMCAD X Version 14.6.10 (7164)

Flat/Area Scan (71x111x1):
Interpolated grid: dx=1.500 mm, dy=1.500 mm
Maximum value of SAR (interpolated) = 0.758 W/kg

Flat/Zoom Scan (5x5x7)/Cube 0:
Measurement grid: dx=8mm, dy=8mm, dz=5mm
Reference Value = 25.064 V/m; Power Drift = 0.01 dB
Peak SAR (extrapolated) = 0.871 W/kg
SAR(1 g) = 0.622 W/kg; SAR(10 g) = 0.436 W/kg
Maximum value of SAR (measured) = 0.757 W/kg

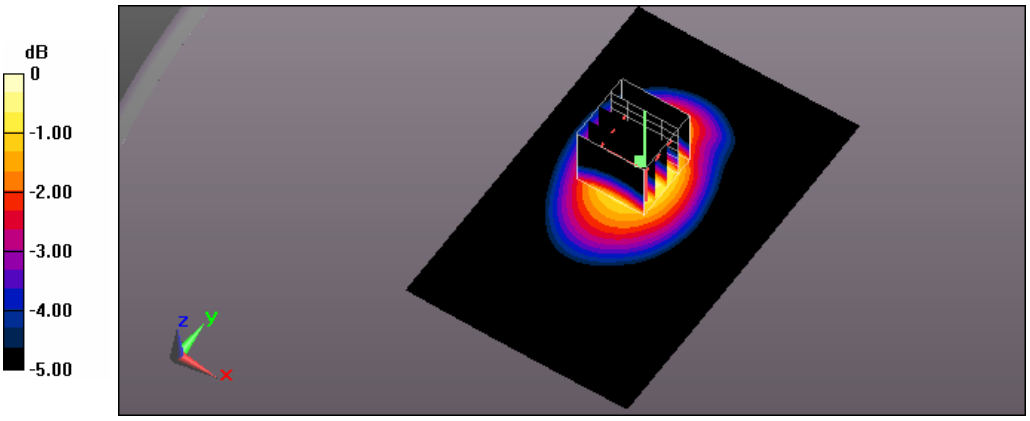

0 dB = 0.757 W/kg = -1.21 dBW/kg

Test Laboratory: A Test Lab Techno Corp.
Date: 2014/11/17Time: PM 04:04:35
138_Flat_LTE Band17 BW 10M CH23790_QPSK with 25 RB Size 0 RB Offset side 3 surface to phantom 10mm
DUT: AC785S-500;Type: WWAN Mobile Hotspot Portable Device;Serial: 014197000002053
Communication System: UID 0, Generic LTE (0);Frequency: 710 MHz;Duty Cycle: 1:1
Medium parameters used: f = 710 MHz; σ = 0.947 S/m; ε_r = 53.998; ρ = 1000 kg/m^3
Phantom section: Flat Section
Measurement Standard: DASY5 (IEEE/IEC/ANSI C63.19-2011)
DASY Configuration:

- Area Scan setting - Find Secondary Maximum Within:2.0dB and with a peak SAR value greater than 0.5 W/Kg
- Probe: EX3DV4 - SN3977;ConvF(9.78, 9.78, 9.78); Calibrated: 2014/2/17;
- Sensor-Surface: 2mm (Mechanical Surface Detection)
- Electronics: DAE4 Sn779;Calibrated: 2014/2/25
- Phantom: ELI v5.0;Type: QDOVA002AA;Serial: TP:1133
- Measurement SW: DASY52, Version 52.8 (7);SEMCAD X Version 14.6.10 (7164)

Flat/Area Scan (61x111x1):
Interpolated grid: dx=1.500 mm, dy=1.500 mm
Maximum value of SAR (interpolated) = 0.302 W/kg

Flat/Zoom Scan (5x5x7)/Cube 0:
Measurement grid: dx=8mm, dy=8mm, dz=5mm
Reference Value = 17.651 V/m; Power Drift = -0.07 dB
Peak SAR (extrapolated) = 0.343 W/kg
SAR(1 g) = 0.247 W/kg; SAR(10 g) = 0.173 W/kg
Maximum value of SAR (measured) = 0.301 W/kg

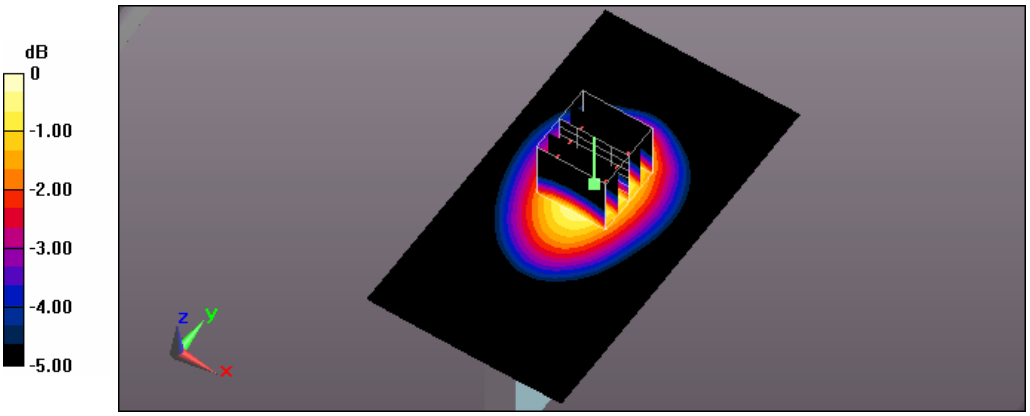

0 dB = 0.301 W/kg = -5.21 dBW/kg

Test Laboratory: A Test Lab Techno Corp.
Date: 2014/11/17Time: PM 05:55:56
139_Flat_LTE Band17 BW 10M CH23790_QPSK with 25 RB Size 0 RB Offset side 4 surface to phantom 10mm
DUT: AC785S-500;Type: WWAN Mobile Hotspot Portable Device;Serial: 014197000002053
Communication System: UID 0, Generic LTE (0);Frequency: 710 MHz;Duty Cycle: 1:1
Medium parameters used: f = 710 MHz; σ = 0.947 S/m; ε_r = 53.998; ρ = 1000 kg/m^3
Phantom section: Flat Section
Measurement Standard: DASY5 (IEEE/IEC/ANSI C63.19-2011)
DASY Configuration:

- Area Scan setting - Find Secondary Maximum Within:2.0dB and with a peak SAR value greater than 0.5 W/Kg
- Probe: EX3DV4 - SN3977;ConvF(9.78, 9.78, 9.78); Calibrated: 2014/2/17;
- Sensor-Surface: 2mm (Mechanical Surface Detection)
- Electronics: DAE4 Sn779;Calibrated: 2014/2/25
- Phantom: ELI v5.0;Type: QDOVA002AA;Serial: TP:1133
- Measurement SW: DASY52, Version 52.8 (7);SEMCAD X Version 14.6.10 (7164)

Flat/Area Scan (61x111x1):
Interpolated grid: dx=1.500 mm, dy=1.500 mm
Maximum value of SAR (interpolated) = 0.347 W/kg

Flat/Zoom Scan (5x5x7)/Cube 0:
Measurement grid: dx=8mm, dy=8mm, dz=5mm
Reference Value = 19.173 V/m; Power Drift = -0.02 dB
Peak SAR (extrapolated) = 0.402 W/kg
SAR(1 g) = 0.280 W/kg; SAR(10 g) = 0.190 W/kg
Maximum value of SAR (measured) = 0.346 W/kg

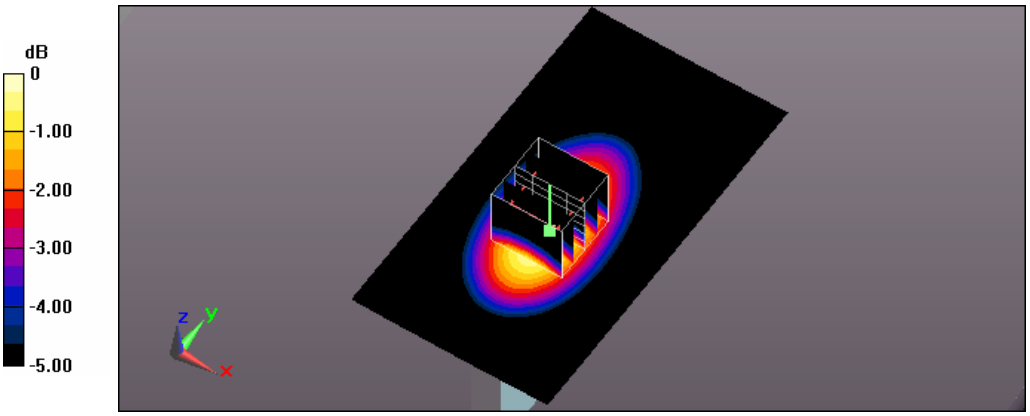

0 dB = 0.346 W/kg = -4.61 dBW/kg

Test Laboratory: A Test Lab Techno Corp.
Date: 2014/11/17Time: PM 08:59:46
140_Flat_LTE Band17 BW 10M CH23790_QPSK with 25 RB Size 0 RB Offset side 6 surface to phantom 10mm
DUT: AC785S-500;Type: WWAN Mobile Hotspot Portable Device;Serial: 014197000002053
Communication System: UID 0, Generic LTE (0);Frequency: 710 MHz;Duty Cycle: 1:1
Medium parameters used: f = 710 MHz; σ = 0.947 S/m; ε_r = 53.998; ρ = 1000 kg/m^3
Phantom section: Flat Section
Measurement Standard: DASY5 (IEEE/IEC/ANSI C63.19-2011)
DASY Configuration:

- Area Scan setting - Find Secondary Maximum Within:2.0dB and with a peak SAR value greater than 0.5 W/Kg
- Probe: EX3DV4 - SN3977;ConvF(9.78, 9.78, 9.78); Calibrated: 2014/2/17;
- Sensor-Surface: 2mm (Mechanical Surface Detection)
- Electronics: DAE4 Sn779;Calibrated: 2014/2/25
- Phantom: ELI v5.0;Type: QDOVA002AA;Serial: TP:1133
- Measurement SW: DASY52, Version 52.8 (7);SEMCAD X Version 14.6.10 (7164)

Flat/Area Scan (61x111x1):
Interpolated grid: dx=1.500 mm, dy=1.500 mm
Maximum value of SAR (interpolated) = 0.0980 W/kg

Flat/Zoom Scan (5x5x7)/Cube 0:
Measurement grid: dx=8mm, dy=8mm, dz=5mm
Reference Value = 10.350 V/m; Power Drift = -0.01 dB
Peak SAR (extrapolated) = 0.127 W/kg
SAR(1 g) = 0.069 W/kg; SAR(10 g) = 0.040 W/kg
Maximum value of SAR (measured) = 0.0987 W/kg

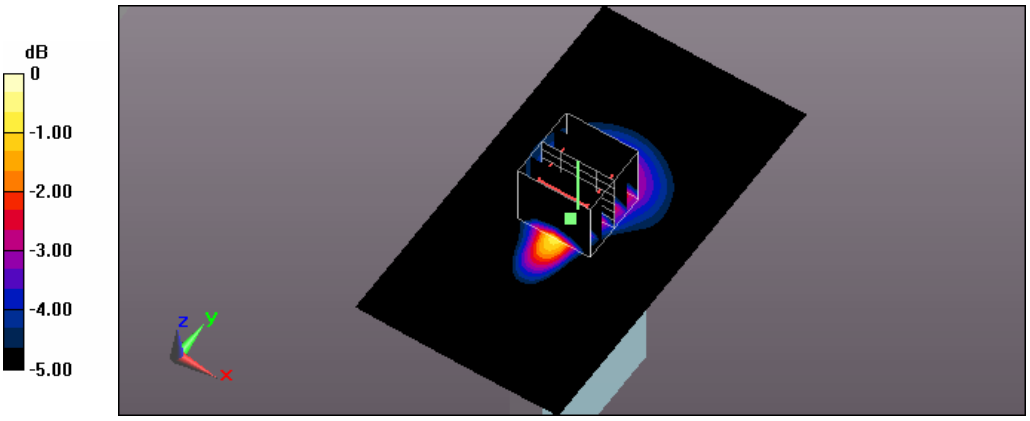

0 dB = 0.0987 W/kg = -10.06 dBW/kg

Test Laboratory: A Test Lab Techno Corp.
Date: 2014/11/17Time: PM 01:32:18
189_Flat_LTE Band17 BW 10M CH23780_QPSK with 50 RB Size 0 RB Offset side 1 surface to phantom 10mm
DUT: AC785S-500;Type: WWAN Mobile Hotspot Portable Device;Serial: 014197000002053
Communication System: UID 0, Generic LTE (0);Frequency: 709 MHz;Duty Cycle: 1:1
Medium parameters used: f = 709 MHz; σ = 0.946 S/m; ε_r = 54.006; ρ = 1000 kg/m^3
Phantom section: Flat Section
Measurement Standard: DASY5 (IEEE/IEC/ANSI C63.19-2011)
DASY Configuration:

- Area Scan setting - Find Secondary Maximum Within:2.0dB and with a peak SAR value greater than 0.5 W/Kg
- Probe: EX3DV4 - SN3977;ConvF(9.78, 9.78, 9.78); Calibrated: 2014/2/17;
- Sensor-Surface: 2mm (Mechanical Surface Detection)
- Electronics: DAE4 Sn779;Calibrated: 2014/2/25
- Phantom: ELI v5.0;Type: QDOVA002AA;Serial: TP:1133
- Measurement SW: DASY52, Version 52.8 (7);SEMCAD X Version 14.6.10 (7164)

Flat/Area Scan (71x111x1):
Interpolated grid: dx=1.500 mm, dy=1.500 mm
Maximum value of SAR (interpolated) = 0.945 W/kg

Flat/Zoom Scan (5x5x7)/Cube 0:
Measurement grid: dx=8mm, dy=8mm, dz=5mm
Reference Value = 27.451 V/m; Power Drift = -0.02 dB
Peak SAR (extrapolated) = 1.11 W/kg
SAR(1 g) = 0.762 W/kg; SAR(10 g) = 0.522 W/kg
Maximum value of SAR (measured) = 0.933 W/kg

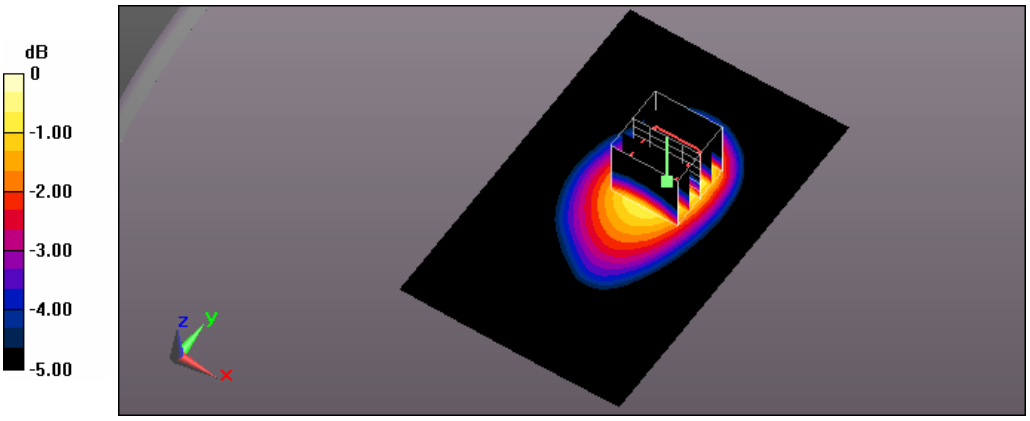

0 dB = 0.933 W/kg = -0.30 dBW/kg

Test Laboratory: A Test Lab Techno Corp.
Date: 2014/11/17Time: PM 02:34:48
191_Flat_LTE Band17 BW 10M CH23780_QPSK with 50 RB Size 0 RB Offset side 2 surface to phantom 10mm
DUT: AC785S-500;Type: WWAN Mobile Hotspot Portable Device;Serial: 014197000002053
Communication System: UID 0, Generic LTE (0);Frequency: 709 MHz;Duty Cycle: 1:1
Medium parameters used: f = 709 MHz; σ = 0.946 S/m; ε_r = 54.006; ρ = 1000 kg/m^3
Phantom section: Flat Section
Measurement Standard: DASY5 (IEEE/IEC/ANSI C63.19-2011)
DASY Configuration:

- Area Scan setting - Find Secondary Maximum Within:2.0dB and with a peak SAR value greater than 0.5 W/Kg
- Probe: EX3DV4 - SN3977;ConvF(9.78, 9.78, 9.78); Calibrated: 2014/2/17;
- Sensor-Surface: 2mm (Mechanical Surface Detection)
- Electronics: DAE4 Sn779;Calibrated: 2014/2/25
- Phantom: ELI v5.0;Type: QDOVA002AA;Serial: TP:1133
- Measurement SW: DASY52, Version 52.8 (7);SEMCAD X Version 14.6.10 (7164)

Flat/Area Scan (71x111x1):
Interpolated grid: dx=1.500 mm, dy=1.500 mm
Maximum value of SAR (interpolated) = 0.748 W/kg

Flat/Zoom Scan (5x5x7)/Cube 0:
Measurement grid: dx=8mm, dy=8mm, dz=5mm
Reference Value = 25.081 V/m; Power Drift = -0.00 dB
Peak SAR (extrapolated) = 0.868 W/kg
SAR(1 g) = 0.623 W/kg; SAR(10 g) = 0.437 W/kg
Maximum value of SAR (measured) = 0.754 W/kg

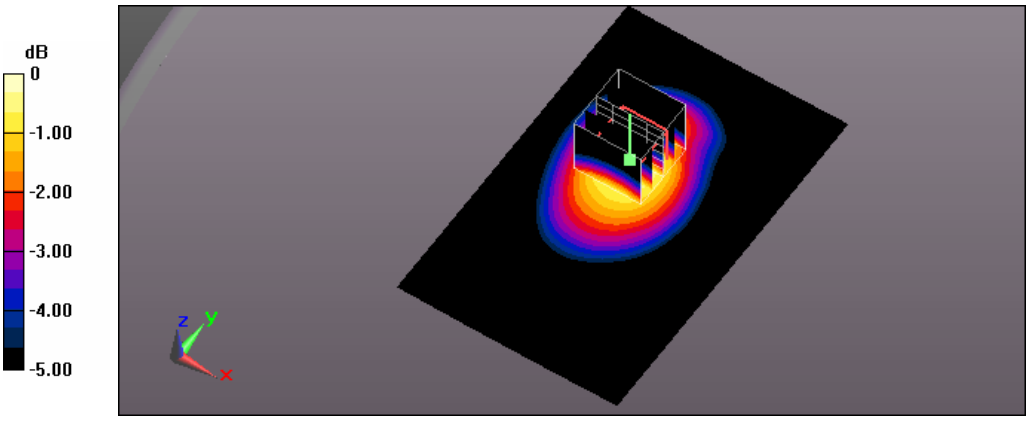

0 dB = 0.754 W/kg = -1.23 dBW/kg

Test Laboratory: A Test Lab Techno Corp.
Date: 2014/9/27Time: AM 11:33:32
141_Flat_LTE Band2 BW 20M CH19100_QPSK with 1 RB Size 0 RB Offset__original 32_side 1 surface to phantom 10mm_measurement onece
DUT: AC785S-500;Type: WWAN Mobile Hotspot Portable Device;Serial: 014197000002053
Communication System: UID 0, Generic LTE (0);Frequency: 1900 MHz;Duty Cycle: 1:1
Medium parameters used: f = 1900 MHz; σ = 1.475 S/m; ε_r = 52.463; ρ = 1000 kg/m^3
Phantom section: Flat Section
Measurement Standard: DASY5 (IEEE/IEC/ANSI C63.19-2011)
DASY Configuration:

- Area Scan setting - Find Secondary Maximum Within:2.0dB and with a peak SAR value greater than 0.5 W/Kg
- Probe: EX3DV4 - SN3977;ConvF(7.37, 7.37, 7.37); Calibrated: 2014/2/17;
- Sensor-Surface: 2mm (Mechanical Surface Detection)
- Electronics: DAE4 Sn779;Calibrated: 2014/2/25
- Phantom: ELI v5.0;Type: QDOVA002AA;Serial: TP:1133
- Measurement SW: DASY52, Version 52.8 (7);SEMCAD X Version 14.6.10 (7164)

Flat/Area Scan (71x111x1):
Interpolated grid: dx=1.500 mm, dy=1.500 mm
Maximum value of SAR (interpolated) = 1.60 W/kg

Flat/Zoom Scan (5x5x7)/Cube 0:
Measurement grid: dx=8mm, dy=8mm, dz=5mm
Reference Value = 16.549 V/m; Power Drift = 0.12 dB
Peak SAR (extrapolated) = 1.80 W/kg
SAR(1 g) = 1.04 W/kg; SAR(10 g) = 0.564 W/kg
Maximum value of SAR (measured) = 1.43 W/kg

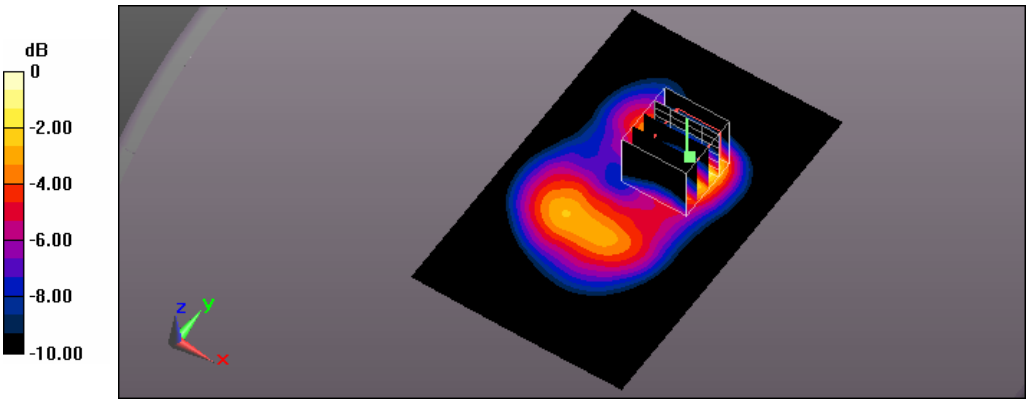

0 dB = 1.43 W/kg = 1.55 dBW/kg

Test Laboratory: A Test Lab Techno Corp.
Date: 2014/9/28Time: AM 02:13:32
208_Flat_LTE Band2 BW 20M CH19100_QPSK with 1 RB Size 0 RB Offset__original 32_side 1 surface to phantom 10mm_measurement second
DUT: AC785S-500;Type: WWAN Mobile Hotspot Portable Device;Serial: 014197000002053
Communication System: UID 0, Generic LTE (0);Frequency: 1900 MHz;Duty Cycle: 1:1
Medium parameters used: f = 1900 MHz; σ = 1.475 S/m; ε_r = 52.463; ρ = 1000 kg/m^3
Phantom section: Flat Section
Measurement Standard: DASY5 (IEEE/IEC/ANSI C63.19-2011)
DASY Configuration:

- Area Scan setting - Find Secondary Maximum Within:2.0dB and with a peak SAR value greater than 0.5 W/Kg
- Probe: EX3DV4 - SN3977;ConvF(7.37, 7.37, 7.37); Calibrated: 2014/2/17;
- Sensor-Surface: 2mm (Mechanical Surface Detection)
- Electronics: DAE4 Sn779;Calibrated: 2014/2/25
- Phantom: ELI v5.0;Type: QDOVA002AA;Serial: TP:1133
- Measurement SW: DASY52, Version 52.8 (7);SEMCAD X Version 14.6.10 (7164)

Flat/Area Scan (71x111x1):
Interpolated grid: dx=1.500 mm, dy=1.500 mm
Maximum value of SAR (interpolated) = 1.58 W/kg

Flat/Zoom Scan (5x5x7)/Cube 0:
Measurement grid: dx=8mm, dy=8mm, dz=5mm
Reference Value = 16.475 V/m; Power Drift = 0.12 dB
Peak SAR (extrapolated) = 1.78 W/kg
SAR(1 g) = 1.03 W/kg; SAR(10 g) = 0.560 W/kg
Maximum value of SAR (measured) = 1.42 W/kg

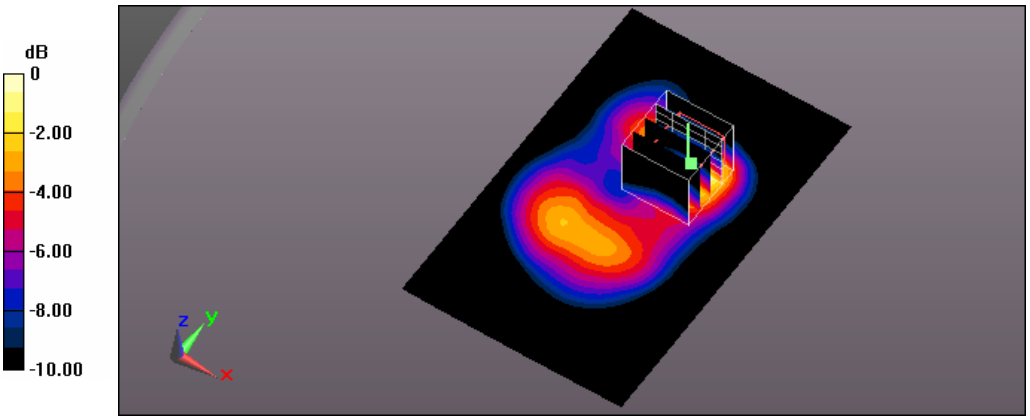

0 dB = 1.42 W/kg = 1.52 dBW/kg

Test Laboratory: A Test Lab Techno Corp.
Date: 2014/9/29Time: PM 11:42:04
142_Flat_LTE Band4 BW 20M CH20050_QPSK with 1 RB Size 0 RB Offset original 50_side 6 surface to phantom 10mm_measurement onece
DUT: AC785S-500;Type: WWAN Mobile Hotspot Portable Device;Serial: 014197000002053
Communication System: UID 0, Generic LTE (0);Frequency: 1720 MHz;Duty Cycle: 1:1
Medium parameters used: f = 1720 MHz; σ = 1.494 S/m; ε_r = 54.545; ρ = 1000 kg/m^3
Phantom section: Flat Section
Measurement Standard: DASY5 (IEEE/IEC/ANSI C63.19-2011)
DASY Configuration:

- Area Scan setting - Find Secondary Maximum Within:2.0dB and with a peak SAR value greater than 0.5 W/Kg
- Probe: EX3DV4 - SN3977;ConvF(7.69, 7.69, 7.69); Calibrated: 2014/2/17;
- Sensor-Surface: 2mm (Mechanical Surface Detection)
- Electronics: DAE4 Sn779;Calibrated: 2014/2/25
- Phantom: ELI v5.0;Type: QDOVA002AA;Serial: TP:1133
- Measurement SW: DASY52, Version 52.8 (7);SEMCAD X Version 14.6.10 (7164)

Flat/Area Scan (61x111x1):
Interpolated grid: dx=1.500 mm, dy=1.500 mm
Maximum value of SAR (interpolated) = 1.91 W/kg

Flat/Zoom Scan (5x5x7)/Cube 0:
Measurement grid: dx=8mm, dy=8mm, dz=5mm
Reference Value = 33.738 V/m; Power Drift = 0.06 dB
Peak SAR (extrapolated) = 2.33 W/kg
SAR(1 g) = 1.34 W/kg; SAR(10 g) = 0.716 W/kg
Maximum value of SAR (measured) = 1.83 W/kg

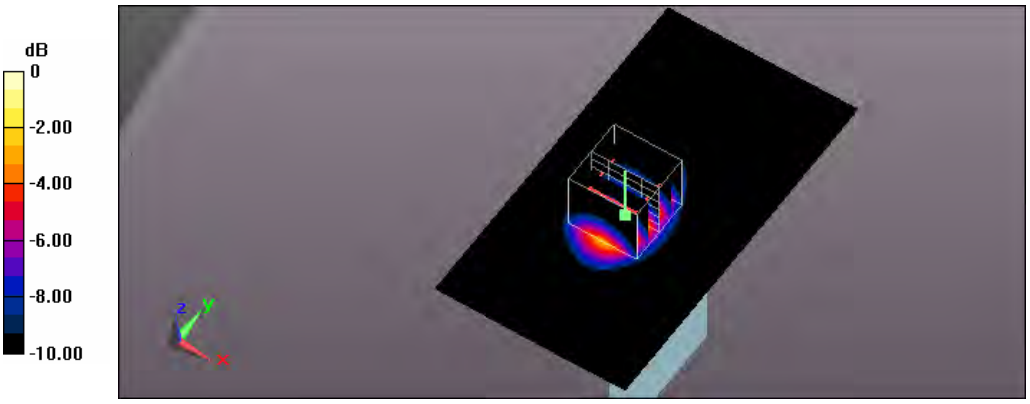

0 dB = 1.83 W/kg = 2.62 dBW/kg

Test Laboratory: A Test Lab Techno Corp.
Date: 2014/9/29Time: PM 11:24:06
143_Flat_LTE Band4 BW 20M CH20050_QPSK with 1 RB Size 0 RB Offset original 50_side 6 surface to phantom 10mm_measurement second
DUT: AC785S-500;Type: WWAN Mobile Hotspot Portable Device;Serial: 014197000002053
Communication System: UID 0, Generic LTE (0);Frequency: 1720 MHz;Duty Cycle: 1:1
Medium parameters used: f = 1720 MHz; σ = 1.494 S/m; ε_r = 54.545; ρ = 1000 kg/m^3
Phantom section: Flat Section
Measurement Standard: DASY5 (IEEE/IEC/ANSI C63.19-2011)
DASY Configuration:

- Area Scan setting - Find Secondary Maximum Within:2.0dB and with a peak SAR value greater than 0.5 W/Kg
- Probe: EX3DV4 - SN3977;ConvF(7.69, 7.69, 7.69); Calibrated: 2014/2/17;
- Sensor-Surface: 2mm (Mechanical Surface Detection)
- Electronics: DAE4 Sn779;Calibrated: 2014/2/25
- Phantom: ELI v5.0;Type: QDOVA002AA;Serial: TP:1133
- Measurement SW: DASY52, Version 52.8 (7);SEMCAD X Version 14.6.10 (7164)

Flat/Area Scan (61x111x1):
Interpolated grid: dx=1.500 mm, dy=1.500 mm
Maximum value of SAR (interpolated) = 1.58 W/kg

Flat/Zoom Scan (5x5x7)/Cube 0:
Measurement grid: dx=8mm, dy=8mm, dz=5mm
Reference Value = 28.045 V/m; Power Drift = 0.15 dB
Peak SAR (extrapolated) = 2.34 W/kg
SAR(1 g) = 1.37 W/kg; SAR(10 g) = 0.727 W/kg
Maximum value of SAR (measured) = 1.86 W/kg

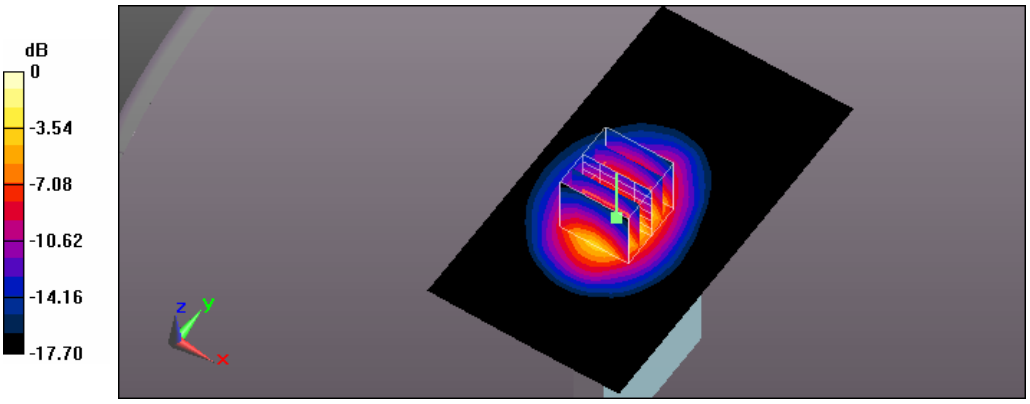

0 dB = 1.86 W/kg = 2.70 dBW/kg

Test Laboratory: A Test Lab Techno Corp.
Date: 2014/9/29Time: PM 11:01:36
144_Flat_LTE Band4 BW 20M CH20050_QPSK with 1 RB Size 0 RB Offset original 50_side 6 surface to phantom 10mm_measurement tired
DUT: AC785S-500;Type: WWAN Mobile Hotspot Portable Device;Serial: 014197000002053
Communication System: UID 0, Generic LTE (0);Frequency: 1720 MHz;Duty Cycle: 1:1
Medium parameters used: f = 1720 MHz; σ = 1.494 S/m; ε_r = 54.545; ρ = 1000 kg/m^3
Phantom section: Flat Section
Measurement Standard: DASY5 (IEEE/IEC/ANSI C63.19-2011)
DASY Configuration:

- Area Scan setting - Find Secondary Maximum Within:2.0dB and with a peak SAR value greater than 0.5 W/Kg
- Probe: EX3DV4 - SN3977;ConvF(7.69, 7.69, 7.69); Calibrated: 2014/2/17;
- Sensor-Surface: 2mm (Mechanical Surface Detection)
- Electronics: DAE4 Sn779;Calibrated: 2014/2/25
- Phantom: ELI v5.0;Type: QDOVA002AA;Serial: TP:1133
- Measurement SW: DASY52, Version 52.8 (7);SEMCAD X Version 14.6.10 (7164)

Flat/Area Scan (61x111x1):
Interpolated grid: dx=1.500 mm, dy=1.500 mm
Maximum value of SAR (interpolated) = 1.34 W/kg

Flat/Zoom Scan (5x5x7)/Cube 0:
Measurement grid: dx=8mm, dy=8mm, dz=5mm
Reference Value = 28.144 V/m; Power Drift = 0.16 dB
Peak SAR (extrapolated) = 2.33 W/kg
SAR(1 g) = 1.35 W/kg; SAR(10 g) = 0.723 W/kg
Maximum value of SAR (measured) = 1.87 W/kg

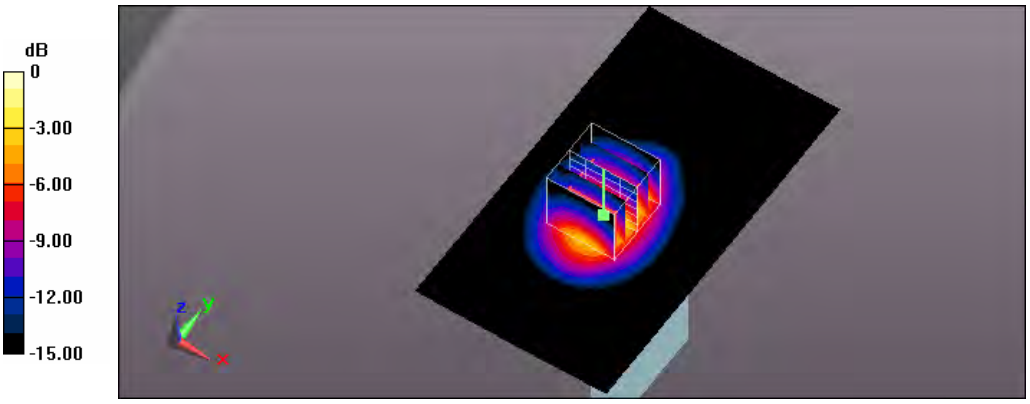

0 dB = 1.87 W/kg = 2.72 dBW/kg

Test Laboratory: A Test Lab Techno Corp.
Date: 2014/9/26Time: AM 11:48:53
145_Flat_LTE Band5 BW 10M CH20450_QPSK with 1 RB Size 0 RB Offset_original 60_side 1 surface to phantom 10mm_measurement once
DUT: AC785S-500;Type: WWAN Mobile Hotspot Portable Device;Serial: 014197000002053
Communication System: UID 0, Generic LTE (0);Frequency: 829 MHz;Duty Cycle: 1:1
Medium parameters used: f = 829 MHz; σ = 0.982 S/m; ε_r = 55.325; ρ = 1000 kg/m^3
Phantom section: Flat Section
Measurement Standard: DASY5 (IEEE/IEC/ANSI C63.19-2011)
DASY Configuration:

- Area Scan setting - Find Secondary Maximum Within:2.0dB and with a peak SAR value greater than 0.5 W/Kg
- Probe: EX3DV4 - SN3977;ConvF(9.74, 9.74, 9.74); Calibrated: 2014/2/17;
- Sensor-Surface: 2mm (Mechanical Surface Detection)
- Electronics: DAE4 Sn779;Calibrated: 2014/2/25
- Phantom: ELI v5.0;Type: QDOVA002AA;Serial: TP:1133
- Measurement SW: DASY52, Version 52.8 (7);SEMCAD X Version 14.6.10 (7164)

Flat/Area Scan (71x111x1):
Interpolated grid: dx=1.500 mm, dy=1.500 mm
Maximum value of SAR (interpolated) = 1.18 W/kg

Flat/Zoom Scan (5x5x7)/Cube 0:
Measurement grid: dx=8mm, dy=8mm, dz=5mm
Reference Value = 26.880 V/m; Power Drift = -0.03 dB
Peak SAR (extrapolated) = 1.39 W/kg
SAR(1 g) = 0.950 W/kg; SAR(10 g) = 0.652 W/kg
Maximum value of SAR (measured) = 1.17 W/kg

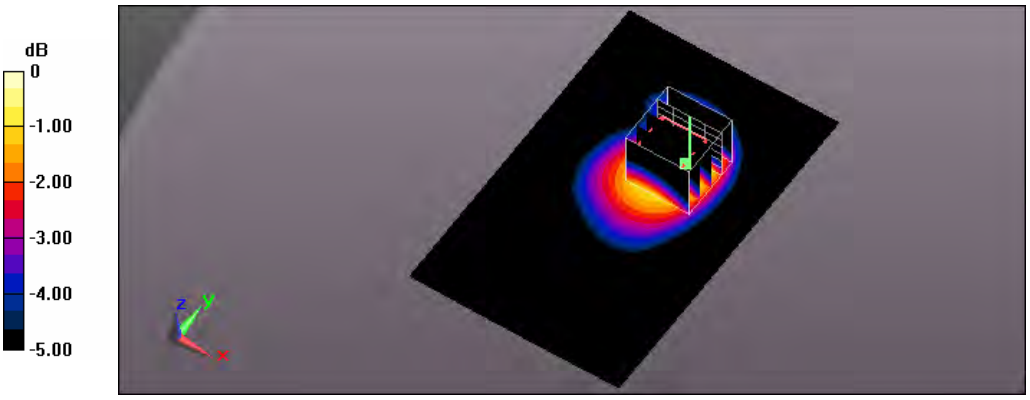

0 dB = 1.17 W/kg = 0.68 dBW/kg

Test Laboratory: A Test Lab Techno Corp.
Date: 2014/9/26Time: PM 12:15:13
209_Flat_LTE Band5 BW 10M CH20450_QPSK with 1 RB Size 0 RB Offset_original 60_side 1 surface to phantom 10mm_measurement second
DUT: AC785S-500;Type: WWAN Mobile Hotspot Portable Device;Serial: 014197000002053
Communication System: UID 0, Generic LTE (0);Frequency: 829 MHz;Duty Cycle: 1:1
Medium parameters used: f = 829 MHz; σ = 0.982 S/m; ε_r = 55.325; ρ = 1000 kg/m^3
Phantom section: Flat Section
Measurement Standard: DASY5 (IEEE/IEC/ANSI C63.19-2011)
DASY Configuration:

- Area Scan setting - Find Secondary Maximum Within:2.0dB and with a peak SAR value greater than 0.5 W/Kg
- Probe: EX3DV4 - SN3977;ConvF(9.74, 9.74, 9.74); Calibrated: 2014/2/17;
- Sensor-Surface: 2mm (Mechanical Surface Detection)
- Electronics: DAE4 Sn779;Calibrated: 2014/2/25
- Phantom: ELI v5.0;Type: QDOVA002AA;Serial: TP:1133
- Measurement SW: DASY52, Version 52.8 (7);SEMCAD X Version 14.6.10 (7164)

Flat/Area Scan (71x111x1):
Interpolated grid: dx=1.500 mm, dy=1.500 mm
Maximum value of SAR (interpolated) = 1.18 W/kg

Flat/Zoom Scan (5x5x7)/Cube 0:
Measurement grid: dx=8mm, dy=8mm, dz=5mm
Reference Value = 26.763 V/m; Power Drift = -0.03 dB
Peak SAR (extrapolated) = 1.40 W/kg
SAR(1 g) = 0.947 W/kg; SAR(10 g) = 0.649 W/kg
Maximum value of SAR (measured) = 1.18 W/kg

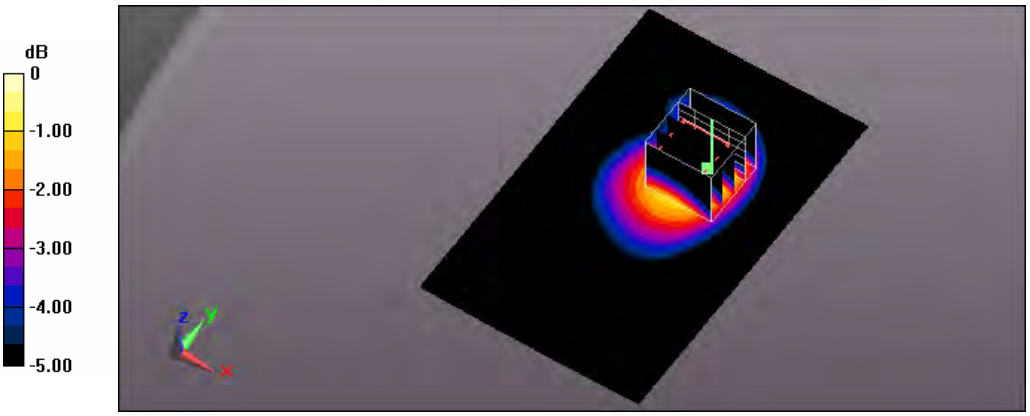

0 dB = 1.18 W/kg = 0.72 dBW/kg

Test Laboratory: A Test Lab Techno Corp.
Date: 2014/11/14Time: PM 09:27:48
146_Flat_LTE Band7 BW 20M CH20850_QPSK with 1 RB Size 0 RB Offset_original 100_side 6 surface to phantom 10mm_measurement onece
DUT: AC785S-500;Type: WWAN Mobile Hotspot Portable Device;Serial: 014197000002053
Communication System: UID 0, Generic LTE (0);Frequency: 2510 MHz;Duty Cycle: 1:1
Medium parameters used: f = 2510 MHz; σ = 2.117 S/m; ε_r = 51.579; ρ = 1000 kg/m^3
Phantom section: Flat Section
Measurement Standard: DASY5 (IEEE/IEC/ANSI C63.19-2011)
DASY Configuration:

- Area Scan setting - Find Secondary Maximum Within:2.0dB and with a peak SAR value greater than 0.5 W/Kg
- Probe: EX3DV4 - SN3977;ConvF(6.68, 6.68, 6.68); Calibrated: 2014/2/17;
- Sensor-Surface: 2mm (Mechanical Surface Detection)
- Electronics: DAE4 Sn779;Calibrated: 2014/2/25
- Phantom: ELI v5.0;Type: QDOVA002AA;Serial: TP:1133
- Measurement SW: DASY52, Version 52.8 (7);SEMCAD X Version 14.6.10 (7164)

Flat/Area Scan (91x161x1):
Interpolated grid: dx=1.000 mm, dy=1.000 mm
Maximum value of SAR (interpolated) = 1.91 W/kg

Flat/Zoom Scan (7x7x7)/Cube 0:
Measurement grid: dx=5mm, dy=5mm, dz=5mm
Reference Value = 22.645 V/m; Power Drift = -0.01 dB
Peak SAR (extrapolated) = 2.60 W/kg
SAR(1 g) = 1.23 W/kg; SAR(10 g) = 0.571 W/kg
Maximum value of SAR (measured) = 1.88 W/kg

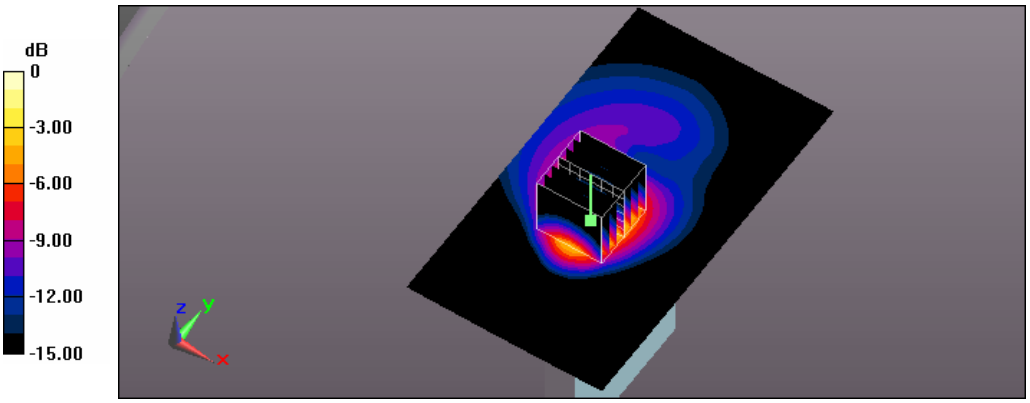

0 dB = 1.88 W/kg = 2.74 dBW/kg

Test Laboratory: A Test Lab Techno Corp.
Date: 2014/11/14Time: PM 10:01:05
147_Flat_LTE Band7 BW 20M CH20850_QPSK with 1 RB Size 0 RB Offset_original 100_side 6 surface to phantom 10mm_measurement second
DUT: AC785S-500;Type: WWAN Mobile Hotspot Portable Device;Serial: 014197000002053
Communication System: UID 0, Generic LTE (0);Frequency: 2510 MHz;Duty Cycle: 1:1
Medium parameters used: f = 2510 MHz; σ = 2.117 S/m; ε_r = 51.579; ρ = 1000 kg/m^3
Phantom section: Flat Section
Measurement Standard: DASY5 (IEEE/IEC/ANSI C63.19-2011)
DASY Configuration:

- Area Scan setting - Find Secondary Maximum Within:2.0dB and with a peak SAR value greater than 0.5 W/Kg
- Probe: EX3DV4 - SN3977;ConvF(6.68, 6.68, 6.68); Calibrated: 2014/2/17;
- Sensor-Surface: 2mm (Mechanical Surface Detection)
- Electronics: DAE4 Sn779;Calibrated: 2014/2/25
- Phantom: ELI v5.0;Type: QDOVA002AA;Serial: TP:1133
- Measurement SW: DASY52, Version 52.8 (7);SEMCAD X Version 14.6.10 (7164)

Flat/Area Scan (91x161x1):
Interpolated grid: dx=1.000 mm, dy=1.000 mm
Maximum value of SAR (interpolated) = 1.92 W/kg

Flat/Zoom Scan (7x7x7)/Cube 0:
Measurement grid: dx=5mm, dy=5mm, dz=5mm
Reference Value = 22.761 V/m; Power Drift = -0.03 dB
Peak SAR (extrapolated) = 2.61 W/kg
SAR(1 g) = 1.24 W/kg; SAR(10 g) = 0.575 W/kg
Maximum value of SAR (measured) = 1.89 W/kg

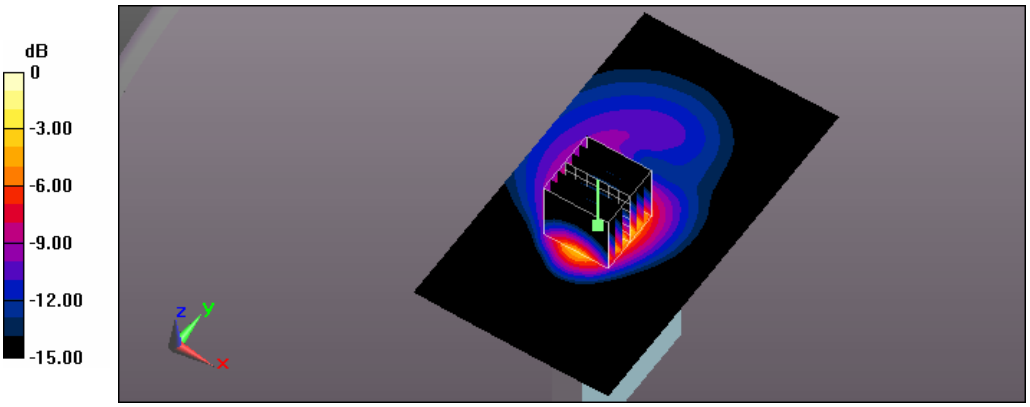

0 dB = 1.89 W/kg = 2.76 dBW/kg

Test Laboratory: A Test Lab Techno Corp.
Date: 2014/11/17Time: PM 09:29:33
192_Flat_LTE Band12 BW 10M CH23130_QPSK with 1 RB Size 0 RB Offset_original 178_side 1 surface to phantom 10mm_measurement onece
DUT: AC785S-500;Type: WWAN Mobile Hotspot Portable Device;Serial: 014197000002053
Communication System: UID 0, Generic LTE (0);Frequency: 711 MHz;Duty Cycle: 1:1
Medium parameters used: f = 711 MHz; σ = 0.948 S/m; ε_r = 53.992; ρ = 1000 kg/m^3
Phantom section: Flat Section
Measurement Standard: DASY5 (IEEE/IEC/ANSI C63.19-2011)
DASY Configuration:

- Area Scan setting - Find Secondary Maximum Within:2.0dB and with a peak SAR value greater than 0.5 W/Kg
- Probe: EX3DV4 - SN3977;ConvF(9.78, 9.78, 9.78); Calibrated: 2014/2/17;
- Sensor-Surface: 2mm (Mechanical Surface Detection)
- Electronics: DAE4 Sn779;Calibrated: 2014/2/25
- Phantom: ELI v5.0;Type: QDOVA002AA;Serial: TP:1133
- Measurement SW: DASY52, Version 52.8 (7);SEMCAD X Version 14.6.10 (7164)

Flat/Area Scan (71x111x1):
Interpolated grid: dx=1.500 mm, dy=1.500 mm
Maximum value of SAR (interpolated) = 1.22 W/kg

Flat/Zoom Scan (5x5x7)/Cube 0:
Measurement grid: dx=8mm, dy=8mm, dz=5mm
Reference Value = 30.990 V/m; Power Drift = -0.05 dB
Peak SAR (extrapolated) = 1.43 W/kg
SAR(1 g) = 0.982 W/kg; SAR(10 g) = 0.678 W/kg
Maximum value of SAR (measured) = 1.22 W/kg

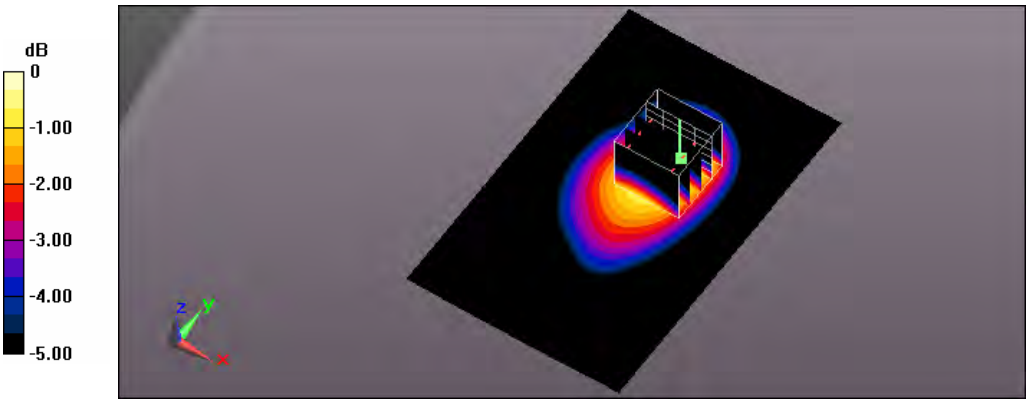

0 dB = 1.22 W/kg = 0.86 dBW/kg

Test Laboratory: A Test Lab Techno Corp.
Date: 2014/11/17Time: PM 10:41:03
210_Flat_LTE Band12 BW 10M CH23130_QPSK with 1 RB Size 0 RB Offset_original 178_side 1 surface to phantom 10mm_measurement second
DUT: AC785S-500;Type: WWAN Mobile Hotspot Portable Device;Serial: 014197000002053
Communication System: UID 0, Generic LTE (0);Frequency: 711 MHz;Duty Cycle: 1:1
Medium parameters used: f = 711 MHz; σ = 0.948 S/m; ε_r = 53.992; ρ = 1000 kg/m^3
Phantom section: Flat Section
Measurement Standard: DASY5 (IEEE/IEC/ANSI C63.19-2011)
DASY Configuration:

- Area Scan setting - Find Secondary Maximum Within:2.0dB and with a peak SAR value greater than 0.5 W/Kg
- Probe: EX3DV4 - SN3977;ConvF(9.78, 9.78, 9.78); Calibrated: 2014/2/17;
- Sensor-Surface: 2mm (Mechanical Surface Detection)
- Electronics: DAE4 Sn779;Calibrated: 2014/2/25
- Phantom: ELI v5.0;Type: QDOVA002AA;Serial: TP:1133
- Measurement SW: DASY52, Version 52.8 (7);SEMCAD X Version 14.6.10 (7164)

Flat/Area Scan (71x111x1):
Interpolated grid: dx=1.500 mm, dy=1.500 mm
Maximum value of SAR (interpolated) = 1.22 W/kg

Flat/Zoom Scan (5x5x7)/Cube 0:
Measurement grid: dx=8mm, dy=8mm, dz=5mm
Reference Value = 30.859 V/m; Power Drift = -0.05 dB
Peak SAR (extrapolated) = 1.44 W/kg
SAR(1 g) = 0.980 W/kg; SAR(10 g) = 0.674 W/kg
Maximum value of SAR (measured) = 1.22 W/kg

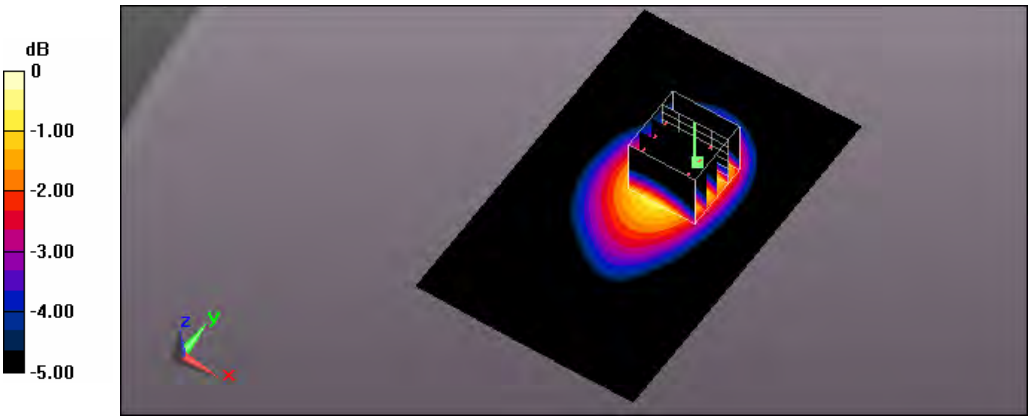

0 dB = 1.22 W/kg = 0.86 dBW/kg

Test Laboratory: A Test Lab Techno Corp.
Date: 2014/10/1Time: PM 08:01:00
159_Flat_LTE Band13 BW 10M CH23230_QPSK with 1 RB Size 0 RB Offset_original 121_ side 1 surface to phantom 10mm_measurement onece
DUT: AC785S-500;Type: WWAN Mobile Hotspot Portable Device;Serial: 014197000002053
Communication System: UID 0, Generic LTE (0);Frequency: 782 MHz;Duty Cycle: 1:1
Medium parameters used: f = 782 MHz; σ = 0.994 S/m; ε_r = 53.415; ρ = 1000 kg/m^3
Phantom section: Flat Section
Measurement Standard: DASY5 (IEEE/IEC/ANSI C63.19-2011)
DASY Configuration:

- Area Scan setting - Find Secondary Maximum Within:2.0dB and with a peak SAR value greater than 0.5 W/Kg
- Probe: EX3DV4 - SN3977;ConvF(9.78, 9.78, 9.78); Calibrated: 2014/2/17;
- Sensor-Surface: 2mm (Mechanical Surface Detection)
- Electronics: DAE4 Sn779;Calibrated: 2014/2/25
- Phantom: ELI v5.0;Type: QDOVA002AA;Serial: TP:1133
- Measurement SW: DASY52, Version 52.8 (7);SEMCAD X Version 14.6.10 (7164)

Flat/Area Scan (71x111x1):
Interpolated grid: dx=1.500 mm, dy=1.500 mm
Maximum value of SAR (interpolated) = 1.28 W/kg

Flat/Zoom Scan (5x5x7)/Cube 0:
Measurement grid: dx=8mm, dy=8mm, dz=5mm
Reference Value = 19.571 V/m; Power Drift = -0.17 dB
Peak SAR (extrapolated) = 1.53 W/kg
SAR(1 g) = 0.950 W/kg; SAR(10 g) = 0.587 W/kg
Maximum value of SAR (measured) = 1.25 W/kg

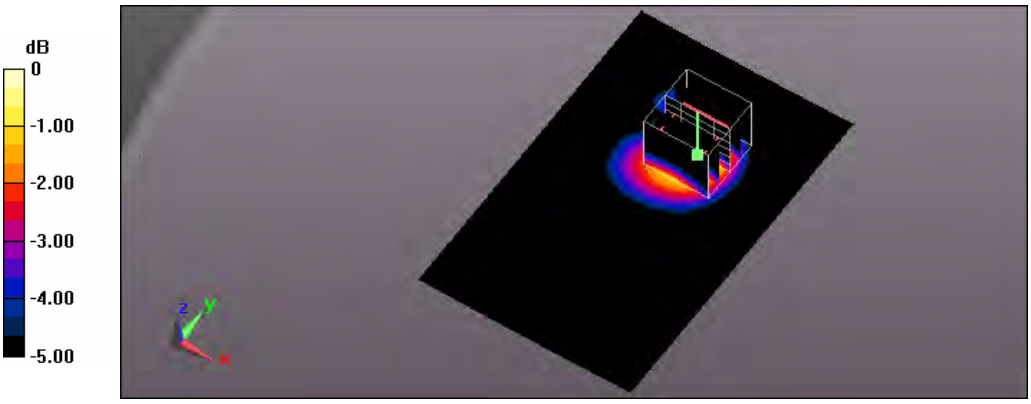

0 dB = 1.25 W/kg = 0.97 dBW/kg

Test Laboratory: A Test Lab Techno Corp.
Date: 2014/11/17Time: PM 10:00:43
193_Flat_LTE Band17 BW 10M CH23780_QPSK with 1 RB Size 0 RB Offset_original 131_side 1 surface to phantom 10mm_measurement onece
DUT: AC785S-500;Type: WWAN Mobile Hotspot Portable Device;Serial: 014197000002053
Communication System: UID 0, Generic LTE (0);Frequency: 709 MHz;Duty Cycle: 1:1
Medium parameters used: f = 709 MHz; σ = 0.946 S/m; ε_r = 54.006; ρ = 1000 kg/m^3
Phantom section: Flat Section
Measurement Standard: DASY5 (IEEE/IEC/ANSI C63.19-2011)
DASY Configuration:

- Area Scan setting - Find Secondary Maximum Within:2.0dB and with a peak SAR value greater than 0.5 W/Kg
- Probe: EX3DV4 - SN3977;ConvF(9.78, 9.78, 9.78); Calibrated: 2014/2/17;
- Sensor-Surface: 2mm (Mechanical Surface Detection)
- Electronics: DAE4 Sn779;Calibrated: 2014/2/25
- Phantom: ELI v5.0;Type: QDOVA002AA;Serial: TP:1133
- Measurement SW: DASY52, Version 52.8 (7);SEMCAD X Version 14.6.10 (7164)

Flat/Area Scan (71x111x1):
Interpolated grid: dx=1.500 mm, dy=1.500 mm
Maximum value of SAR (interpolated) = 1.24 W/kg

Flat/Zoom Scan (5x5x7)/Cube 0:
Measurement grid: dx=8mm, dy=8mm, dz=5mm
Reference Value = 30.942 V/m; Power Drift = -0.03 dB
Peak SAR (extrapolated) = 1.45 W/kg
SAR(1 g) = 0.995 W/kg; SAR(10 g) = 0.684 W/kg
Maximum value of SAR (measured) = 1.24 W/kg

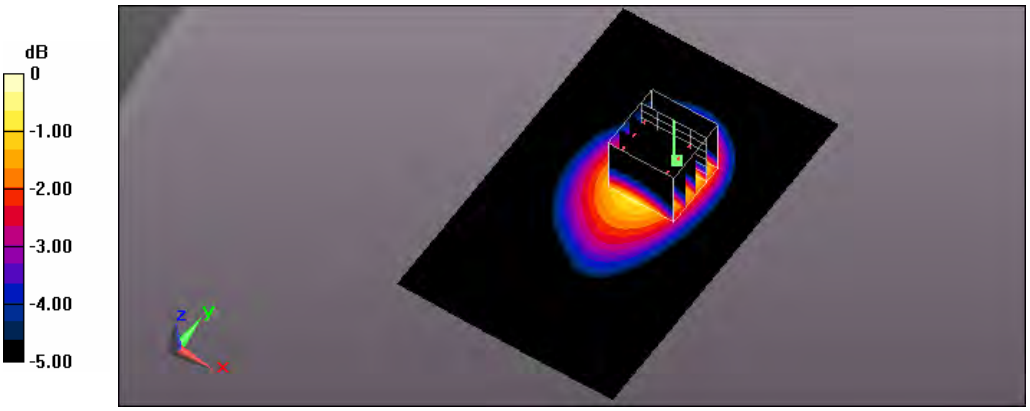

0 dB = 1.24 W/kg = 0.93 dBW/kg

Test Laboratory: A Test Lab Techno Corp.
Date: 2014/11/17Time: PM 11:15:47
211_Flat_LTE Band17 BW 10M CH23780_QPSK with 1 RB Size 0 RB Offset_original 131_side 1 surface to phantom 10mm_measurement second
DUT: AC785S-500;Type: WWAN Mobile Hotspot Portable Device;Serial: 014197000002053
Communication System: UID 0, Generic LTE (0);Frequency: 709 MHz;Duty Cycle: 1:1
Medium parameters used: f = 709 MHz; σ = 0.946 S/m; ε_r = 54.006; ρ = 1000 kg/m^3
Phantom section: Flat Section
Measurement Standard: DASY5 (IEEE/IEC/ANSI C63.19-2011)
DASY Configuration:

- Area Scan setting - Find Secondary Maximum Within:2.0dB and with a peak SAR value greater than 0.5 W/Kg
- Probe: EX3DV4 - SN3977;ConvF(9.78, 9.78, 9.78); Calibrated: 2014/2/17;
- Sensor-Surface: 2mm (Mechanical Surface Detection)
- Electronics: DAE4 Sn779;Calibrated: 2014/2/25
- Phantom: ELI v5.0;Type: QDOVA002AA;Serial: TP:1133
- Measurement SW: DASY52, Version 52.8 (7);SEMCAD X Version 14.6.10 (7164)

Flat/Area Scan (71x111x1):
Interpolated grid: dx=1.500 mm, dy=1.500 mm
Maximum value of SAR (interpolated) = 1.24 W/kg

Flat/Zoom Scan (5x5x7)/Cube 0:
Measurement grid: dx=8mm, dy=8mm, dz=5mm
Reference Value = 30.811 V/m; Power Drift = -0.03 dB
Peak SAR (extrapolated) = 1.46 W/kg
SAR(1 g) = 0.992 W/kg; SAR(10 g) = 0.681 W/kg
Maximum value of SAR (measured) = 1.24 W/kg

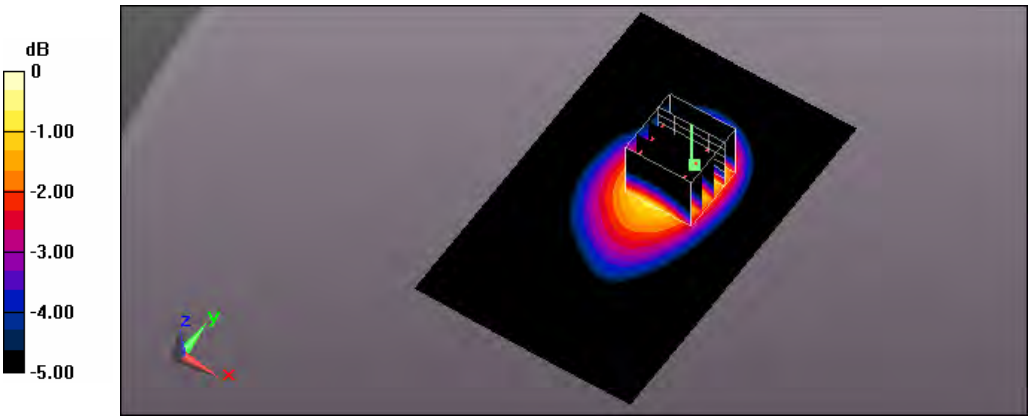

0 dB = 1.24 W/kg = 0.93 dBW/kg

Test Laboratory: A Test Lab Techno Corp.
Date: 2014/9/24Time: PM 11:44:18
148_Flat_802.11b CH1_1M_side 1 surface to phantom 10mm_MIMO
DUT: AC785S-500;Type: WWAN Mobile Hotspot Portable Device;Serial: 014197000002053
Communication System: UID 0, IEEE 802.11b (0);Frequency: 2412 MHz;Duty Cycle: 1:1
Medium parameters used: f = 2412 MHz; σ = 1.927 S/m; ε_r = 53.982; ρ = 1000 kg/m^3
Phantom section: Flat Section
Measurement Standard: DASY5 (IEEE/IEC/ANSI C63.19-2011)
DASY Configuration:

- Area Scan setting - Find Secondary Maximum Within:2.0dB and with a peak SAR value greater than 0.5 W/Kg
- Probe: EX3DV4 - SN3977;ConvF(6.97, 6.97, 6.97); Calibrated: 2014/2/17;
- Sensor-Surface: 2mm (Mechanical Surface Detection)
- Electronics: DAE4 Sn779;Calibrated: 2014/2/25
- Phantom: ELI v5.0;Type: QDOVA002AA;Serial: TP:1133
- Measurement SW: DASY52, Version 52.8 (7);SEMCAD X Version 14.6.10 (7164)

Flat/Area Scan (101x161x1):
Interpolated grid: dx=1.000 mm, dy=1.000 mm
Maximum value of SAR (interpolated) = 0.0428 W/kg

Flat/Zoom Scan (7x7x7)/Cube 0:
Measurement grid: dx=5mm, dy=5mm, dz=5mm
Reference Value = 2.068 V/m; Power Drift = 0.19 dB
Peak SAR (extrapolated) = 0.0590 W/kg
SAR(1 g) = 0.029 W/kg; SAR(10 g) = 0.015 W/kg
Maximum value of SAR (measured) = 0.0437 W/kg

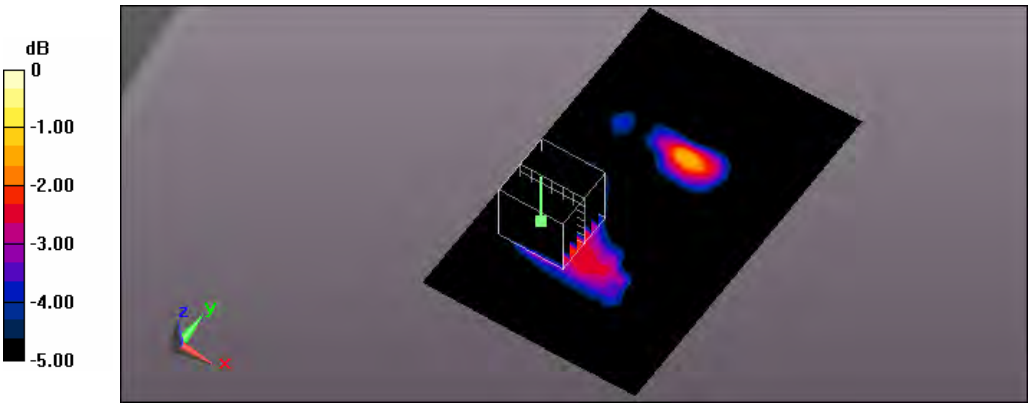

0 dB = 0.0437 W/kg = -13.60 dBW/kg

Test Laboratory: A Test Lab Techno Corp.
Date: 2014/9/24Time: PM 09:30:45
213_Flat_802.11b CH1_1M_side 2 surface to phantom 10mm_MIMO
DUT: AC785S-500;Type: WWAN Mobile Hotspot Portable Device;Serial: 014197000002053
Communication System: UID 0, IEEE 802.11b (0);Frequency: 2412 MHz;Duty Cycle: 1:1
Medium parameters used: f = 2412 MHz; σ = 1.927 S/m; ε_r = 53.982; ρ = 1000 kg/m^3
Phantom section: Flat Section
Measurement Standard: DASY5 (IEEE/IEC/ANSI C63.19-2011)
DASY Configuration:

- Area Scan setting - Find Secondary Maximum Within:2.0dB and with a peak SAR value greater than 0.5 W/Kg
- Probe: EX3DV4 - SN3977;ConvF(6.97, 6.97, 6.97); Calibrated: 2014/2/17;
- Sensor-Surface: 2mm (Mechanical Surface Detection)
- Electronics: DAE4 Sn779;Calibrated: 2014/2/25
- Phantom: ELI v5.0;Type: QDOVA002AA;Serial: TP:1133
- Measurement SW: DASY52, Version 52.8 (7);SEMCAD X Version 14.6.10 (7164)

Flat/Area Scan (101x161x1):
Interpolated grid: dx=1.000 mm, dy=1.000 mm
Maximum value of SAR (interpolated) = 0.0462 W/kg

Flat/Zoom Scan (7x7x7)/Cube 0:
Measurement grid: dx=5mm, dy=5mm, dz=5mm
Reference Value = 4.464 V/m; Power Drift = -0.10 dB
Peak SAR (extrapolated) = 0.0590 W/kg
SAR(1 g) = 0.034 W/kg; SAR(10 g) = 0.019 W/kg
Maximum value of SAR (measured) = 0.0462 W/kg

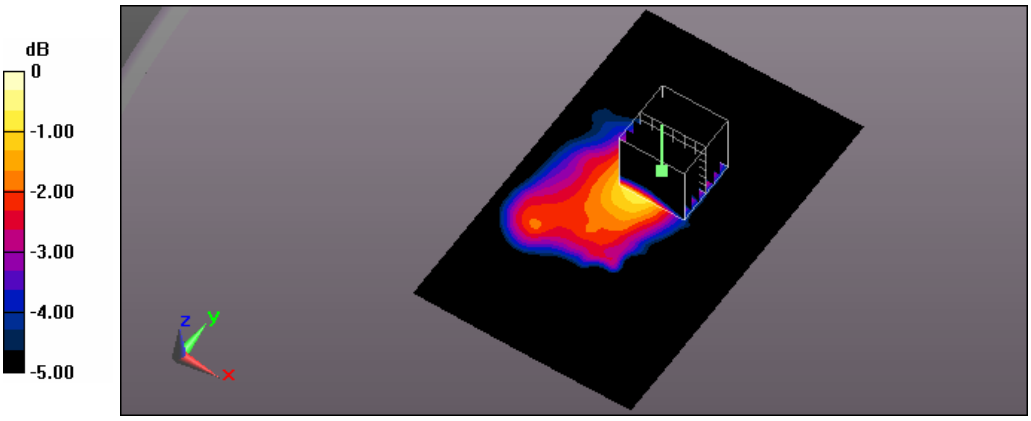

0 dB = 0.0462 W/kg = -13.35 dBW/kg

Test Laboratory: A Test Lab Techno Corp.
Date: 2014/9/24Time: PM 10:24:17
149_Flat_802.11b CH1_1M_side 3 surface to phantom 10mm_MIMO
DUT: AC785S-500;Type: WWAN Mobile Hotspot Portable Device;Serial: 014197000002053
Communication System: UID 0, IEEE 802.11b (0);Frequency: 2412 MHz;Duty Cycle: 1:1
Medium parameters used: f = 2412 MHz; σ = 1.927 S/m; ε_r = 53.982; ρ = 1000 kg/m^3
Phantom section: Flat Section
Measurement Standard: DASY5 (IEEE/IEC/ANSI C63.19-2011)
DASY Configuration:

- Area Scan setting - Find Secondary Maximum Within:2.0dB and with a peak SAR value greater than 0.5 W/Kg
- Probe: EX3DV4 - SN3977;ConvF(6.97, 6.97, 6.97); Calibrated: 2014/2/17;
- Sensor-Surface: 2mm (Mechanical Surface Detection)
- Electronics: DAE4 Sn779;Calibrated: 2014/2/25
- Phantom: ELI v5.0;Type: QDOVA002AA;Serial: TP:1133
- Measurement SW: DASY52, Version 52.8 (7);SEMCAD X Version 14.6.10 (7164)

Flat/Area Scan (91x161x1):
Interpolated grid: dx=1.000 mm, dy=1.000 mm
Maximum value of SAR (interpolated) = 0.0609 W/kg

Flat/Zoom Scan (7x7x7)/Cube 0:
Measurement grid: dx=5mm, dy=5mm, dz=5mm
Reference Value = 1.883 V/m; Power Drift = 0.15 dB
Peak SAR (extrapolated) = 0.0790 W/kg
SAR(1 g) = 0.040 W/kg; SAR(10 g) = 0.019 W/kg
Maximum value of SAR (measured) = 0.0588 W/kg

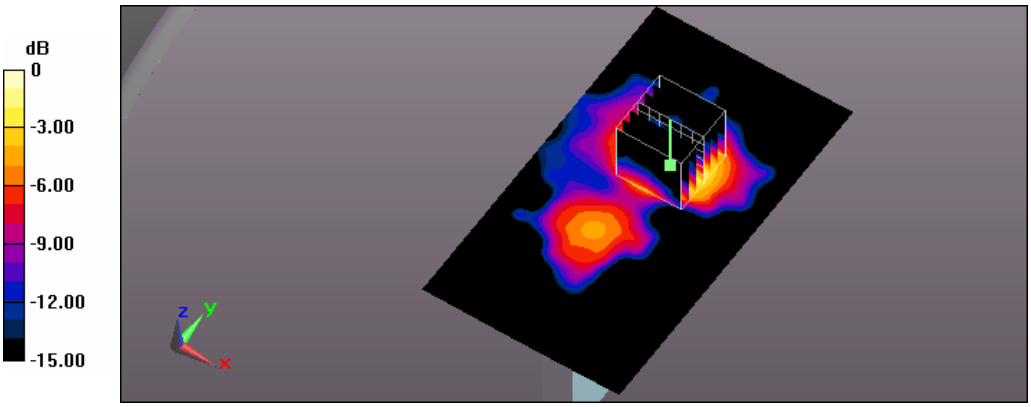

0 dB = 0.0588 W/kg = -12.31 dBW/kg

Test Laboratory: A Test Lab Techno Corp.
Date: 2014/9/24Time: PM 11:20:01
195_Flat_802.11b CH1_1M_side 6 surface to phantom 10mm_MIMO
DUT: AC785S-500;Type: WWAN Mobile Hotspot Portable Device;Serial: 014197000002053
Communication System: UID 0, IEEE 802.11b (0);Frequency: 2412 MHz;Duty Cycle: 1:1
Medium parameters used: f = 2412 MHz; σ = 1.927 S/m; ε_r = 53.982; ρ = 1000 kg/m^3
Phantom section: Flat Section
Measurement Standard: DASY5 (IEEE/IEC/ANSI C63.19-2011)
DASY Configuration:

- Area Scan setting - Find Secondary Maximum Within:2.0dB and with a peak SAR value greater than 0.5 W/Kg
- Probe: EX3DV4 - SN3977;ConvF(6.97, 6.97, 6.97); Calibrated: 2014/2/17;
- Sensor-Surface: 2mm (Mechanical Surface Detection)
- Electronics: DAE4 Sn779;Calibrated: 2014/2/25
- Phantom: ELI v5.0;Type: QDOVA002AA;Serial: TP:1133
- Measurement SW: DASY52, Version 52.8 (7);SEMCAD X Version 14.6.10 (7164)

Flat/Area Scan (91x161x1):
Interpolated grid: dx=1.000 mm, dy=1.000 mm
Maximum value of SAR (interpolated) = 0.00676 W/kg

Flat/Zoom Scan (7x7x7)/Cube 0:
Measurement grid: dx=5mm, dy=5mm, dz=5mm
Reference Value = 0.751 V/m; Power Drift = 0.13 dB
Peak SAR (extrapolated) = 0.0150 W/kg
SAR(1 g) = 0.00219 W/kg; SAR(10 g) = 0.000465 W/kg
Maximum value of SAR (measured) = 0.00683 W/kg

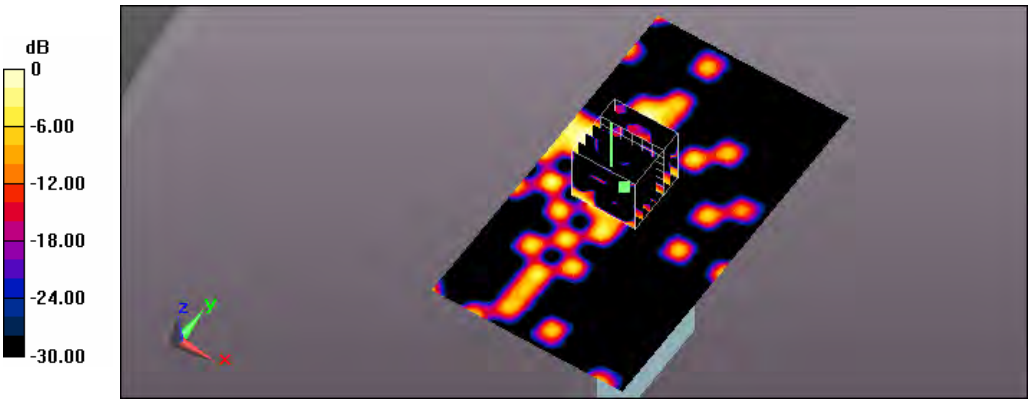

0 dB = 0.00683 W/kg = -21.66 dBW/kg

Test Laboratory: A Test Lab Techno Corp.
Date: 2014/9/25Time: AM 12:26:21
150_Flat_802.11g CH6_6M_side 1 surface to phantom 10mm_MIMO
DUT: AC785S-500;Type: WWAN Mobile Hotspot Portable Device;Serial: 014197000002053
Communication System: UID 0, IEEE 802.11g (0);Frequency: 2437 MHz;Duty Cycle: 1:1
Medium parameters used: f = 2437 MHz; σ = 1.988 S/m; ε_r = 54.297; ρ = 1000 kg/m^3
Phantom section: Flat Section
Measurement Standard: DASY5 (IEEE/IEC/ANSI C63.19-2011)
DASY Configuration:

- Area Scan setting - Find Secondary Maximum Within:2.0dB and with a peak SAR value greater than 0.5 W/Kg
- Probe: EX3DV4 - SN3977;ConvF(6.97, 6.97, 6.97); Calibrated: 2014/2/17;
- Sensor-Surface: 2mm (Mechanical Surface Detection)
- Electronics: DAE4 Sn779;Calibrated: 2014/2/25
- Phantom: ELI v5.0;Type: QDOVA002AA;Serial: TP:1133
- Measurement SW: DASY52, Version 52.8 (7);SEMCAD X Version 14.6.10 (7164)

Flat/Area Scan (101x161x1):
Interpolated grid: dx=1.000 mm, dy=1.000 mm
Maximum value of SAR (interpolated) = 0.0543 W/kg

Flat/Zoom Scan (7x7x7)/Cube 0:
Measurement grid: dx=5mm, dy=5mm, dz=5mm
Reference Value = 2.819 V/m; Power Drift = -0.13 dB
Peak SAR (extrapolated) = 0.0770 W/kg
SAR(1 g) = 0.033 W/kg; SAR(10 g) = 0.015 W/kg
Maximum value of SAR (measured) = 0.0523 W/kg

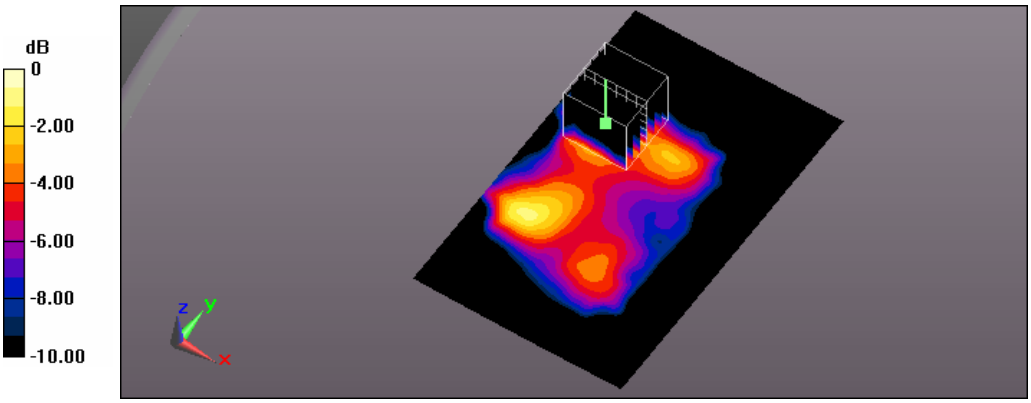

0 dB = 0.0523 W/kg = -12.81 dBW/kg

Test Laboratory: A Test Lab Techno Corp.
Date: 2014/9/25Time: AM 01:35:27
151_Flat_802.11g CH6_6M_side 2 surface to phantom 10mm_MIMO
DUT: AC785S-500;Type: WWAN Mobile Hotspot Portable Device;Serial: 014197000002053
Communication System: UID 0, IEEE 802.11g (0);Frequency: 2437 MHz;Duty Cycle: 1:1
Medium parameters used: f = 2437 MHz; σ = 1.988 S/m; ε_r = 54.297; ρ = 1000 kg/m^3
Phantom section: Flat Section
Measurement Standard: DASY5 (IEEE/IEC/ANSI C63.19-2011)
DASY Configuration:

- Area Scan setting - Find Secondary Maximum Within:2.0dB and with a peak SAR value greater than 0.5 W/Kg
- Probe: EX3DV4 - SN3977;ConvF(6.97, 6.97, 6.97); Calibrated: 2014/2/17;
- Sensor-Surface: 2mm (Mechanical Surface Detection)
- Electronics: DAE4 Sn779;Calibrated: 2014/2/25
- Phantom: ELI v5.0;Type: QDOVA002AA;Serial: TP:1133
- Measurement SW: DASY52, Version 52.8 (7);SEMCAD X Version 14.6.10 (7164)

Flat/Area Scan (101x161x1):
Interpolated grid: dx=1.000 mm, dy=1.000 mm
Maximum value of SAR (interpolated) = 0.0385 W/kg

Flat/Zoom Scan (7x7x7)/Cube 0:
Measurement grid: dx=5mm, dy=5mm, dz=5mm
Reference Value = 3.870 V/m; Power Drift = -0.04 dB
Peak SAR (extrapolated) = 0.0510 W/kg
SAR(1 g) = 0.027 W/kg; SAR(10 g) = 0.015 W/kg
Maximum value of SAR (measured) = 0.0379 W/kg

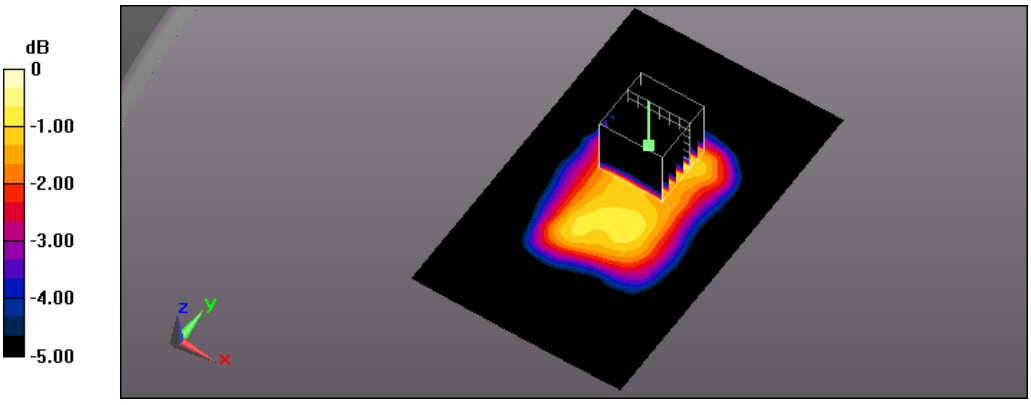

0 dB = 0.0379 W/kg = -14.21 dBW/kg

Test Laboratory: A Test Lab Techno Corp.
Date: 2014/9/25Time: AM 02:38:08
152_Flat_802.11g CH6_6M_side 3 surface to phantom 10mm_MIMO
DUT: AC785S-500;Type: WWAN Mobile Hotspot Portable Device;Serial: 014197000002053
Communication System: UID 0, IEEE 802.11g (0);Frequency: 2437 MHz;Duty Cycle: 1:1
Medium parameters used: f = 2437 MHz; σ = 1.988 S/m; ε_r = 54.297; ρ = 1000 kg/m^3
Phantom section: Flat Section
Measurement Standard: DASY5 (IEEE/IEC/ANSI C63.19-2011)
DASY Configuration:

- Area Scan setting - Find Secondary Maximum Within:2.0dB and with a peak SAR value greater than 0.5 W/Kg
- Probe: EX3DV4 - SN3977;ConvF(6.97, 6.97, 6.97); Calibrated: 2014/2/17;
- Sensor-Surface: 2mm (Mechanical Surface Detection)
- Electronics: DAE4 Sn779;Calibrated: 2014/2/25
- Phantom: ELI v5.0;Type: QDOVA002AA;Serial: TP:1133
- Measurement SW: DASY52, Version 52.8 (7);SEMCAD X Version 14.6.10 (7164)

Flat/Area Scan (91x161x1):
Interpolated grid: dx=1.000 mm, dy=1.000 mm
Maximum value of SAR (interpolated) = 0.0350 W/kg

Flat/Zoom Scan (7x7x7)/Cube 0:
Measurement grid: dx=5mm, dy=5mm, dz=5mm
Reference Value = 2.831 V/m; Power Drift = -0.18 dB
Peak SAR (extrapolated) = 0.0530 W/kg
SAR(1 g) = 0.025 W/kg; SAR(10 g) = 0.012 W/kg
Maximum value of SAR (measured) = 0.0378 W/kg

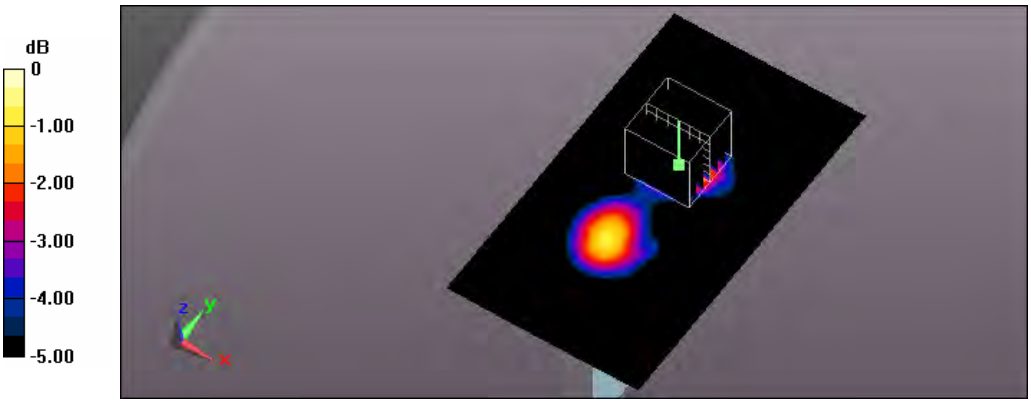

0 dB = 0.0378 W/kg = -14.23 dBW/kg

Test Laboratory: A Test Lab Techno Corp.
Date: 2014/9/25Time: AM 07:30:50
196_Flat_802.11g CH6_6M_side 6 surface to phantom 10mm_MIMO
DUT: AC785S-500;Type: WWAN Mobile Hotspot Portable Device;Serial: 014197000002053
Communication System: UID 0, IEEE 802.11g (0);Frequency: 2437 MHz;Duty Cycle: 1:1
Medium parameters used: f = 2437 MHz; σ = 1.988 S/m; ε_r = 54.297; ρ = 1000 kg/m^3
Phantom section: Flat Section
Measurement Standard: DASY5 (IEEE/IEC/ANSI C63.19-2011)
DASY Configuration:

- Area Scan setting - Find Secondary Maximum Within:2.0dB and with a peak SAR value greater than 0.5 W/Kg
- Probe: EX3DV4 - SN3977;ConvF(6.97, 6.97, 6.97); Calibrated: 2014/2/17;
- Sensor-Surface: 2mm (Mechanical Surface Detection)
- Electronics: DAE4 Sn779;Calibrated: 2014/2/25
- Phantom: ELI v5.0;Type: QDOVA002AA;Serial: TP:1133
- Measurement SW: DASY52, Version 52.8 (7);SEMCAD X Version 14.6.10 (7164)

Flat/Area Scan (91x161x1):
Interpolated grid: dx=1.000 mm, dy=1.000 mm
Maximum value of SAR (interpolated) = 0.0137 W/kg

Flat/Zoom Scan (7x7x7)/Cube 0:
Measurement grid: dx=5mm, dy=5mm, dz=5mm
Reference Value = 1.173 V/m; Power Drift = -0.03 dB
Peak SAR (extrapolated) = 0.00619 W/kg
SAR(1 g) = 0.000551 W/kg; SAR(10 g) = 0.000151 W/kg
Maximum value of SAR (measured) = 0.00467 W/kg

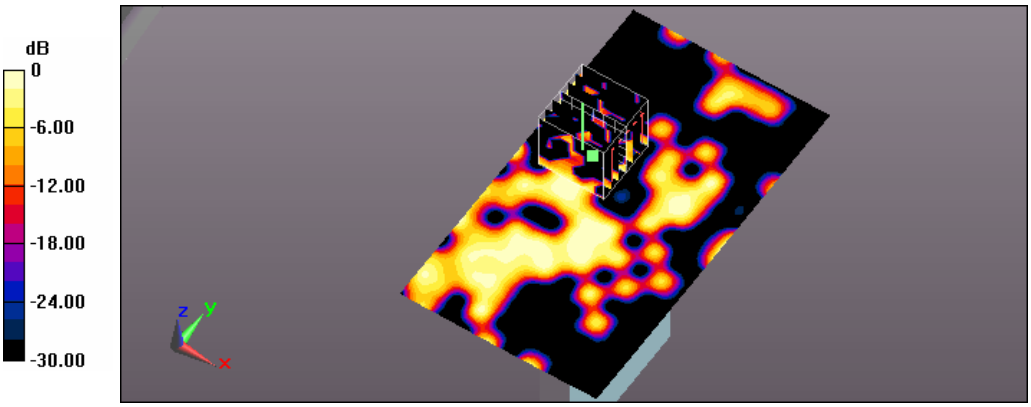

0 dB = 0.00467 W/kg = -23.31 dBW/kg

Test Laboratory: A Test Lab Techno Corp.
Date: 2014/9/25Time: AM 05:57:25
153_Flat_802.11n20 CH6_13M_side 1 surface to phantom 10mm_MIMO
DUT: AC785S-500;Type: WWAN Mobile Hotspot Portable Device;Serial: 014197000002053
Communication System: UID 0, IEEE 802.11n(2.4GHz) (0);Frequency: 2437 MHz;Duty Cycle: 1:1
Medium parameters used: f = 2437 MHz; σ = 1.988 S/m; ε_r = 54.297; ρ = 1000 kg/m^3
Phantom section: Flat Section
Measurement Standard: DASY5 (IEEE/IEC/ANSI C63.19-2011)
DASY Configuration:

- Area Scan setting - Find Secondary Maximum Within:2.0dB and with a peak SAR value greater than 0.5 W/Kg
- Probe: EX3DV4 - SN3977;ConvF(6.97, 6.97, 6.97); Calibrated: 2014/2/17;
- Sensor-Surface: 2mm (Mechanical Surface Detection)
- Electronics: DAE4 Sn779;Calibrated: 2014/2/25
- Phantom: ELI v5.0;Type: QDOVA002AA;Serial: TP:1133
- Measurement SW: DASY52, Version 52.8 (7);SEMCAD X Version 14.6.10 (7164)

Flat/Area Scan (101x161x1):
Interpolated grid: dx=1.000 mm, dy=1.000 mm
Maximum value of SAR (interpolated) = 0.0608 W/kg

Flat/Zoom Scan (7x7x7)/Cube 0:
Measurement grid: dx=5mm, dy=5mm, dz=5mm
Reference Value = 2.840 V/m; Power Drift = -0.02 dB
Peak SAR (extrapolated) = 0.0880 W/kg
SAR(1 g) = 0.038 W/kg; SAR(10 g) = 0.017 W/kg
Maximum value of SAR (measured) = 0.0600 W/kg

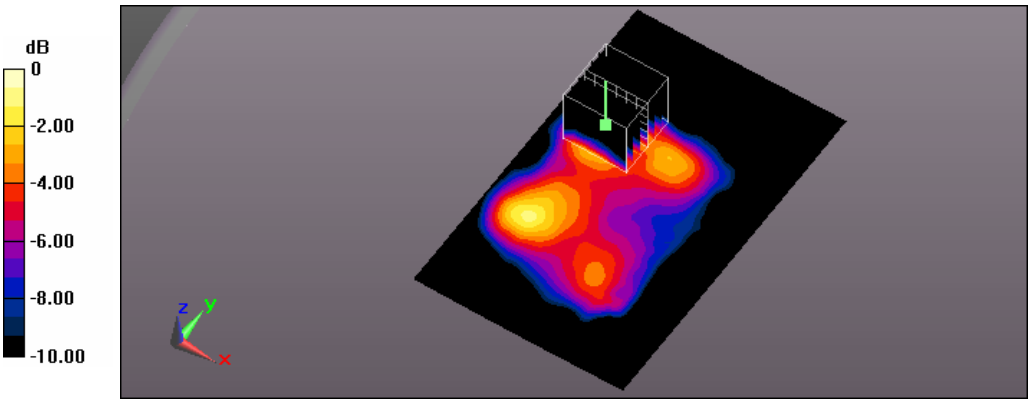

0 dB = 0.0600 W/kg = -12.22 dBW/kg

Test Laboratory: A Test Lab Techno Corp.
Date: 2014/9/25Time: AM 05:19:32
154_Flat_802.11n20 CH6_13M_side 2 surface to phantom 10mm_MIMO
DUT: AC785S-500;Type: WWAN Mobile Hotspot Portable Device;Serial: 014197000002053
Communication System: UID 0, IEEE 802.11n(2.4GHz) (0);Frequency: 2437 MHz;Duty Cycle: 1:1
Medium parameters used: f = 2437 MHz; σ = 1.988 S/m; ε_r = 54.297; ρ = 1000 kg/m^3
Phantom section: Flat Section
Measurement Standard: DASY5 (IEEE/IEC/ANSI C63.19-2011)
DASY Configuration:

- Area Scan setting - Find Secondary Maximum Within:2.0dB and with a peak SAR value greater than 0.5 W/Kg
- Probe: EX3DV4 - SN3977;ConvF(6.97, 6.97, 6.97); Calibrated: 2014/2/17;
- Sensor-Surface: 2mm (Mechanical Surface Detection)
- Electronics: DAE4 Sn779;Calibrated: 2014/2/25
- Phantom: ELI v5.0;Type: QDOVA002AA;Serial: TP:1133
- Measurement SW: DASY52, Version 52.8 (7);SEMCAD X Version 14.6.10 (7164)

Flat/Area Scan (101x161x1):
Interpolated grid: dx=1.000 mm, dy=1.000 mm
Maximum value of SAR (interpolated) = 0.0397 W/kg

Flat/Zoom Scan (7x7x7)/Cube 0:
Measurement grid: dx=5mm, dy=5mm, dz=5mm
Reference Value = 4.019 V/m; Power Drift = 0.05 dB
Peak SAR (extrapolated) = 0.0530 W/kg
SAR(1 g) = 0.028 W/kg; SAR(10 g) = 0.016 W/kg
Maximum value of SAR (measured) = 0.0392 W/kg

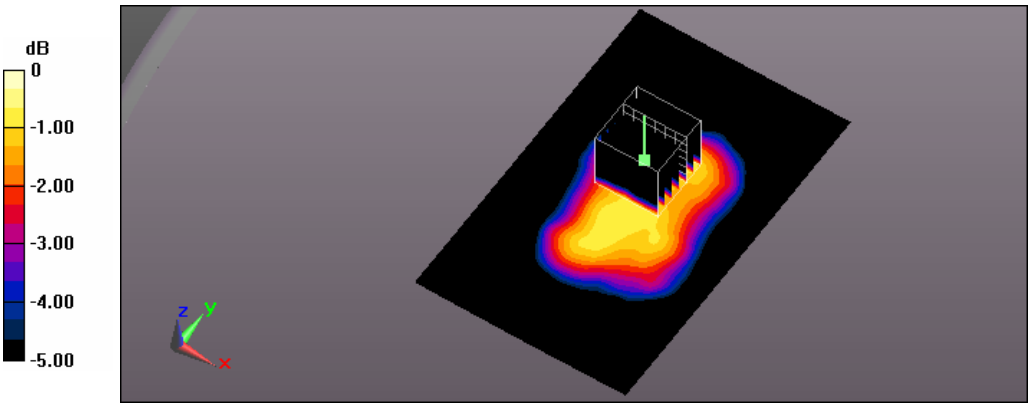

0 dB = 0.0392 W/kg = -14.07 dBW/kg

Test Laboratory: A Test Lab Techno Corp.
Date: 2014/9/25Time: AM 03:17:11
155_Flat_802.11n20 CH6_13M_side 3 surface to phantom 10mm_MIMO
DUT: AC785S-500;Type: WWAN Mobile Hotspot Portable Device;Serial: 014197000002053
Communication System: UID 0, IEEE 802.11n(2.4GHz) (0);Frequency: 2437 MHz;Duty Cycle: 1:1
Medium parameters used: f = 2437 MHz; σ = 1.988 S/m; ε_r = 54.297; ρ = 1000 kg/m^3
Phantom section: Flat Section
Measurement Standard: DASY5 (IEEE/IEC/ANSI C63.19-2011)
DASY Configuration:

- Area Scan setting - Find Secondary Maximum Within:2.0dB and with a peak SAR value greater than 0.5 W/Kg
- Probe: EX3DV4 - SN3977;ConvF(6.97, 6.97, 6.97); Calibrated: 2014/2/17;
- Sensor-Surface: 2mm (Mechanical Surface Detection)
- Electronics: DAE4 Sn779;Calibrated: 2014/2/25
- Phantom: ELI v5.0;Type: QDOVA002AA;Serial: TP:1133
- Measurement SW: DASY52, Version 52.8 (7);SEMCAD X Version 14.6.10 (7164)

Flat/Area Scan (91x161x1):
Interpolated grid: dx=1.000 mm, dy=1.000 mm
Maximum value of SAR (interpolated) = 0.0341 W/kg

Flat/Zoom Scan (7x7x7)/Cube 0:
Measurement grid: dx=5mm, dy=5mm, dz=5mm
Reference Value = 2.424 V/m; Power Drift = 0.17 dB
Peak SAR (extrapolated) = 0.0480 W/kg
SAR(1 g) = 0.023 W/kg; SAR(10 g) = 0.011 W/kg
Maximum value of SAR (measured) = 0.0335 W/kg

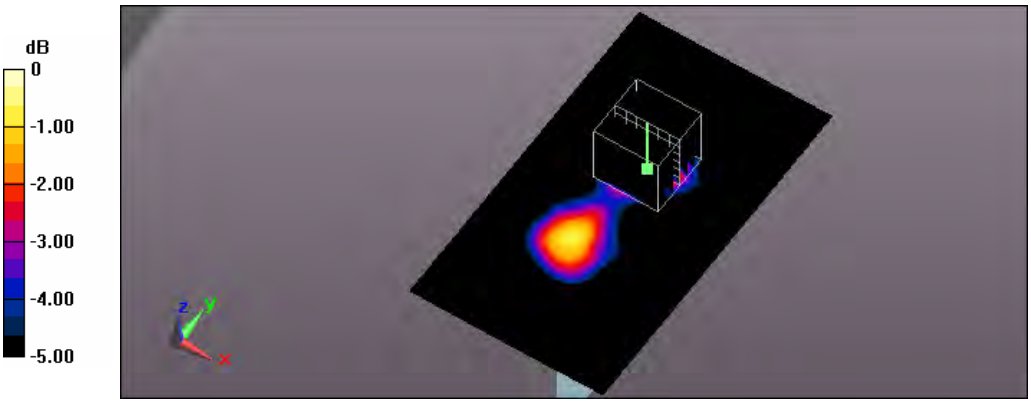

0 dB = 0.0335 W/kg = -14.75 dBW/kg

Test Laboratory: A Test Lab Techno Corp.
Date: 2014/9/25Time: AM 08:27:38
197_Flat_802.11n20 CH6_13M_side 6 surface to phantom 10mm_MIMO
DUT: AC785S-500;Type: WWAN Mobile Hotspot Portable Device;Serial: 014197000002053
Communication System: UID 0, IEEE 802.11n(2.4GHz) (0);Frequency: 2437 MHz;Duty Cycle: 1:1
Medium parameters used: f = 2437 MHz; σ = 1.988 S/m; ε_r = 54.297; ρ = 1000 kg/m^3
Phantom section: Flat Section
Measurement Standard: DASY5 (IEEE/IEC/ANSI C63.19-2011)
DASY Configuration:

- Area Scan setting - Find Secondary Maximum Within:2.0dB and with a peak SAR value greater than 0.5 W/Kg
- Probe: EX3DV4 - SN3977;ConvF(6.97, 6.97, 6.97); Calibrated: 2014/2/17;
- Sensor-Surface: 2mm (Mechanical Surface Detection)
- Electronics: DAE4 Sn779;Calibrated: 2014/2/25
- Phantom: ELI v5.0;Type: QDOVA002AA;Serial: TP:1133
- Measurement SW: DASY52, Version 52.8 (7);SEMCAD X Version 14.6.10 (7164)

Flat/Area Scan (91x161x1):
Interpolated grid: dx=1.000 mm, dy=1.000 mm
Maximum value of SAR (interpolated) = 0.0171 W/kg

Flat/Zoom Scan (7x7x7)/Cube 0:
Measurement grid: dx=5mm, dy=5mm, dz=5mm
Reference Value = 0.769 V/m; Power Drift = 0.14 dB
Peak SAR (extrapolated) = 0.0120 W/kg
SAR(1 g) = 0.00163 W/kg; SAR(10 g) = 0.000397 W/kg
Maximum value of SAR (measured) = 0.00610 W/kg

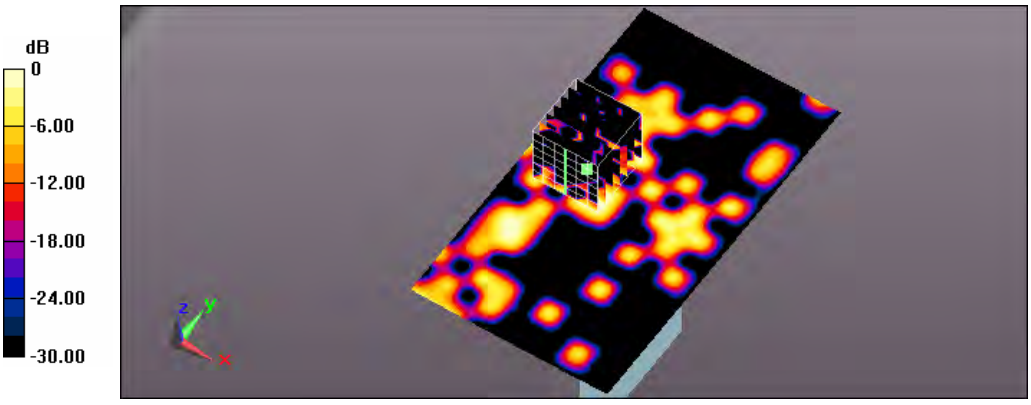

0 dB = 0.00610 W/kg = -22.15 dBW/kg

Test Laboratory: A Test Lab Techno Corp.
Date: 2014/9/25Time: AM 06:34:03
156_Flat_802.11n40 CH6_27M_side 1 surface to phantom 10mm_MIMO
DUT: AC785S-500;Type: WWAN Mobile Hotspot Portable Device;Serial: 014197000002053
Communication System: UID 0, IEEE 802.11n(2.4GHz) (0);Frequency: 2437 MHz;Duty Cycle: 1:1
Medium parameters used: f = 2437 MHz; σ = 1.988 S/m; ε_r = 54.297; ρ = 1000 kg/m^3
Phantom section: Flat Section
Measurement Standard: DASY5 (IEEE/IEC/ANSI C63.19-2011)
DASY Configuration:

- Area Scan setting - Find Secondary Maximum Within:2.0dB and with a peak SAR value greater than 0.5 W/Kg
- Probe: EX3DV4 - SN3977;ConvF(6.97, 6.97, 6.97); Calibrated: 2014/2/17;
- Sensor-Surface: 2mm (Mechanical Surface Detection)
- Electronics: DAE4 Sn779;Calibrated: 2014/2/25
- Phantom: ELI v5.0;Type: QDOVA002AA;Serial: TP:1133
- Measurement SW: DASY52, Version 52.8 (7);SEMCAD X Version 14.6.10 (7164)

Flat/Area Scan (101x161x1):
Interpolated grid: dx=1.000 mm, dy=1.000 mm
Maximum value of SAR (interpolated) = 0.0832 W/kg

Flat/Zoom Scan (7x7x7)/Cube 0:
Measurement grid: dx=5mm, dy=5mm, dz=5mm
Reference Value = 3.633 V/m; Power Drift = 0.08 dB
Peak SAR (extrapolated) = 0.112 W/kg
SAR(1 g) = 0.053 W/kg; SAR(10 g) = 0.026 W/kg
Maximum value of SAR (measured) = 0.0801 W/kg

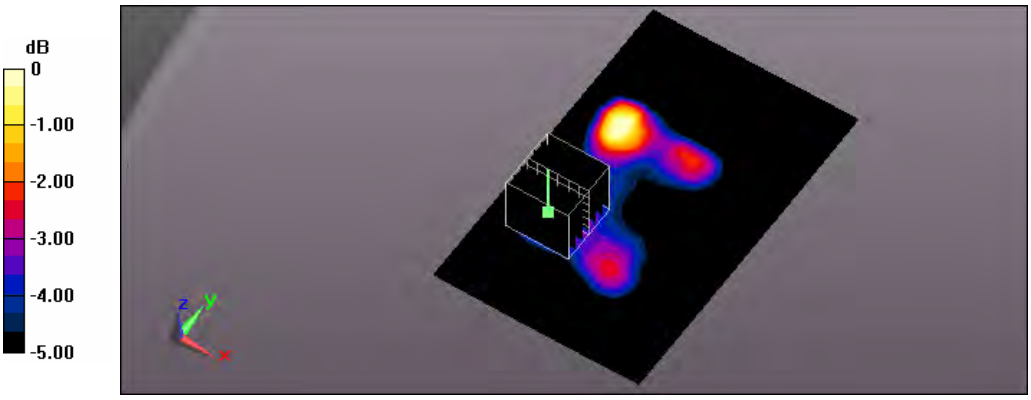

0 dB = 0.0801 W/kg = -10.96 dBW/kg

Test Laboratory: A Test Lab Techno Corp.
Date: 2014/9/25Time: AM 04:42:16
157_Flat_802.11n40 CH6_27M_side 2 surface to phantom 10mm_MIMO
DUT: AC785S-500;Type: WWAN Mobile Hotspot Portable Device;Serial: 014197000002053
Communication System: UID 0, IEEE 802.11n(2.4GHz) (0);Frequency: 2437 MHz;Duty Cycle: 1:1
Medium parameters used: f = 2437 MHz; σ = 1.988 S/m; ε_r = 54.297; ρ = 1000 kg/m^3
Phantom section: Flat Section
Measurement Standard: DASY5 (IEEE/IEC/ANSI C63.19-2011)
DASY Configuration:

- Area Scan setting - Find Secondary Maximum Within:2.0dB and with a peak SAR value greater than 0.5 W/Kg
- Probe: EX3DV4 - SN3977;ConvF(6.97, 6.97, 6.97); Calibrated: 2014/2/17;
- Sensor-Surface: 2mm (Mechanical Surface Detection)
- Electronics: DAE4 Sn779;Calibrated: 2014/2/25
- Phantom: ELI v5.0;Type: QDOVA002AA;Serial: TP:1133
- Measurement SW: DASY52, Version 52.8 (7);SEMCAD X Version 14.6.10 (7164)

Flat/Area Scan (101x161x1):
Interpolated grid: dx=1.000 mm, dy=1.000 mm
Maximum value of SAR (interpolated) = 0.0607 W/kg

Flat/Zoom Scan (7x7x7)/Cube 0:
Measurement grid: dx=5mm, dy=5mm, dz=5mm
Reference Value = 4.917 V/m; Power Drift = -0.02 dB
Peak SAR (extrapolated) = 0.0830 W/kg
SAR(1 g) = 0.044 W/kg; SAR(10 g) = 0.025 W/kg
Maximum value of SAR (measured) = 0.0625 W/kg

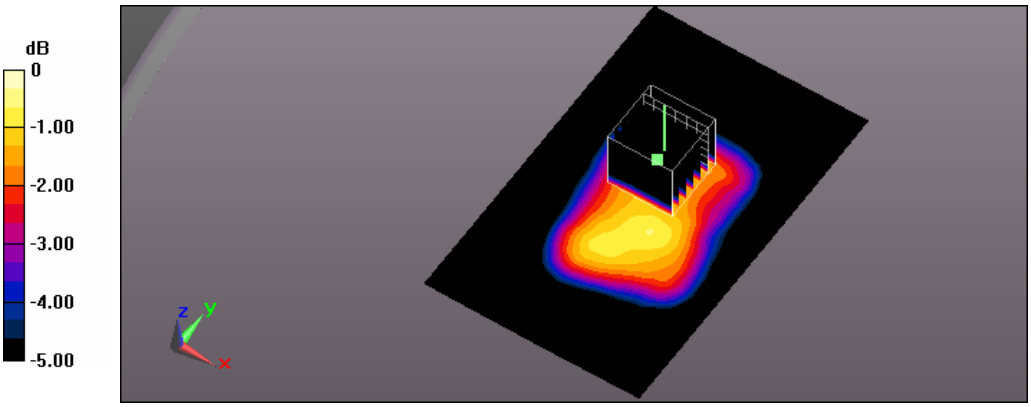

0 dB = 0.0625 W/kg = -12.04 dBW/kg

Test Laboratory: A Test Lab Techno Corp.
Date: 2014/9/25Time: AM 04:01:54
158_Flat_802.11n40 CH6_27M_side 3 surface to phantom 10mm_MIMO
DUT: AC785S-500;Type: WWAN Mobile Hotspot Portable Device;Serial: 014197000002053
Communication System: UID 0, IEEE 802.11n(2.4GHz) (0);Frequency: 2437 MHz;Duty Cycle: 1:1
Medium parameters used: f = 2437 MHz; σ = 1.988 S/m; ε_r = 54.297; ρ = 1000 kg/m^3
Phantom section: Flat Section
Measurement Standard: DASY5 (IEEE/IEC/ANSI C63.19-2011)
DASY Configuration:

- Area Scan setting - Find Secondary Maximum Within:2.0dB and with a peak SAR value greater than 0.5 W/Kg
- Probe: EX3DV4 - SN3977;ConvF(6.97, 6.97, 6.97); Calibrated: 2014/2/17;
- Sensor-Surface: 2mm (Mechanical Surface Detection)
- Electronics: DAE4 Sn779;Calibrated: 2014/2/25
- Phantom: ELI v5.0;Type: QDOVA002AA;Serial: TP:1133
- Measurement SW: DASY52, Version 52.8 (7);SEMCAD X Version 14.6.10 (7164)

Flat/Area Scan (91x161x1):
Interpolated grid: dx=1.000 mm, dy=1.000 mm
Maximum value of SAR (interpolated) = 0.0489 W/kg

Flat/Zoom Scan (7x7x7)/Cube 0:
Measurement grid: dx=5mm, dy=5mm, dz=5mm
Reference Value = 3.047 V/m; Power Drift = 0.12 dB
Peak SAR (extrapolated) = 0.0670 W/kg
SAR(1 g) = 0.034 W/kg; SAR(10 g) = 0.017 W/kg
Maximum value of SAR (measured) = 0.0489 W/kg

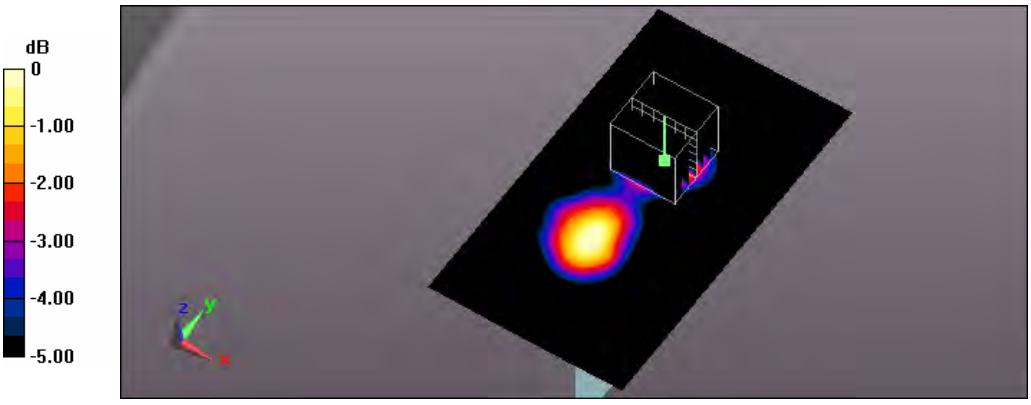

0 dB = 0.0489 W/kg = -13.11 dBW/kg

Test Laboratory: A Test Lab Techno Corp.
Date: 2014/9/25Time: AM 09:31:39
198_Flat_802.11n40 CH6_27M_side 6 surface to phantom 10mm_MIMO
DUT: AC785S-500;Type: WWAN Mobile Hotspot Portable Device;Serial: 014197000002053
Communication System: UID 0, IEEE 802.11n(2.4GHz) (0);Frequency: 2437 MHz;Duty Cycle: 1:1
Medium parameters used: f = 2437 MHz; σ = 1.988 S/m; ε_r = 54.297; ρ = 1000 kg/m^3
Phantom section: Flat Section
Measurement Standard: DASY5 (IEEE/IEC/ANSI C63.19-2011)
DASY Configuration:

- Area Scan setting - Find Secondary Maximum Within:2.0dB and with a peak SAR value greater than 0.5 W/Kg
- Probe: EX3DV4 - SN3977;ConvF(6.97, 6.97, 6.97); Calibrated: 2014/2/17;
- Sensor-Surface: 2mm (Mechanical Surface Detection)
- Electronics: DAE4 Sn779;Calibrated: 2014/2/25
- Phantom: ELI v5.0;Type: QDOVA002AA;Serial: TP:1133
- Measurement SW: DASY52, Version 52.8 (7);SEMCAD X Version 14.6.10 (7164)

Flat/Area Scan (91x161x1):
Interpolated grid: dx=1.000 mm, dy=1.000 mm
Maximum value of SAR (interpolated) = 0.00699 W/kg

Flat/Zoom Scan (7x7x7)/Cube 0:
Measurement grid: dx=5mm, dy=5mm, dz=5mm
Reference Value = 1.172 V/m; Power Drift = -0.12 dB
Peak SAR (extrapolated) = 0.00816 W/kg
SAR(1 g) = 0.000719 W/kg; SAR(10 g) = 0.00014 W/kg
Maximum value of SAR (measured) = 0.00433 W/kg

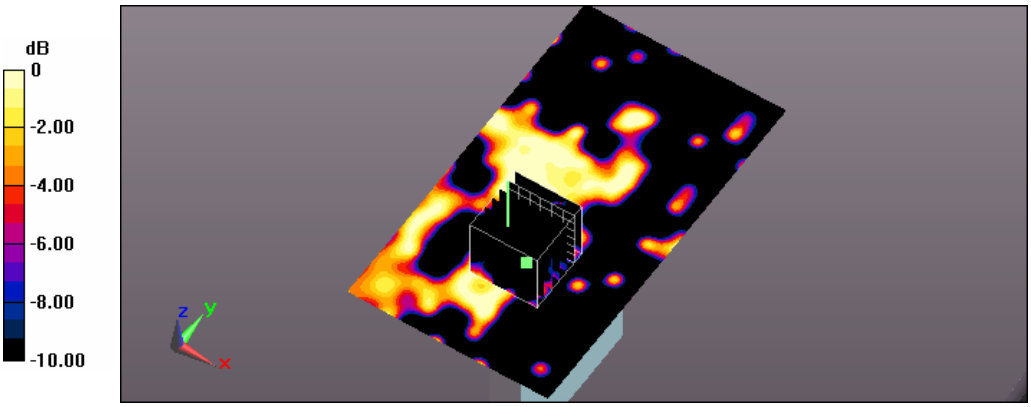

0 dB = 0.00433 W/kg = -23.64 dBW/kg

Test Laboratory: A Test Lab Techno Corp.
Date: 2014/11/7Time: PM 09:07:17
160_Flat_802.11a CH40_6M_side 1 surface to phantom 10mm_MIMO
DUT: AC785S-500;Type: WWAN Mobile Hotspot Portable Device;Serial: 014197000002053
Communication System: UID 0, IEEE 802.11a (0);Frequency: 5200 MHz;Duty Cycle: 1:1
Medium parameters used: f = 5200 MHz; σ = 5.52 S/m; ε_r = 47.76; ρ = 1000 kg/m^3
Phantom section: Flat Section
Measurement Standard: DASY5 (IEEE/IEC/ANSI C63.19-2011)
DASY Configuration:

- Area Scan setting - Find Secondary Maximum Within:2.0dB and with a peak SAR value greater than 0.5 W/Kg
- Probe: EX3DV4 - SN3977;ConvF(4.5, 4.5, 4.5); Calibrated: 2014/2/17;
- Sensor-Surface: 2mm (Mechanical Surface Detection)
- Electronics: DAE4 Sn779;Calibrated: 2014/2/25
- Phantom: ELI v5.0;Type: QDOVA002AA;Serial: TP:1133
- Measurement SW: DASY52, Version 52.8 (7);SEMCAD X Version 14.6.10 (7164)

Flat/Area Scan (101x161x1):
Interpolated grid: dx=1.000 mm, dy=1.000 mm
Maximum value of SAR (interpolated) = 0.159 W/kg

Flat/Zoom Scan (8x8x12)/Cube 0:
Measurement grid: dx=4mm, dy=4mm, dz=2mm
Reference Value = 2.196 V/m; Power Drift = 0.16 dB
Peak SAR (extrapolated) = 0.287 W/kg
SAR(1 g) = 0.074 W/kg; SAR(10 g) = 0.029 W/kg
Maximum value of SAR (measured) = 0.150 W/kg

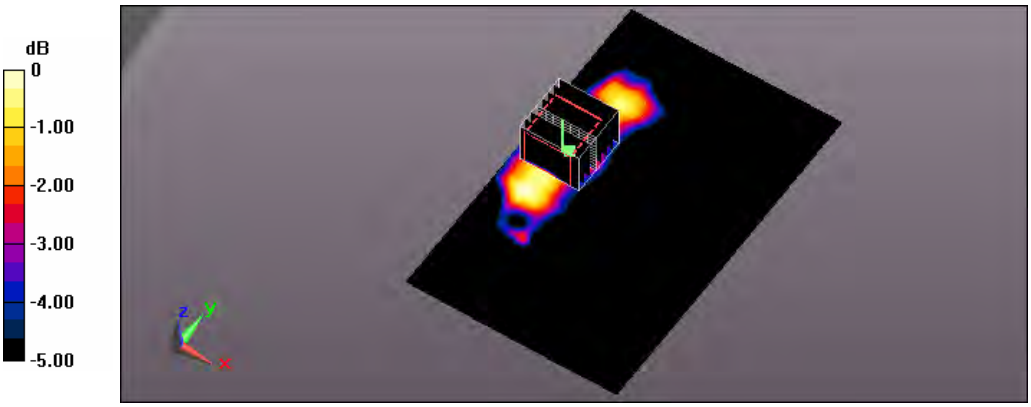

0 dB = 0.150 W/kg = -8.24 dBW/kg

Test Laboratory: A Test Lab Techno Corp.
Date: 2014/11/7Time: PM 11:51:36
161_Flat_802.11a CH40_6M_side 2 surface to phantom 10mm_MIMO
DUT: AC785S-500;Type: WWAN Mobile Hotspot Portable Device;Serial: 014197000002053
Communication System: UID 0, IEEE 802.11a (0);Frequency: 5200 MHz;Duty Cycle: 1:1
Medium parameters used: f = 5200 MHz; σ = 5.52 S/m; ε_r = 47.76; ρ = 1000 kg/m^3
Phantom section: Flat Section
Measurement Standard: DASY5 (IEEE/IEC/ANSI C63.19-2011)
DASY Configuration:

- Area Scan setting - Find Secondary Maximum Within:2.0dB and with a peak SAR value greater than 0.5 W/Kg
- Probe: EX3DV4 - SN3977;ConvF(4.5, 4.5, 4.5); Calibrated: 2014/2/17;
- Sensor-Surface: 2mm (Mechanical Surface Detection)
- Electronics: DAE4 Sn779;Calibrated: 2014/2/25
- Phantom: ELI v5.0;Type: QDOVA002AA;Serial: TP:1133
- Measurement SW: DASY52, Version 52.8 (7);SEMCAD X Version 14.6.10 (7164)

Flat/Area Scan (101x161x1):
Interpolated grid: dx=1.000 mm, dy=1.000 mm
Maximum value of SAR (interpolated) = 0.0348 W/kg

Flat/Zoom Scan (8x8x12)/Cube 0:
Measurement grid: dx=4mm, dy=4mm, dz=2mm
Reference Value = 0.241 V/m; Power Drift = 0.12 dB
Peak SAR (extrapolated) = 0.240 W/kg
SAR(1 g) = 0.018 W/kg; SAR(10 g) = 0.00421 W/kg
Maximum value of SAR (measured) = 0.0279 W/kg

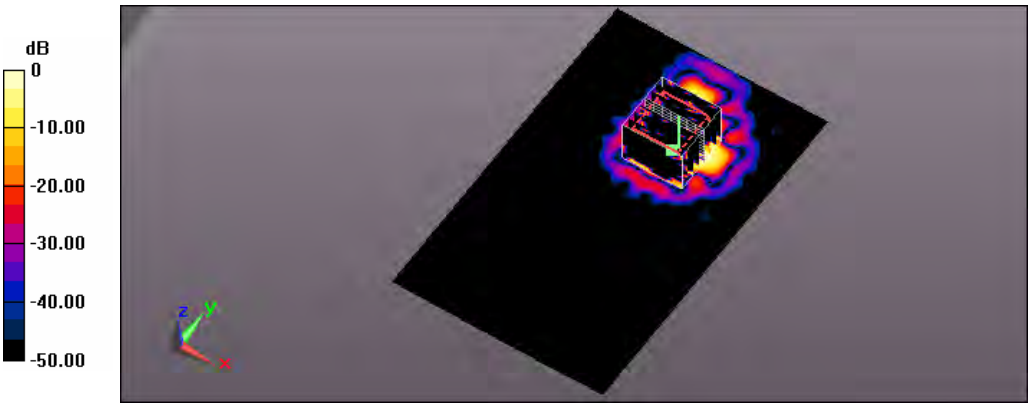

0 dB = 0.0279 W/kg = -15.54 dBW/kg

Test Laboratory: A Test Lab Techno Corp.
Date: 2014/11/7Time: PM 10:42:58
162_Flat_802.11a CH40_6M_side 3 surface to phantom 10mm_MIMO
DUT: AC785S-500;Type: WWAN Mobile Hotspot Portable Device;Serial: 014197000002053
Communication System: UID 0, IEEE 802.11a (0);Frequency: 5200 MHz;Duty Cycle: 1:1
Medium parameters used: f = 5200 MHz; σ = 5.52 S/m; ε_r = 47.76; ρ = 1000 kg/m^3
Phantom section: Flat Section
Measurement Standard: DASY5 (IEEE/IEC/ANSI C63.19-2011)
DASY Configuration:

- Area Scan setting - Find Secondary Maximum Within:2.0dB and with a peak SAR value greater than 0.5 W/Kg
- Probe: EX3DV4 - SN3977;ConvF(4.5, 4.5, 4.5); Calibrated: 2014/2/17;
- Sensor-Surface: 2mm (Mechanical Surface Detection)
- Electronics: DAE4 Sn779;Calibrated: 2014/2/25
- Phantom: ELI v5.0;Type: QDOVA002AA;Serial: TP:1133
- Measurement SW: DASY52, Version 52.8 (7);SEMCAD X Version 14.6.10 (7164)

Flat/Area Scan (91x161x1):
Interpolated grid: dx=1.000 mm, dy=1.000 mm
Maximum value of SAR (interpolated) = 0.143 W/kg

Flat/Zoom Scan (8x8x12)/Cube 0:
Measurement grid: dx=4mm, dy=4mm, dz=2mm
Reference Value = 4.731 V/m; Power Drift = 0.10 dB
Peak SAR (extrapolated) = 0.283 W/kg
SAR(1 g) = 0.067 W/kg; SAR(10 g) = 0.023 W/kg
Maximum value of SAR (measured) = 0.139 W/kg

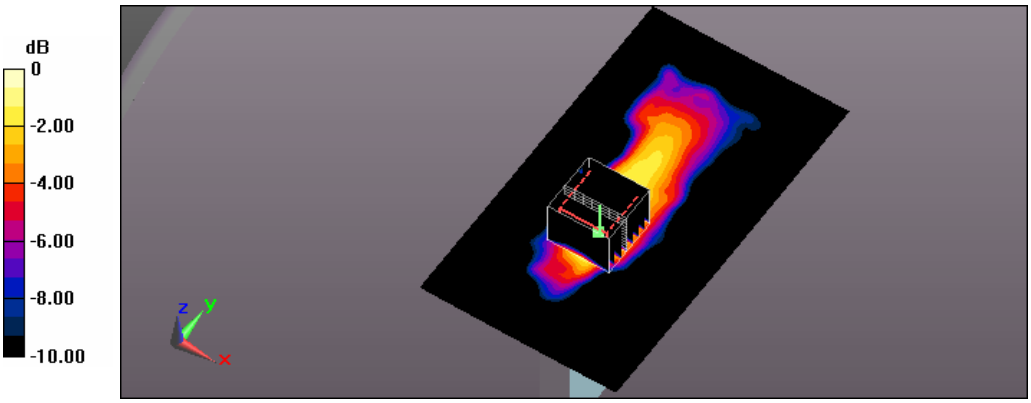

0 dB = 0.139 W/kg = -8.57 dBW/kg

Test Laboratory: A Test Lab Techno Corp.
Date: 2014/11/8Time: AM 02:15:19
199_Flat_802.11a CH40_6M_side 6 surface to phantom 10mm_MIMO
DUT: AC785S-500;Type: WWAN Mobile Hotspot Portable Device;Serial: 014197000002053
Communication System: UID 0, IEEE 802.11a (0);Frequency: 5200 MHz;Duty Cycle: 1:1
Medium parameters used: f = 5200 MHz; σ = 5.52 S/m; ε_r = 47.76; ρ = 1000 kg/m^3
Phantom section: Flat Section
Measurement Standard: DASY5 (IEEE/IEC/ANSI C63.19-2011)
DASY Configuration:

- Area Scan setting - Find Secondary Maximum Within:2.0dB and with a peak SAR value greater than 0.5 W/Kg
- Probe: EX3DV4 - SN3977;ConvF(4.5, 4.5, 4.5); Calibrated: 2014/2/17;
- Sensor-Surface: 2mm (Mechanical Surface Detection)
- Electronics: DAE4 Sn779;Calibrated: 2014/2/25
- Phantom: ELI v5.0;Type: QDOVA002AA;Serial: TP:1133
- Measurement SW: DASY52, Version 52.8 (7);SEMCAD X Version 14.6.10 (7164)

Flat/Area Scan (91x161x1):
Interpolated grid: dx=1.000 mm, dy=1.000 mm
Maximum value of SAR (interpolated) = 0.0547 W/kg

Flat/Zoom Scan (8x8x12)/Cube 0:
Measurement grid: dx=4mm, dy=4mm, dz=2mm
Reference Value = 2.584 V/m; Power Drift = -0.13 dB
Peak SAR (extrapolated) = 0.189 W/kg
SAR(1 g) = 0.021 W/kg; SAR(10 g) = 0.00891 W/kg
Maximum value of SAR (measured) = 0.0530 W/kg

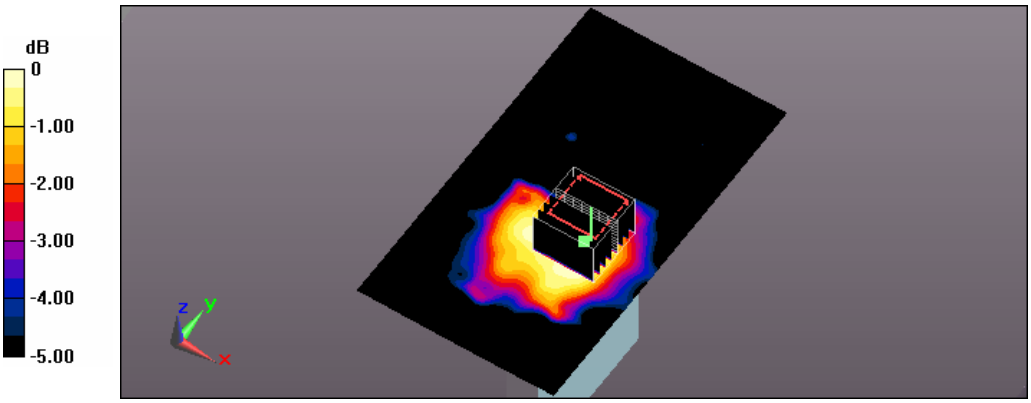

0 dB = 0.0530 W/kg = -12.76 dBW/kg

Test Laboratory: A Test Lab Techno Corp.
Date: 2014/11/8Time: AM 01:13:52
163_Flat_802.11a CH44_6M_side 1 surface to phantom 10mm_MIMO
DUT: AC785S-500;Type: WWAN Mobile Hotspot Portable Device;Serial: 014197000002053
Communication System: UID 0, IEEE 802.11a (0);Frequency: 5220 MHz;Duty Cycle: 1:1
Medium parameters used (interpolated): f = 5220 MHz; σ = 5.532 S/m; ε_r = 47.708; ρ = 1000 kg/m^3
Phantom section: Flat Section
Measurement Standard: DASY5 (IEEE/IEC/ANSI C63.19-2011)
DASY Configuration:

- Area Scan setting - Find Secondary Maximum Within:2.0dB and with a peak SAR value greater than 0.5 W/Kg
- Probe: EX3DV4 - SN3977;ConvF(4.5, 4.5, 4.5); Calibrated: 2014/2/17;
- Sensor-Surface: 2mm (Mechanical Surface Detection)
- Electronics: DAE4 Sn779;Calibrated: 2014/2/25
- Phantom: ELI v5.0;Type: QDOVA002AA;Serial: TP:1133
- Measurement SW: DASY52, Version 52.8 (7);SEMCAD X Version 14.6.10 (7164)

Flat/Area Scan (101x161x1):
Interpolated grid: dx=1.000 mm, dy=1.000 mm
Maximum value of SAR (interpolated) = 0.132 W/kg

Flat/Zoom Scan (8x8x12)/Cube 0:
Measurement grid: dx=4mm, dy=4mm, dz=2mm
Reference Value = 1.981 V/m; Power Drift = 0.10 dB
Peak SAR (extrapolated) = 0.275 W/kg
SAR(1 g) = 0.059 W/kg; SAR(10 g) = 0.022 W/kg
Maximum value of SAR (measured) = 0.121 W/kg

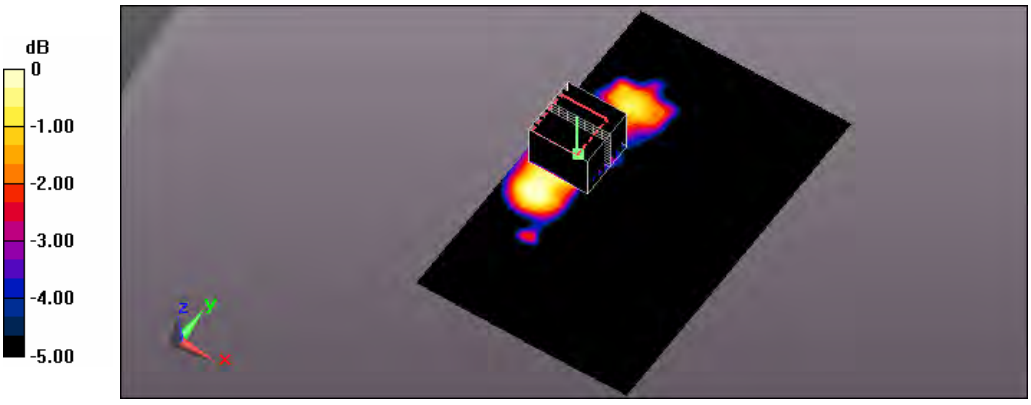

0 dB = 0.121 W/kg = -9.17 dBW/kg

Test Laboratory: A Test Lab Techno Corp.
Date: 2014/11/10Time: PM 03:38:16
164_Flat_802.11a CH44_6M_side 2 surface to phantom 10mm_MIMO
DUT: AC785S-500;Type: WWAN Mobile Hotspot Portable Device;Serial: 014197000002053
Communication System: UID 0, IEEE 802.11a (0);Frequency: 5220 MHz;Duty Cycle: 1:1
Medium parameters used (interpolated): f = 5220 MHz; σ = 5.532 S/m; ε_r = 47.708; ρ = 1000 kg/m^3
Phantom section: Flat Section
Measurement Standard: DASY5 (IEEE/IEC/ANSI C63.19-2011)
DASY Configuration:

- Area Scan setting - Find Secondary Maximum Within:2.0dB and with a peak SAR value greater than 0.5 W/Kg
- Probe: EX3DV4 - SN3977;ConvF(4.5, 4.5, 4.5); Calibrated: 2014/2/17;
- Sensor-Surface: 2mm (Mechanical Surface Detection)
- Electronics: DAE4 Sn779;Calibrated: 2014/2/25
- Phantom: ELI v5.0;Type: QDOVA002AA;Serial: TP:1133
- Measurement SW: DASY52, Version 52.8 (7);SEMCAD X Version 14.6.10 (7164)

Flat/Area Scan (101x161x1):
Interpolated grid: dx=1.000 mm, dy=1.000 mm
Maximum value of SAR (interpolated) = 0.0518 W/kg

Flat/Zoom Scan (8x8x12)/Cube 0:
Measurement grid: dx=4mm, dy=4mm, dz=2mm
Reference Value = 0.156 V/m; Power Drift = -0.09 dB
Peak SAR (extrapolated) = 0.235 W/kg
SAR(1 g) = 0.016 W/kg; SAR(10 g) = 0.00368 W/kg
Maximum value of SAR (measured) = 0.0299 W/kg

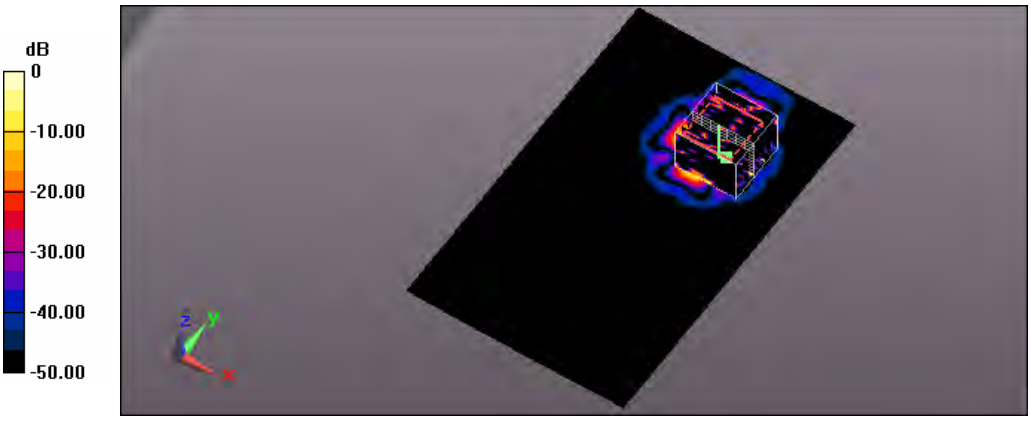

0 dB = 0.0299 W/kg = -15.24 dBW/kg

Test Laboratory: A Test Lab Techno Corp.
Date: 2014/11/10Time: PM 02:36:51
165_Flat_802.11a CH44_6M_side 3 surface to phantom 10mm_MIMO
DUT: AC785S-500;Type: WWAN Mobile Hotspot Portable Device;Serial: 014197000002053
Communication System: UID 0, IEEE 802.11a (0);Frequency: 5220 MHz;Duty Cycle: 1:1
Medium parameters used (interpolated): f = 5220 MHz; σ = 5.532 S/m; ε_r = 47.708; ρ = 1000 kg/m^3
Phantom section: Flat Section
Measurement Standard: DASY5 (IEEE/IEC/ANSI C63.19-2011)
DASY Configuration:

- Area Scan setting - Find Secondary Maximum Within:2.0dB and with a peak SAR value greater than 0.5 W/Kg
- Probe: EX3DV4 - SN3977;ConvF(4.5, 4.5, 4.5); Calibrated: 2014/2/17;
- Sensor-Surface: 2mm (Mechanical Surface Detection)
- Electronics: DAE4 Sn779;Calibrated: 2014/2/25
- Phantom: ELI v5.0;Type: QDOVA002AA;Serial: TP:1133
- Measurement SW: DASY52, Version 52.8 (7);SEMCAD X Version 14.6.10 (7164)

Flat/Area Scan (91x161x1):
Interpolated grid: dx=1.000 mm, dy=1.000 mm
Maximum value of SAR (interpolated) = 0.122 W/kg

Flat/Zoom Scan (8x8x12)/Cube 0:
Measurement grid: dx=4mm, dy=4mm, dz=2mm
Reference Value = 4.387 V/m; Power Drift = 0.04 dB
Peak SAR (extrapolated) = 0.264 W/kg
SAR(1 g) = 0.060 W/kg; SAR(10 g) = 0.021 W/kg
Maximum value of SAR (measured) = 0.148 W/kg

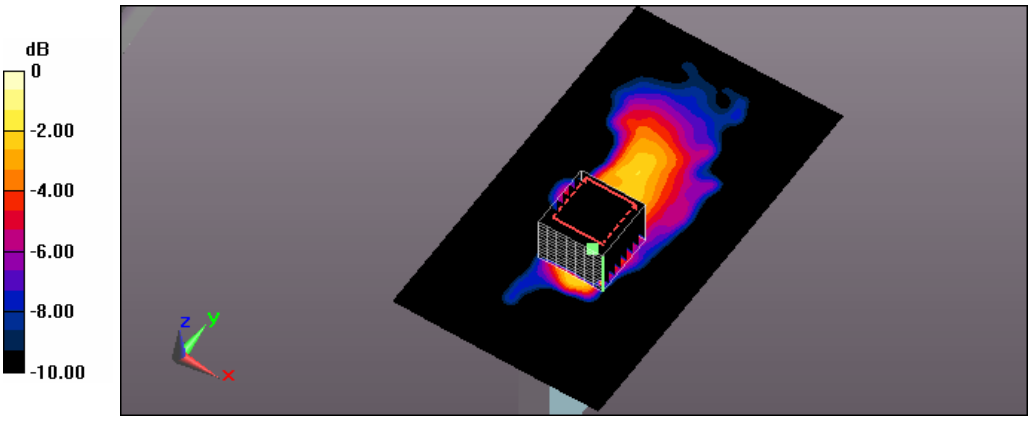

0 dB = 0.148 W/kg = -8.30 dBW/kg

Test Laboratory: A Test Lab Techno Corp.
Date: 2014/11/8Time: AM 03:13:35
200_Flat_802.11a CH44_6M_side 6 surface to phantom 10mm_MIMO
DUT: AC785S-500;Type: WWAN Mobile Hotspot Portable Device;Serial: 014197000002053
Communication System: UID 0, IEEE 802.11a (0);Frequency: 5220 MHz;Duty Cycle: 1:1
Medium parameters used (interpolated): f = 5220 MHz; σ = 5.532 S/m; ε_r = 47.708; ρ = 1000 kg/m^3
Phantom section: Flat Section
Measurement Standard: DASY5 (IEEE/IEC/ANSI C63.19-2011)
DASY Configuration:

- Area Scan setting - Find Secondary Maximum Within:2.0dB and with a peak SAR value greater than 0.5 W/Kg
- Probe: EX3DV4 - SN3977;ConvF(4.5, 4.5, 4.5); Calibrated: 2014/2/17;
- Sensor-Surface: 2mm (Mechanical Surface Detection)
- Electronics: DAE4 Sn779;Calibrated: 2014/2/25
- Phantom: ELI v5.0;Type: QDOVA002AA;Serial: TP:1133
- Measurement SW: DASY52, Version 52.8 (7);SEMCAD X Version 14.6.10 (7164)

Flat/Area Scan (91x161x1):
Interpolated grid: dx=1.000 mm, dy=1.000 mm
Maximum value of SAR (interpolated) = 0.0528 W/kg

Flat/Zoom Scan (8x8x12)/Cube 0:
Measurement grid: dx=4mm, dy=4mm, dz=2mm
Reference Value = 2.446 V/m; Power Drift = -0.12 dB
Peak SAR (extrapolated) = 0.224 W/kg
SAR(1 g) = 0.022 W/kg; SAR(10 g) = 0.00924 W/kg
Maximum value of SAR (measured) = 0.0552 W/kg

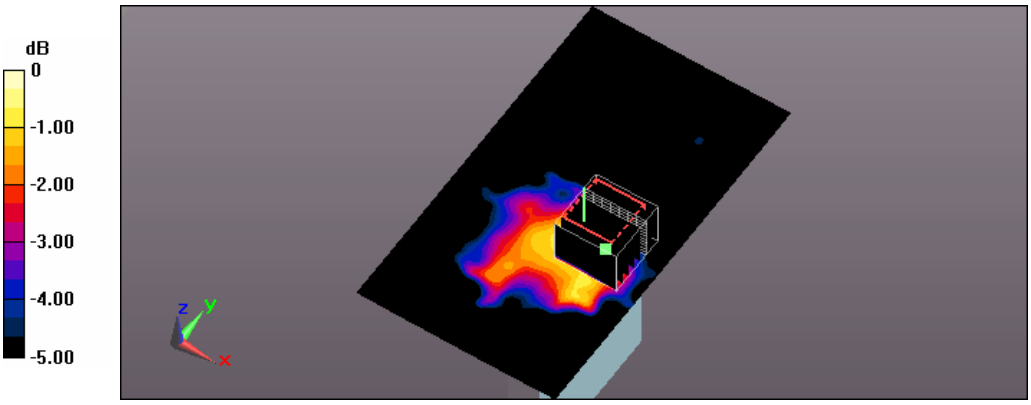

0 dB = 0.0552 W/kg = -12.58 dBW/kg

Test Laboratory: A Test Lab Techno Corp.
Date: 2014/11/10Time: PM 08:06:48
166_Flat_802.11a CH149_6M_side 1 surface to phantom 10mm_MIMO
DUT: AC785S-500;Type: WWAN Mobile Hotspot Portable Device;Serial: 014197000002053
Communication System: UID 0, IEEE 802.11a (0);Frequency: 5745 MHz;Duty Cycle: 1:1
Medium parameters used (interpolated): f = 5745 MHz; σ = 6.194 S/m; ε_r = 46.549; ρ = 1000 kg/m^3
Phantom section: Flat Section
Measurement Standard: DASY5 (IEEE/IEC/ANSI C63.19-2011)
DASY Configuration:

- Area Scan setting - Find Secondary Maximum Within:2.0dB and with a peak SAR value greater than 0.5 W/Kg
- Probe: EX3DV4 - SN3977;ConvF(4.12, 4.12, 4.12); Calibrated: 2014/2/17;
- Sensor-Surface: 2mm (Mechanical Surface Detection)
- Electronics: DAE4 Sn779;Calibrated: 2014/2/25
- Phantom: ELI v5.0;Type: QDOVA002AA;Serial: TP:1133
- Measurement SW: DASY52, Version 52.8 (7);SEMCAD X Version 14.6.10 (7164)

Flat/Area Scan (101x161x1):
Interpolated grid: dx=1.000 mm, dy=1.000 mm
Maximum value of SAR (interpolated) = 0.228 W/kg

Flat/Zoom Scan (8x8x12)/Cube 0:
Measurement grid: dx=4mm, dy=4mm, dz=2mm
Reference Value = 0.741 V/m; Power Drift = -0.00 dB
Peak SAR (extrapolated) = 0.369 W/kg
SAR(1 g) = 0.083 W/kg; SAR(10 g) = 0.026 W/kg
Maximum value of SAR (measured) = 0.188 W/kg

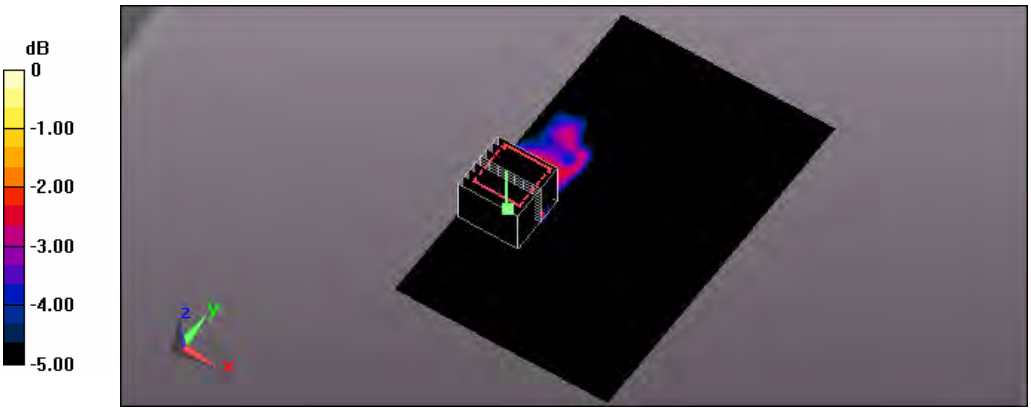

0 dB = 0.188 W/kg = -7.26 dBW/kg

Test Laboratory: A Test Lab Techno Corp.
Date: 2014/11/10Time: PM 06:01:20
167_Flat_802.11a CH149_6M_side 2 surface to phantom 10mm_MIMO
DUT: AC785S-500;Type: WWAN Mobile Hotspot Portable Device;Serial: 014197000002053
Communication System: UID 0, IEEE 802.11a (0);Frequency: 5745 MHz;Duty Cycle: 1:1
Medium parameters used (interpolated): f = 5745 MHz; σ = 6.194 S/m; ε_r = 46.549; ρ = 1000 kg/m^3
Phantom section: Flat Section
Measurement Standard: DASY5 (IEEE/IEC/ANSI C63.19-2011)
DASY Configuration:

- Area Scan setting - Find Secondary Maximum Within:2.0dB and with a peak SAR value greater than 0.5 W/Kg
- Probe: EX3DV4 - SN3977;ConvF(4.12, 4.12, 4.12); Calibrated: 2014/2/17;
- Sensor-Surface: 2mm (Mechanical Surface Detection)
- Electronics: DAE4 Sn779;Calibrated: 2014/2/25
- Phantom: ELI v5.0;Type: QDOVA002AA;Serial: TP:1133
- Measurement SW: DASY52, Version 52.8 (7);SEMCAD X Version 14.6.10 (7164)

Flat/Area Scan (101x161x1):
Interpolated grid: dx=1.000 mm, dy=1.000 mm
Maximum value of SAR (interpolated) = 0.0240 W/kg

Flat/Zoom Scan (8x8x12)/Cube 0:
Measurement grid: dx=4mm, dy=4mm, dz=2mm
Reference Value = 0 V/m; Power Drift = 0.00 dB
Peak SAR (extrapolated) = 0.214 W/kg
SAR(1 g) = 0.016 W/kg; SAR(10 g) = 0.0027 W/kg
Maximum value of SAR (measured) = 0.0249 W/kg

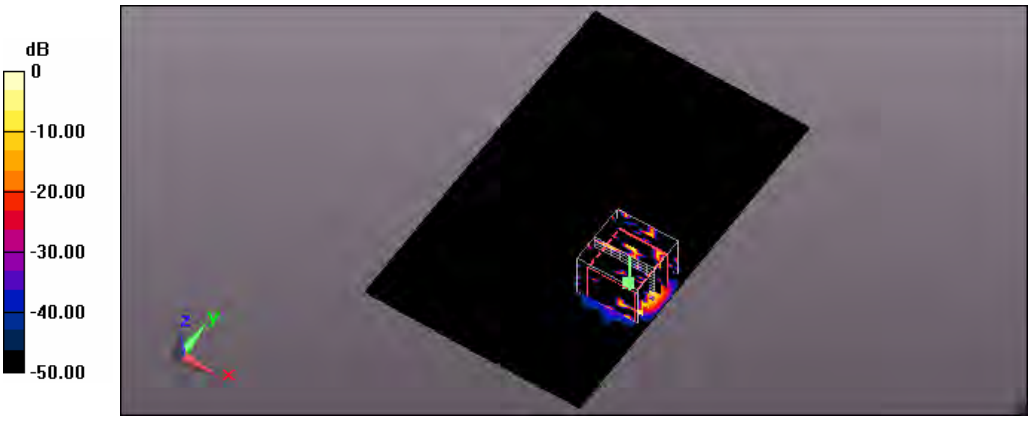

0 dB = 0.0249 W/kg = -16.04 dBW/kg

Test Laboratory: A Test Lab Techno Corp.
Date: 2014/11/10Time: PM 09:05:17
168_Flat_802.11a CH149_6M_side 3 surface to phantom 10mm_MIMO
DUT: AC785S-500;Type: WWAN Mobile Hotspot Portable Device;Serial: 014197000002053
Communication System: UID 0, IEEE 802.11a (0);Frequency: 5745 MHz;Duty Cycle: 1:1
Medium parameters used (interpolated): f = 5745 MHz; σ = 6.194 S/m; ε_r = 46.549; ρ = 1000 kg/m^3
Phantom section: Flat Section
Measurement Standard: DASY5 (IEEE/IEC/ANSI C63.19-2011)
DASY Configuration:

- Area Scan setting - Find Secondary Maximum Within:2.0dB and with a peak SAR value greater than 0.5 W/Kg
- Probe: EX3DV4 - SN3977;ConvF(4.12, 4.12, 4.12); Calibrated: 2014/2/17;
- Sensor-Surface: 2mm (Mechanical Surface Detection)
- Electronics: DAE4 Sn779;Calibrated: 2014/2/25
- Phantom: ELI v5.0;Type: QDOVA002AA;Serial: TP:1133
- Measurement SW: DASY52, Version 52.8 (7);SEMCAD X Version 14.6.10 (7164)

Flat/Area Scan (91x161x1):
Interpolated grid: dx=1.000 mm, dy=1.000 mm
Maximum value of SAR (interpolated) = 0.240 W/kg

Flat/Zoom Scan (8x8x12)/Cube 0:
Measurement grid: dx=4mm, dy=4mm, dz=2mm
Reference Value = 5.177 V/m; Power Drift = -0.10 dB
Peak SAR (extrapolated) = 0.448 W/kg
SAR(1 g) = 0.102 W/kg; SAR(10 g) = 0.032 W/kg
Maximum value of SAR (measured) = 0.224 W/kg

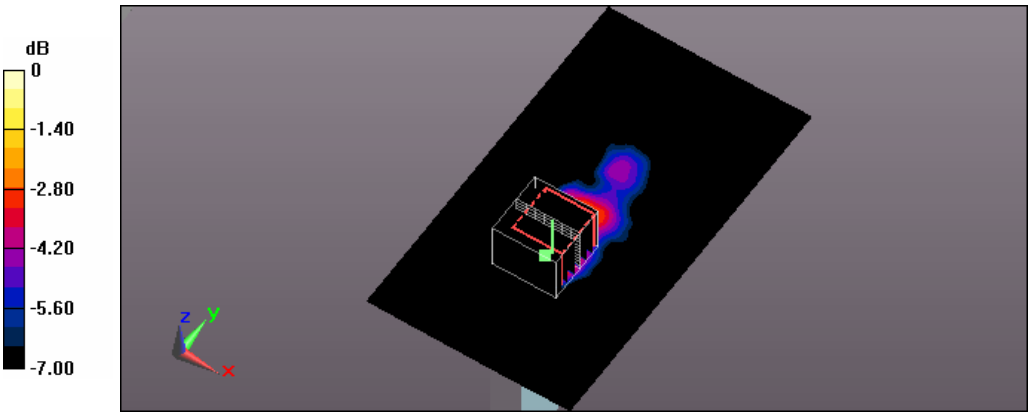

0 dB = 0.224 W/kg = -6.50 dBW/kg

Test Laboratory: A Test Lab Techno Corp.
Date: 2014/11/11Time: AM 01:26:28
201_Flat_802.11a CH149_6M_side 6 surface to phantom 10mm_MIMO
DUT: AC785S-500;Type: WWAN Mobile Hotspot Portable Device;Serial: 014197000002053
Communication System: UID 0, IEEE 802.11a (0);Frequency: 5745 MHz;Duty Cycle: 1:1
Medium parameters used (interpolated): f = 5745 MHz; σ = 6.194 S/m; ε_r = 46.549; ρ = 1000 kg/m^3
Phantom section: Flat Section
Measurement Standard: DASY5 (IEEE/IEC/ANSI C63.19-2011)
DASY Configuration:

- Area Scan setting - Find Secondary Maximum Within:2.0dB and with a peak SAR value greater than 0.5 W/Kg
- Probe: EX3DV4 - SN3977;ConvF(4.12, 4.12, 4.12); Calibrated: 2014/2/17;
- Sensor-Surface: 2mm (Mechanical Surface Detection)
- Electronics: DAE4 Sn779;Calibrated: 2014/2/25
- Phantom: ELI v5.0;Type: QDOVA002AA;Serial: TP:1133
- Measurement SW: DASY52, Version 52.8 (7);SEMCAD X Version 14.6.10 (7164)

Flat/Area Scan (91x161x1):
Interpolated grid: dx=1.000 mm, dy=1.000 mm
Maximum value of SAR (interpolated) = 0.0283 W/kg

Flat/Zoom Scan (8x8x12)/Cube 0:
Measurement grid: dx=4mm, dy=4mm, dz=2mm
Reference Value = 0.850 V/m; Power Drift = -0.17 dB
Peak SAR (extrapolated) = 0.0320 W/kg
SAR(1 g) = 0.000278 W/kg; SAR(10 g) = 1.87e-005 W/kg
Maximum value of SAR (measured) = 0.0133 W/kg

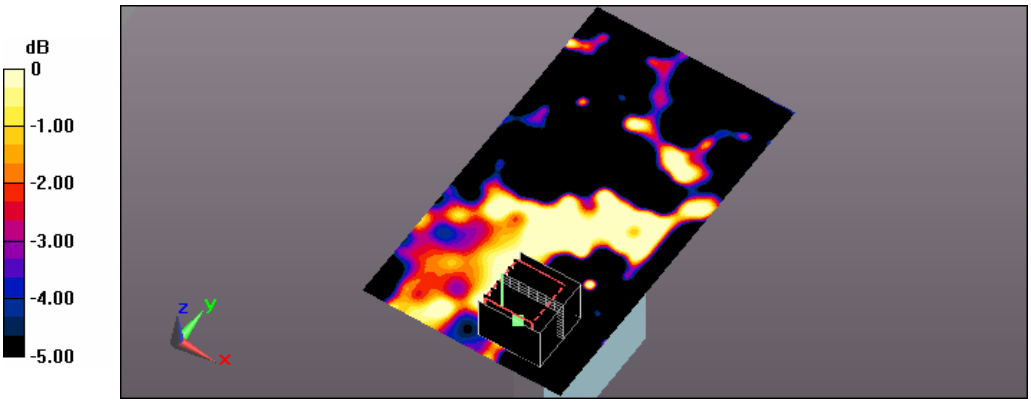

0 dB = 0.0133 W/kg = -18.76 dBW/kg

Test Laboratory: A Test Lab Techno Corp.
Date: 2014/11/11Time: AM 01:26:28
201_Flat_802.11a CH149_6M_side 6 surface to phantom 10mm_MIMO
DUT: AC785S-500;Type: WWAN Mobile Hotspot Portable Device;Serial: 014197000002053
Communication System: UID 0, IEEE 802.11a (0);Frequency: 5745 MHz;Duty Cycle: 1:1
Medium parameters used (interpolated): f = 5745 MHz; σ = 6.194 S/m; ε_r = 46.549; ρ = 1000 kg/m^3
Phantom section: Flat Section
Measurement Standard: DASY5 (IEEE/IEC/ANSI C63.19-2011)
DASY Configuration:

- Area Scan setting - Find Secondary Maximum Within:2.0dB and with a peak SAR value greater than 0.5 W/Kg
- Probe: EX3DV4 - SN3977;ConvF(4.12, 4.12, 4.12); Calibrated: 2014/2/17;
- Sensor-Surface: 2mm (Mechanical Surface Detection)
- Electronics: DAE4 Sn779;Calibrated: 2014/2/25
- Phantom: ELI v5.0;Type: QDOVA002AA;Serial: TP:1133
- Measurement SW: DASY52, Version 52.8 (7);SEMCAD X Version 14.6.10 (7164)

Flat/Area Scan (91x161x1):
Interpolated grid: dx=1.000 mm, dy=1.000 mm
Maximum value of SAR (interpolated) = 0.0283 W/kg

Flat/Zoom Scan (8x8x12)/Cube 0:
Measurement grid: dx=4mm, dy=4mm, dz=2mm
Reference Value = 0.850 V/m; Power Drift = -0.17 dB
Peak SAR (extrapolated) = 0.0320 W/kg
SAR(1 g) = 0.000278 W/kg; SAR(10 g) = 1.87e-005 W/kg
Maximum value of SAR (measured) = 0.0133 W/kg

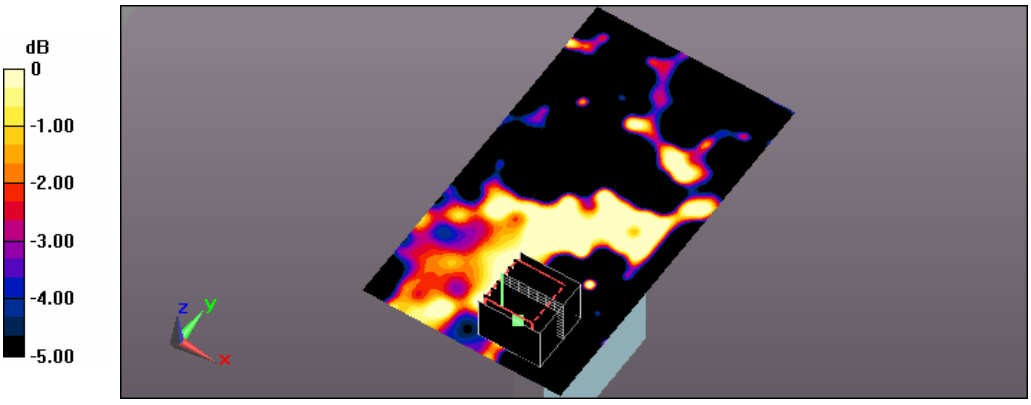

0 dB = 0.0133 W/kg = -18.76 dBW/kg

Test Laboratory: A Test Lab Techno Corp.
Date: 2014/11/11Time: PM 01:28:16
170_Flat_802.11a CH153_6M_side 2 surface to phantom 10mm_MIMO
DUT: AC785S-500;Type: WWAN Mobile Hotspot Portable Device;Serial: 014197000002053
Communication System: UID 0, IEEE 802.11a (0);Frequency: 5765 MHz;Duty Cycle: 1:1
Medium parameters used (interpolated): f = 5765 MHz; σ = 6.228 S/m; ε_r = 46.498; ρ = 1000 kg/m^3
Phantom section: Flat Section
Measurement Standard: DASY5 (IEEE/IEC/ANSI C63.19-2011)
DASY Configuration:

- Area Scan setting - Find Secondary Maximum Within:2.0dB and with a peak SAR value greater than 0.5 W/Kg
- Probe: EX3DV4 - SN3977;ConvF(4.12, 4.12, 4.12); Calibrated: 2014/2/17;
- Sensor-Surface: 2mm (Mechanical Surface Detection)
- Electronics: DAE4 Sn779;Calibrated: 2014/2/25
- Phantom: ELI v5.0;Type: QDOVA002AA;Serial: TP:1133
- Measurement SW: DASY52, Version 52.8 (7);SEMCAD X Version 14.6.10 (7164)

Flat/Area Scan (101x161x1):
Interpolated grid: dx=1.000 mm, dy=1.000 mm
Maximum value of SAR (interpolated) = 0.0348 W/kg

Flat/Zoom Scan (8x8x12)/Cube 0:
Measurement grid: dx=4mm, dy=4mm, dz=2mm
Reference Value = 0 V/m; Power Drift = 0.00 dB
Peak SAR (extrapolated) = 0.230 W/kg
SAR(1 g) = 0.016 W/kg; SAR(10 g) = 0.00232 W/kg
Maximum value of SAR (measured) = 0.0270 W/kg

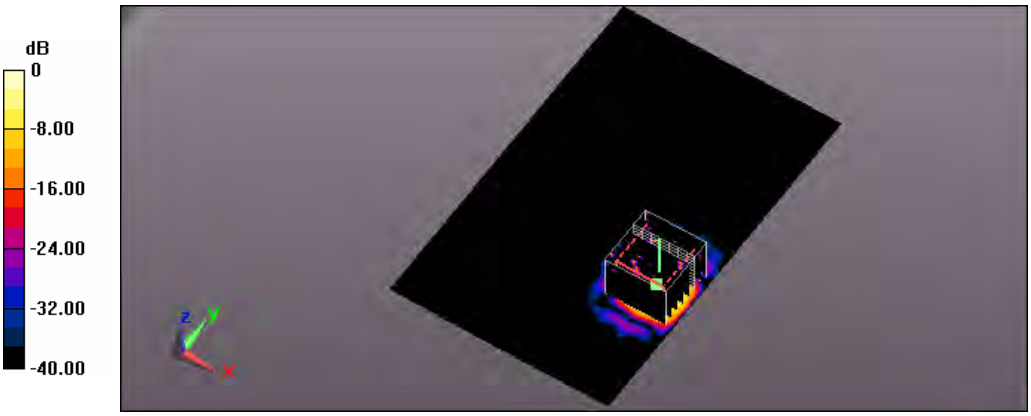

0 dB = 0.0270 W/kg = -15.69 dBW/kg

Test Laboratory: A Test Lab Techno Corp.
Date: 2014/11/10Time: PM 11:32:15
171_Flat_802.11a CH153_6M_side 3 surface to phantom 10mm_MIMO
DUT: AC785S-500;Type: WWAN Mobile Hotspot Portable Device;Serial: 014197000002053
Communication System: UID 0, IEEE 802.11a (0);Frequency: 5765 MHz;Duty Cycle: 1:1
Medium parameters used (interpolated): f = 5765 MHz; σ = 6.228 S/m; ε_r = 46.498; ρ = 1000 kg/m^3
Phantom section: Flat Section
Measurement Standard: DASY5 (IEEE/IEC/ANSI C63.19-2011)
DASY Configuration:

- Area Scan setting - Find Secondary Maximum Within:2.0dB and with a peak SAR value greater than 0.5 W/Kg
- Probe: EX3DV4 - SN3977;ConvF(4.12, 4.12, 4.12); Calibrated: 2014/2/17;
- Sensor-Surface: 2mm (Mechanical Surface Detection)
- Electronics: DAE4 Sn779;Calibrated: 2014/2/25
- Phantom: ELI v5.0;Type: QDOVA002AA;Serial: TP:1133
- Measurement SW: DASY52, Version 52.8 (7);SEMCAD X Version 14.6.10 (7164)

Flat/Area Scan (91x161x1):
Interpolated grid: dx=1.000 mm, dy=1.000 mm
Maximum value of SAR (interpolated) = 0.177 W/kg

Flat/Zoom Scan (8x8x12)/Cube 0:
Measurement grid: dx=4mm, dy=4mm, dz=2mm
Reference Value = 5.423 V/m; Power Drift = -0.17 dB
Peak SAR (extrapolated) = 0.386 W/kg
SAR(1 g) = 0.081 W/kg; SAR(10 g) = 0.026 W/kg
Maximum value of SAR (measured) = 0.175 W/kg

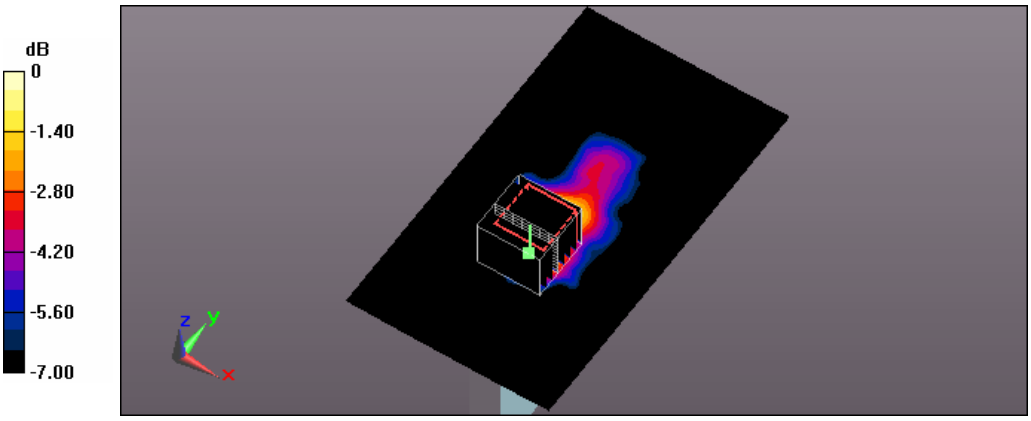

0 dB = 0.175 W/kg = -7.57 dBW/kg

Test Laboratory: A Test Lab Techno Corp.
Date: 2014/11/11Time: AM 02:31:27
202_Flat_802.11a CH153_6M_side 6 surface to phantom 10mm_MIMO
DUT: AC785S-500;Type: WWAN Mobile Hotspot Portable Device;Serial: 014197000002053
Communication System: UID 0, IEEE 802.11a (0);Frequency: 5765 MHz;Duty Cycle: 1:1
Medium parameters used (interpolated): f = 5765 MHz; σ = 6.228 S/m; ε_r = 46.498; ρ = 1000 kg/m^3
Phantom section: Flat Section
Measurement Standard: DASY5 (IEEE/IEC/ANSI C63.19-2011)
DASY Configuration:

- Area Scan setting - Find Secondary Maximum Within:2.0dB and with a peak SAR value greater than 0.5 W/Kg
- Probe: EX3DV4 - SN3977;ConvF(4.12, 4.12, 4.12); Calibrated: 2014/2/17;
- Sensor-Surface: 2mm (Mechanical Surface Detection)
- Electronics: DAE4 Sn779;Calibrated: 2014/2/25
- Phantom: ELI v5.0;Type: QDOVA002AA;Serial: TP:1133
- Measurement SW: DASY52, Version 52.8 (7);SEMCAD X Version 14.6.10 (7164)

Flat/Area Scan (91x161x1):
Interpolated grid: dx=1.000 mm, dy=1.000 mm
Maximum value of SAR (interpolated) = 0.0547 W/kg

Flat/Zoom Scan (8x8x12)/Cube 0:
Measurement grid: dx=4mm, dy=4mm, dz=2mm
Reference Value = 1.124 V/m; Power Drift = -0.12 dB
Peak SAR (extrapolated) = 0.0400 W/kg
SAR(1 g) = 0.00144 W/kg; SAR(10 g) = 0.000182 W/kg
Maximum value of SAR (measured) = 0.0143 W/kg

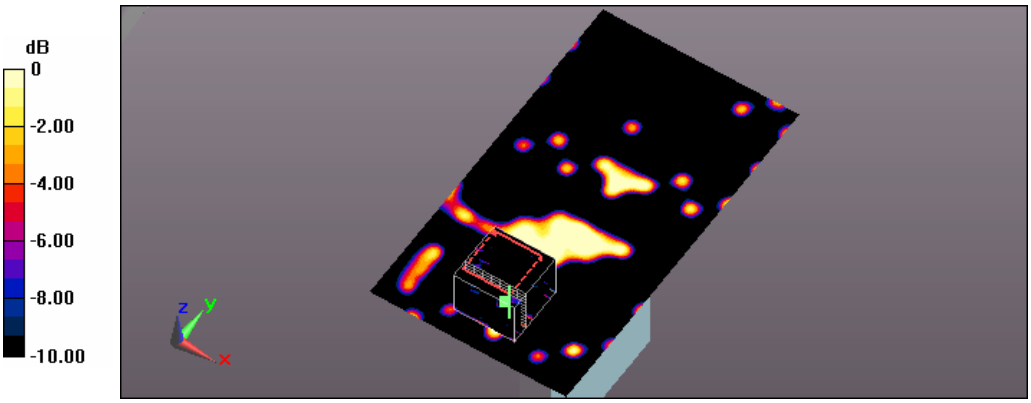

0 dB = 0.0143 W/kg = -18.45 dBW/kg