TEST REPORT

Equipment Under Test	:	Wireless PC Card 32-bit CardBus
Model No.	:	WG511V2H1
FCC ID	:	PY3WG511V2H1
Applicant	:	Netgear, Inc.
Address of Applicant	:	4500 Great America Parkway Santa Clara, CA 95054, U.S.A.
Date of Receipt	:	2004.09.06
Date of Test(s)	:	2004.09.08-2004.09.09
Date of Issue	:	2004.09.10

Standards:

FCC OET Bulletin 65 supplement C,
ANSI / IEEE C95.1 , C95.3
IEEE 1528 2002

In the configuration tested, the EUT complied with the standards specified above.

Remarks:

This report details the results of the testing carried out on one sample, the results contained in this test report do not relate to other samples of the same product. The manufacturer should ensure that all products in series production are in conformity with the product sample detailed in this report.

This report may only be reproduced and distributed in full. If the product in this report is used in any configuration other than that detailed in the report, the manufacturer must ensure the new system complies with all relevant standards. Any mention of SGS Taiwan E&E Services or testing done by SGS Taiwan E&E Services in connection with distribution or use of the product described in this report must be approved by SGS Taiwan E&E Services in writing.

Tested by	:	**Dikin Yang**	**Date**	:	**2004.09.10**
Approved by	:	**Robert Chang**	**Date**	:	**2004.09.10**

Contents

1. General Information
1.1 Testing Laboratory 3
1.2 Details of Applicant 3
1.3 Description of EUT(s) 3
1.4 Test Environment 4
1.5 Operation description 4
1.6 Evaluation procedures 5
1.7 The SAR Measurement System 6
1.8 System Components 7
1.9 SAR System Verification 8
1.10 Tissue Simulant Fluid for the Frequency Band 2.4 to 2.5 GHz 9
1.11 Test Standards and Limits 10
2. Instruments List 12
3. Summary of Results 13
4. Measurements 14
802.11b
Configuration 1
4.1.1 Vertical position, lowest channel 14
4.1.2 Vertical position, middle channel 15
4.1.3 Vertical position, highest channel 16
Configuration 2
4.1.4 Horizontal position, lowest channel 17
4.1.5 Horizontal position, middle channel 18
4.1.6 Horizontal position, highest channel 19
802.11g
Configuration 1
4.2.1 Vertical position, lowest channel 20
4.2.2 Vertical position, middle channel 21
4.2.3 Vertical position, highest channel 22
Configuration 2
4.2.4 Horizontal position, lowest channel 23
4.2.5 Horizontal position, middle channel 24
4.2.6 Horizontal position, highest channel 25
4.3 System Performance Validation 26
APPENDIX
1. Photographs of Test Setup 27
2. Photographs of EUT 31
3. Probe Calibration certificate 33
4. Uncertainty Analysis 37
5. Phantom description 38
6. System Validation from Original equipment supplier 39

1. General Information

1.1 Testing Laboratory

SGS Taiwan Ltd.
1F, No. 134, Wukung Road, Wuku industrial zone
Taipei county , Taiwan , R.O.C.
Telephone : +886-2-2299-3279
Fax : +886-2-2298-0488
Internet : http://www.sgs.com.tw

1.2 Details of Applicant

Applicant : Netgear, Inc.
Address : 4500 Great America Parkway Santa Clara, CA 95054, U.S.A.

1.3 Description of EUT(s)

Equipment Type	Wireless PC Card 32-bit CardBus	
Test Procedure	FCC OET Bulletin 65, Supplement C	
TX Frequency range	2412-2462 MHz	
FCC ID	PY3WG511V2H1	
Model No.	WG511V2H1	
Number Of Channel	11	
Modulation	Direct Sequence Spread Spectrum (DSSS)	
Transfer Rate	802.11b	802.11g
	11 Mbps	54 Mbps
Max. SAR Measured (1 g)	802.11b	802.11g
	0.639 W/kg	0.293 W/kg
Antenna Gain	2.03 dBi	
Antenna Type	Printed Antenna	
Power Supply	3.3 V from notebook	

Host Laptop PC(s) Tested	IBM ThinkPad T30 (S/N: 99AMZM5)

1.4 Test Environment

Ambient temperature : 21.9° C

Tissue Simulating Liquid : 21.3° C

Relative Humidity : 62 %

1.5 Operation Configuration

Channel Frequency Under Test And Its Conducted Output Power (Peak)	802.11b Mode	802.11g Mode
	15.06 dBm (2412MHz) 16.07 dBm (2437MHz) 15.02 dBm (2462MHz)	15.19 dBm (2412MHz) 14.99 dBm (2437MHz) 14.03 dBm (2462MHz)
Antenna Configuration	Printed Antenna	
Antenna Position	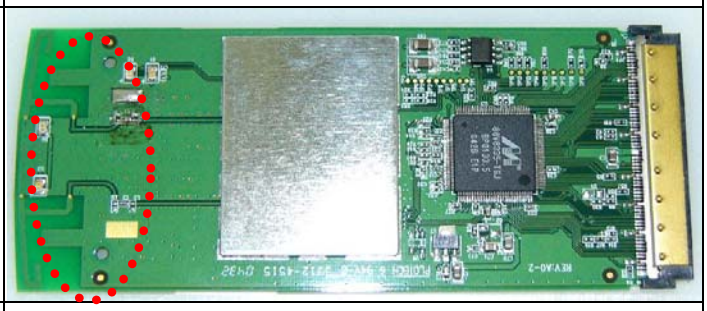	
EUT Power Source	3.3 V from notebook	

The EUT is PCMCIA Card, which is installed inside a Notebook. Since the Notebook is placed on the top of the leg, when it operates, it is to be defined as a portable device. SAR measurement is mandatory. In order to measure SAR value, we used continuous transmission mode. The test set up mode was prepared by manufacturer. Value of Crest Factor = 1 was used for SAR testing according to the nature of the EUT. The test configuration tested at the low, middle and high frequency channels (2412MHz,2437MHz and 2462MHz).By using the program subordinated in the computer, and change into the written channel, and then set in highest power. Finally, we will test it by dividing into 2 ways.

Configuration 1: Vertical of the PC at 90° and at a distance of 0.0 cm from the base of the phantom, and the antenna tip upward.(Fig.3 & Fig.4 & Fig.5)

Configuration 2: Bottom of the PC is paralleled and at a distance of 0.0 cm from the base of the phantom, but 1.4 cm Spacing between EUT & Planar Phantom.(Fig.6 & Fig.7 & Fig.8)

1.6 EVALUATION PROCEDURES

The evaluation was performed with the following procedure:

(1). Measurement of the SAR value at a fixed location above the ear point or central position of flat phantom was used as a reference value for assessing the power drop.

(2). The SAR distribution at the exposed side of head or body position was measured at a distance of each device from the inner surface of the shell. The area covered the entire dimension of the head or EUT and the horizontal grid spacing was 15 mm x 15 mm. Based on these data, the area of the maximum absorption was determined by splint interpolation.

(3). Around this point, a volume of 30 mm x 30 mm x 30 mm was assessed by measuring 7 x7 x 7 points. On the basis of this data set, the spatial peak SAR value was evaluated under the following procedure:

1. The data at the surface were extrapolated, since the center of the dipoles is 2.7 mm away from the tip of the probe and the distance between the surface and the lowest measuring point is 1.2 mm. The extrapolation was based on a least square algorithm [1]. A polynomial of the fourth order was calculated through the points in z-axes. This polynomial was then used to evaluate the points between the surface and the probe tip.
2. The maximum interpolated value was searched with a straightforward algorithm. Around this maximum the SAR values averaged over the spatial volumes (1 g or 10 g) were computed by the 3D-Spline interpolation algorithm. The 3D-Spline is composed of three one-dimensional splints with the "Not a knot"-condition (in x, y and z-directions) [1], [2]. The volume was integrated with the trapezoidal-algorithm. One thousand points (10 x 10 x 10) were interpolated to calculate the average.
3. All neighboring volumes were evaluated until no neighboring volume with a higher average value was found.
4. Re-measurement of the SAR value at the same location as in Step 1. If the value changed by more than 5%, the evaluation was repeated.

1.7 The SAR Measurement System

A photograph of the SAR measurement System is given in Fig. a. This SAR Measurement System uses a Computer-controlled 3-D stepper motor system (Speag Dasy 4 professional system). A Model ET3DV6 1759 E-field probe is used to determine the internal electric fields. The SAR can be obtained from the equation SAR= $\sigma (|Ei|^2)/ \rho$ where σ and ρ are the conductivity and mass density of the tissue-simulant.

The DASY4 system for performing compliance tests consists of the following items:

- A standard high precision 6-axis robot (Staubli RX family) with controller, teach pendant and software. An arm extension for accommodating the data acquisition electronics (DAE).
- A dosimetric probe, i.e., an isotropic E-field probe optimized and calibrated for usage in tissue simulating liquid. The probe is equipped with an optical surface detector system.

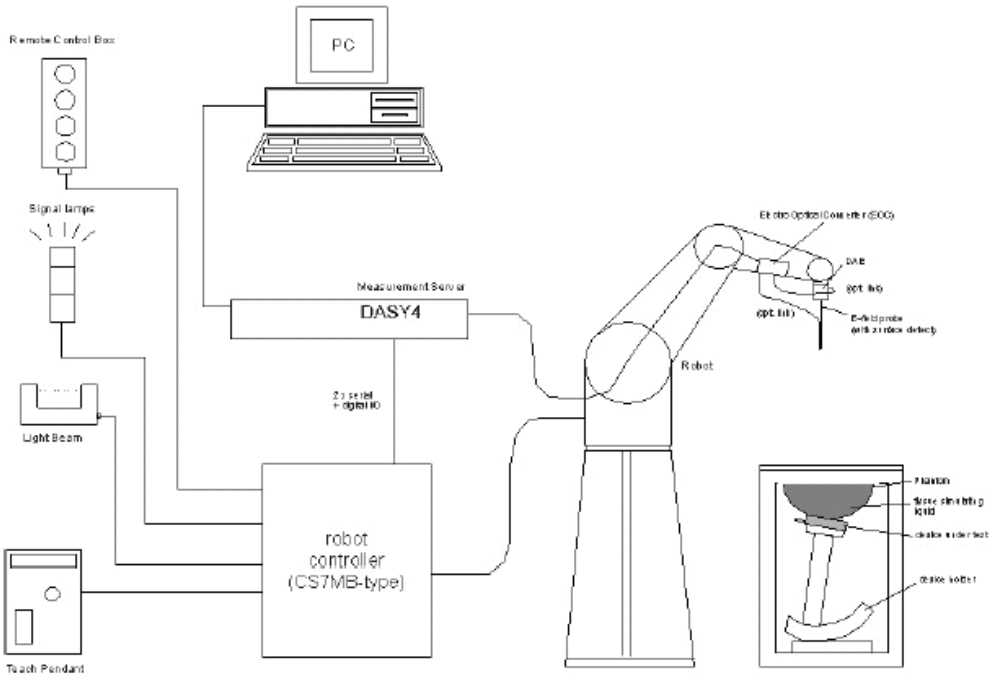

Fig. a The microwave circuit arrangement used for SAR system verification

- A data acquisition electronics (DAE) which performs the signal amplification, signal multiplexing, AD-conversion, offset measurements, mechanical surface detection, collision detection, etc. The unit is battery powered with standard or rechargeable batteries. The signal is optically transmitted to the EOC.
- The Electro-optical converter (EOC) performs the conversion between optical and electrical of the signals for the digital communication to the DAE and for the analog signal from the optical surface detection. The EOC is connected to the measurement server.
- The function of the measurement server is to perform the time critical tasks such as signal filtering, control of the robot operation and fast movement interrupts.
- A probe alignment unit which improves the (absolute) accuracy of the probe positioning.
- A computer operating Windows 2000 or Windows XP.

- DASY4 software.
- Remote control with teach pendant and additional circuitry for robot safety such as warning lamps, etc.
- The SAM twin phantom enabling testing left-hand and right-hand usage.
- The device holder for handheld mobile phones.
- Tissue simulating liquid mixed according to the given recipes.
- Validation dipole kits allowing to validate the proper functioning of the system.

1.8 System Components

ET3DV6 E-Field Probe

Construction:	Symmetrical design with triangular core Built-in shielding against static charges PEEK enclosure material (resistant to organic solvents, e.g. glycol)
Calibration:	In air from 10 MHz to 2.5 GHz In brain simulating tissue at frequencies of 2450 MHz (accuracy ± 8%)
Frequency:	10 MHz to >6 GHz; Linearity: ±0.2 dB (30 MHz to 3 GHz)

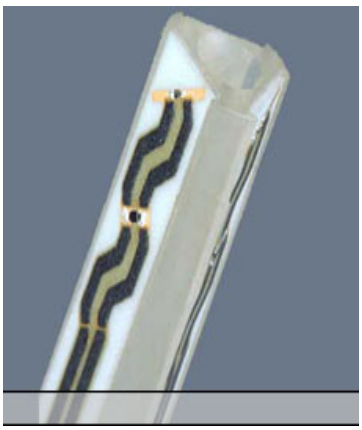

ET3DV6 E-Field Probe

Directivity:	±0.2 dB in brain tissue (rotation around probe axis) ±0.4 dB in brain tissue (rotation normal to probe axis)
Dynamic Rnge:	5 μW/g to >100 mW/g; Linearity: ±0.2 dB
Srfce. Detect:	±0.2 mm repeatability in air and clear liquids over diffuse reflecting surfaces
Dimensions:	Overall length: 330 mm Tip length: 16 mm Body diameter: 12 mm Tip diameter: 6.8 mm Distance from probe tip to dipole centers: 2.7 mm
Application:	General dosimetry up to 3 GHz Compliance tests of mobile phone

SAM PHANTOM V4.0C

Construction:	The shell corresponds to the specifications of the Specific Anthropomorphic Mannequin (SAM) phantom defined in IEEE

1528-2002, CENELEC 50361 and IEC 62209. It enables the dosimetric evaluation of left and right hand phone usage as well as body mounted usage at the flat phantom region. A cover prevents evaporation of the liquid. Reference markings on the phantom allow the complete setup of all predefined phantom positions and measurement grids by manually teaching three points with the robot.

Shell Thickness:	2 ± 0.2 mm
Filling Volume:	Approx. 25 liters
Dimensions:	Height: 810 mm;
	Length: 1000 mm;
	Width: 500 mm

PHANTOM v4.0C

DEVICE HOLDER

Construction

In combination with the Twin SAM Phantom V4.0/V4.0C or Twin SAM, the Mounting Device (made from POM) enables the rotation of the mounted transmitter in spherical coordinates, whereby the rotation point is the ear opening. The devices can be easily and accurately positioned according to IEC, IEEE, CENELEC, FCC or other specifications. The device holder can be locked at different phantom locations (left head, right head, flat phantom).

Device Holder

1.9 SAR System Verification

The microwave circuit arrangement for system verification is sketched in Fig. b. The daily system accuracy verification occurs within the flat section of the SAM phantom. A SAR measurement was performed to see if the measured SAR was within +/- 10% from the target SAR values. These tests were done at 2450MHz. The tests were conducted on the same days as the measurement of the DUT. The obtained results from the system accuracy verification are displayed in the table 1 (SAR values are normalized to 1W forward power delivered to the dipole). During the tests, the ambient temperature of the

laboratory was in the range 21.9 °C, the relative humidity was in the range 62% and the liquid depth above the ear reference points was above 15 cm in all the cases. It is seen that the system is operating within its specification, as the results are within acceptable tolerance of the reference values.

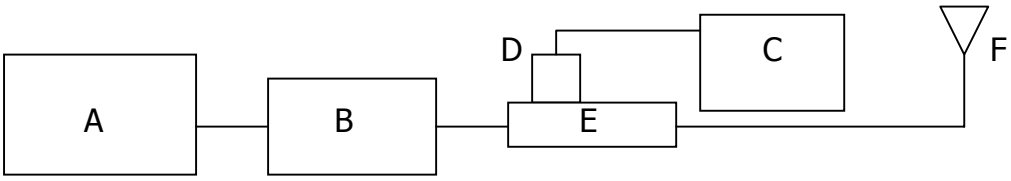

Fig. b The microwave circuit arrangement used for SAR system verification

A. Agilent Model 8648D Signal Generator
B. Mini circuits Model ZHL-42 Amplifier
C. Agilent Model E4416A Power Meter
D. Agilent Model 8482H Power Sensor
E. Agilent Model 777D Dual directional coupling
F. Reference dipole antenna

Photograph of the 2450MHz System Check

Validation Kit	Frequency	Target SAR 1g (250mW)	Target SAR 10g (250mW)	Measured SAR 1g (250mW)	Measured SAR 10g (250mW)	Measured date
DT3DV6 S/N :1760	2450 MHz	14.2 m W/g	6.62 m W/g	13.8 m W/g	6.31 m W/g	2004-09-08

Table 1. Results system validation

1.10 Tissue Simulant Fluid for the Frequency Band 2.4 to 2.5 GHz

The dielectric properties for this body-simulant fluid were measured by using the HP Model 85070D Dielectric Probe (rates frequence band 200 MHz to 20 GHz) in conjuncation with HP 8753D Network Analyzer(300 KHz-3000 MHz) by using a procedure detailed in Section V.

F (Mhz)	Tissue type	Limits/ Measured	Dielectric Parameters		
			Permittivity	Conductivity	Simulated Tissue Temp(° C)
2450	Body	Measured,2004.09.08	53.2	1.989	22
		Measured,2004.09.09	52.3	1.973	22

		Recommended Limits	50.1-55.3	1.85-2.05	20-24

All dielectric parameters of tissue simulates were measured within 24 hours of SAR measurements. The depth of the tissue simulant in the ear reference point of the phantom was 15cm±5mm during all tests. (Fig .2)
The composition of the brain tissue simulating liquid for 2450 MHz is:

Ingredient	2450Mhz (Head)	2450Mhz (Body)
DGMBE	550.0 g	301.7 ml
Water	450.0 g	698.3 ml
Total amount	1 L (1.0kg)	1 L (1.0kg)

1.11 Test Standards and Limits

According to FCC 47CFR §2.1093(d) The limits to be used for evaluation are based generally on criteria published by the American National Standards Institute (ANSI) for localized specific absorption rate ("SAR") in Section 4.2 of "IEEE Standard for Safety Levels with Respect to Human Exposure to Radio Frequency Electromagnetic Fields, 3 kHz to 300 GHz," ANSI/IEEE C95.1–1992, Copyright 1992 by the Institute of Electrical and Electronics Engineers, Inc., New York, New York 10017. These criteria for SAR evaluation are similar to those recommended by the National Council on Radiation Protection and Measurements (NCRP) in "Biological Effects and Exposure Criteria for Radiofrequency Electromagnetic Fields," NCRP Report No. 86, Section 17.4.5. Copyright NCRP, 1986, Bethesda, Maryland 20814. SAR is a measure of the rate of energy absorption due to exposure to an RF transmitting source. SAR values have been related to threshold levels for potential biological hazards. The criteria to be used are specified in paragraphs (d)(1) and (d)(2) of this section and shall apply for portable devices transmitting in the frequency range from 100 kHz to 6 GHz. Portable devices that transmit at frequencies above 6 GHz are to be evaluated in terms of the MPE limits specified in § 1.1310 of this chapter. Measurements and calculations to demonstrate compliance with MPE field strength or power density limits for devices operating above 6 GHz should be made at a minimum distance of 5 cm from the radiating source.
(1) Limits for Occupational/Controlled exposure: 0.4 W/kg as averaged over the whole-body and spatial peak SAR not exceeding 8 W/kg as averaged over any 1 gram of tissue (defined as a tissue volume in the shape of a cube). Exceptions are the hands, wrists, feet and ankles where the spatial peak SAR shall not exceed 20 W/kg, as averaged over an 10 grams of tissue (defined as a tissue volume in the shape of a cube).

Occupational/Controlled limits apply when persons are exposed as a consequence of their employment provided these persons are fully aware of and exercise control over their exposure. Awareness of exposure can be accomplished by use of warning labels or by specific training or education through appropriate means, such as an RF safety program in a work environment.

(2) Limits for General Population/Uncontrolled exposure: 0.08 W/kg as averaged over the whole-body and spatial peak SAR not exceeding 1.6 W/kg as averaged over any 1 gram of tissue (defined as a tissue volume in the shape of a cube). Exceptions are the hands, wrists, feet and ankles where the spatial peak SAR shall not exceed 4 W/kg, as averaged over any 10 grams of tissue (defined as a tissue volume in the shape of a cube). General Population/Uncontrolled limits apply when the general public may be exposed, or when persons that are exposed as a consequence of their employment may not be fully aware of the potential for exposure or do not exercise control over their exposure. Warning labels placed on consumer devices such as cellular telephones will not be sufficient reason to allow these devices to be evaluated subject to limits for occupational/controlled exposure in paragraph (d)(1) of this section.(Table .4)

Human Exposure	**Uncontrolled Environment General Population**	**Controlled Environment Occupational**
Spatial Peak SAR (Brain)	1.60 m W/g	8.00 m W/g
Spatial Average SAR (Whole Body)	0.08 m W/g	0.40 m W/g
Spatial Peak SAR (Hands/Feet/Ankle/Wrist)	4.00 m W/g	20.00 m W/g

Table .4 RF exposure limits

Notes:

1. Uncontrolled environments are defined as locations where there is potential exposure of individuals who have no knowledge or control of their potential exposure.
2. Controlled environments are defined as locations where there is potential exposure of individuals who have knowledge of their potential exposure and can exercise control over their exposure.

2. Instruments List

Manufacturer	Device	Type	Serial number	Date of last calibration
Schmid & Partner Engineering AG	Dosimetric E-Field Probe	ET3DV6	1760	Feb.17.2004
Schmid & Partner Engineering AG	2450 MHz System Validation Dipole	D2450V2	727	Mar.23.2004
Schmid & Partner Engineering AG	Data acquisition Electronics	DAE3	547	Feb.10.2004
Schmid & Partner Engineering AG	Software	DASY 4 V4.1c Build 47	---	Calibration isn't necessary
Schmid & Partner Engineering AG	Phantom	SAM	---	Calibration isn't necessary
Agilent	Network Analyzer	8753D	3410A05547	Jun.03.2004
Agilent	Dielectric Probe Kit	85070D	US01440168	Calibration isn't necessary
Agilent	Dual-directional coupler	777D 778D	50114 50313	Jul.27.2004 Jul.27.2004
Agilent	RF Signal Generator	8648D	3847M00432	Feb.09.2004
Agilent	Power Sensor	8482H	MY41091011	Nov.05.2003

3.Summary of Results

802.11b Mode

SAR MEASUREMENT

Crest factor : 1 (Duty cycle: 100%)
Laptop PC : IBM ThinkPad T30 , S/N: 99AMZM5 Depth of Liquid : 15.0 cm

EUT Configuration 1

EUT Set-up conditions		Frequency		Conducted Power [dBm] (Peak)	Liquid Temp[˚C]	SAR (W/kg)	Limit (W/kg)
Sep. [cm]	Antenna	Channel	MHz				
1.5	Printed	1	2412	15.06 dbm	21.3	0.639	1.6
		6	2437	16.07 dbm	21.3	0.612	
		11	2462	15.02 dbm	21.3	0.622	

EUT Configuration 2

EUT Set-up conditions		Frequency		Conducted Power [dBm] (Peak)	Liquid Temp[˚C]	SAR (W/kg)	Limit (W/kg)
Sep. [cm]	Antenna	Channel	MHz				
0.0	Printed	1	2412	15.06 dbm	21.2	0.503	1.6
		6	2437	16.07 dbm	21.3	0.495	
		11	2462	15.02 dbm	21.3	0.518	

802.11g Mode

EUT Configuration 1

EUT Set-up conditions		Frequency		Conducted Power [dBm] (Peak)	Liquid Temp[˚C]	SAR (W/kg)	Limit (W/kg)
Sep. [cm]	Antenna	Channel	MHz				
1.5	Printed	1	2412	15.19 dbm	21.3	0.293	1.6
		6	2437	14.99 dbm	21.2	0.287	
		11	2462	14.03 dbm	21.3	0.293	

EUT Configuration 2

EUT Set-up conditions		Frequency		Conducted Power [dBm] (Peak)	Liquid Temp[˚C]	SAR (W/kg)	Limit (W/kg)
Sep. [cm]	Antenna	Channel	MHz				
0.0	Printed	1	2412	15.19 dbm	21.3	0.231	1.6
		6	2437	14.99 dbm	21.3	0.239	
		11	2462	14.03 dbm	21.2	0.241	

Measured Mixture Type	Body	Relative Humidity	62%
Ambient Temperature	21.9 ˚C	Fluid Temperature	21.3˚C

4.Measurements

802.11b
Vertical position, lowest channel

Date/Time: 09/08/04 11:28:29

DUT: Wireless PC Card 32-bit CardBus ; Type: WG511V2H1;
Program: 802.11b Wireless PCMCIA Card

Communication System: Wireless LAN; Frequency: 2412 MHz;Duty Cycle: 1:1
Medium: M2450 (σ = 1.92042 mho/m, ε_r = 52.28, ρ = 1000 kg/m^3)
Phantom section: Flat Section

DASY4 Configuration:

- Probe: ET3DV6 - SN1760; ConvF(4.18, 4.18, 4.18); Calibrated: 2004/2/17
- Sensor-Surface: 4mm (Mechanical And Optical Surface Detection)
- Electronics: DAE3 Sn547; Calibrated: 2004/2/10
- Phantom: SAM 12; Type: SAM 4.0; Serial: TP:1150
- Measurement SW: DASY4, V4.1 Build 47; Postprocessing SW: SEMCAD, V1.6 Build 115

Vertical/Area Scan (61x61x1): Measurement grid: dx=15mm, dy=15mm
Reference Value = 20 V/m
Power Drift = -0.04 dB
Maximum value of SAR = 0.673 mW/g
Vertical/Zoom Scan (7x7x7)/Cube 0: Measurement grid: dx=5mm, dy=5mm, dz=5mm
Peak SAR (extrapolated) = 1.29 W/kg
SAR(1 g) = 0.639 mW/g; SAR(10 g) = 0.334 mW/g
Reference Value = 20 V/m
Power Drift = -0.04 dB
Maximum value of SAR = 0.677 mW/g

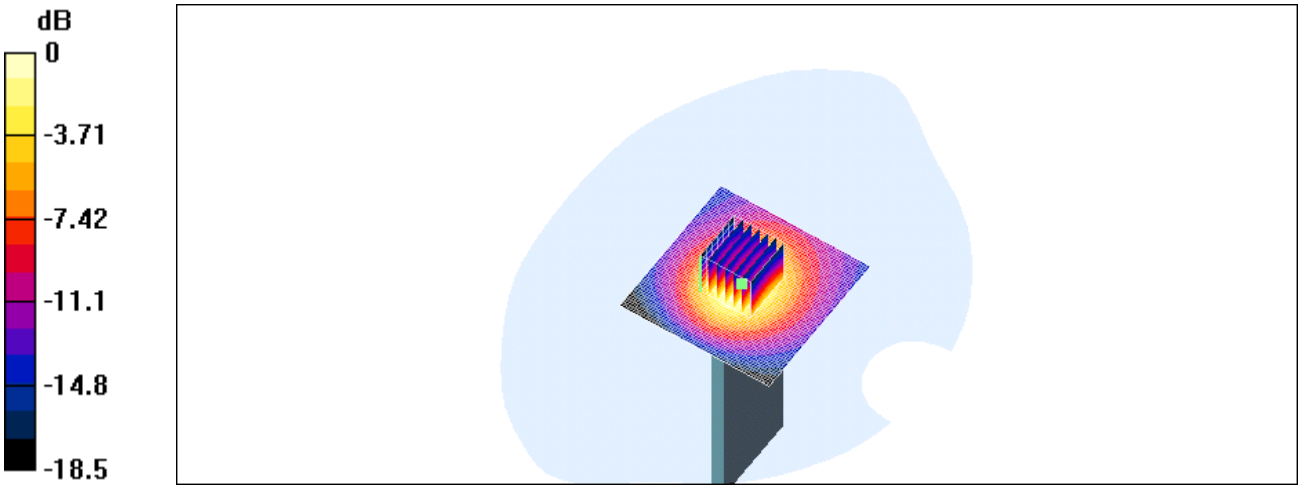

0 dB = 0.677mW/g

802.11b
Vertical position, middle channel

Date/Time: 09/08/04 12:32:51

DUT: Wireless PC Card 32-bit CardBus ; Type: WG511V2H1;
Program: 802.11b Wireless PCMCIA Card

Communication System: Wireless LAN; Frequency: 2462 MHz;Duty Cycle: 1:1
Medium: M2450 (σ = 2.00339 mho/m, ε_r = 52.213, ρ = 1000 kg/m^3)
Phantom section: Flat Section

DASY4 Configuration:

- Probe: ET3DV6 - SN1760; ConvF(4.18, 4.18, 4.18); Calibrated: 2004/2/17
- Sensor-Surface: 4mm (Mechanical And Optical Surface Detection)
- Electronics: DAE3 Sn547; Calibrated: 2004/2/10
- Phantom: SAM 12; Type: SAM 4.0; Serial: TP:1150
- Measurement SW: DASY4, V4.1 Build 47; Postprocessing SW: SEMCAD, V1.6 Build 115

Vertical/Area Scan (61x61x1): Measurement grid: dx=15mm, dy=15mm
Reference Value = 18.9 V/m
Power Drift = -0.04 dB
Maximum value of SAR = 0.644 mW/g

Vertical/Zoom Scan (7x7x7)/Cube 0: Measurement grid: dx=5mm, dy=5mm, dz=5mm
Peak SAR (extrapolated) = 1.27 W/kg
SAR(1 g) = 0.612 mW/g; SAR(10 g) = 0.316 mW/g
Reference Value = 18.9 V/m
Power Drift = -0.04 dB
Maximum value of SAR = 0.644 mW/g

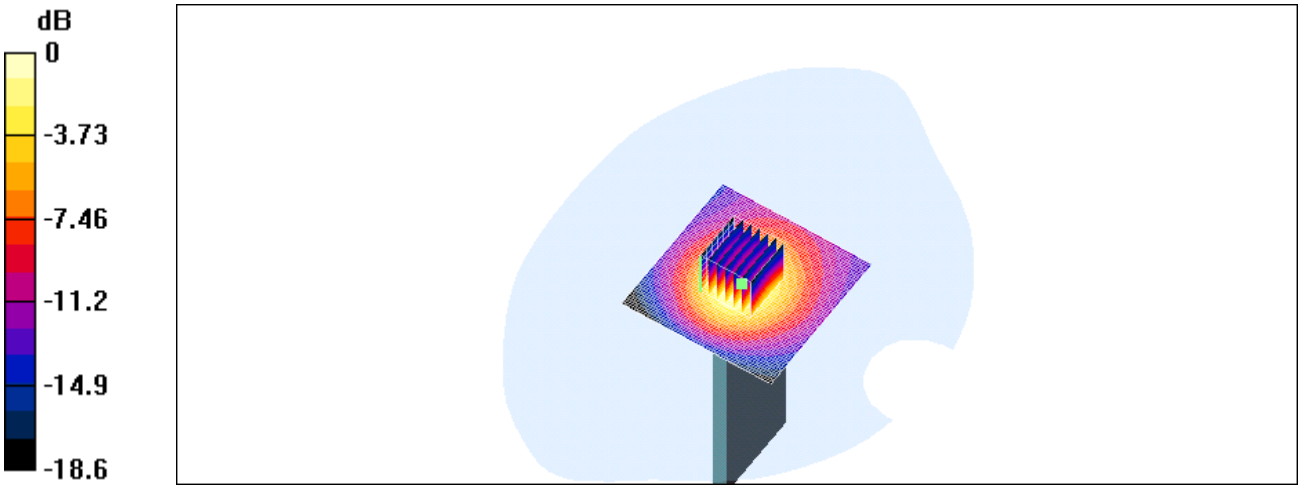

0 dB = 0.644mW/g

802.11b
Vertical position, highest channel

Date/Time: 09/08/04 12:33:10

DUT: Wireless PC Card 32-bit CardBus ; Type: WG511V2H1;
Program: 802.11b Wireless PCMCIA Card

Communication System: Wireless LAN; Frequency: 2462 MHz;Duty Cycle: 1:1
Medium: M2450 (σ = 2.00339 mho/m, ε_r = 52.213, ρ = 1000 kg/m^3)
Phantom section: Flat Section

DASY4 Configuration:

- Probe: ET3DV6 - SN1760; ConvF(4.18, 4.18, 4.18); Calibrated: 2004/2/17
- Sensor-Surface: 4mm (Mechanical And Optical Surface Detection)
- Electronics: DAE3 Sn547; Calibrated: 2004/2/10
- Phantom: SAM 12; Type: SAM 4.0; Serial: TP:1150
- Measurement SW: DASY4, V4.1 Build 47; Postprocessing SW: SEMCAD, V1.6 Build 115

Vertical/Area Scan (61x61x1): Measurement grid: dx=15mm, dy=15mm
Reference Value = 19.2 V/m
Power Drift = -0.02 dB
Maximum value of SAR = 0.644 mW/g

Vertical/Zoom Scan (7x7x7)/Cube 0: Measurement grid: dx=5mm, dy=5mm, dz=5mm
Peak SAR (extrapolated) = 1.28 W/kg
SAR(1 g) = 0.622 mW/g; SAR(10 g) = 0.316 mW/g
Reference Value = 19.2 V/m
Power Drift = -0.02 dB
Maximum value of SAR = 0.644 mW/g

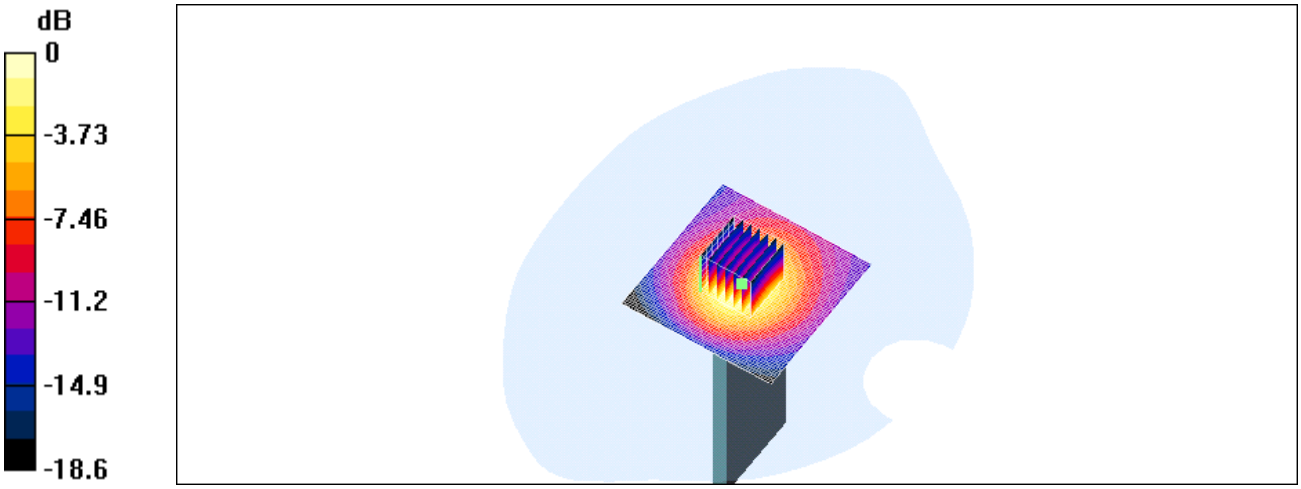

0 dB = 0.644mW/g

802.11b
Horizontal position, lowest channel

Date/Time: 09/09/04 11:06:08

DUT: Wireless PC Card 32-bit CardBus ; Type: WG511V2H1;
Program: 802.11b Wireless PCMCIA Card

Communication System: Wireless LAN; Frequency: 2412 MHz;Duty Cycle: 1:1
Medium: M2450 (σ = 1.92042 mho/m, ε_r = 52.28, ρ = 1000 kg/m^3)
Phantom section: Flat Section

DASY4 Configuration:

- Probe: ET3DV6 - SN1760; ConvF(4.18, 4.18, 4.18); Calibrated: 2004/2/17
- Sensor-Surface: 4mm (Mechanical And Optical Surface Detection)
- Electronics: DAE3 Sn547; Calibrated: 2004/2/10
- Phantom: SAM 12; Type: SAM 4.0; Serial: TP:1150
- Measurement SW: DASY4, V4.1 Build 47; Postprocessing SW: SEMCAD, V1.6 Build 115

Horizontal/Area Scan (61x81x1): Measurement grid: dx=15mm, dy=15mm
Reference Value = 16.3 V/m
Power Drift = -0.3 dB
Maximum value of SAR = 0.527 mW/g

Horizontal/Zoom Scan (7x7x7)/Cube 0: Measurement grid: dx=5mm, dy=5mm, dz=5mm
Peak SAR (extrapolated) = 1.16 W/kg
SAR(1 g) = 0.503 mW/g; SAR(10 g) = 0.251 mW/g
Reference Value = 16.3 V/m
Power Drift = -0.3 dB
Maximum value of SAR = 0.524 mW/g

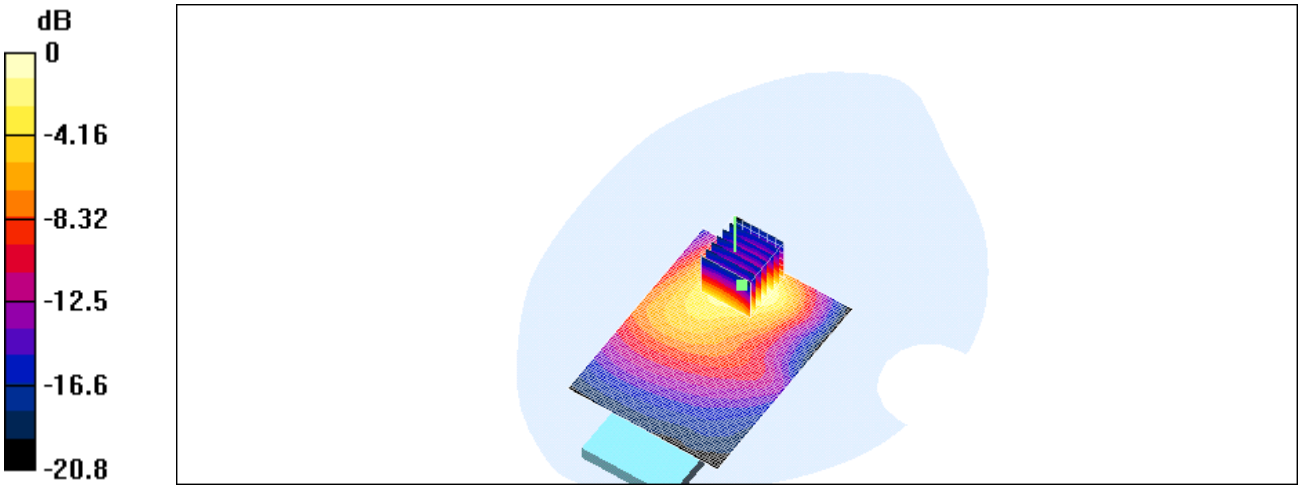

0 dB = 0.524mW/g

802.11b
Horizontal position, middle channel

Date/Time: 09/09/04 10:39:28

DUT: Wireless PC Card 32-bit CardBus ; Type: WG511V2H1;
Program: 802.11b Wireless PCMCIA Card

Communication System: Wireless LAN; Frequency: 2437 MHz;Duty Cycle: 1:1
Medium: M2450 (σ = 1.95134 mho/m, ε_r = 52.4153, ρ = 1000 kg/m^3)
Phantom section: Flat Section

DASY4 Configuration:

- Probe: ET3DV6 - SN1760; ConvF(4.18, 4.18, 4.18); Calibrated: 2004/2/17
- Sensor-Surface: 4mm (Mechanical And Optical Surface Detection)
- Electronics: DAE3 Sn547; Calibrated: 2004/2/10
- Phantom: SAM 12; Type: SAM 4.0; Serial: TP:1150
- Measurement SW: DASY4, V4.1 Build 47; Postprocessing SW: SEMCAD, V1.6 Build 115

Horizontal/Area Scan (61x81x1): Measurement grid: dx=15mm, dy=15mm
Reference Value = 15.7 V/m
Power Drift = 4e-05 dB
Maximum value of SAR = 0.523 mW/g

Horizontal/Zoom Scan (7x7x7)/Cube 0: Measurement grid: dx=5mm, dy=5mm, dz=5mm
Peak SAR (extrapolated) = 1.15 W/kg
SAR(1 g) = 0.495 mW/g; SAR(10 g) = 0.243 mW/g
Reference Value = 15.7 V/m
Power Drift = 4e-05 dB
Maximum value of SAR = 0.518 mW/g

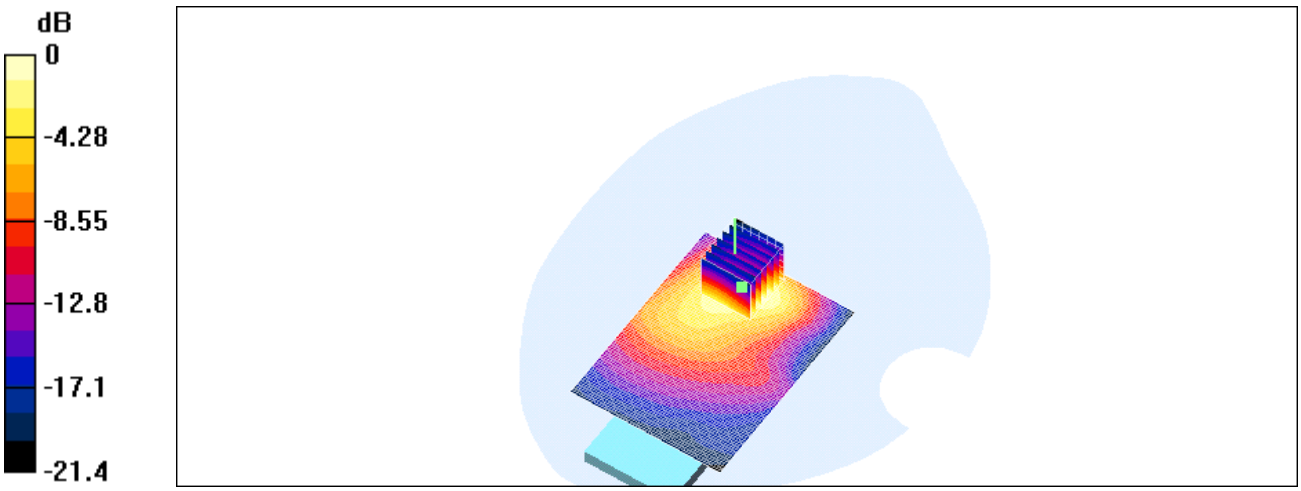

0 dB = 0.518mW/g

802.11b
Horizontal position, highest channel

Date/Time: 09/09/04 11:31:46

DUT: Wireless PC Card 32-bit CardBus ; Type: WG511V2H1;
Program: 802.11b Wireless PCMCIA Card

Communication System: Wireless LAN; Frequency: 2462 MHz;Duty Cycle: 1:1
Medium: M2450 (σ = 2.00339 mho/m, ε_r = 52.213, ρ = 1000 kg/m^3)
Phantom section: Flat Section

DASY4 Configuration:

- Probe: ET3DV6 - SN1760; ConvF(4.18, 4.18, 4.18); Calibrated: 2004/2/17
- Sensor-Surface: 4mm (Mechanical And Optical Surface Detection)
- Electronics: DAE3 Sn547; Calibrated: 2004/2/10
- Phantom: SAM 12; Type: SAM 4.0; Serial: TP:1150
- Measurement SW: DASY4, V4.1 Build 47; Postprocessing SW: SEMCAD, V1.6 Build 115

Horizontal/Area Scan (61x81x1): Measurement grid: dx=15mm, dy=15mm
Reference Value = 15.7 V/m
Power Drift = 0.1 dB
Maximum value of SAR = 0.559 mW/g

Horizontal/Zoom Scan (7x7x7)/Cube 0: Measurement grid: dx=5mm, dy=5mm, dz=5mm
Peak SAR (extrapolated) = 1.23 W/kg
SAR(1 g) = 0.518 mW/g; SAR(10 g) = 0.248 mW/g
Reference Value = 15.7 V/m
Power Drift = 0.1 dB
Maximum value of SAR = 0.551 mW/g

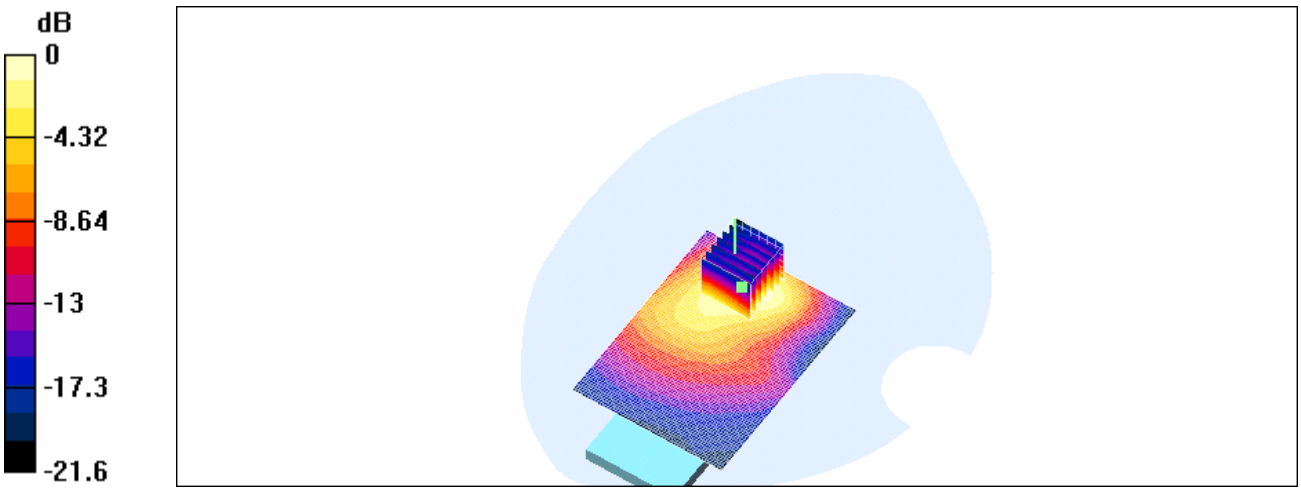

0 dB = 0.551mW/g

802.11g
Vertical position, lowest channel

Date/Time: 09/08/04 14:26:49

DUT: Wireless PC Card 32-bit CardBus ; Type: WG511V2H1;
Program: 802.11g Wireless PCMCIA Card

Communication System: Wireless LAN; Frequency: 2412 MHz;Duty Cycle: 1:1
Medium: M2450 (σ = 1.92042 mho/m, ε_r = 52.28, ρ = 1000 kg/m^3)
Phantom section: Flat Section

DASY4 Configuration:

- Probe: ET3DV6 - SN1760; ConvF(4.18, 4.18, 4.18); Calibrated: 2004/2/17
- Sensor-Surface: 4mm (Mechanical And Optical Surface Detection)
- Electronics: DAE3 Sn547; Calibrated: 2004/2/10
- Phantom: SAM 12; Type: SAM 4.0; Serial: TP:1150
- Measurement SW: DASY4, V4.1 Build 47; Postprocessing SW: SEMCAD, V1.6 Build 115

Vertical/Area Scan (61x61x1): Measurement grid: dx=15mm, dy=15mm
Reference Value = 13.3 V/m
Power Drift = 0.004 dB
Maximum value of SAR = 0.308 mW/g

Vertical/Zoom Scan (7x7x7)/Cube 0: Measurement grid: dx=5mm, dy=5mm, dz=5mm
Peak SAR (extrapolated) = 0.592 W/kg
SAR(1 g) = 0.293 mW/g; SAR(10 g) = 0.153 mW/g
Reference Value = 13.3 V/m
Power Drift = 0.004 dB
Maximum value of SAR = 0.308 mW/g

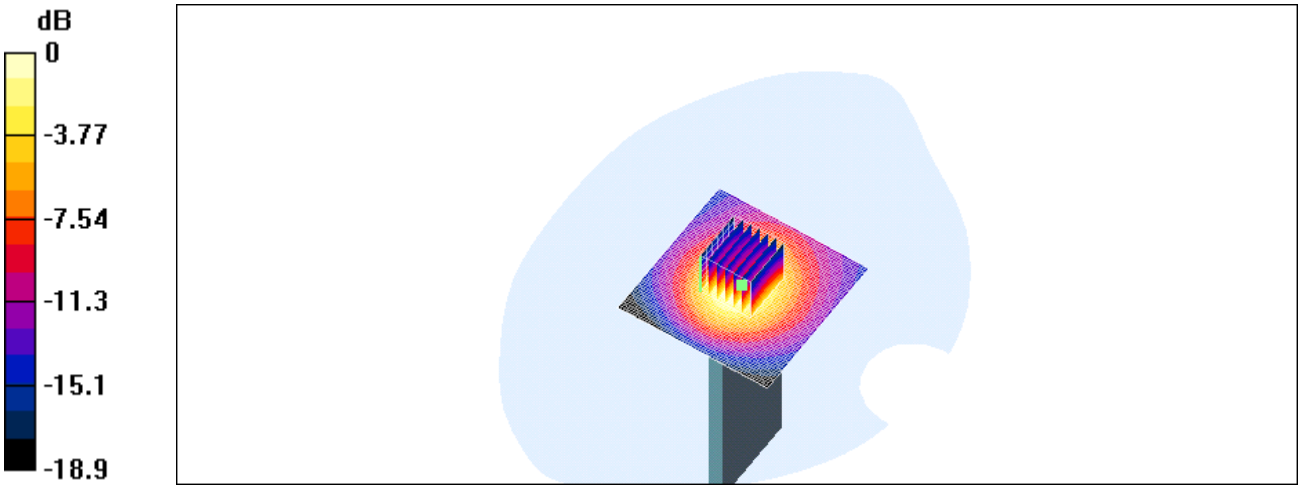

0 dB = 0.308mW/g

802.11g
Vertical position, middle channel

Date/Time: 09/08/04 13:55:49

DUT: Wireless PC Card 32-bit CardBus ; Type: WG511V2H1;
Program: 802.11g Wireless PCMCIA Card

Communication System: Wireless LAN; Frequency: 2437 MHz;Duty Cycle: 1:1
Medium: M2450 (σ = 1.95134 mho/m, ε_r = 52.4153, ρ = 1000 kg/m^3)
Phantom section: Flat Section

DASY4 Configuration:

- Probe: ET3DV6 - SN1760; ConvF(4.18, 4.18, 4.18); Calibrated: 2004/2/17
- Sensor-Surface: 4mm (Mechanical And Optical Surface Detection)
- Electronics: DAE3 Sn547; Calibrated: 2004/2/10
- Phantom: SAM 12; Type: SAM 4.0; Serial: TP:1150
- Measurement SW: DASY4, V4.1 Build 47; Postprocessing SW: SEMCAD, V1.6 Build 115

Vertical/Area Scan (61x61x1): Measurement grid: dx=15mm, dy=15mm
Reference Value = 13.1 V/m
Power Drift = -0.01 dB
Maximum value of SAR = 0.302 mW/g

Vertical/Zoom Scan (7x7x7)/Cube 0: Measurement grid: dx=5mm, dy=5mm, dz=5mm
Peak SAR (extrapolated) = 0.598 W/kg
SAR(1 g) = 0.287 mW/g; SAR(10 g) = 0.149 mW/g
Reference Value = 13.1 V/m
Power Drift = -0.01 dB
Maximum value of SAR = 0.304 mW/g

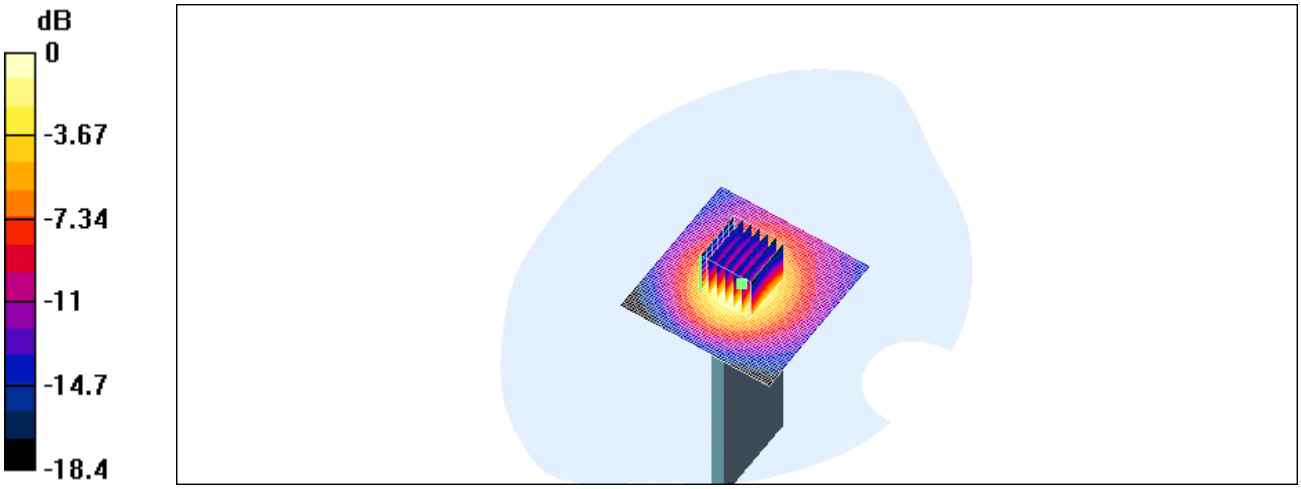

0 dB = 0.304mW/g

802.11g
Vertical position, highest channel

Date/Time: 09/08/04 14:54:23

DUT: Wireless PC Card 32-bit CardBus ; Type: WG511V2H1;
Program: 802.11g Wireless PCMCIA Card

Communication System: Wireless LAN; Frequency: 2462 MHz;Duty Cycle: 1:1
Medium: M2450 (σ = 2.00339 mho/m, ε_r = 52.213, ρ = 1000 kg/m^3)
Phantom section: Flat Section

DASY4 Configuration:

- Probe: ET3DV6 - SN1760; ConvF(4.18, 4.18, 4.18); Calibrated: 2004/2/17
- Sensor-Surface: 4mm (Mechanical And Optical Surface Detection)
- Electronics: DAE3 Sn547; Calibrated: 2004/2/10
- Phantom: SAM 12; Type: SAM 4.0; Serial: TP:1150
- Measurement SW: DASY4, V4.1 Build 47; Postprocessing SW: SEMCAD, V1.6 Build 115

Vertical/Area Scan (61x61x1): Measurement grid: dx=15mm, dy=15mm
Reference Value = 13.1 V/m
Power Drift = -0.04 dB
Maximum value of SAR = 0.308 mW/g

Vertical/Zoom Scan (7x7x7)/Cube 0: Measurement grid: dx=5mm, dy=5mm, dz=5mm
Peak SAR (extrapolated) = 0.614 W/kg
SAR(1 g) = 0.293 mW/g; SAR(10 g) = 0.151 mW/g
Reference Value = 13.1 V/m
Power Drift = -0.04 dB
Maximum value of SAR = 0.308 mW/g

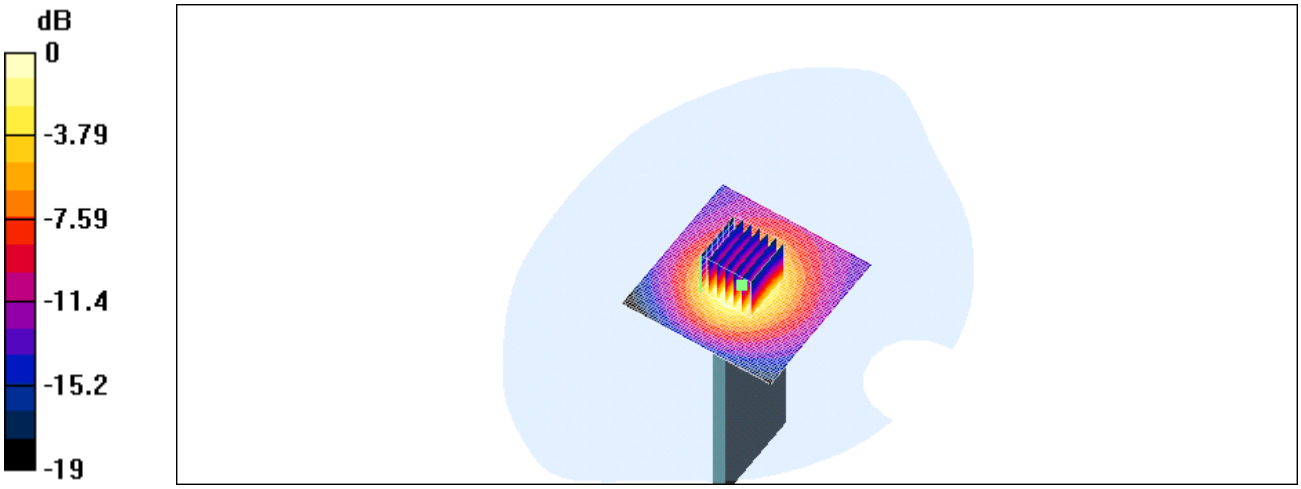

0 dB = 0.308mW/g

802.11g
Horizontal position, lowest channel

Date/Time: 09/09/04 12:35:08

DUT: Wireless PC Card 32-bit CardBus ; Type: WG511V2H1;
Program: 802.11g Wireless PCMCIA Card

Communication System: Wireless LAN; Frequency: 2412 MHz;Duty Cycle: 1:1
Medium: M2450 (σ = 1.92042 mho/m, ε_r = 52.28, ρ = 1000 kg/m^3)
Phantom section: Flat Section

DASY4 Configuration:

- Probe: ET3DV6 - SN1760; ConvF(4.18, 4.18, 4.18); Calibrated: 2004/2/17
- Sensor-Surface: 4mm (Mechanical And Optical Surface Detection)
- Electronics: DAE3 Sn547; Calibrated: 2004/2/10
- Phantom: SAM 12; Type: SAM 4.0; Serial: TP:1150
- Measurement SW: DASY4, V4.1 Build 47; Postprocessing SW: SEMCAD, V1.6 Build 115

Horizontal/Area Scan (61x81x1): Measurement grid: dx=15mm, dy=15mm
Reference Value = 11.2 V/m
Power Drift = -0.3 dB
Maximum value of SAR = 0.247 mW/g

Horizontal/Zoom Scan (7x7x7)/Cube 0: Measurement grid: dx=5mm, dy=5mm, dz=5mm
Peak SAR (extrapolated) = 0.519 W/kg
SAR(1 g) = 0.231 mW/g; SAR(10 g) = 0.114 mW/g
Reference Value = 11.2 V/m
Power Drift = -0.3 dB
Maximum value of SAR = 0.247 mW/g

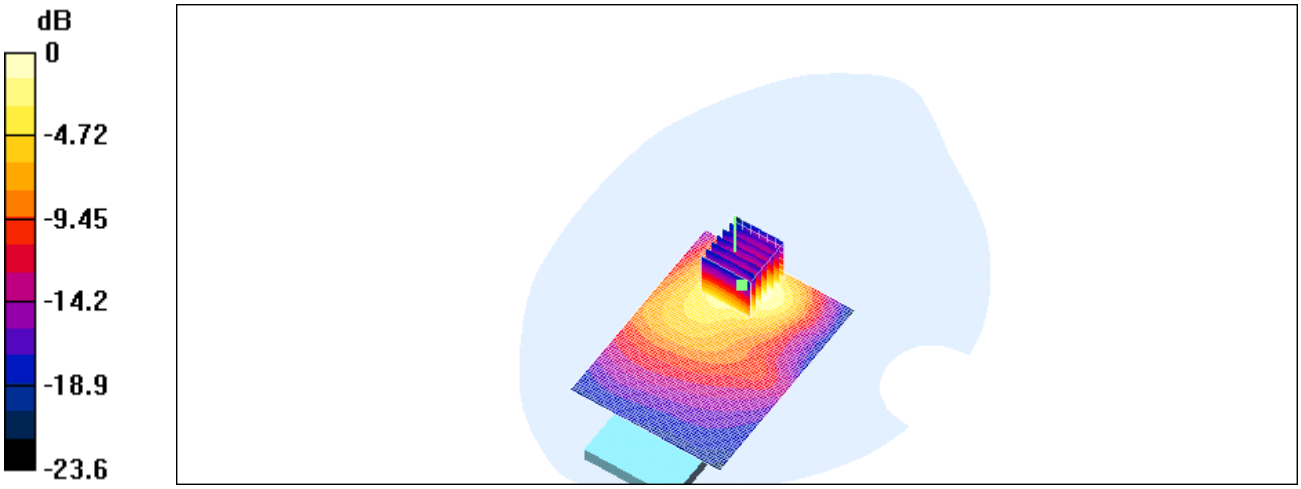

0 dB = 0.247mW/g

802.11g
Horizontal position, middle channel

Date/Time: 09/09/04 12:04:49

DUT: Wireless PC Card 32-bit CardBus ; Type: WG511V2H1;
Program: 802.11g Wireless PCMCIA Card

Communication System: Wireless LAN; Frequency: 2437 MHz;Duty Cycle: 1:1
Medium: M2450 (σ = 1.95134 mho/m, ε_r = 52.4153, ρ = 1000 kg/m^3)
Phantom section: Flat Section

DASY4 Configuration:

- Probe: ET3DV6 - SN1760; ConvF(4.18, 4.18, 4.18); Calibrated: 2004/2/17
- Sensor-Surface: 4mm (Mechanical And Optical Surface Detection)
- Electronics: DAE3 Sn547; Calibrated: 2004/2/10
- Phantom: SAM 12; Type: SAM 4.0; Serial: TP:1150
- Measurement SW: DASY4, V4.1 Build 47; Postprocessing SW: SEMCAD, V1.6 Build 115

Horizontal/Area Scan (61x81x1): Measurement grid: dx=15mm, dy=15mm
Reference Value = 10.9 V/m
Power Drift = -0.005 dB
Maximum value of SAR = 0.253 mW/g

Horizontal/Zoom Scan (7x7x7)/Cube 0: Measurement grid: dx=5mm, dy=5mm, dz=5mm
Peak SAR (extrapolated) = 0.556 W/kg
SAR(1 g) = 0.239 mW/g; SAR(10 g) = 0.117 mW/g
Reference Value = 10.9 V/m
Power Drift = -0.005 dB
Maximum value of SAR = 0.253 mW/g

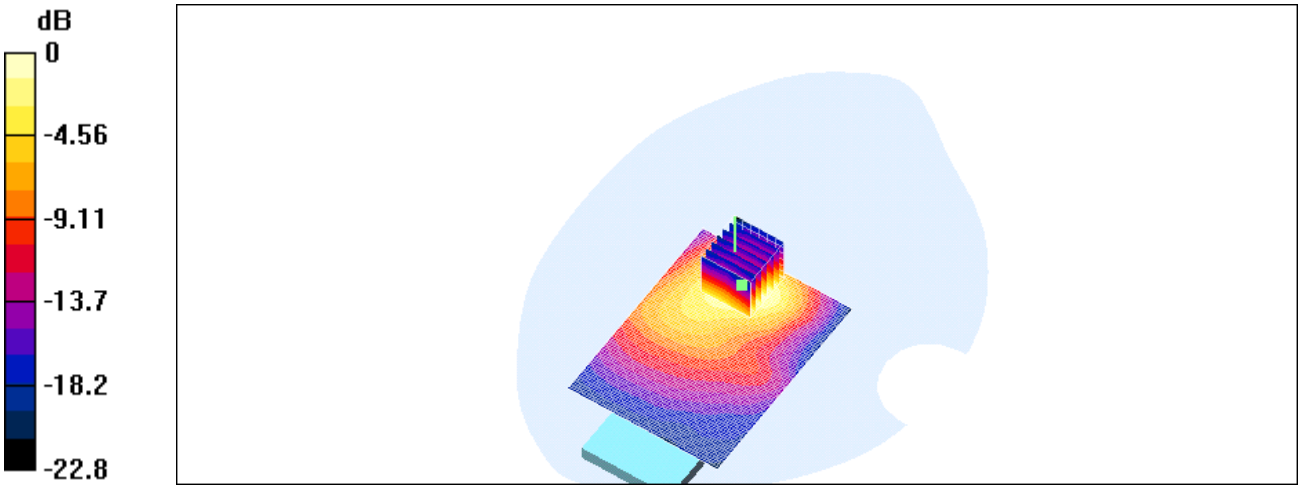

0 dB = 0.253mW/g

802.11g
Horizontal position, highest channel

Date/Time: 09/09/04 12:59:45

DUT: Wireless PC Card 32-bit CardBus ; Type: WG511V2H1;
Program: 802.11g Wireless PCMCIA Card

Communication System: Wireless LAN; Frequency: 2462 MHz;Duty Cycle: 1:1
Medium: M2450 (σ = 2.00339 mho/m, ε_r = 52.213, ρ = 1000 kg/m^3)
Phantom section: Flat Section

DASY4 Configuration:

- Probe: ET3DV6 - SN1760; ConvF(4.18, 4.18, 4.18); Calibrated: 2004/2/17
- Sensor-Surface: 4mm (Mechanical And Optical Surface Detection)
- Electronics: DAE3 Sn547; Calibrated: 2004/2/10
- Phantom: SAM 12; Type: SAM 4.0; Serial: TP:1150
- Measurement SW: DASY4, V4.1 Build 47; Postprocessing SW: SEMCAD, V1.6 Build 115

Horizontal/Area Scan (61x81x1): Measurement grid: dx=15mm, dy=15mm
Reference Value = 10.8 V/m
Power Drift = 0.001 dB
Maximum value of SAR = 0.261 mW/g

Horizontal/Zoom Scan (7x7x7)/Cube 0: Measurement grid: dx=5mm, dy=5mm, dz=5mm
Peak SAR (extrapolated) = 0.57 W/kg
SAR(1 g) = 0.241 mW/g; SAR(10 g) = 0.116 mW/g
Reference Value = 10.8 V/m
Power Drift = 0.001 dB
Maximum value of SAR = 0.254 mW/g

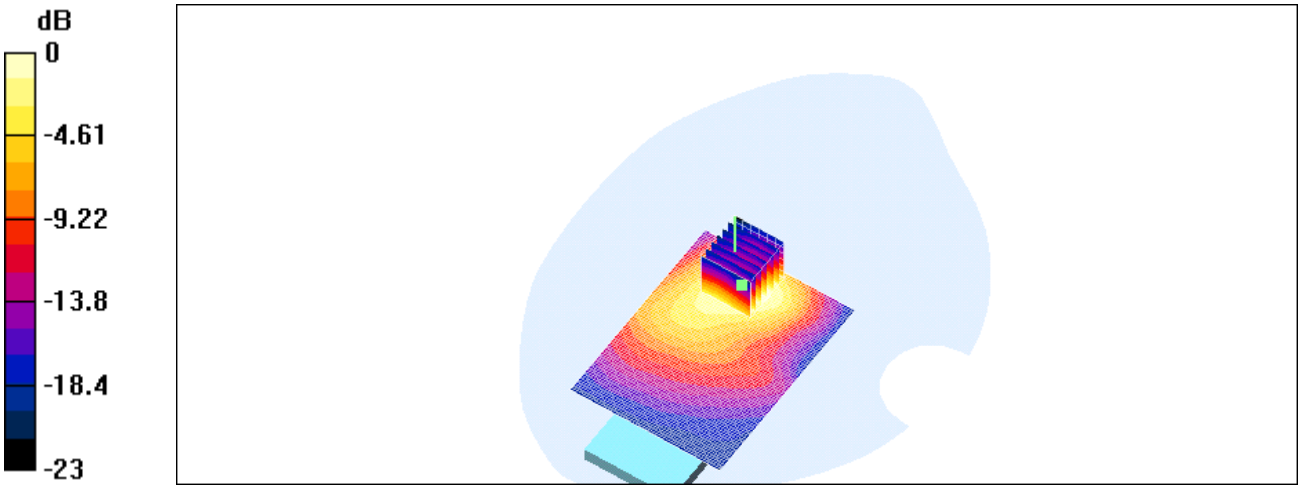

0 dB = 0.254mW/g

SAR System Performance Verification

Date/Time: 09/08/04 09:09:12

DUT: Dipole 2450 MHz; Type: D2450V2; Serial: D2450V2 - SN:727
Program: 2004-09-08

Communication System: CW; Frequency: 2450 MHz;Duty Cycle: 1:1
Medium: M2450 (σ = 1.98454 mho/m, ε_r = 53.2154, ρ = 1000 kg/m^3)
Phantom section: Flat Section

DASY4 Configuration:

- Probe: ET3DV6 - SN1760; ConvF(4.18, 4.18, 4.18); Calibrated: 2004/2/17
- Sensor-Surface: 4mm (Mechanical And Optical Surface Detection)
- Electronics: DAE3 Sn547; Calibrated: 2004/2/10
- Phantom: SAM 12; Type: SAM 4.0; Serial: TP:1150
- Measurement SW: DASY4, V4.1 Build 47; Postprocessing SW: SEMCAD, V1.6 Build 115

System Cal/Area Scan (101x101x1): Measurement grid: dx=10mm, dy=10mm
Reference Value = 90.4 V/m
Power Drift = 0.02 dB
Maximum value of SAR = 15.6 mW/g

System Cal/Zoom Scan (7x7x7)/Cube 0: Measurement grid: dx=5mm, dy=5mm, dz=5mm
Peak SAR (extrapolated) = 30.5 W/kg
SAR(1 g) = 13.8 mW/g; SAR(10 g) = 6.31 mW/g
Reference Value = 90.4 V/m
Power Drift = 0.02 dB
Maximum value of SAR = 15.7 mW/g

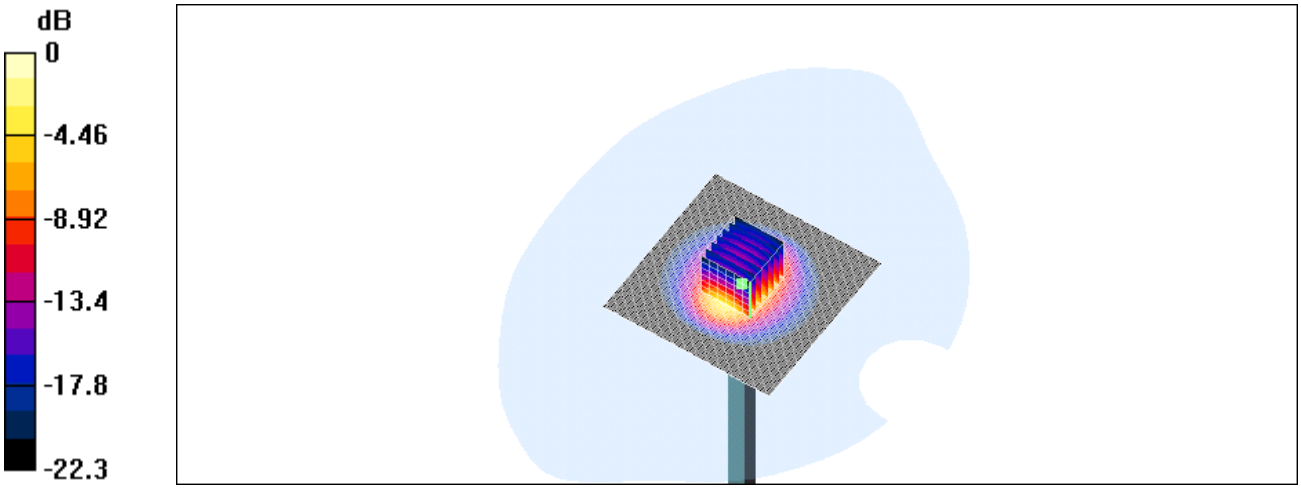

0 dB = 15.7mW/g

Appendix

Photographs of Test Setup

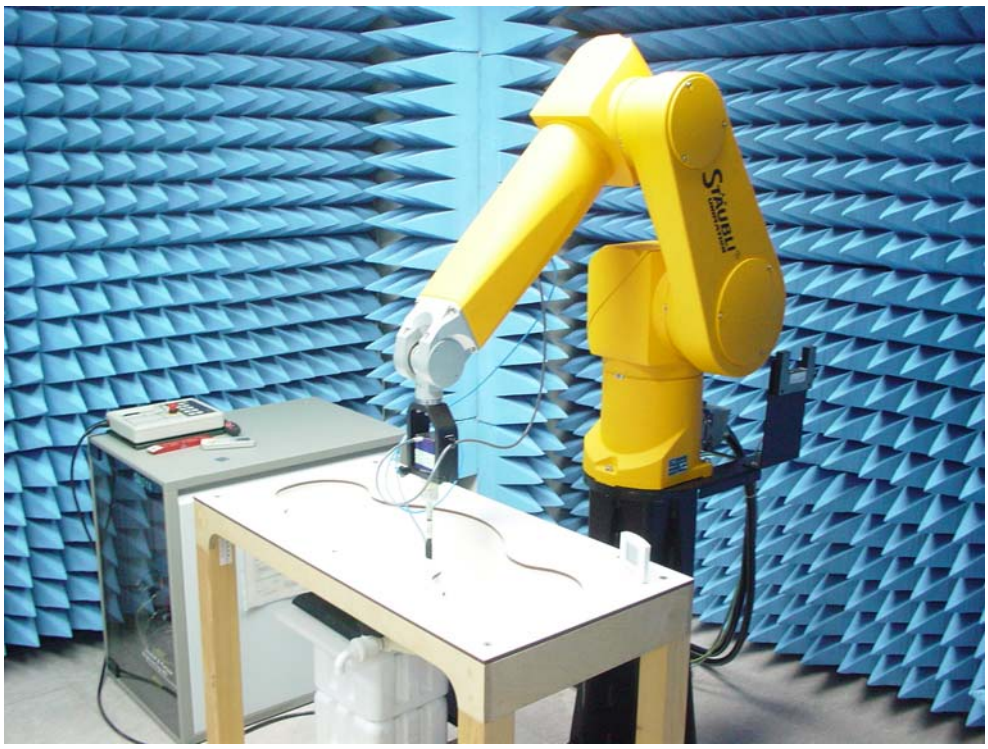

Fig.1 Photograph of the SAR measurement System

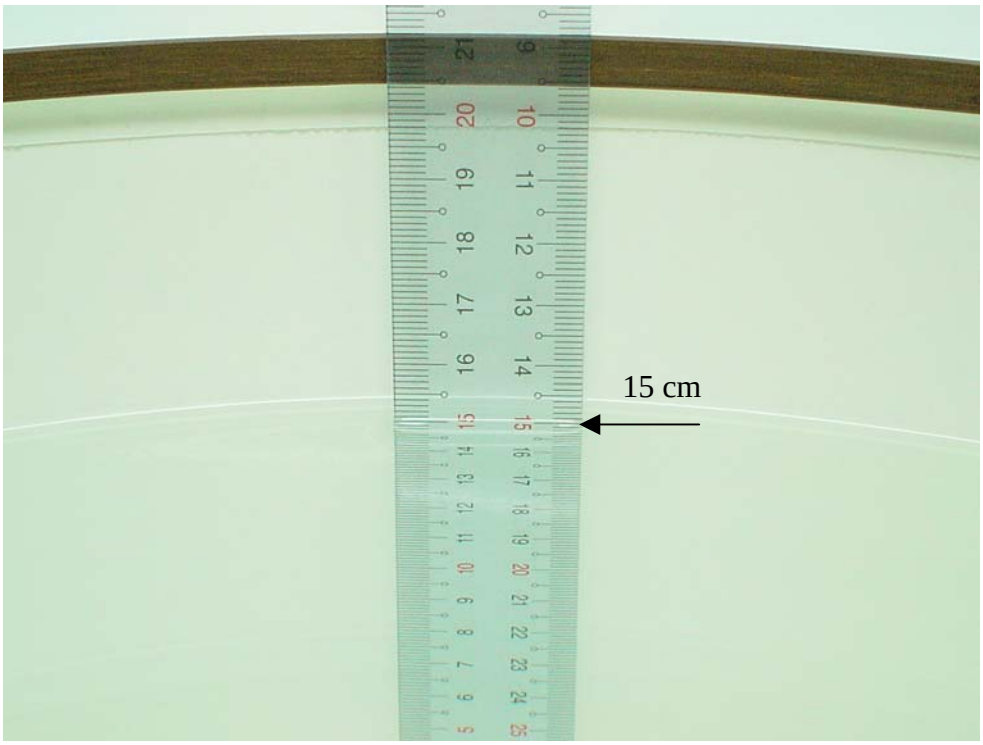

Fig.2 Photograph of the Tissue Simulant Fluid liquid depth 15cm

Fig.3 Photograph of the antenna tip is upward and at a distance of 1.5 cm from the base of the phantom.

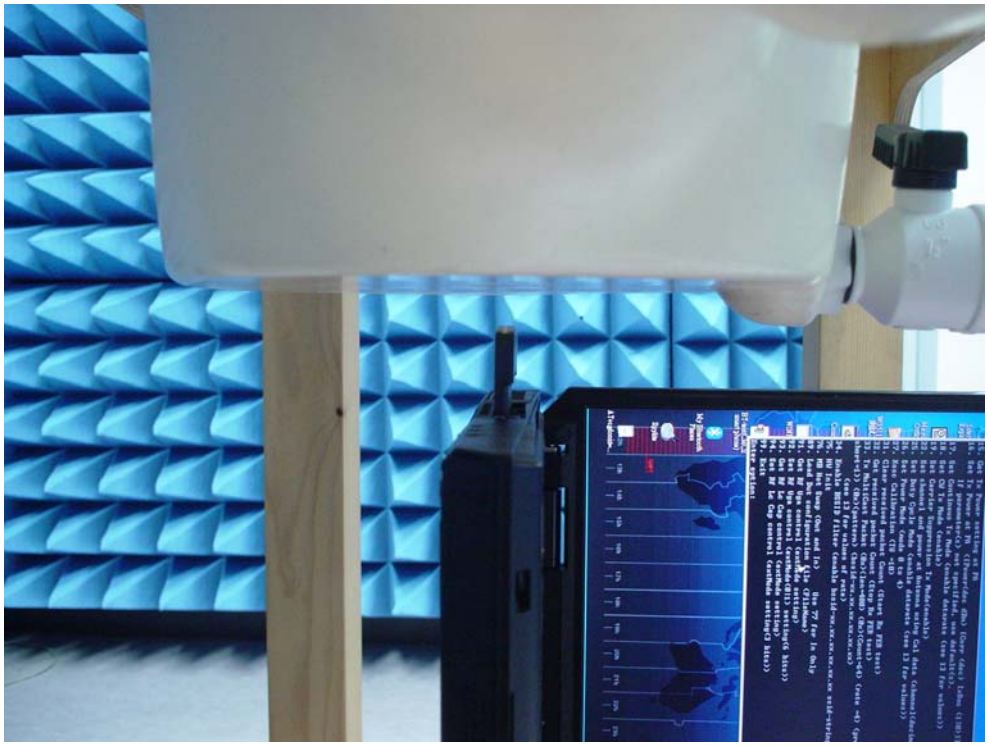

Fig.4 Photograph of the antenna tip is upward and at a distance of 1.5 cm from the base of the phantom.

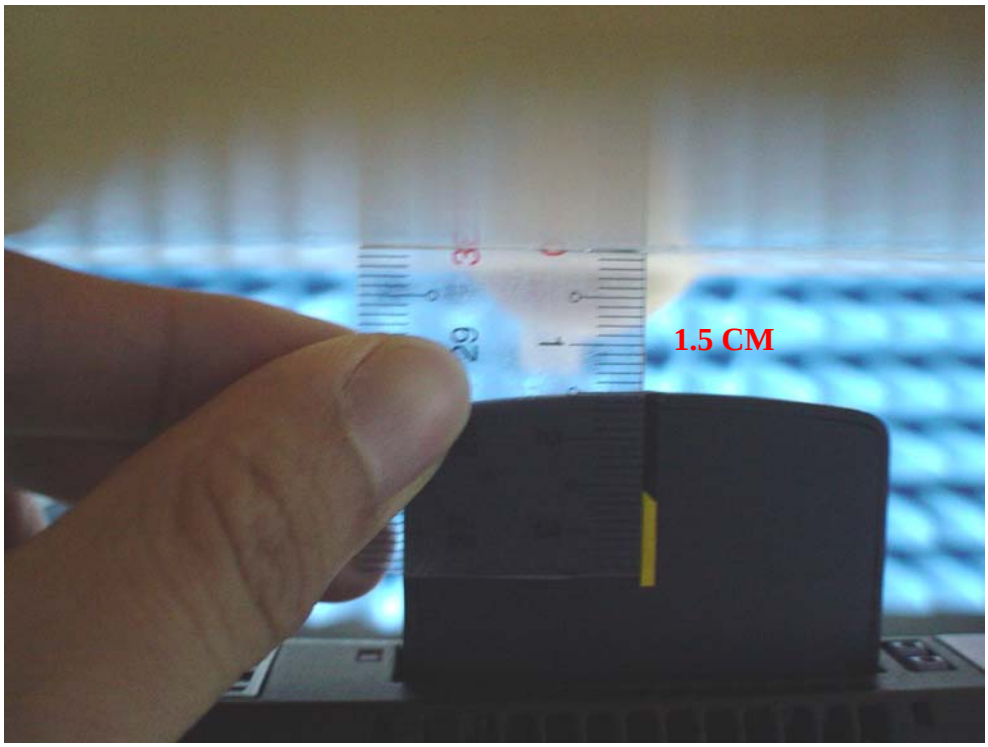

Fig.5 Photograph of the antenna tip is upward and at a distance of 1.5 cm from the base of the phantom.

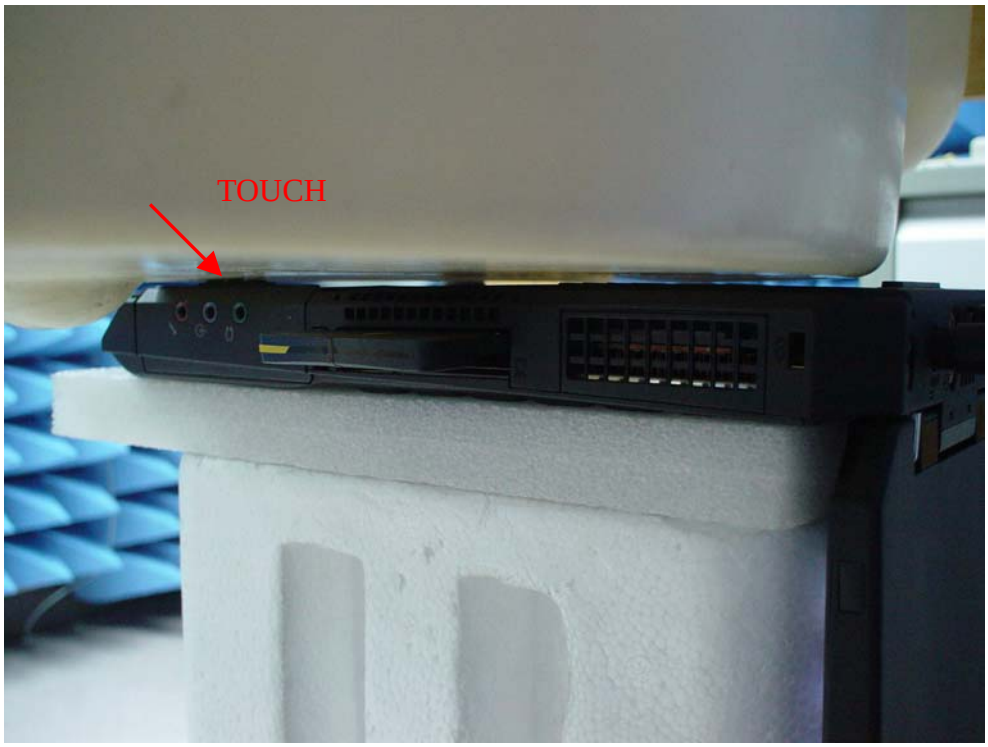

Fig.6 Photograph of the Bottom of the Pc is paralleled and at a distance of 0.0 cm from the base of the phantom.

Fig.7 Photograph of the Bottom of the Pc is paralleled and at a distance of 0.0 cm from the base of the phantom.

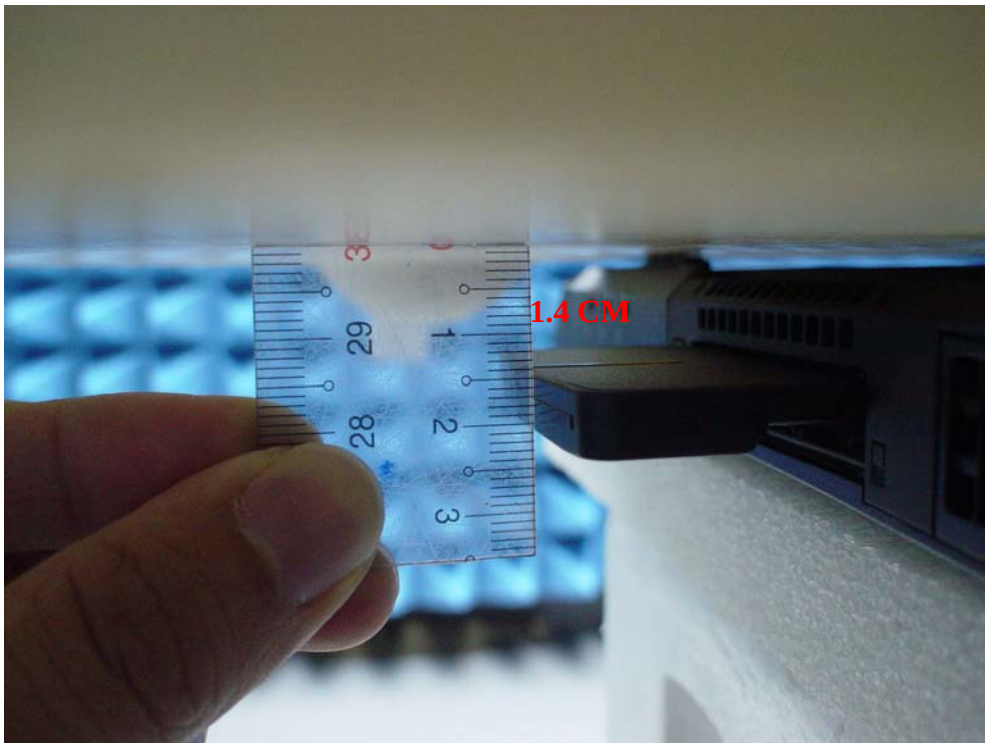

Fig.8 Photograph of the Bottom of the Pc is paralleled and at a distance of 0.0 cm from the base of the phantom, but 1.4 cm Spacing between EUT & Planar Phantom.

Photographs of the EUT

Fig.9 Front view of device

Fig.10 Back view of device

Fig.11 With IBM ThinkPad T30 PCMCIA slot

Fig.12 With IBM ThinkPad T30 PCMCIA slot

Probe Calibration certificate

Calibration Laboratory of
Schmid & Partner
Engineering AG
Zeughausstrasse 43, 8004 Zurich, Switzerland

Client **SGS Taiwan (Auden)**

CALIBRATION CERTIFICATE

Object(s)	ET3DV6 - SN:1760
Calibration procedure(s)	QA CAL-01.v2 Calibration procedure for dosimetric E-field probes
Calibration date:	February 17, 2004
Condition of the calibrated item	In Tolerance (according to the specific calibration document)

This calibration certificate documents the traceability to national standards, which realize the physical units of measurements (SI).
The measurements and the uncertainties with confidence probability are given on the following pages and are part of the certificate.

All calibrations have been conducted in the closed laboratory facility: environment temperature 22 +/- 2 degrees Celsius and humidity < 75%.

Calibration Equipment used (M&TE critical for calibration)

Model Type	ID #	Cal Date (Calibrated by, Certificate No.)	Scheduled Calibration
Power meter EPM E4419B	GB41293874	2-Apr-03 (METAS, No 252-0250)	Apr-04
Power sensor E4412A	MY41495277	2-Apr-03 (METAS, No 252-0250)	Apr-04
Reference 20 dB Attenuator	SN: 5086 (20b)	3-Apr-03 (METAS, No. 251-0340)	Apr-04
Fluke Process Calibrator Type 702	SN: 6295803	8-Sep-03 (Sintrel SCS No. E-030020)	Sep-04
Power sensor HP 8481A	MY41092180	18-Sep-02 (SPEAG, in house check Oct-03)	In house check: Oct 05
RF generator HP 8684C	US3642U01700	4-Aug-99 (SPEAG, in house check Aug-02)	In house check: Aug-05
Network Analyzer HP 8753E	US37390585	18-Oct-01 (SPEAG, in house check Oct-03)	In house check: Oct 05

	Name	Function	Signature
Calibrated by:	Katja Pokovic	Laboratory Director	
Approved by:	Niels Kuster	Quality Manager	

Date issued: February 17, 2004

This calibration certificate is issued as an intermediate solution until the accreditation process (based on ISO/IEC 17025 International Standard) for Calibration Laboratory of Schmid & Partner Engineering AG is completed.