System Check_Head_750MHz

DUT: D750V3-1012

Communication System: CW; Frequency: 750 MHz;Duty Cycle: 1:1
Medium: HSL_750_190623 Medium parameters used: f = 750 MHz; σ = 0.889 S/m; ε_r = 43.096; ρ = 1000 kg/m^3
Ambient Temperature：23.3 ℃; Liquid Temperature：22.3 ℃

DASY5 Configuration:
- Probe: ES3DV3 - SN3124; ConvF(6.15, 6.15, 6.15) @ 750 MHz; Calibrated: 2019/1/15
- Sensor-Surface: 3mm (Mechanical Surface Detection)
- Electronics: DAE4 Sn316; Calibrated: 2019/1/3
- Phantom: SAM_Left; Type: QD000P40CD; Serial: TP:1477
- Measurement SW: DASY52, Version 52.10 (2);SEMCAD X Version 14.6.12 (7470)

Pin=250mW/Area Scan (61x61x1): Interpolated grid: dx=1.500 mm, dy=1.500 mm
Maximum value of SAR (interpolated) = 2.43 W/kg

Pin=250mW/Zoom Scan (5x5x7)/Cube 0: Measurement grid: dx=8mm, dy=8mm, dz=5mm
Reference Value = 51.55 V/m; Power Drift = -0.03 dB
Peak SAR (extrapolated) = 2.83 W/kg
SAR(1 g) = 1.94 W/kg; SAR(10 g) = 1.3 W/kg
Maximum value of SAR (measured) = 2.24 W/kg

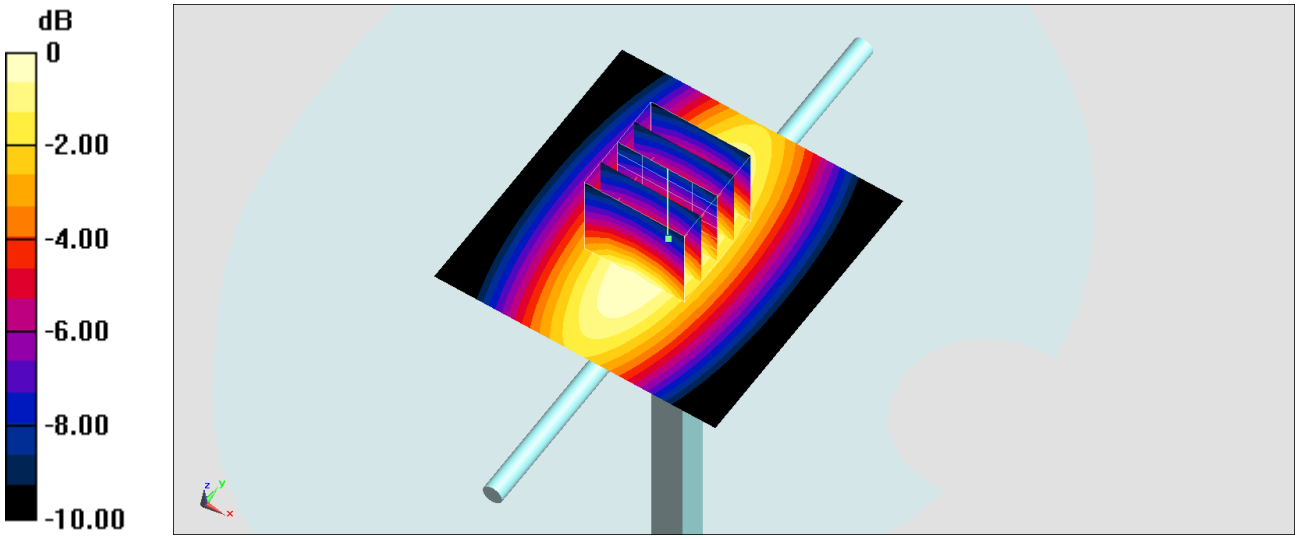

0 dB = 2.24 W/kg = 3.50 dBW/kg

System Check_Head_750MHz

DUT: D750V3-1012

Communication System: CW; Frequency: 750 MHz;Duty Cycle: 1:1
Medium: HSL_750_190624 Medium parameters used: f = 750 MHz; σ = 0.898 S/m; ε_r = 43.417; ρ = 1000 kg/m^3
Ambient Temperature：23.5 ℃; Liquid Temperature：22.5 ℃

DASY5 Configuration:
- Probe: ES3DV3 - SN3124; ConvF(6.15, 6.15, 6.15) @ 750 MHz; Calibrated: 2019/1/15
- Sensor-Surface: 3mm (Mechanical Surface Detection)
- Electronics: DAE4 Sn316; Calibrated: 2019/1/3
- Phantom: SAM_Left; Type: QD000P40CD; Serial: TP:1477
- Measurement SW: DASY52, Version 52.10 (2);SEMCAD X Version 14.6.12 (7470)

Pin=250mW/Area Scan (61x61x1): Interpolated grid: dx=1.500 mm, dy=1.500 mm
Maximum value of SAR (interpolated) = 2.46 W/kg

Pin=250mW/Zoom Scan (5x5x7)/Cube 0: Measurement grid: dx=8mm, dy=8mm, dz=5mm
Reference Value = 51.55 V/m; Power Drift = -0.01 dB
Peak SAR (extrapolated) = 2.86 W/kg
SAR(1 g) = 1.95 W/kg; SAR(10 g) = 1.31 W/kg
Maximum value of SAR (measured) = 2.26 W/kg

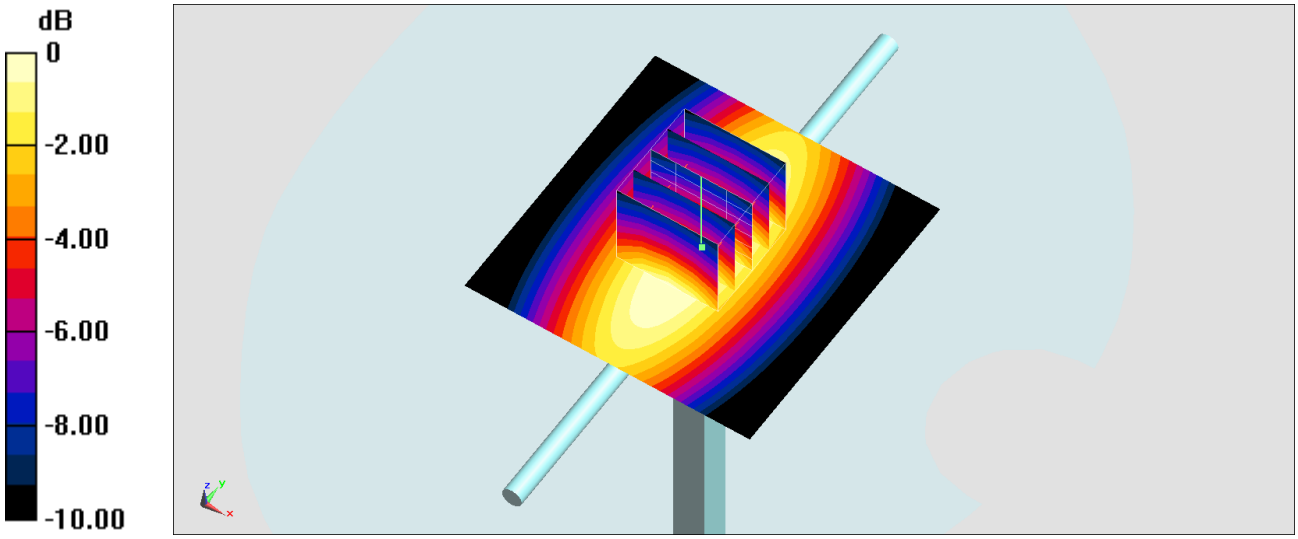

0 dB = 2.26 W/kg = 3.54 dBW/kg

System Check_Head_835MHz

DUT: D835V2-499

Communication System: CW; Frequency: 835 MHz;Duty Cycle: 1:1
Medium: HSL_850_190624 Medium parameters used: f = 835 MHz; σ = 0.885 S/m; ε_r = 42.141; ρ = 1000 kg/m^3
Ambient Temperature：23.5 ℃; Liquid Temperature：22.5 ℃

DASY5 Configuration:
- Probe: ES3DV3 - SN3124; ConvF(5.97, 5.97, 5.97) @ 835 MHz; Calibrated: 2019/1/15
- Sensor-Surface: 3mm (Mechanical Surface Detection)
- Electronics: DAE4 Sn316; Calibrated: 2019/1/3
- Phantom: SAM_Left; Type: QD000P40CD; Serial: TP:1477
- Measurement SW: DASY52, Version 52.10 (2);SEMCAD X Version 14.6.12 (7470)

Pin=250mW/Area Scan (61x61x1): Interpolated grid: dx=1.500 mm, dy=1.500 mm
Maximum value of SAR (interpolated) = 2.94 W/kg

Pin=250mW/Zoom Scan (5x5x7)/Cube 0: Measurement grid: dx=8mm, dy=8mm, dz=5mm
Reference Value = 58.76 V/m; Power Drift = -0.06 dB
Peak SAR (extrapolated) = 3.71 W/kg
SAR(1 g) = 2.48 W/kg; SAR(10 g) = 1.63 W/kg
Maximum value of SAR (measured) = 2.88 W/kg

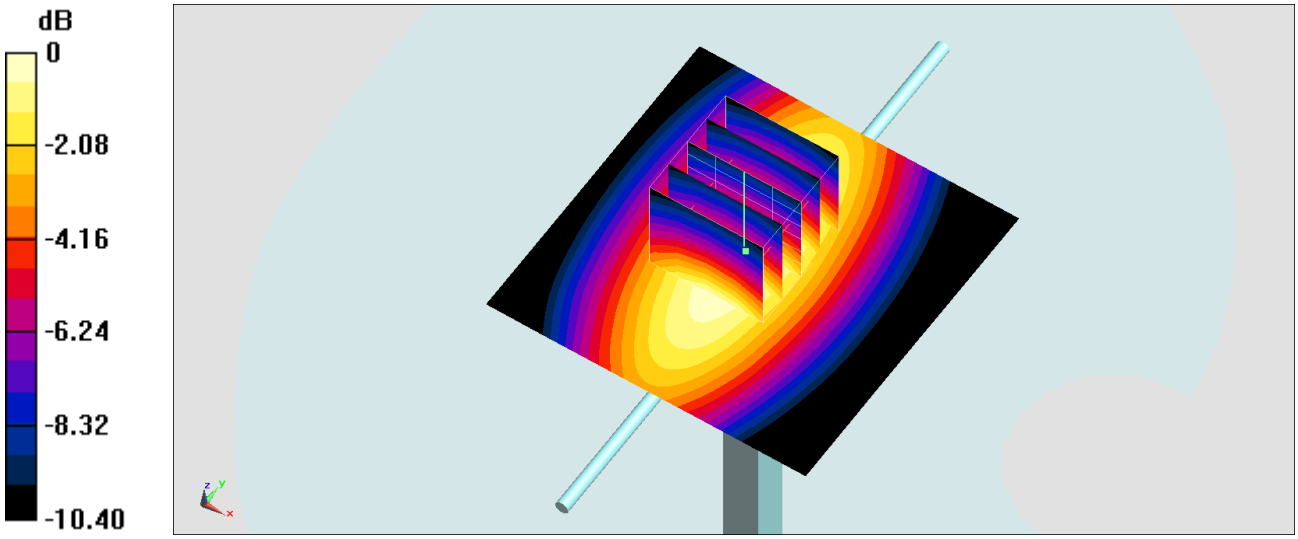

0 dB = 2.88 W/kg = 4.59 dBW/kg

System Check_Head_835MHz

DUT: D835V2-499

Communication System: CW; Frequency: 835 MHz;Duty Cycle: 1:1
Medium: HSL_850_190625 Medium parameters used: f = 835 MHz; σ = 0.906 S/m; ε_r = 43.345; ρ = 1000 kg/m^3
Ambient Temperature：23.7 ℃; Liquid Temperature：22.7 ℃

DASY5 Configuration:
- Probe: ES3DV3 - SN3124; ConvF(5.97, 5.97, 5.97) @ 835 MHz; Calibrated: 2019/1/15
- Sensor-Surface: 3mm (Mechanical Surface Detection)
- Electronics: DAE4 Sn316; Calibrated: 2019/1/3
- Phantom: SAM_Left; Type: QD000P40CD; Serial: TP:1477
- Measurement SW: DASY52, Version 52.10 (2);SEMCAD X Version 14.6.12 (7470)

Pin=250mW/Area Scan (61x61x1): Interpolated grid: dx=1.500 mm, dy=1.500 mm
Maximum value of SAR (interpolated) = 2.61 W/kg

Pin=250mW/Zoom Scan (5x5x7)/Cube 0: Measurement grid: dx=8mm, dy=8mm, dz=5mm
Reference Value = 54.89 V/m; Power Drift = 0.03 dB
Peak SAR (extrapolated) = 3.33 W/kg
SAR(1 g) = 2.22 W/kg; SAR(10 g) = 1.47 W/kg
Maximum value of SAR (measured) = 2.59 W/kg

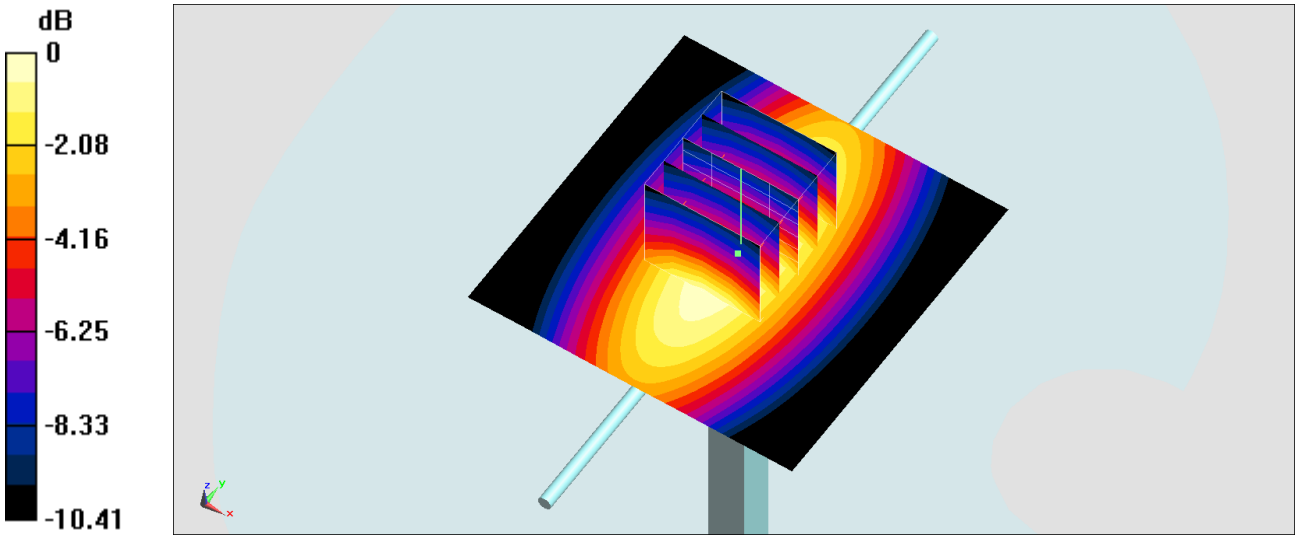

0 dB = 2.59 W/kg = 4.13 dBW/kg

System Check_Head_1750MHz

DUT: D1750V2-1068

Communication System: CW; Frequency: 1750 MHz;Duty Cycle: 1:1
Medium: HSL_1750_190623 Medium parameters used: f = 1750 MHz; σ = 1.372 S/m; ε_r = 40.787; ρ = 1000 kg/m^3
Ambient Temperature：23.2 ℃; Liquid Temperature：22.2 ℃

DASY5 Configuration:
- Probe: ES3DV3 - SN3124; ConvF(5.18, 5.18, 5.18) @ 1750 MHz; Calibrated: 2019/1/15
- Sensor-Surface: 3mm (Mechanical Surface Detection)
- Electronics: DAE4 Sn316; Calibrated: 2019/1/3
- Phantom: SAM_Left; Type: QD000P40CD; Serial: TP:1477
- Measurement SW: DASY52, Version 52.10 (2);SEMCAD X Version 14.6.12 (7470)

Pin=250mW/Area Scan (61x61x1): Interpolated grid: dx=1.500 mm, dy=1.500 mm
Maximum value of SAR (interpolated) = 10.8 W/kg

Pin=250mW/Zoom Scan (5x5x7)/Cube 0: Measurement grid: dx=8mm, dy=8mm, dz=5mm
Reference Value = 90.30 V/m; Power Drift = -0.06 dB
Peak SAR (extrapolated) = 14.9 W/kg
SAR(1 g) = 8.47 W/kg; SAR(10 g) = 4.54 W/kg
Maximum value of SAR (measured) = 10.5 W/kg

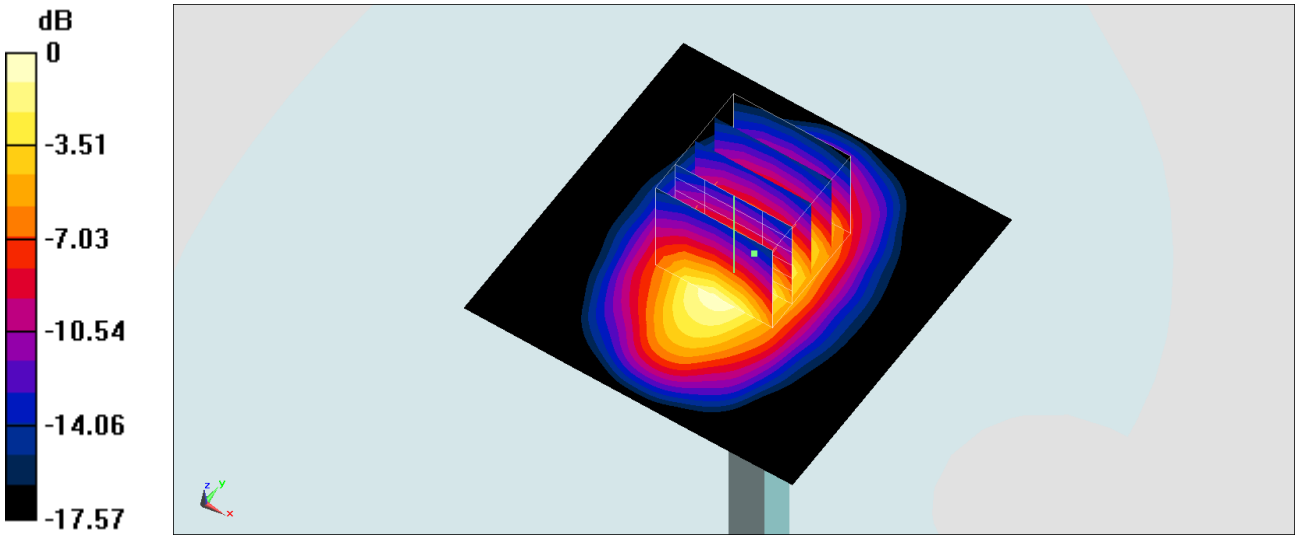

0 dB = 10.5 W/kg = 10.21 dBW/kg

System Check_Head_1900MHz

DUT: D1900V2-5d041

Communication System: CW; Frequency: 1900 MHz;Duty Cycle: 1:1
Medium: HSL_1900_190620 Medium parameters used: f = 1900 MHz; σ = 1.424 S/m; ε_r = 39.547; ρ = 1000 kg/m^3
Ambient Temperature：23.4 ℃; Liquid Temperature：22.4 ℃

DASY5 Configuration:
- Probe: ES3DV3 - SN3124; ConvF(4.95, 4.95, 4.95) @ 1900 MHz; Calibrated: 2019/1/15
- Sensor-Surface: 3mm (Mechanical Surface Detection)
- Electronics: DAE4 Sn316; Calibrated: 2019/1/3
- Phantom: SAM_Right; Type: SAM; Serial: TP:1479
- Measurement SW: DASY52, Version 52.10 (2);SEMCAD X Version 14.6.12 (7470)

Pin=250mW/Area Scan (61x61x1): Interpolated grid: dx=1.500 mm, dy=1.500 mm
Maximum value of SAR (interpolated) = 13.6 W/kg

Pin=250mW/Zoom Scan (5x5x7)/Cube 0: Measurement grid: dx=8mm, dy=8mm, dz=5mm
Reference Value = 101.2 V/m; Power Drift = -0.05 dB
Peak SAR (extrapolated) = 19.9 W/kg
SAR(1 g) = 10.5 W/kg; SAR(10 g) = 5.37 W/kg
Maximum value of SAR (measured) = 13.3 W/kg

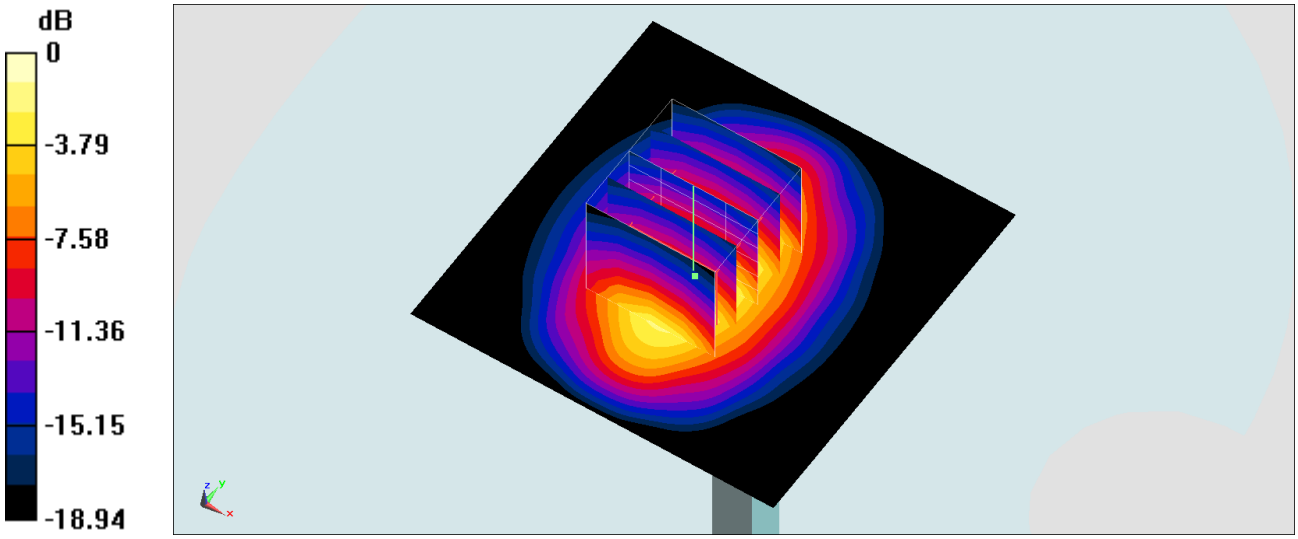

0 dB = 13.3 W/kg = 11.24 dBW/kg

System Check_Head_2450MHz

DUT: D2450V2-736

Communication System: CW; Frequency: 2450 MHz;Duty Cycle: 1:1
Medium: HSL_2450_190626 Medium parameters used : f = 2450 MHz; σ = 1.768 S/m; ε_r = 40.614; ρ = 1000 kg/m^3
Ambient Temperature：23.9 ℃; Liquid Temperature：22.9 ℃

DASY5 Configuration
- Probe: EX3DV4 - SN7306;ConvF(7.43, 7.43, 7.43) @ 2450 MHz;Calibrated: 2018/7/26
- Sensor-Surface: 1.4mm (Mechanical Surface Detection)
- Electronics: DAE4 Sn1399; Calibrated: 2018/11/16
- Phantom: SAM_Left; Type: QD000P40CD; Serial: S/N:1801
- Measurement SW: DASY52, Version 52.10 (2); SEMCAD X Version 14.6.12 (7470)

Pin=250mW/Area Scan (81x81x1): Interpolated grid: dx=1.200 mm, dy=1.200 mm
Maximum value of SAR (interpolated) = 21.2 W/kg

Pin=250mW/Zoom Scan (7x7x7)/Cube 0: Measurement grid: dx=5mm, dy=5mm, dz=5mm
Reference Value = 114.0 V/m; Power Drift = -0.03 dB
Peak SAR (extrapolated) = 25.9 W/kg
SAR(1 g) = 12.5 W/kg; SAR(10 g) = 5.77 W/kg
Maximum value of SAR (measured) = 20.9 W/kg

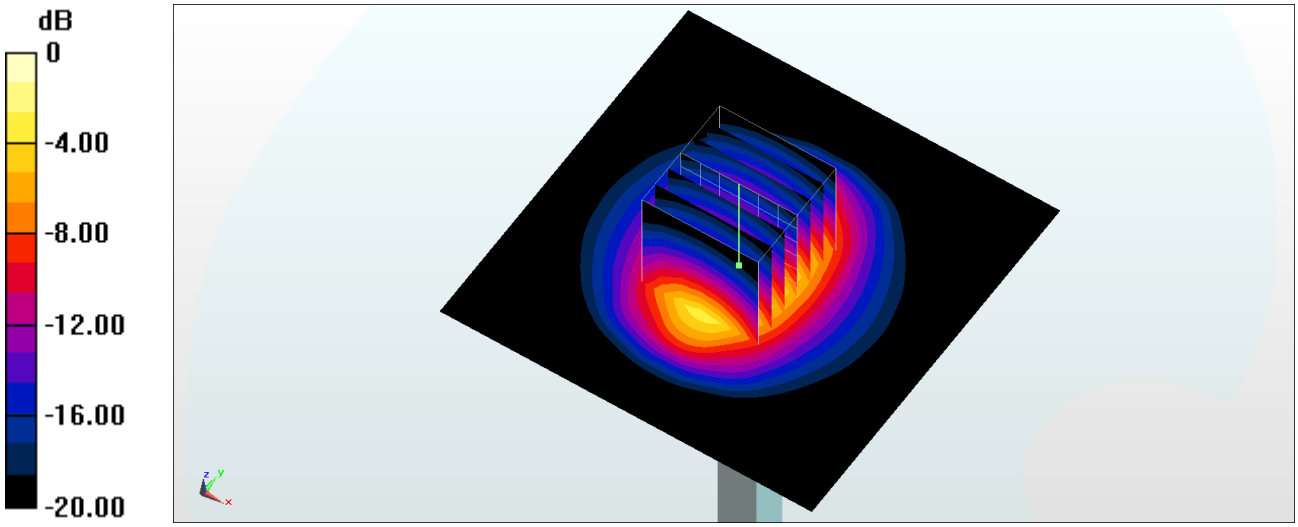

0 dB = 20.9 W/kg = 13.20 dBW/kg

System Check_Head_2600MHz

DUT: D2600V2-1008

Communication System: CW; Frequency: 2600 MHz;Duty Cycle: 1:1
Medium: HSL_2600_190619 Medium parameters used: f = 2600 MHz; σ = 1.948 S/m; ε_r = 38.002; ρ = 1000 kg/m^3
Ambient Temperature：23.3 ℃; Liquid Temperature：22.3 ℃

DASY5 Configuration:
- Probe: ES3DV3 - SN3124; ConvF(4.37, 4.37, 4.37) @ 2600 MHz; Calibrated: 2019/1/15
- Sensor-Surface: 3mm (Mechanical Surface Detection)
- Electronics: DAE4 Sn316; Calibrated: 2019/1/3
- Phantom: SAM_Left; Type: QD000P40CD; Serial: TP:1477
- Measurement SW: DASY52, Version 52.10 (2);SEMCAD X Version 14.6.12 (7470)

Pin=250mW/Area Scan (81x81x1): Interpolated grid: dx=1.200 mm, dy=1.200 mm
Maximum value of SAR (interpolated) = 18.5 W/kg

Pin=250mW/Zoom Scan (7x7x7)/Cube 0: Measurement grid: dx=5mm, dy=5mm, dz=5mm
Reference Value = 97.51 V/m; Power Drift = -0.02 dB
Peak SAR (extrapolated) = 29.0 W/kg
SAR(1 g) = 13.4 W/kg; SAR(10 g) = 6.05 W/kg
Maximum value of SAR (measured) = 18.0 W/kg

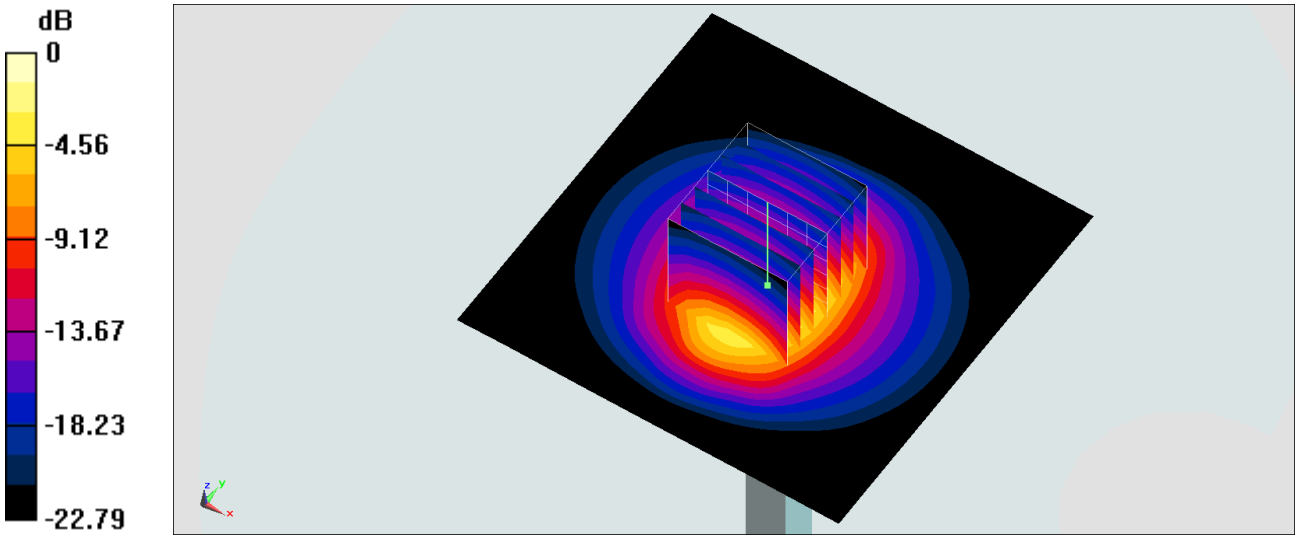

0 dB = 18.0 W/kg = 12.55 dBW/kg

System Check_Head_5250MHz

DUT: D5GHzV2-1006

Communication System: CW; Frequency: 5250 MHz;Duty Cycle: 1:1
Medium: HSL_5G_190627 Medium parameters used : f = 5250 MHz; σ = 4.695 S/m; ε_r = 36.183; ρ = 1000 kg/m^3
Ambient Temperature：23.6 ℃; Liquid Temperature：22.6 ℃

DASY5 Configuration
- Probe: EX3DV4 - SN7306;ConvF(5.38, 5.38, 5.38) @ 5250 MHz;Calibrated: 2018/7/26
- Sensor-Surface: 1.4mm (Mechanical Surface Detection)
- Electronics: DAE4 Sn1399; Calibrated: 2018/11/16
- Phantom: SAM_Left; Type: QD000P40CD; Serial: S/N:1801
- Measurement SW: DASY52, Version 52.10 (2); SEMCAD X Version 14.6.12 (7470)

Pin=100mW/Area Scan (71x71x1): Interpolated grid: dx=1.000 mm, dy=1.000 mm
Maximum value of SAR (interpolated) = 18.5 W/kg

Pin=100mW/Zoom Scan (7x7x7)/Cube 0: Measurement grid: dx=4mm, dy=4mm, dz=1.4mm
Reference Value = 71.01 V/m; Power Drift = -0.18 dB
Peak SAR (extrapolated) = 31.9 W/kg
SAR(1 g) = 7.81 W/kg; SAR(10 g) = 2.14 W/kg
Maximum value of SAR (measured) = 19.4 W/kg

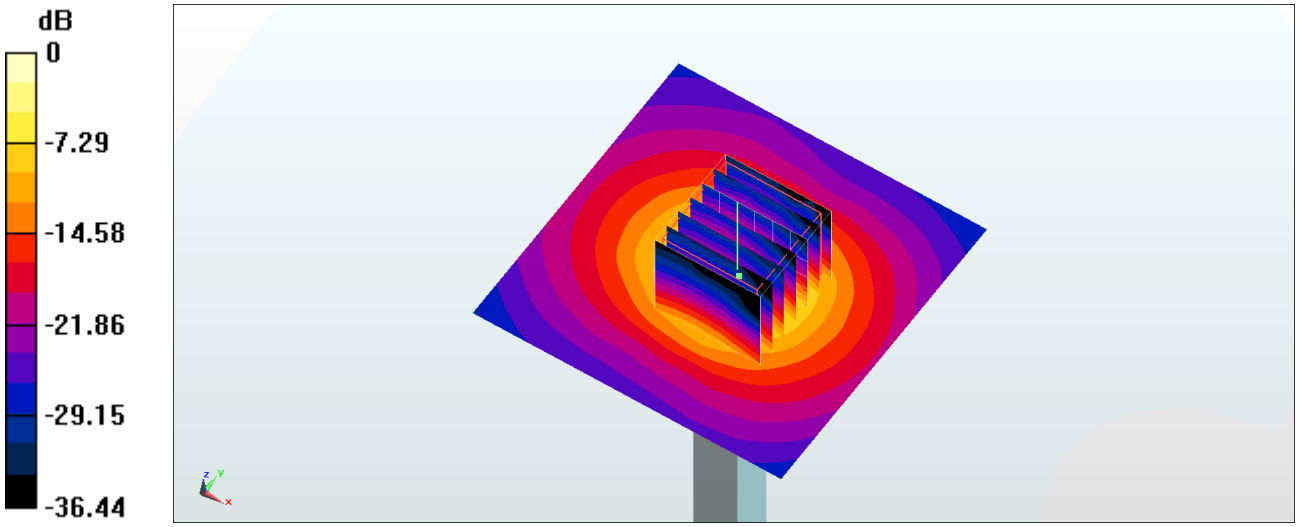

0 dB = 19.4 W/kg = 12.88 dBW/kg

System Check_Head_5250MHz

DUT: D5GHzV2-1006

Communication System: CW; Frequency: 5250 MHz;Duty Cycle: 1:1
Medium: HSL_5G_190707 Medium parameters used: f = 5250 MHz; σ = 4.537 S/m; ε_r = 37.569; ρ = 1000 kg/m^3
Ambient Temperature：23.8 ℃; Liquid Temperature：22.8 ℃

DASY5 Configuration:
- Probe: EX3DV4 - SN7306; ConvF(5.38, 5.38, 5.38) @ 5250 MHz; Calibrated: 2018/7/26
- Sensor-Surface: 1.4mm (Mechanical Surface Detection)
- Electronics: DAE4 Sn1399; Calibrated: 2018/11/16
- Phantom: SAM_Left; Type: QD000P40CD; Serial: S/N:1801
- Measurement SW: DASY52, Version 52.10 (2);SEMCAD X Version 14.6.12 (7470)

Pin=100mW/Area Scan (71x71x1): Interpolated grid: dx=1.000 mm, dy=1.000 mm
Maximum value of SAR (interpolated) = 17.9 W/kg

Pin=100mW/Zoom Scan (7x7x7)/Cube 0: Measurement grid: dx=4mm, dy=4mm, dz=1.4mm
Reference Value = 71.01 V/m; Power Drift = -0.17 dB
Peak SAR (extrapolated) = 30.9 W/kg
SAR(1 g) = 7.55 W/kg; SAR(10 g) = 2.17 W/kg
Maximum value of SAR (measured) = 18.7 W/kg

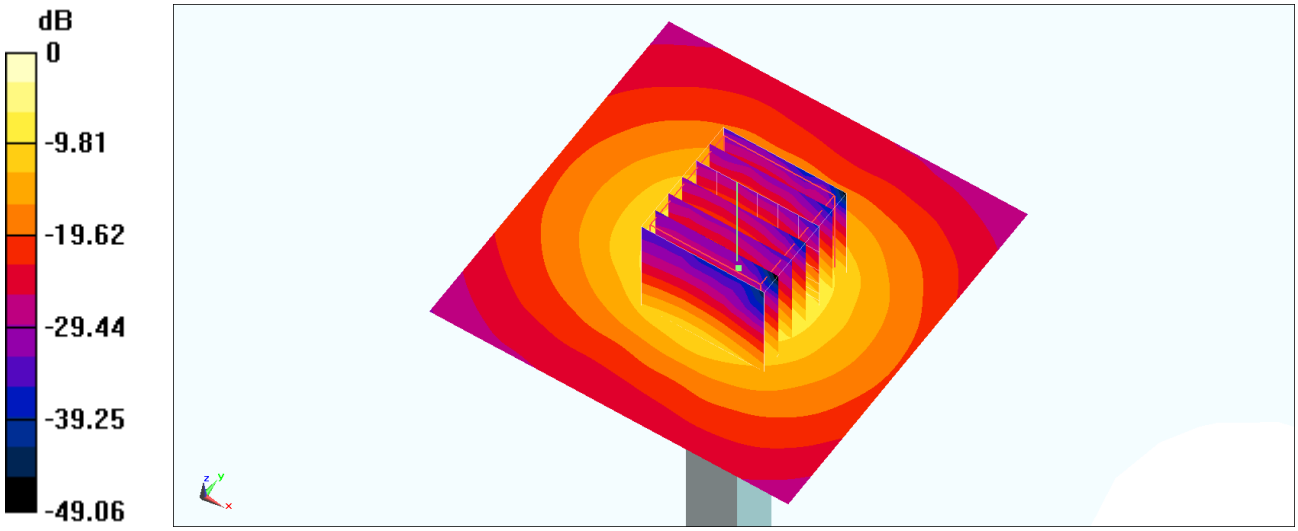

0 dB = 18.7 W/kg = 12.72 dBW/kg

System Check_Head_5600MHz

DUT: D5GHzV2-1006

Communication System: CW; Frequency: 5600 MHz;Duty Cycle: 1:1
Medium: HSL_5G_190627 Medium parameters used: f = 5600 MHz; σ = 5.06 S/m; ε_r = 35.683; ρ = 1000 kg/m^3
Ambient Temperature：23.6 ℃; Liquid Temperature：22.6 ℃

DASY5 Configuration
- Probe: EX3DV4 - SN7306;ConvF(4.71, 4.71, 4.71) @ 5600 MHz;Calibrated: 2018/7/26
- Sensor-Surface: 1.4mm (Mechanical Surface Detection)
- Electronics: DAE4 Sn1399; Calibrated: 2018/11/16
- Phantom: SAM_Left; Type: QD000P40CD; Serial: S/N:1801
- Measurement SW: DASY52, Version 52.10 (2); SEMCAD X Version 14.6.12 (7470)

Pin=100mW/Area Scan (71x71x1): Interpolated grid: dx=1.000 mm, dy=1.000 mm
Maximum value of SAR (interpolated) = 26.1 W/kg

Pin=100mW/Zoom Scan (7x7x7)/Cube 0: Measurement grid: dx=4mm, dy=4mm, dz=1.4mm
Reference Value = 48.84 V/m; Power Drift = -0.12 dB
Peak SAR (extrapolated) = 38.6 W/kg
SAR(1 g) = 8.82 W/kg; SAR(10 g) = 2.49 W/kg
Maximum value of SAR (measured) = 23.1 W/kg

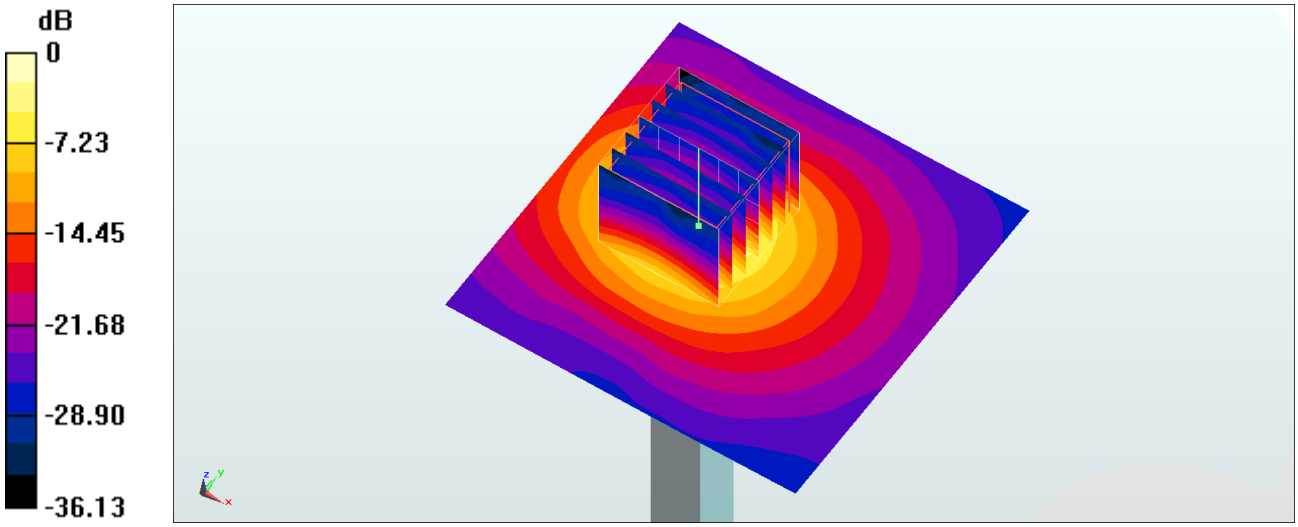

0 dB = 23.1 W/kg = 13.64 dBW/kg

System Check_Head_5600MHz

DUT: D5GHzV2-1006

Communication System: CW; Frequency: 5600 MHz;Duty Cycle: 1:1
Medium: HSL_5G_190707 Medium parameters used: f = 5600 MHz; σ = 4.88 S/m; ε_r = 37.076; ρ = 1000 kg/m^3
Ambient Temperature：23.8 ℃; Liquid Temperature：22.8 ℃

DASY5 Configuration:
- Probe: EX3DV4 - SN7306; ConvF(4.71, 4.71, 4.71) @ 5600 MHz; Calibrated: 2018/7/26
- Sensor-Surface: 1.4mm (Mechanical Surface Detection)
- Electronics: DAE4 Sn1399; Calibrated: 2018/11/16
- Phantom: SAM_Left; Type: QD000P40CD; Serial: S/N:1801
- Measurement SW: DASY52, Version 52.10 (2);SEMCAD X Version 14.6.12 (7470)

Pin=100mW/Area Scan (71x71x1): Interpolated grid: dx=1.000 mm, dy=1.000 mm
Maximum value of SAR (interpolated) = 25.2 W/kg

Pin=100mW/Zoom Scan (7x7x7)/Cube 0: Measurement grid: dx=4mm, dy=4mm, dz=1.4mm
Reference Value = 48.84 V/m; Power Drift = -0.02 dB
Peak SAR (extrapolated) = 37.2 W/kg
SAR(1 g) = 8.51 W/kg; SAR(10 g) = 2.4 W/kg
Maximum value of SAR (measured) = 22.3 W/kg

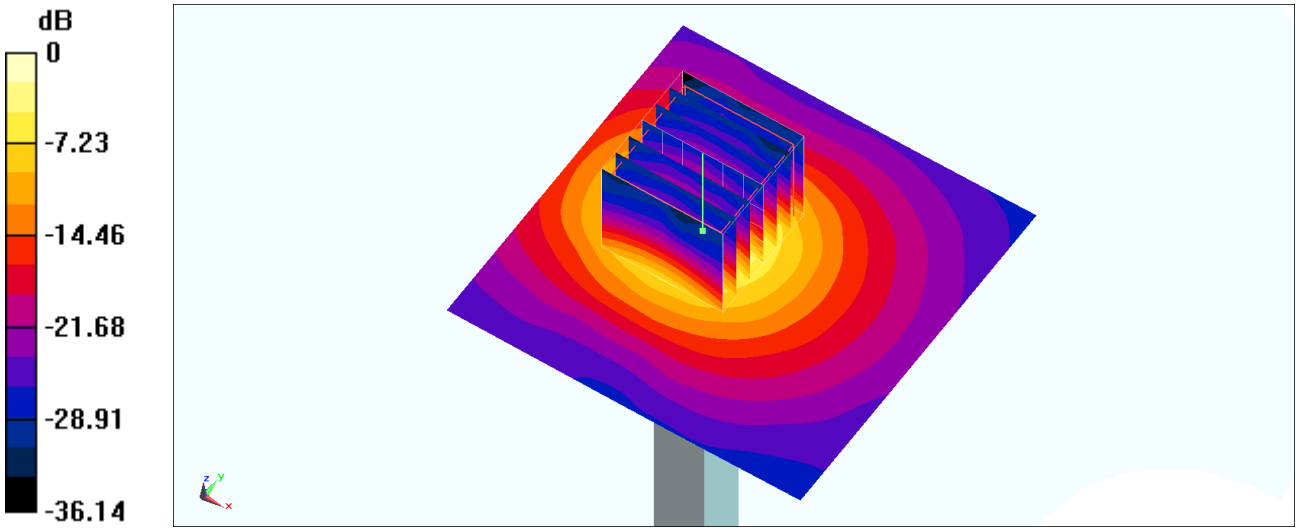

0 dB = 22.3 W/kg = 13.48 dBW/kg

System Check_Head_5750MHz

DUT: D5GHzV2-1006

Communication System: CW; Frequency: 5750 MHz;Duty Cycle: 1:1
Medium: HSL_5G_190628 Medium parameters used: f = 5750 MHz; σ = 5.222 S/m; ε_r = 35.473; ρ = 1000 kg/m^3
Ambient Temperature：23.7 ℃; Liquid Temperature：22.7 ℃

DASY5 Configuration
- Probe: EX3DV4 - SN7306;ConvF(5, 5, 5) @ 5750 MHz;Calibrated: 2018/7/26
- Sensor-Surface: 1.4mm (Mechanical Surface Detection)
- Electronics: DAE4 Sn1399; Calibrated: 2018/11/16
- Phantom: SAM_Left; Type: QD000P40CD; Serial: S/N:1801
- Measurement SW: DASY52, Version 52.10 (2); SEMCAD X Version 14.6.12 (7470)

Pin=100mW/Area Scan (71x71x1): Interpolated grid: dx=1.000 mm, dy=1.000 mm
Maximum value of SAR (interpolated) = 19.2 W/kg

Pin=100mW/Zoom Scan (7x7x7)/Cube 0: Measurement grid: dx=4mm, dy=4mm, dz=1.4mm
Reference Value = 69.11 V/m; Power Drift = -0.16 dB
Peak SAR (extrapolated) = 35.7 W/kg
SAR(1 g) = 7.83 W/kg; SAR(10 g) = 2.15 W/kg
Maximum value of SAR (measured) = 20.0 W/kg

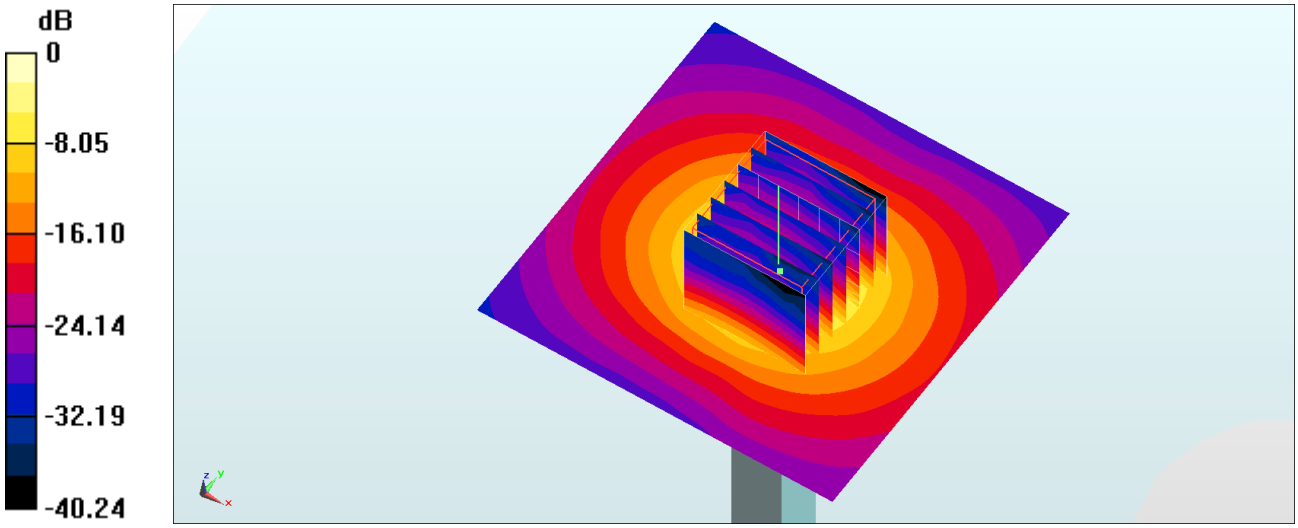

0 dB = 19.2 W/kg = 12.83 dBW/kg