Test Laboratory: Sporton International Inc. SAR/HAC Testing Lab Date: 6/7/2019

System Check_Head_750MHz

DUT: D750V3-1012

Communication System: CW; Frequency: 750 MHz;Duty Cycle: 1:1
Medium: HSL_750_190607 Medium parameters used: f = 750 MHz; σ = 0.869 S/m; ε_r = 42.389; ρ = 1000 kg/m^3
Ambient Temperature：23.3 ℃; Liquid Temperature：22.3 ℃

DASY5 Configuration:
- Probe: EX3DV4 - SN3976; ConvF(10.4, 10.4, 10.4) ; Calibrated: 1/29/2019
- Sensor-Surface: 1.4mm (Mechanical Surface Detection)
- Electronics: DAE4 Sn1424; Calibrated: 1/24/2019
- Phantom: Twin-SAM_Right; Type: QD 000 P40 CB; Serial: 1489
- Measurement SW: DASY52, Version 52.10 (1);SEMCAD X Version 14.6.11 (7439)

Pin=250mW/Area Scan (61x61x1): Interpolated grid: dx=1.500 mm, dy=1.500 mm
Maximum value of SAR (interpolated) = 2.70 W/kg

Pin=250mW/Zoom Scan (5x5x7)/Cube 0: Measurement grid: dx=8mm, dy=8mm, dz=5mm
Reference Value = 57.76 V/m; Power Drift = -0.05 dB
Peak SAR (extrapolated) = 3.07 W/kg
SAR(1 g) = 2.12 W/kg; SAR(10 g) = 1.43 W/kg
Maximum value of SAR (measured) = 2.64 W/kg

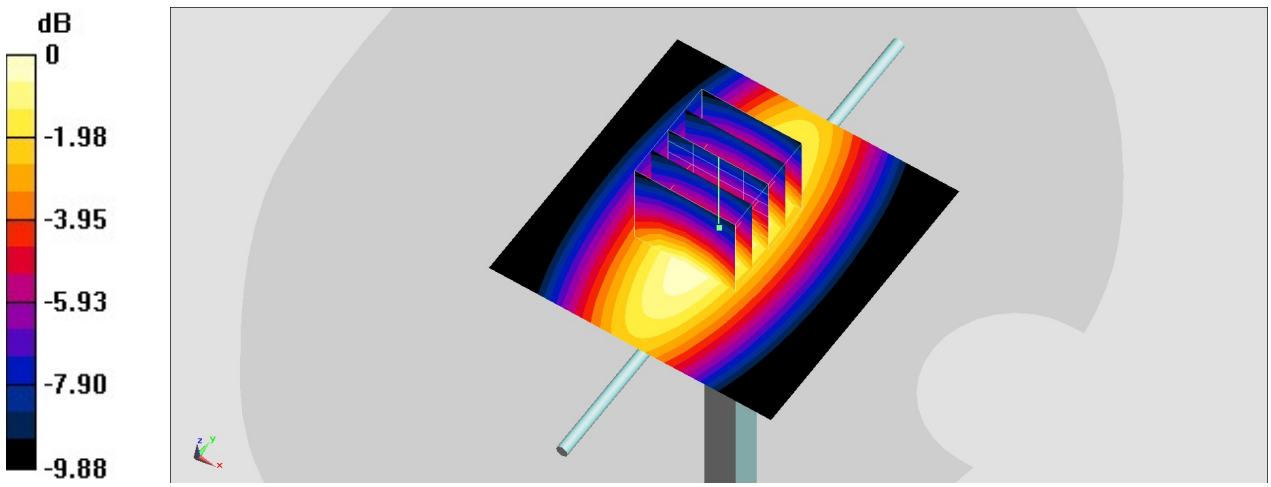

0 dB = 2.64 W/kg = 4.22 dBW/kg

Test Laboratory: Sporton International Inc. SAR/HAC Testing Lab Date: 6/6/2019

System Check_Head_835MHz

DUT: D835V2-499

Communication System: CW ; Frequency: 835 MHz;Duty Cycle: 1:1
Medium: HSL_850_190606 Medium parameters used: f = 835 MHz; σ = 0.906 S/m; ε_r = 43.179; ρ = 1000 kg/m^3
Ambient Temperature：23.3 ℃; Liquid Temperature：22.3 ℃

DASY5 Configuration:
- Probe: EX3DV4 - SN3976; ConvF(10.19, 10.19, 10.19) ; Calibrated: 1/29/2019
- Sensor-Surface: 1.4mm (Mechanical Surface Detection)
- Electronics: DAE4 Sn1424; Calibrated: 1/24/2019
- Phantom: Twin-SAM_Right; Type: QD 000 P40 CB; Serial: 1489
- Measurement SW: DASY52, Version 52.10 (1);SEMCAD X Version 14.6.11 (7439)

Pin=250mW/Area Scan (61x61x1): Interpolated grid: dx=1.500 mm, dy=1.500 mm
Maximum value of SAR (interpolated) = 3.12 W/kg

Pin=250mW/Zoom Scan (5x5x7)/Cube 0: Measurement grid: dx=8mm, dy=8mm, dz=5mm
Reference Value = 59.87 V/m; Power Drift = 0.01 dB
Peak SAR (extrapolated) = 3.57 W/kg
SAR(1 g) = 2.37 W/kg; SAR(10 g) = 1.57 W/kg
Maximum value of SAR (measured) = 3.15 W/kg

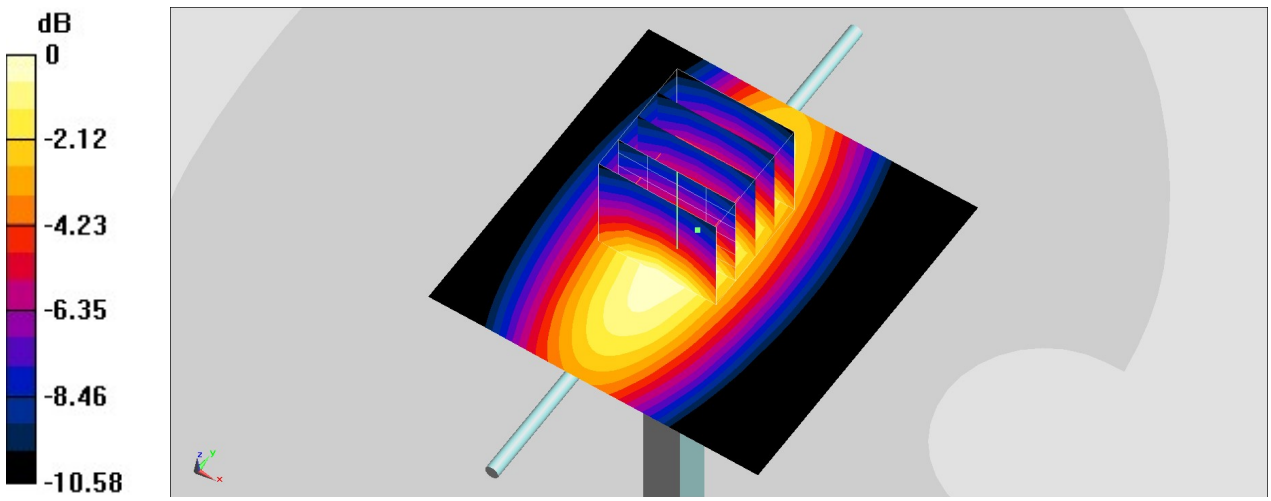

0 dB = 3.15 W/kg = 4.98 dBW/kg

Test Laboratory: Sporton International Inc. SAR/HAC Testing Lab Date: 6/7/2019

System Check_Head_1750MHz

DUT: D1750V2-1068

Communication System: CW; Frequency: 1750 MHz;Duty Cycle: 1:1
Medium: HSL_1750_190607 Medium parameters used: f = 1750 MHz; σ = 1.362 S/m; ε_r = 40.661; ρ = 1000 kg/m^3
Ambient Temperature：23.4 ℃; Liquid Temperature：22.4 ℃

DASY5 Configuration:
- Probe: EX3DV4 - SN3976; ConvF(8.73, 8.73, 8.73) ; Calibrated: 1/29/2019
- Sensor-Surface: 1.4mm (Mechanical Surface Detection)
- Electronics: DAE4 Sn1424; Calibrated: 1/24/2019
- Phantom: Twin-SAM_Right; Type: QD 000 P40 CB; Serial: 1489
- Measurement SW: DASY52, Version 52.10 (1);SEMCAD X Version 14.6.11 (7439)

Pin=250mW/Area Scan (61x61x1): Interpolated grid: dx=1.500 mm, dy=1.500 mm
Maximum value of SAR (interpolated) = 14.4 W/kg

Pin=250mW/Zoom Scan (5x5x7)/Cube 0: Measurement grid: dx=8mm, dy=8mm, dz=5mm
Reference Value = 105.7 V/m; Power Drift = 0.03 dB
Peak SAR (extrapolated) = 17.0 W/kg
SAR(1 g) = 9.33 W/kg; SAR(10 g) = 4.97 W/kg
Maximum value of SAR (measured) = 14.1 W/kg

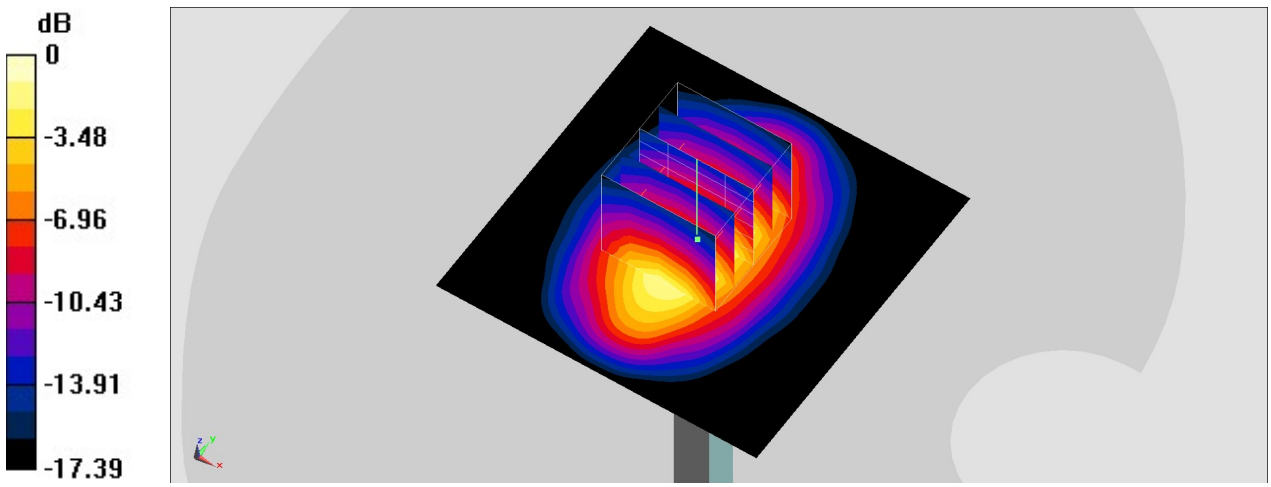

0 dB = 14.1 W/kg = 11.49 dBW/kg

Test Laboratory: Sporton International Inc. SAR/HAC Testing Lab Date: 6/7/2019

System Check_Head_1900MHz

DUT: D1900V2-5d041

Communication System: CW; Frequency: 1900 MHz;Duty Cycle: 1:1
Medium: HSL_1900_190607 Medium parameters used: f = 1900 MHz; σ = 1.445 S/m; ε_r = 38.846; ρ = 1000 kg/m^3
Ambient Temperature：23.4 ℃； Liquid Temperature：22.4 ℃

DASY5 Configuration:
- Probe: EX3DV4 - SN3976; ConvF(8.54, 8.54, 8.54) ; Calibrated: 1/29/2019
- Sensor-Surface: 1.4mm (Mechanical Surface Detection)
- Electronics: DAE4 Sn1424; Calibrated: 1/24/2019
- Phantom: Twin-SAM_Right; Type: QD 000 P40 CB; Serial: 1489
- Measurement SW: DASY52, Version 52.10 (1);SEMCAD X Version 14.6.11 (7439)

Pin=250mW/Area Scan (61x61x1): Interpolated grid: dx=1.500 mm, dy=1.500 mm
Maximum value of SAR (interpolated) = 16.5 W/kg

Pin=250mW/Zoom Scan (5x5x7)/Cube 0: Measurement grid: dx=8mm, dy=8mm, dz=5mm
Reference Value = 109.2 V/m; Power Drift = 0.05 dB
Peak SAR (extrapolated) = 19.9 W/kg
SAR(1 g) = 10.6 W/kg; SAR(10 g) = 5.47 W/kg
Maximum value of SAR (measured) = 16.7 W/kg

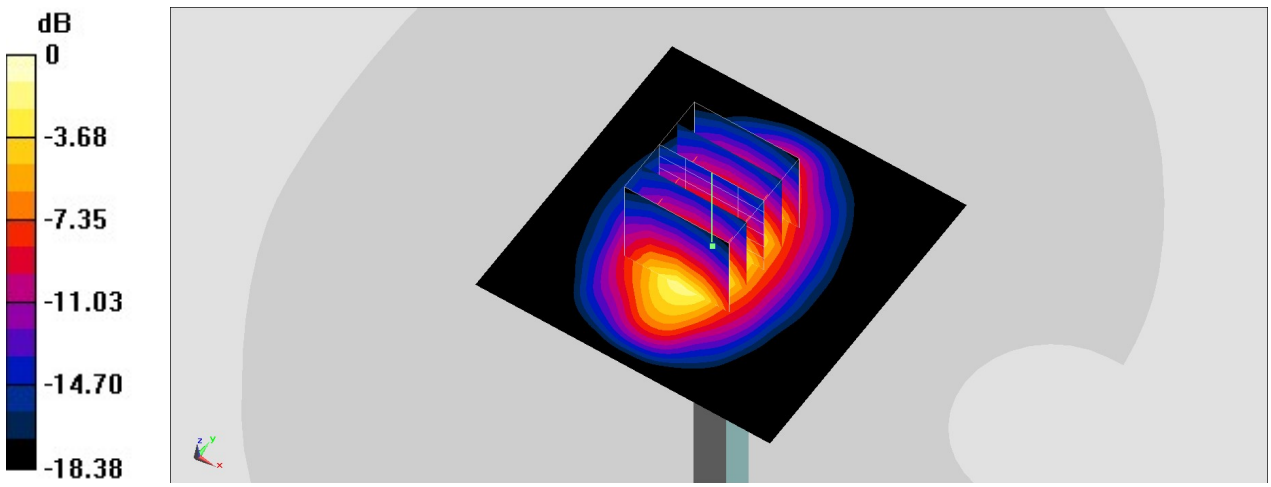

0 dB = 16.7 W/kg = 12.23 dBW/kg

Test Laboratory: Sporton International Inc. SAR/HAC Testing Lab Date: 6/9/2019

System Check_Head_2450MHz

DUT: D2450V2-736

Communication System: CW; Frequency: 2450 MHz;Duty Cycle: 1:1
Medium: HSL_2450_190609 Medium parameters used: f = 2450 MHz; σ = 1.801 S/m; ε_r = 39.257; ρ = 1000 kg/m^3
Ambient Temperature：23.6 ℃; Liquid Temperature：22.6 ℃

DASY5 Configuration:
- Probe: EX3DV4 - SN3976; ConvF(7.7, 7.7, 7.7) ; Calibrated: 1/29/2019
- Sensor-Surface: 1.4mm (Mechanical Surface Detection)
- Electronics: DAE4 Sn1424; Calibrated: 1/24/2019
- Phantom: Twin-SAM_Right; Type: QD 000 P40 CB; Serial: 1489
- Measurement SW: DASY52, Version 52.10 (1);SEMCAD X Version 14.6.11 (7439)

Pin=250mW/Area Scan (61x61x1): Interpolated grid: dx=1.200 mm, dy=1.200 mm
Maximum value of SAR (interpolated) = 18.5 W/kg

Pin=250mW/Zoom Scan (7x7x7)/Cube 0: Measurement grid: dx=5mm, dy=5mm, dz=5mm
Reference Value = 103.0 V/m; Power Drift = 0.01 dB
Peak SAR (extrapolated) = 24.7 W/kg
SAR(1 g) = 12.1 W/kg; SAR(10 g) = 5.6 W/kg
Maximum value of SAR (measured) = 18.5 W/kg

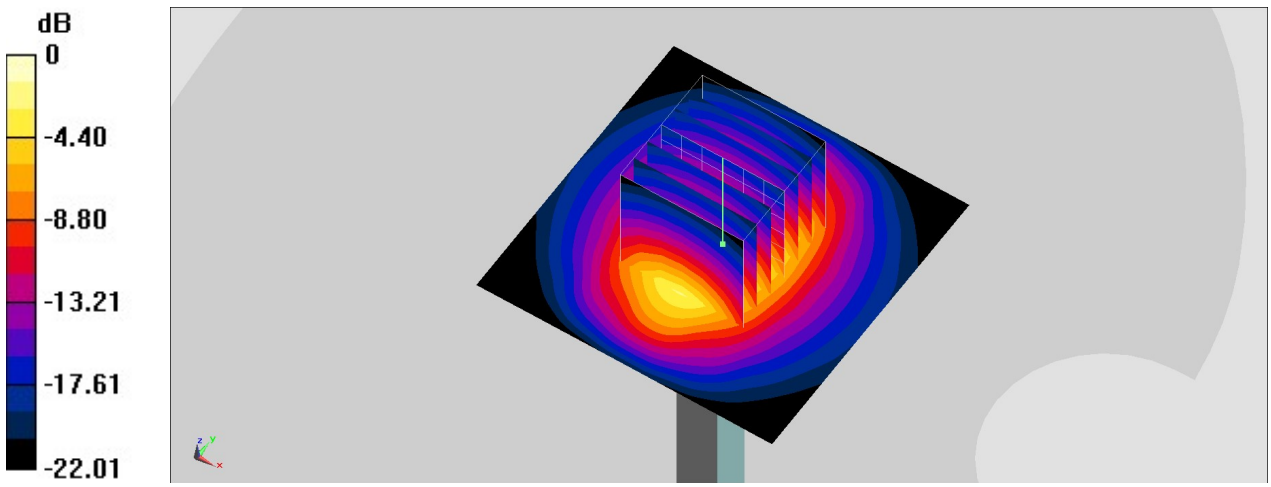

0 dB = 18.5 W/kg = 12.67 dBW/kg

System Check_Head_2450MHz

DUT: D2450V2-736

Communication System: CW; Frequency: 2450 MHz;Duty Cycle: 1:1
Medium: HSL_2450_190610 Medium parameters used : f = 2450 MHz; σ = 1.811 S/m; ε_r = 38.658; ρ = 1000 kg/m^3
Ambient Temperature：23.5 ℃; Liquid Temperature：22.5 ℃

DASY5 Configuration
- Probe: EX3DV4 - SN3728;ConvF(7.11, 7.11, 7.11) ;Calibrated: 2019/1/15
- Sensor-Surface: 1.4mm (Mechanical Surface Detection)
- Electronics: DAE4 Sn853; Calibrated: 2018/7/24
- Phantom: SAM_Left; Type: QD000P40CD; Serial: S/N:1801
- Measurement SW: DASY52, Version 52.10 (1); SEMCAD X Version 14.6.11 (7439)

Pin=250mW/Area Scan (71x71x1): Interpolated grid: dx=1.200 mm, dy=1.200 mm
Maximum value of SAR (interpolated) = 22.5 W/kg

Pin=250mW/Zoom Scan (7x7x7)/Cube 0: Measurement grid: dx=5mm, dy=5mm, dz=5mm
Reference Value = 114.8 V/m; Power Drift = -0.04 dB
Peak SAR (extrapolated) = 27.3 W/kg
SAR(1 g) = 13.2 W/kg; SAR(10 g) = 6.17 W/kg
Maximum value of SAR (measured) = 22.2 W/kg

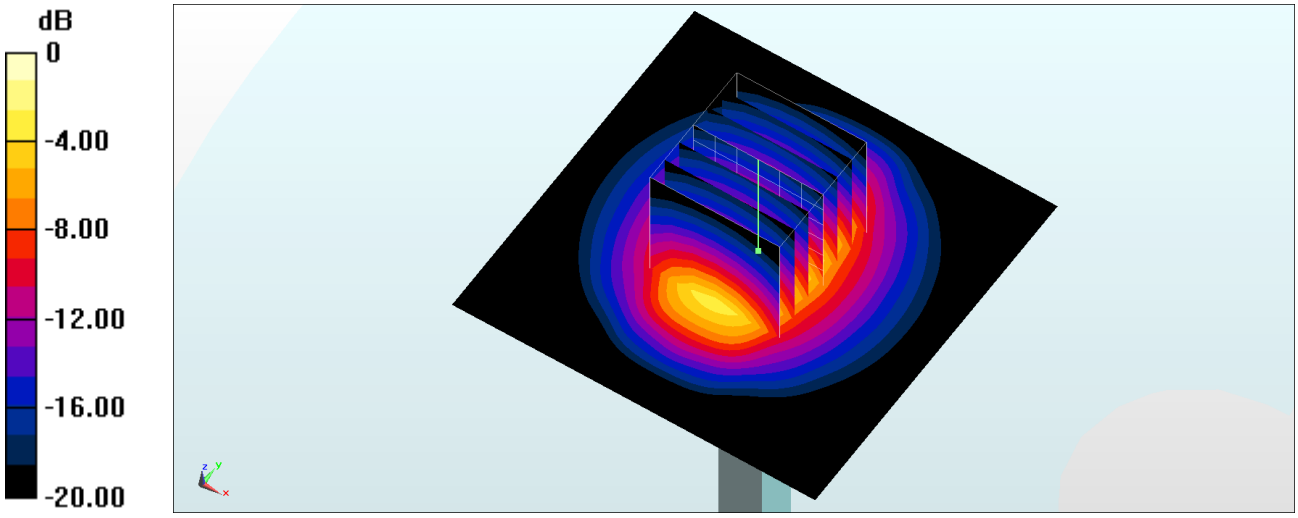

0 dB = 22.2 W/kg = 13.46 dBW/kg

Test Laboratory: Sporton International Inc. SAR/HAC Testing Lab Date: 6/9/2019

System Check_Head_2600MHz

DUT: D2600V2-1078

Communication System: CW; Frequency: 2600 MHz;Duty Cycle: 1:1
Medium: HSL_2600_190609 Medium parameters used: f = 2600 MHz; σ = 1.93 S/m; ε_r = 39.134; ρ = 1000 kg/m^3
Ambient Temperature：23.6 ℃； Liquid Temperature：22.6 ℃

DASY5 Configuration:
- Probe: EX3DV4 - SN3976; ConvF(7.54, 7.54, 7.54) ; Calibrated: 1/29/2019
- Sensor-Surface: 1.4mm (Mechanical Surface Detection)
- Electronics: DAE4 Sn1424; Calibrated: 1/24/2019
- Phantom: Twin-SAM_Right; Type: QD 000 P40 CB; Serial: 1489
- Measurement SW: DASY52, Version 52.10 (1);SEMCAD X Version 14.6.11 (7439)

Pin=250mW/Area Scan (61x61x1): Interpolated grid: dx=1.200 mm, dy=1.200 mm
Maximum value of SAR (interpolated) = 25.4 W/kg

Pin=250mW/Zoom Scan (7x7x7)/Cube 0: Measurement grid: dx=5mm, dy=5mm, dz=5mm
Reference Value = 117.6 V/m; Power Drift = -0.01 dB
Peak SAR (extrapolated) = 31.7 W/kg
SAR(1 g) = 14.3 W/kg; SAR(10 g) = 6.3 W/kg
Maximum value of SAR (measured) = 25.1 W/kg

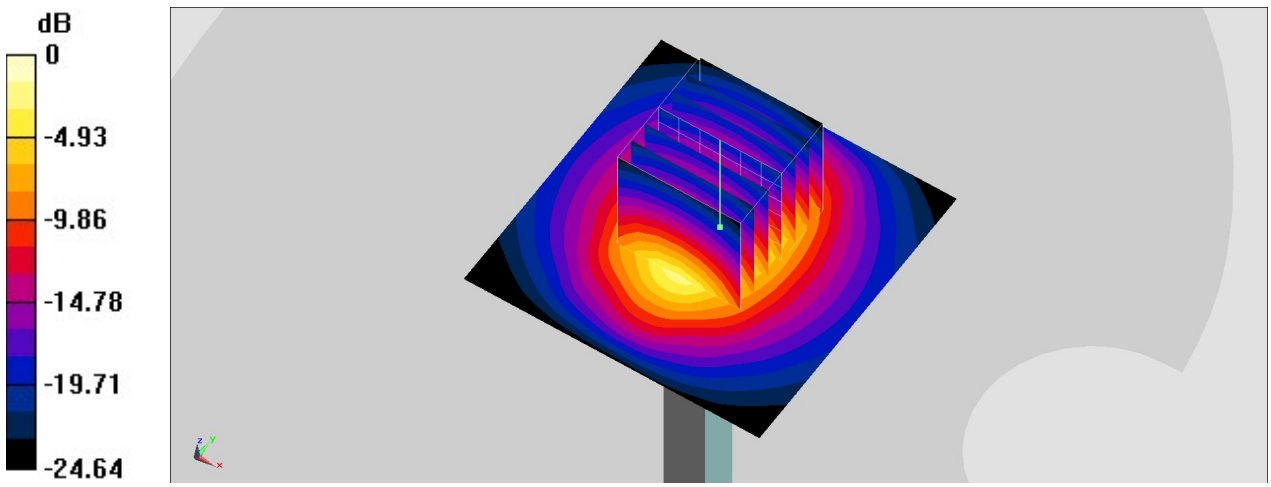

0 dB = 25.1 W/kg = 14.00 dBW/kg

Test Laboratory: Sporton International Inc. SAR/HAC Testing Lab Date: 2019/6/6

System Check_Head_5250MHz

DUT: D5GHzV2-1006

Communication System: CW; Frequency: 5250 MHz;Duty Cycle: 1:1
Medium: HSL_5G_190606 Medium parameters used : f = 5250 MHz; σ = 4.683 S/m; ε_r = 36.161; ρ = 1000 kg/m^3
Ambient Temperature：23.2 ℃; Liquid Temperature：22.2 ℃

DASY5 Configuration
- Probe: EX3DV4 - SN3642;ConvF(4.54, 4.54, 4.54) ;Calibrated: 2019/4/29
- Sensor-Surface: 1.4mm (Mechanical Surface Detection)
- Electronics: DAE4 Sn1326; Calibrated: 2018/9/18
- Phantom: Twin-SAM V5.0 (30deg probe tilt); Type: QD 000 P40 CD; Serial: 1885
- Measurement SW: DASY52, Version 52.10 (2); SEMCAD X Version 14.6.12 (7450)

Pin=100mW/Area Scan (71x71x1): Interpolated grid: dx=1.000 mm, dy=1.000 mm
Maximum value of SAR (interpolated) = 19.6 W/kg

Pin=100mW/Zoom Scan (7x7x7)/Cube 0: Measurement grid: dx=4mm, dy=4mm, dz=1.4mm
Reference Value = 69.00 V/m; Power Drift = 0.05 dB
Peak SAR (extrapolated) = 33.5 W/kg
SAR(1 g) = 8.22 W/kg; SAR(10 g) = 2.23 W/kg
Maximum value of SAR (measured) = 20.6 W/kg

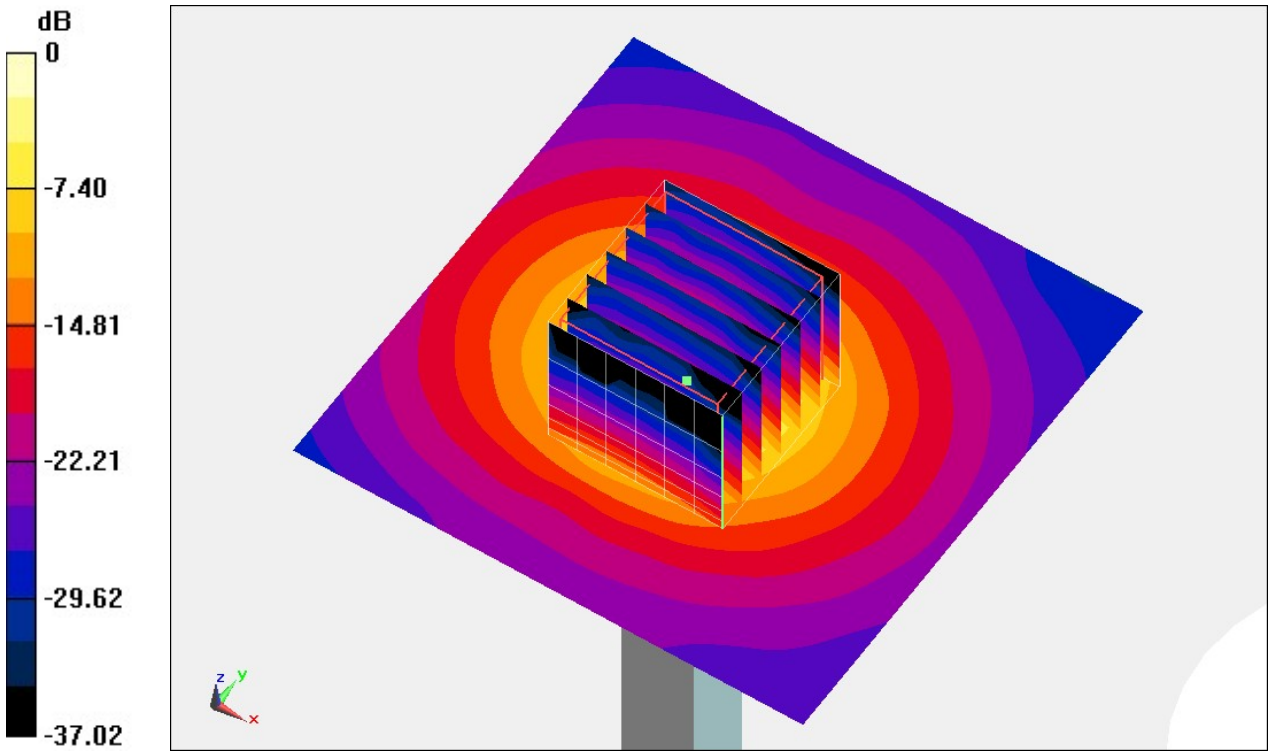

0 dB = 20.6 W/kg = 13.14 dBW/kg

System Check_Head_5250MHz

DUT: D5GHzV2-1006

Communication System: CW; Frequency: 5250 MHz;Duty Cycle: 1:1
Medium: HSL_5G_190606 Medium parameters used : f = 5250 MHz; σ = 4.551 S/m; ε_r = 36.665; ρ = 1000 kg/m^3
Ambient Temperature：23.3 ℃; Liquid Temperature：22.3 ℃

DASY5 Configuration
- Probe: EX3DV4 - SN3728;ConvF(4.77, 4.77, 4.77) ;Calibrated: 2019/1/15
- Sensor-Surface: 1.4mm (Mechanical Surface Detection)
- Electronics: DAE4 Sn853; Calibrated: 2018/7/24
- Phantom: SAM_Left; Type: QD000P40CD; Serial: S/N:1801
- Measurement SW: DASY52, Version 52.10 (1); SEMCAD X Version 14.6.11 (7439)

Pin=100mW/Area Scan (71x71x1): Interpolated grid: dx=1.000 mm, dy=1.000 mm
Maximum value of SAR (interpolated) = 20.0 W/kg

Pin=100mW/Zoom Scan (7x7x7)/Cube 0: Measurement grid: dx=4mm, dy=4mm, dz=1.4mm
Reference Value = 72.67 V/m; Power Drift = 0.07 dB
Peak SAR (extrapolated) = 32.4 W/kg
SAR(1 g) = 8.25 W/kg; SAR(10 g) = 2.32 W/kg
Maximum value of SAR (measured) = 20.0 W/kg

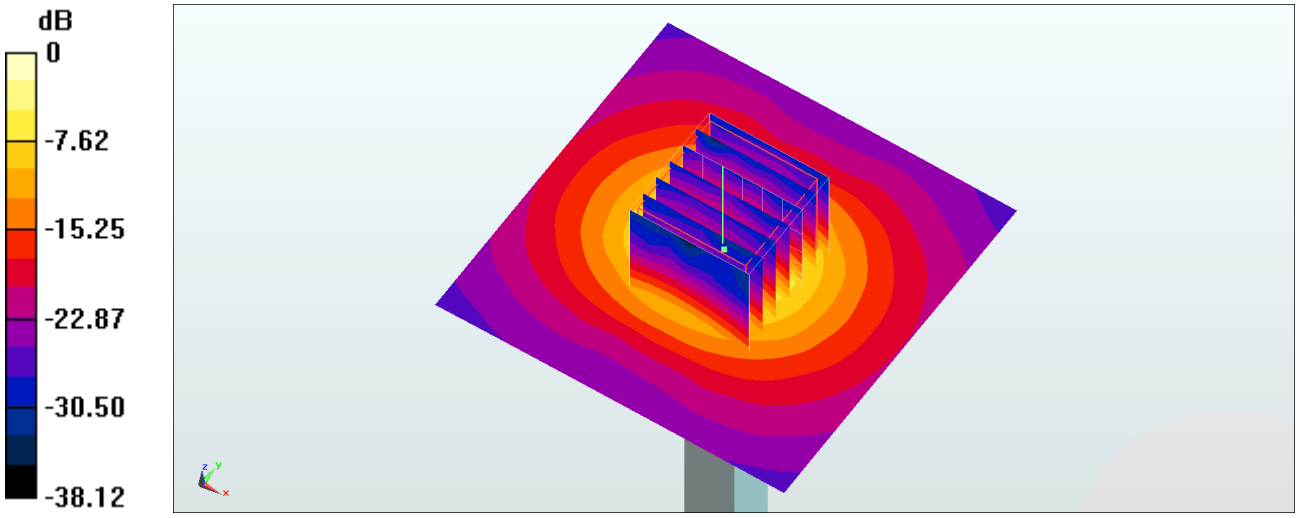

0 dB = 20.0 W/kg = 13.01 dBW/kg

System Check_Head_5250MHz

DUT: D5GHzV2-1006

Communication System: CW; Frequency: 5250 MHz;Duty Cycle: 1:1
Medium: HSL_5G_190620 Medium parameters used : f = 5250 MHz; σ = 4.685 S/m; ε_r = 36.693; ρ = 1000 kg/m^3
Ambient Temperature：23.4 ℃; Liquid Temperature：22.4 ℃

DASY5 Configuration:
- Probe: EX3DV4 - SN3728; ConvF(4.77, 4.77, 4.77) ; Calibrated: 2019/1/15
- Sensor-Surface: 1.4mm (Mechanical Surface Detection)
- Electronics: DAE4 Sn853; Calibrated: 2018/7/24
- Phantom: SAM_Left; Type: QD000P40CD; Serial: S/N:1801
- Measurement SW: DASY52, Version 52.10 (2);SEMCAD X Version 14.6.12 (7470)

Pin=100mW/Area Scan (71x71x1): Interpolated grid: dx=1.000 mm, dy=1.000 mm
Maximum value of SAR (interpolated) = 19.0 W/kg

Pin=100mW/Zoom Scan (7x7x7)/Cube 0: Measurement grid: dx=4mm, dy=4mm, dz=1.4mm
Reference Value = 55.02 V/m; Power Drift = 0.16 dB
Peak SAR (extrapolated) = 31.9 W/kg
SAR(1 g) = 7.69 W/kg; SAR(10 g) = 2.19 W/kg
Maximum value of SAR (measured) = 19.7 W/kg

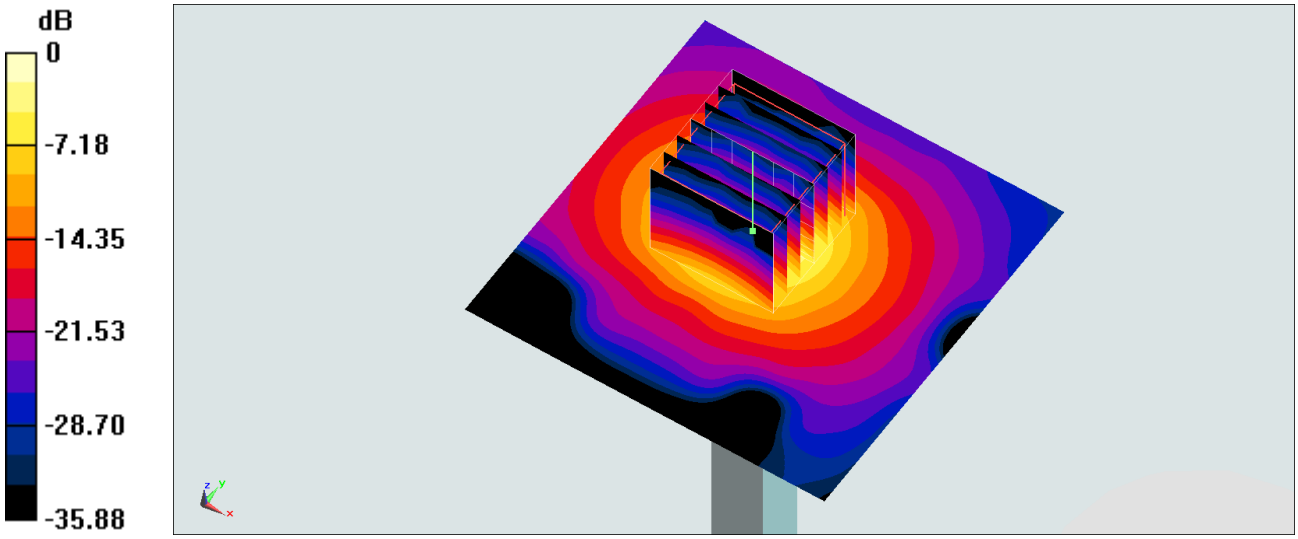

0 dB = 19.7 W/kg = 12.94 dBW/kg

Test Laboratory: Sporton International Inc. SAR/HAC Testing Lab Date: 2019/6/6

System Check_Head_5600MHz

DUT: D5GHzV2-1006

Communication System: CW; Frequency: 5600 MHz;Duty Cycle: 1:1
Medium: HSL_5G_190606 Medium parameters used: f = 5600 MHz; σ = 5.031 S/m; ε_r = 35.69; ρ = 1000 kg/m^3
Ambient Temperature：23.2 ℃; Liquid Temperature：22.2 ℃

DASY5 Configuration
- Probe: EX3DV4 - SN3642;ConvF(4.28, 4.28, 4.28) ;Calibrated: 2019/4/29
- Sensor-Surface: 1.4mm (Mechanical Surface Detection)
- Electronics: DAE4 Sn1326; Calibrated: 2018/9/18
- Phantom: Twin-SAM V5.0 (30deg probe tilt); Type: QD 000 P40 CD; Serial: 1885
- Measurement SW: DASY52, Version 52.10 (2); SEMCAD X Version 14.6.12 (7450)

Pin=100mW/Area Scan (71x71x1): Interpolated grid: dx=1.000 mm, dy=1.000 mm
Maximum value of SAR (interpolated) = 20.7 W/kg

Pin=100mW/Zoom Scan (7x7x7)/Cube 0: Measurement grid: dx=4mm, dy=4mm, dz=1.4mm
Reference Value = 67.84 V/m; Power Drift = 0.08 dB
Peak SAR (extrapolated) = 36.6 W/kg
SAR(1 g) = 8.29 W/kg; SAR(10 g) = 2.26 W/kg
Maximum value of SAR (measured) = 20.9 W/kg

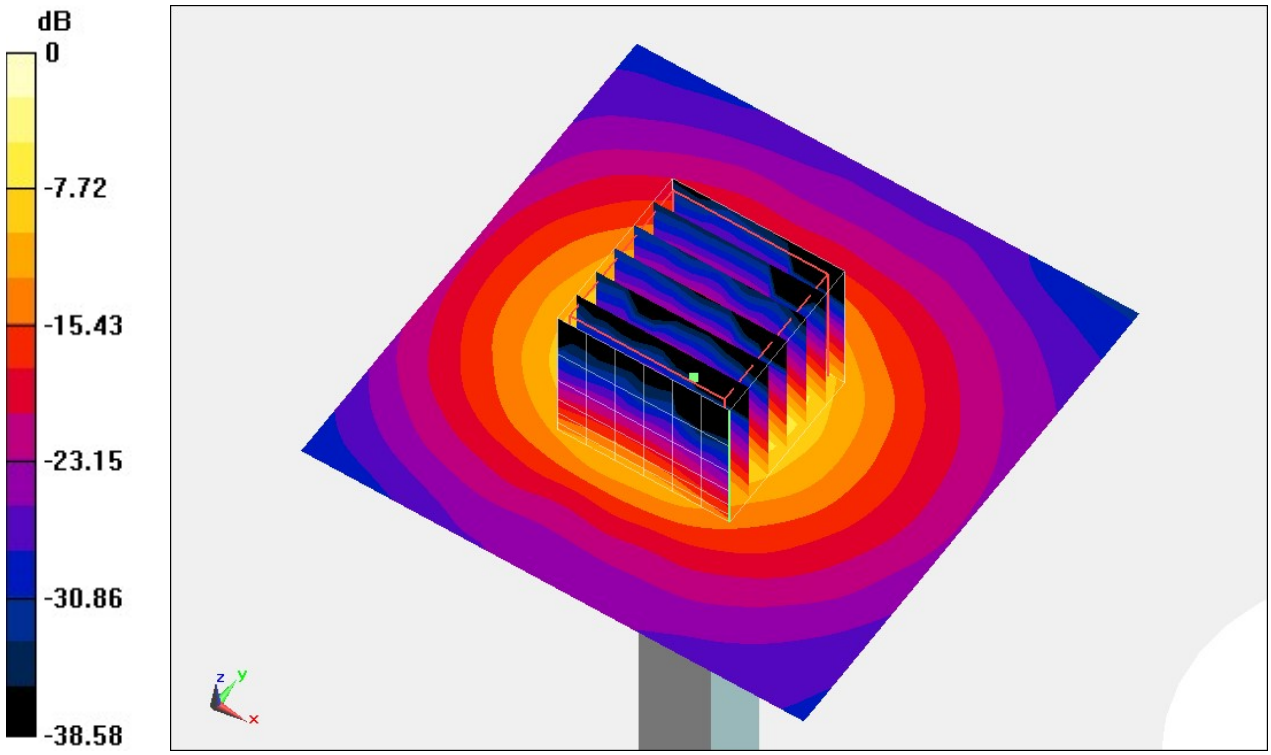

0 dB = 20.9 W/kg = 13.20 dBW/kg

System Check_Head_5600MHz

DUT: D5GHzV2-1006

Communication System: CW; Frequency: 5600 MHz;Duty Cycle: 1:1
Medium: HSL_5G_190607 Medium parameters used: f = 5600 MHz; σ = 4.839 S/m; ε_r = 36.587; ρ = 1000 kg/m^3
Ambient Temperature：23.7 ℃; Liquid Temperature：22.7 ℃

DASY5 Configuration
- Probe: EX3DV4 - SN3728;ConvF(4.2, 4.2, 4.2) ;Calibrated: 2019/1/15
- Sensor-Surface: 1.4mm (Mechanical Surface Detection)
- Electronics: DAE4 Sn853; Calibrated: 2018/7/24
- Phantom: SAM_Left; Type: QD000P40CD; Serial: S/N:1801
- Measurement SW: DASY52, Version 52.10 (1); SEMCAD X Version 14.6.11 (7439)

Pin=100mW/Area Scan (71x71x1): Interpolated grid: dx=1.000 mm, dy=1.000 mm
Maximum value of SAR (interpolated) = 22.4 W/kg

Pin=100mW/Zoom Scan (7x7x7)/Cube 0: Measurement grid: dx=4mm, dy=4mm, dz=1.4mm
Reference Value = 73.76 V/m; Power Drift = 0.05 dB
Peak SAR (extrapolated) = 36.7 W/kg
SAR(1 g) = 8.74 W/kg; SAR(10 g) = 2.47 W/kg
Maximum value of SAR (measured) = 21.4 W/kg

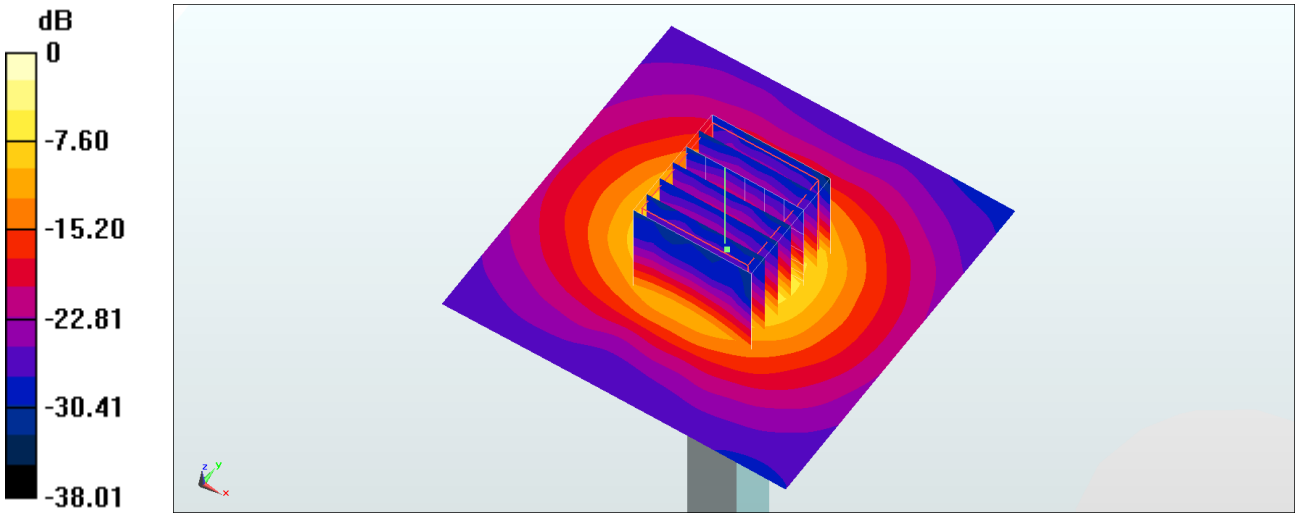

0 dB = 21.4 W/kg = 13.30 dBW/kg

Test Laboratory: Sporton International Inc. SAR/HAC Testing Lab Date: 2019/6/6

System Check_Head_5750MHz

DUT: D5GHzV2-1006

Communication System: CW; Frequency: 5750 MHz;Duty Cycle: 1:1
Medium: HSL_5G_190606 Medium parameters used: f = 5750 MHz; σ = 5.189 S/m; ε_r = 35.479; ρ = 1000 kg/m^3
Ambient Temperature：23.2 ℃; Liquid Temperature：22.2 ℃

DASY5 Configuration
- Probe: EX3DV4 - SN3642;ConvF(4.36, 4.36, 4.36) ;Calibrated: 2019/4/29
- Sensor-Surface: 1.4mm (Mechanical Surface Detection)
- Electronics: DAE4 Sn1326; Calibrated: 2018/9/18
- Phantom: Twin-SAM V5.0 (30deg probe tilt); Type: QD 000 P40 CD; Serial: 1885
- Measurement SW: DASY52, Version 52.10 (2); SEMCAD X Version 14.6.12 (7450)

Pin=100mW/Area Scan (71x71x1): Interpolated grid: dx=1.000 mm, dy=1.000 mm
Maximum value of SAR (interpolated) = 19.8 W/kg

Pin=100mW/Zoom Scan (8x8x7)/Cube 0: Measurement grid: dx=4mm, dy=4mm, dz=1.4mm
Reference Value = 65.48 V/m; Power Drift = 0.03 dB
Peak SAR (extrapolated) = 35.7 W/kg
SAR(1 g) = 7.86 W/kg; SAR(10 g) = 2.22 W/kg
Maximum value of SAR (measured) = 19.9 W/kg

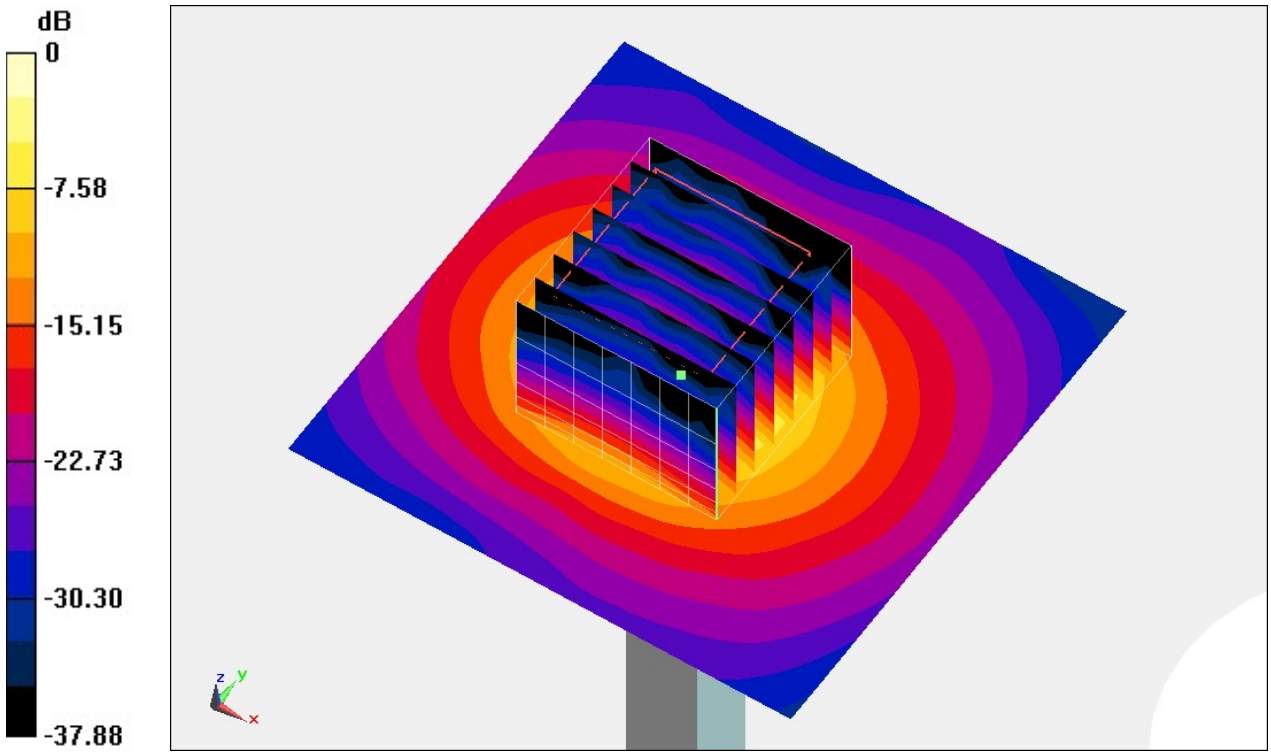

0 dB = 19.9 W/kg = 12.99 dBW/kg

System Check_Head_5750MHz

DUT: D5GHzV2-1006

Communication System: CW; Frequency: 5750 MHz;Duty Cycle: 1:1
Medium: HSL_5G_190607 Medium parameters used: f = 5750 MHz; σ = 5.009 S/m; ε_r = 36.423; ρ = 1000 kg/m^3
Ambient Temperature：23.7 ℃; Liquid Temperature：22.7 ℃

DASY5 Configuration
- Probe: EX3DV4 - SN3728;ConvF(4.26, 4.26, 4.26) ;Calibrated: 2019/1/15
- Sensor-Surface: 1.4mm (Mechanical Surface Detection)
- Electronics: DAE4 Sn853; Calibrated: 2018/7/24
- Phantom: SAM_Left; Type: QD000P40CD; Serial: S/N:1801
- Measurement SW: DASY52, Version 52.10 (1); SEMCAD X Version 14.6.11 (7439)

Pin=100mW/Area Scan (71x71x1): Interpolated grid: dx=1.000 mm, dy=1.000 mm
Maximum value of SAR (interpolated) = 20.8 W/kg

Pin=100mW/Zoom Scan (8x8x7)/Cube 0: Measurement grid: dx=4mm, dy=4mm, dz=1.4mm
Reference Value = 70.32 V/m; Power Drift = 0.03 dB
Peak SAR (extrapolated) = 35.7 W/kg
SAR(1 g) = 8.17 W/kg; SAR(10 g) = 2.35 W/kg
Maximum value of SAR (measured) = 21.4 W/kg

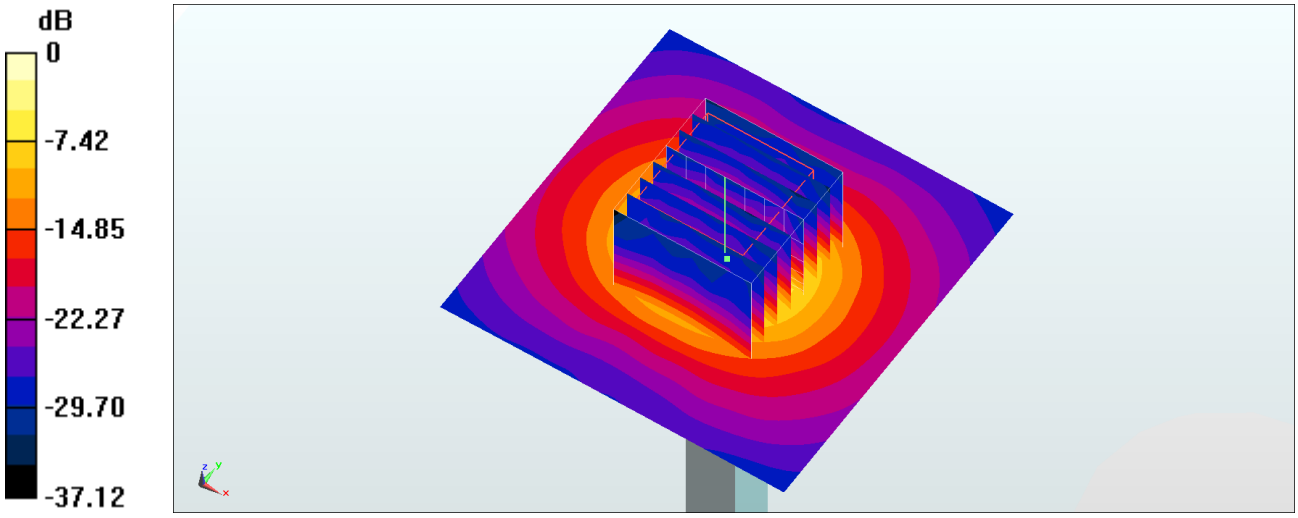

0 dB = 21.4 W/kg = 13.30 dBW/kg