Test Laboratory: Sporton International Inc. SAR/HAC Testing Lab Date: 2016/12/13

System Check_Head_750MHz

DUT: D750V3-1012

Communication System: CW; Frequency: 750 MHz;Duty Cycle: 1:1
Medium: HSL_750_161213 Medium parameters used: f = 750 MHz; σ = 0.889 mho/m; ε_r = 43.4; ρ = 1000 kg/m^3
Ambient Temperature：23.9 ℃； Liquid Temperature：22.9 ℃

DASY4 Configuration:
- Probe: EX3DV4 - SN3898; ConvF(10.43, 10.43, 10.43); Calibrated: 2016/7/11
- Sensor-Surface: 1.4mm (Mechanical Surface Detection)
- Electronics: DAE4 Sn1388; Calibrated: 2016/10/10
- Phantom: SAM_Right; Type: QD000P40CD; Serial: TP:1383
- ;Postprocessing SW: SEMCAD, V1.8 Build 159

Pin=250mW/Area Scan (61x61x1): Measurement grid: dx=15mm, dy=15mm
Maximum value of SAR (interpolated) = 2.78 mW/g

Pin=250mW/Zoom Scan (5x5x7)/Cube 0: Measurement grid: dx=8mm, dy=8mm, dz=5mm
Reference Value = 58.3 V/m; Power Drift = 0.019 dB
Peak SAR (extrapolated) = 3.04 W/kg
SAR(1 g) = 2.15 mW/g; SAR(10 g) = 1.46 mW/g
Maximum value of SAR (measured) = 2.75 mW/g

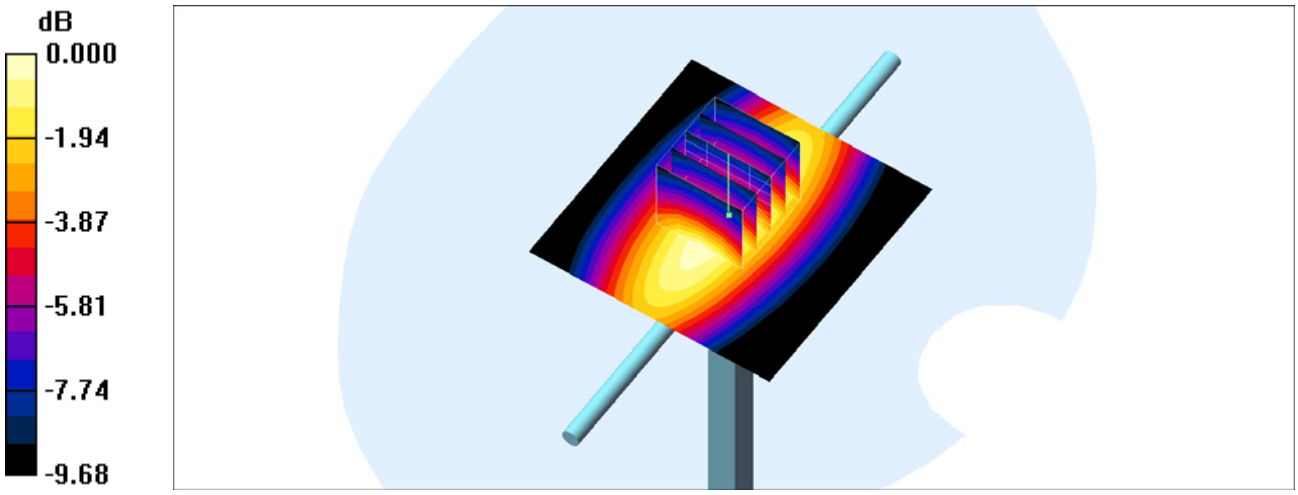

0 dB = 2.75mW/g

System Check_Body_750MHz

DUT: D750V3-1012

Communication System: CW; Frequency: 750 MHz;Duty Cycle: 1:1
Medium: MSL_750_161220 Medium parameters used: f = 750 MHz; σ = 0.961 S/m; ε_r = 55.023; ρ = 1000 kg/m^3
Ambient Temperature：23.6 ℃; Liquid Temperature：22.6 ℃

DASY5 Configuration:
- Probe: ES3DV3 - SN3270; ConvF(6.09, 6.09, 6.09); Calibrated: 2016/8/26;
- Sensor-Surface: 3mm (Mechanical Surface Detection)
- Electronics: DAE4 Sn778; Calibrated: 2016/5/12
- Phantom: SAM-Right; Type: SAM; Serial: 1795
- Measurement SW: DASY52, Version 52.8 (8);SEMCAD X Version 14.6.10 (7331)

Pin=250mW/Area Scan (61x61x1): Interpolated grid: dx=1.500 mm, dy=1.500 mm
Maximum value of SAR (interpolated) = 2.82 W/kg

Pin=250mW/Zoom Scan (5x5x7)/Cube 0: Measurement grid: dx=8mm, dy=8mm, dz=5mm
Reference Value = 55.64 V/m; Power Drift = -0.05 dB
Peak SAR (extrapolated) = 3.31 W/kg
SAR(1 g) = 2.3 W/kg; SAR(10 g) = 1.55 W/kg
Maximum value of SAR (measured) = 2.65 W/kg

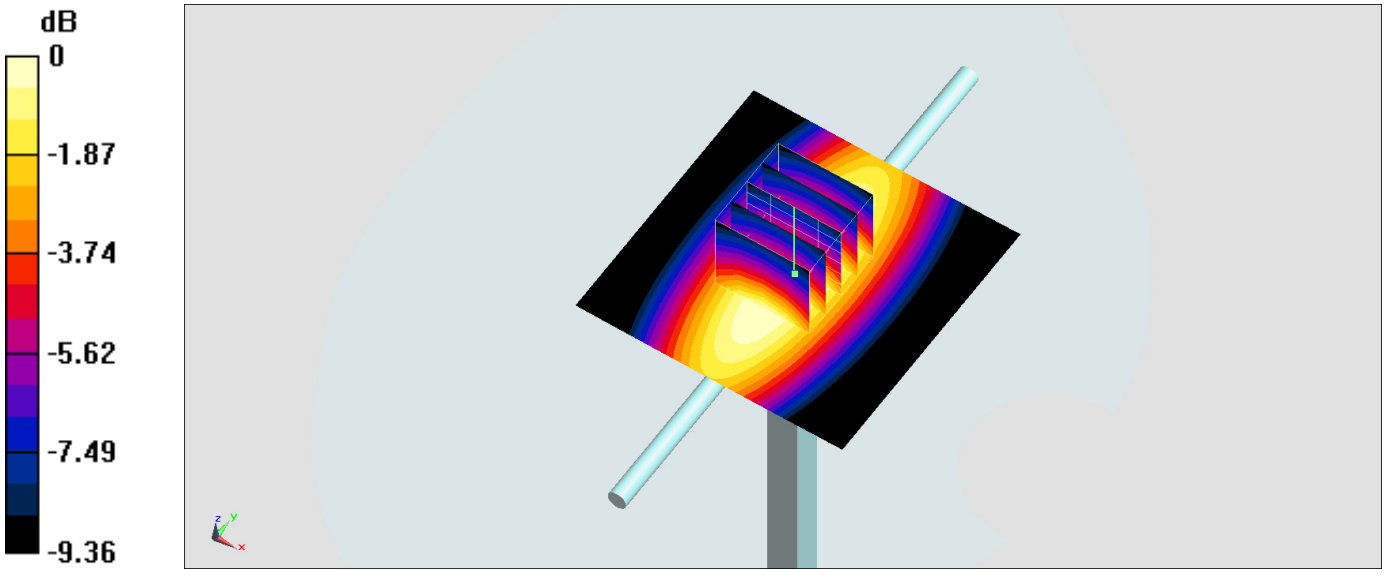

0 dB = 2.65 W/kg = 4.23 dBW/kg

Test Laboratory: Sporton International Inc. SAR/HAC Testing Lab Date: 2016/12/14

System Check_Head_850MHz

DUT: D835V2-499

Communication System: CW; Frequency: 835 MHz;Duty Cycle: 1:1
Medium: HSL_850_161214 Medium parameters used: f = 835 MHz; σ = 0.87 mho/m; ε_r = 41.9; ρ = 1000 kg/m^3
Ambient Temperature：23.2 ℃； Liquid Temperature：22.2 ℃

DASY4 Configuration:
- Probe: EX3DV4 - SN3898; ConvF(9.92, 9.92, 9.92); Calibrated: 2016/7/11
- Sensor-Surface: 1.4mm (Mechanical Surface Detection)
- Electronics: DAE4 Sn1388; Calibrated: 2016/10/10
- Phantom: SAM_Right; Type: QD000P40CD; Serial: TP:1383
- ;Postprocessing SW: SEMCAD, V1.8 Build 159

Pin=250mW/Area Scan (61x61x1): Measurement grid: dx=15mm, dy=15mm
Maximum value of SAR (interpolated) = 3.09 mW/g

Pin=250mW/Zoom Scan (5x5x7)/Cube 0: Measurement grid: dx=8mm, dy=8mm, dz=5mm
Reference Value = 62.9 V/m; Power Drift = -0.096 dB
Peak SAR (extrapolated) = 3.41 W/kg
SAR(1 g) = 2.34 mW/g; SAR(10 g) = 1.56 mW/g
Maximum value of SAR (measured) = 3.05 mW/g

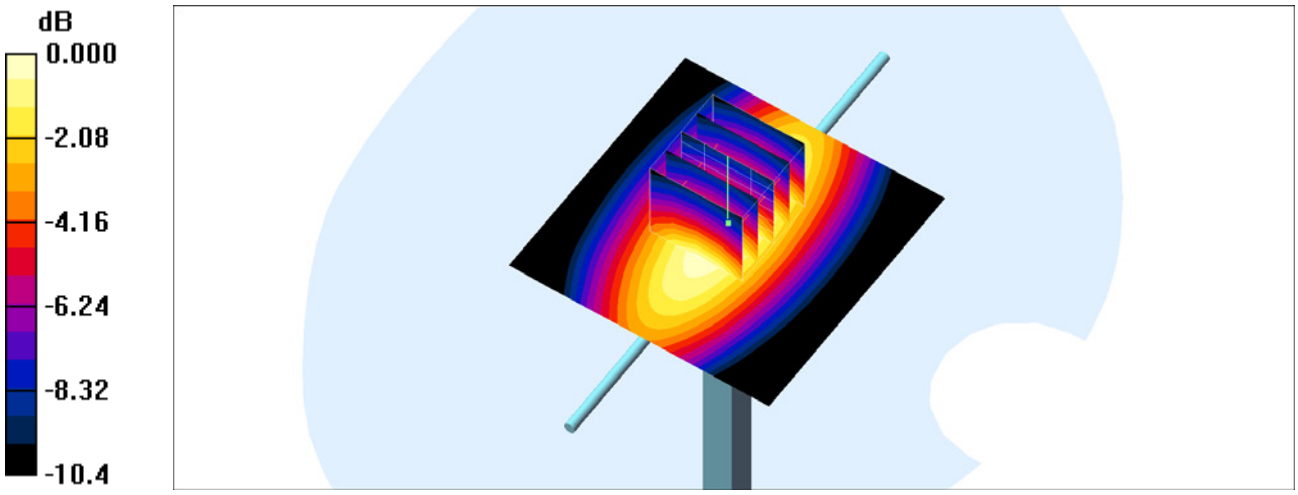

0 dB = 3.05mW/g

System Check_Body_835MHz

DUT: D835V2-499

Communication System: CW; Frequency: 835 MHz;Duty Cycle: 1:1
Medium: MSL_850_161219 Medium parameters used: f = 835 MHz; σ = 0.96 S/m; ε_r = 54.952; ρ = 1000 kg/m^3
Ambient Temperature：23.4 ℃; Liquid Temperature：22.4 ℃

DASY5 Configuration:
- Probe: ES3DV3 - SN3270; ConvF(6.01, 6.01, 6.01); Calibrated: 2016/8/26;
- Sensor-Surface: 3mm (Mechanical Surface Detection)
- Electronics: DAE4 Sn778; Calibrated: 2016/5/12
- Phantom: SAM-Right; Type: SAM; Serial: 1795
- Measurement SW: DASY52, Version 52.8 (8);SEMCAD X Version 14.6.10 (7331)

Pin=250mW/Area Scan (61x61x1): Interpolated grid: dx=1.500 mm, dy=1.500 mm
Maximum value of SAR (interpolated) = 2.80 W/kg

Pin=250mW/Zoom Scan (5x5x7)/Cube 0: Measurement grid: dx=8mm, dy=8mm, dz=5mm
Reference Value = 56.06 V/m; Power Drift = -0.01 dB
Peak SAR (extrapolated) = 3.45 W/kg
SAR(1 g) = 2.43 W/kg; SAR(10 g) = 1.65 W/kg
Maximum value of SAR (measured) = 2.81 W/kg

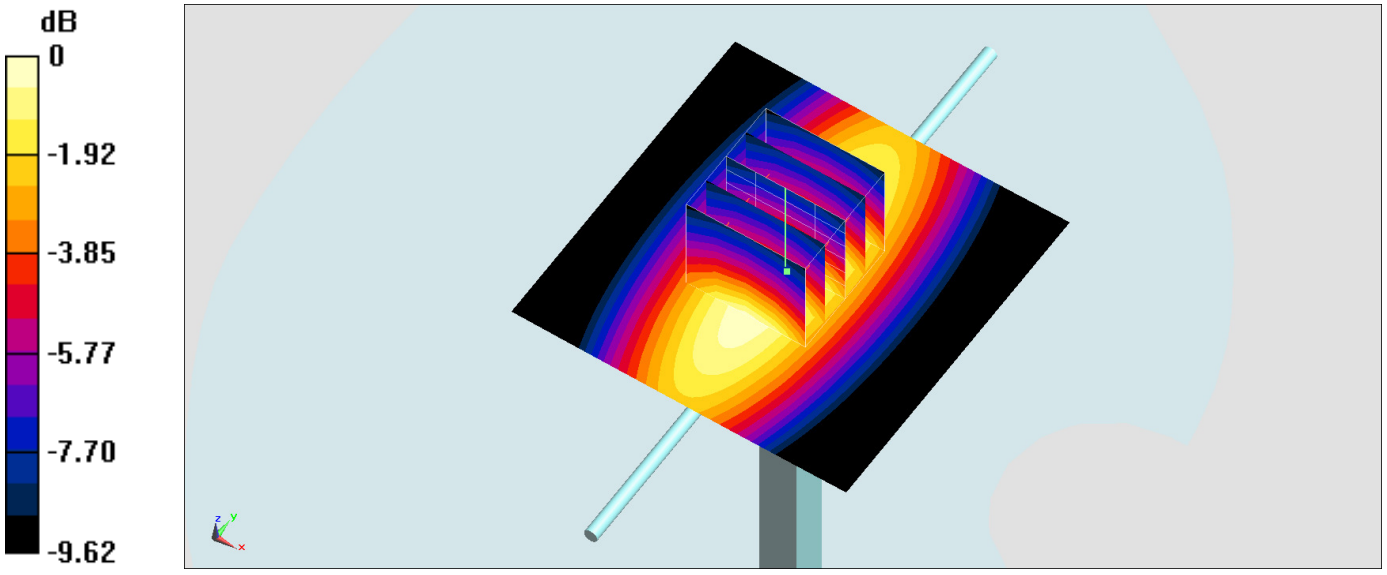

0 dB = 2.81 W/kg = 4.49 dBW/kg

System Check_Head_1750MHz

DUT: D1750V2-1068

Communication System: CW; Frequency: 1750 MHz;Duty Cycle: 1:1
Medium: HSL_1750_161215 Medium parameters used: f = 1750 MHz; σ = 1.401 S/m; ε_r = 41.028; ρ = 1000 kg/m^3
Ambient Temperature：23.4 ℃; Liquid Temperature：22.4 ℃

DASY5 Configuration:
- Probe: ES3DV3 - SN3270; ConvF(5.21, 5.21, 5.21); Calibrated: 2016/8/26;
- Sensor-Surface: 3mm (Mechanical Surface Detection)
- Electronics: DAE4 Sn778; Calibrated: 2016/5/12
- Phantom: SAM-Right; Type: SAM; Serial: 1795
- Measurement SW: DASY52, Version 52.8 (8);SEMCAD X Version 14.6.10 (7331)

Pin=250mW/Area Scan (61x61x1): Interpolated grid: dx=1.500 mm, dy=1.500 mm
Maximum value of SAR (interpolated) = 12.2 W/kg

Pin=250mW/Zoom Scan (5x5x7)/Cube 0: Measurement grid: dx=8mm, dy=8mm, dz=5mm
Reference Value = 95.49 V/m; Power Drift = -0.02 dB
Peak SAR (extrapolated) = 16.1 W/kg
SAR(1 g) = 9.49 W/kg; SAR(10 g) = 5.2 W/kg
Maximum value of SAR (measured) = 11.5 W/kg

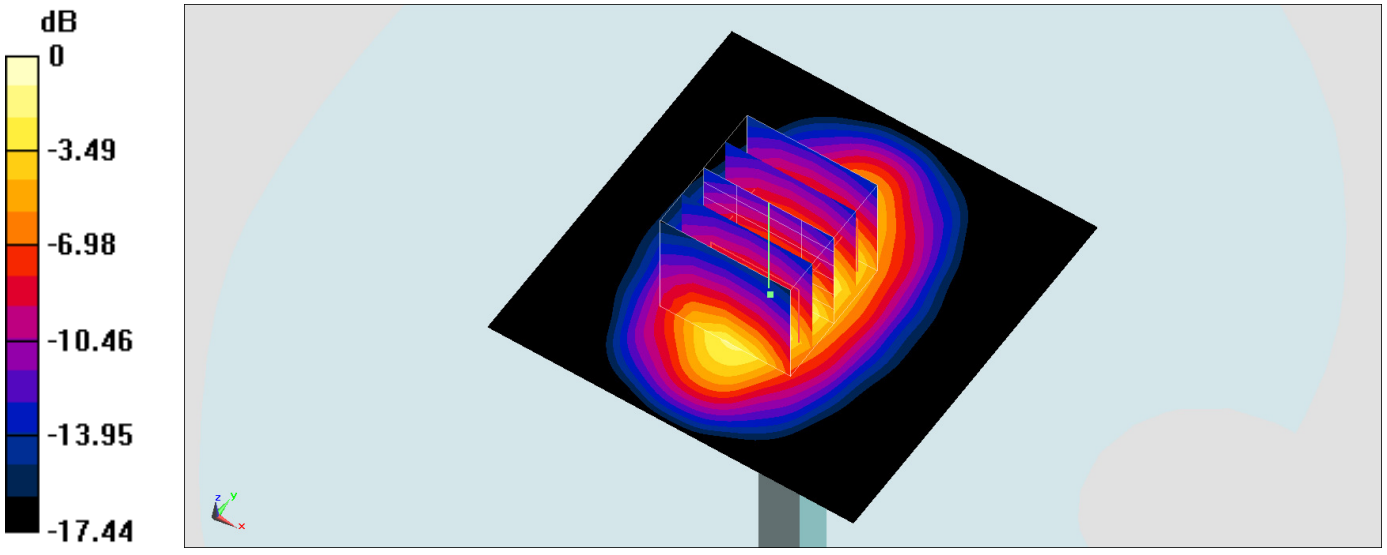

0 dB = 11.5 W/kg = 10.61 dBW/kg

System Check_Body_1750MHz

DUT: D1750V2-1068

Communication System: CW; Frequency: 1750 MHz;Duty Cycle: 1:1
Medium: MSL_1750_161211 Medium parameters used: f = 1750 MHz; σ = 1.46 S/m; ε_r = 55.233; ρ = 1000 kg/m^3
Ambient Temperature：23.2 ℃; Liquid Temperature：22.2 ℃

DASY5 Configuration
- Probe: EX3DV4 - SN3925; ConvF(8.3, 8.3, 8.3); Calibrated: 2016/5/26;
- Sensor-Surface: 1.4mm (Mechanical Surface Detection)
- Electronics: DAE3 Sn495; Calibrated: 2016/5/27
- Phantom: SAM_Left; Type: QD000P40CD; Serial: S/N:1796
- Measurement SW: DASY52, Version 52.8 (8); SEMCAD X Version 14.6.10 (7373)

Pin=250mW/Area Scan (61x61x1): Interpolated grid: dx=1.500 mm, dy=1.500 mm
Maximum value of SAR (interpolated) = 13.2 W/kg

Pin=250mW/Zoom Scan (5x5x7)/Cube 0: Measurement grid: dx=8mm, dy=8mm, dz=5mm
Reference Value = 97.60 V/m; Power Drift = -0.04 dB
Peak SAR (extrapolated) = 15.5 W/kg
SAR(1 g) = 8.83 W/kg; SAR(10 g) = 4.77 W/kg
Maximum value of SAR (measured) = 13.1 W/kg

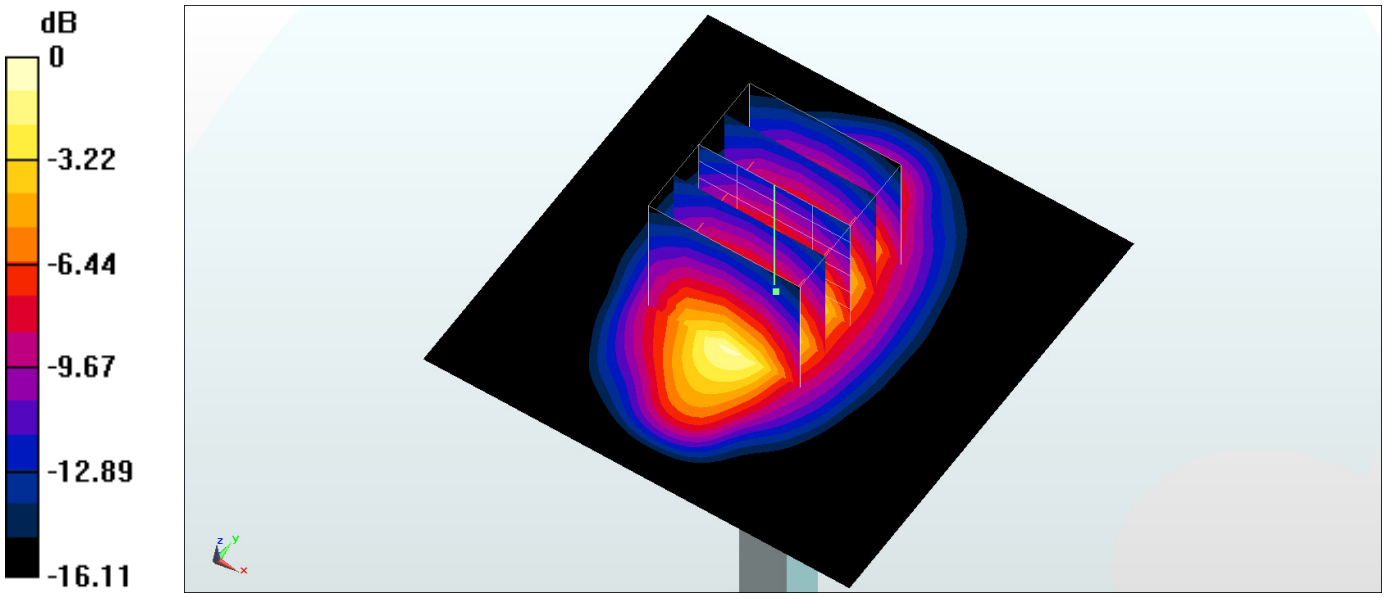

0 dB = 13.1 W/kg = 11.17 dBW/kg

System Check_Head_1900MHz

DUT: D1900V2-5d041

Communication System: CW; Frequency: 1900 MHz;Duty Cycle: 1:1
Medium: HSL_1900_161214 Medium parameters used: f = 1900 MHz; σ = 1.413 S/m; ε_r = 41.118; ρ = 1000 kg/m^3
Ambient Temperature：23.3 ℃; Liquid Temperature：22.3 ℃

DASY5 Configuration:
- Probe: ES3DV3 - SN3270; ConvF(5.08, 5.08, 5.08); Calibrated: 2016/8/26;
- Sensor-Surface: 3mm (Mechanical Surface Detection)
- Electronics: DAE4 Sn778; Calibrated: 2016/5/12
- Phantom: SAM-Right; Type: SAM; Serial: 1795
- Measurement SW: DASY52, Version 52.8 (8);SEMCAD X Version 14.6.10 (7331)

Pin=250mW/Area Scan (61x61x1): Interpolated grid: dx=1.500 mm, dy=1.500 mm
Maximum value of SAR (interpolated) = 14.0 W/kg

Pin=250mW/Zoom Scan (5x5x7)/Cube 0: Measurement grid: dx=8mm, dy=8mm, dz=5mm
Reference Value = 98.93 V/m; Power Drift = -0.02 dB
Peak SAR (extrapolated) = 18.2 W/kg
SAR(1 g) = 10.2 W/kg; SAR(10 g) = 5.39 W/kg
Maximum value of SAR (measured) = 12.8 W/kg

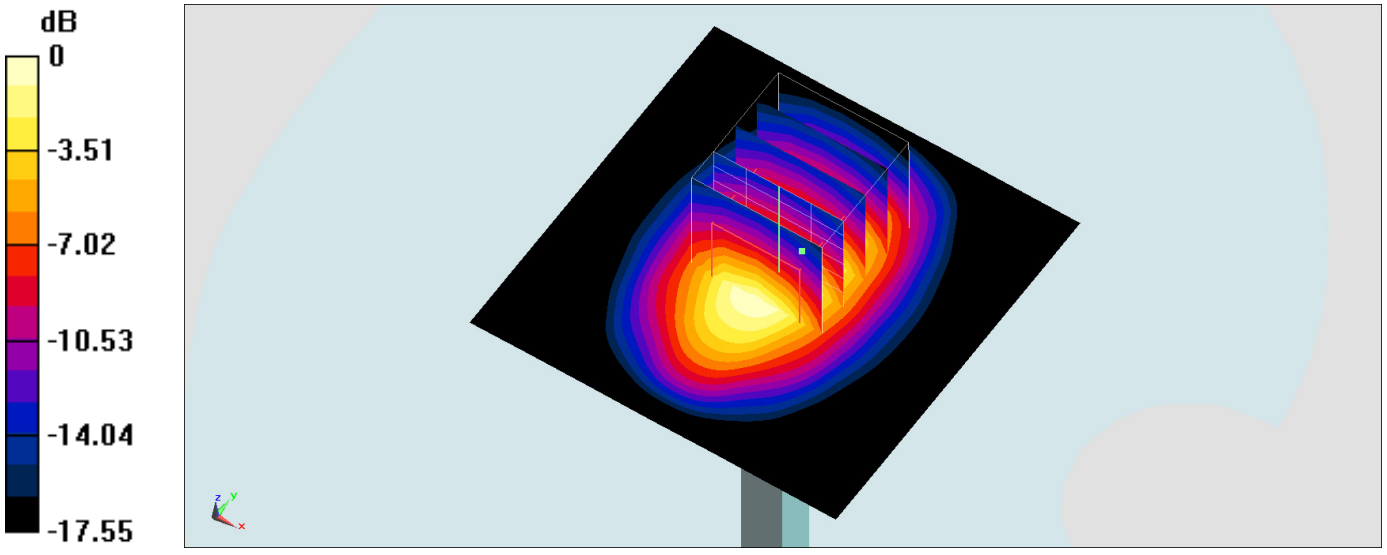

0 dB = 12.8 W/kg = 11.07 dBW/kg

System Check_Body_1900MHz

DUT: D1900V2-5d041

Communication System: CW; Frequency: 1900 MHz;Duty Cycle: 1:1
Medium: MSL_1900_161210 Medium parameters used: f = 1900 MHz; σ = 1.518 S/m; ε_r = 54.789; ρ = 1000 kg/m^3
Ambient Temperature：23.4 ℃; Liquid Temperature：22.4 ℃

DASY5 Configuration
- Probe: EX3DV4 - SN3925; ConvF(8, 8, 8); Calibrated: 2016/5/26;
- Sensor-Surface: 1.4mm (Mechanical Surface Detection)
- Electronics: DAE3 Sn495; Calibrated: 2016/5/27
- Phantom: SAM_Left; Type: QD000P40CD; Serial: S/N:1796
- Measurement SW: DASY52, Version 52.8 (8); SEMCAD X Version 14.6.10 (7373)

Pin=250mW/Area Scan (61x61x1): Interpolated grid: dx=1.500 mm, dy=1.500 mm
Maximum value of SAR (interpolated) = 15.3 W/kg

Pin=250mW/Zoom Scan (5x5x7)/Cube 0: Measurement grid: dx=8mm, dy=8mm, dz=5mm
Reference Value = 104.5 V/m; Power Drift = -0.09 dB
Peak SAR (extrapolated) = 18.1 W/kg
SAR(1 g) = 9.94 W/kg; SAR(10 g) = 5.19 W/kg
Maximum value of SAR (measured) = 15.0 W/kg

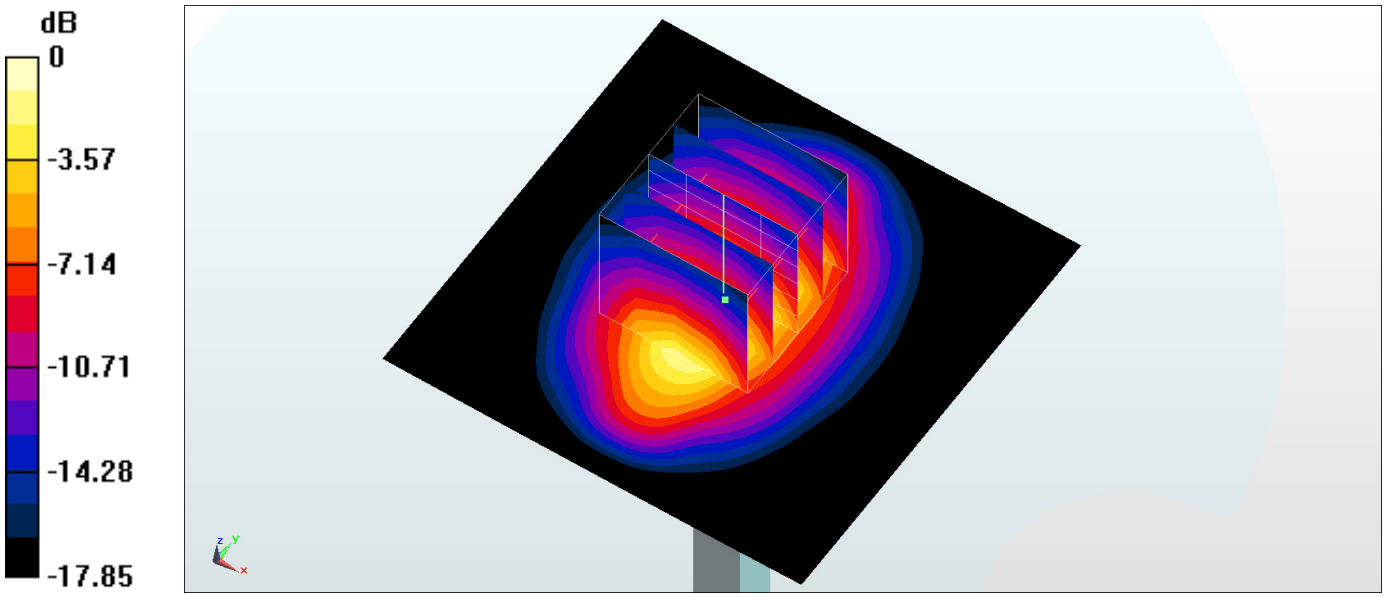

0 dB = 15.0 W/kg = 11.76 dBW/kg

System Check_Head_2600MHz

DUT: D2600V2-1008

Communication System: CW; Frequency: 2600 MHz;Duty Cycle: 1:1
Medium: HSL_2600_161209 Medium parameters used: f = 2600 MHz; σ = 1.927 S/m; ε_r = 39.158; ρ = 1000 kg/m^3
Ambient Temperature：23.5 ℃; Liquid Temperature：22.5 ℃

DASY5 Configuration
- Probe: EX3DV4 - SN3925; ConvF(7.28, 7.28, 7.28); Calibrated: 2016/5/26;
- Sensor-Surface: 1.4mm (Mechanical Surface Detection)
- Electronics: DAE3 Sn495; Calibrated: 2016/5/27
- Phantom: SAM_Right; Type: QD000P40CD; Serial: S/N:1801
- Measurement SW: DASY52, Version 52.8 (8); SEMCAD X Version 14.6.10 (7373)

Pin=250mW/Area Scan (61x61x1): Interpolated grid: dx=1.200 mm, dy=1.200 mm
Maximum value of SAR (interpolated) = 20.5 W/kg

Pin=250mW/Zoom Scan (7x7x7)/Cube 0: Measurement grid: dx=5mm, dy=5mm, dz=5mm
Reference Value = 105.0 V/m; Power Drift = -0.05 dB
Peak SAR (extrapolated) = 27.5 W/kg
SAR(1 g) = 13.2 W/kg; SAR(10 g) = 5.89 W/kg
Maximum value of SAR (measured) = 20.4 W/kg

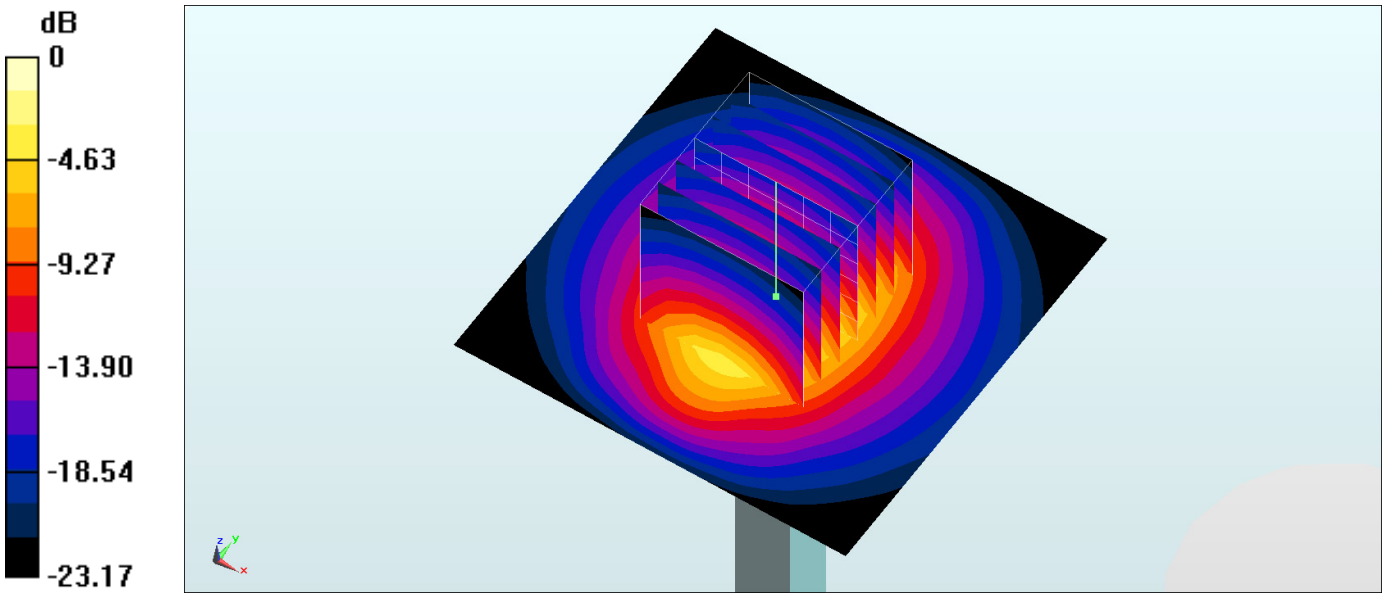

0 dB = 20.4 W/kg = 13.10 dBW/kg

System Check_Body_2600MHz

DUT: D2600V2-1008

Communication System: CW; Frequency: 2600 MHz;Duty Cycle: 1:1
Medium: MSL_2600_161209 Medium parameters used: f = 2600 MHz; σ = 2.184 S/m; ε_r = 52.327; ρ = 1000 kg/m^3
Ambient Temperature：23.5 ℃; Liquid Temperature：22.5 ℃

DASY5 Configuration
- Probe: EX3DV4 - SN3925; ConvF(7.38, 7.38, 7.38); Calibrated: 2016/5/26;
- Sensor-Surface: 1.4mm (Mechanical Surface Detection)
- Electronics: DAE3 Sn495; Calibrated: 2016/5/27
- Phantom: SAM_Left; Type: QD000P40CD; Serial: S/N:1796
- Measurement SW: DASY52, Version 52.8 (8); SEMCAD X Version 14.6.10 (7373)

Pin=250mW/Area Scan (61x61x1): Interpolated grid: dx=1.200 mm, dy=1.200 mm
Maximum value of SAR (interpolated) = 24.6 W/kg

Pin=250mW/Zoom Scan (7x7x7)/Cube 0: Measurement grid: dx=5mm, dy=5mm, dz=5mm
Reference Value = 107.6 V/m; Power Drift = 0.01 dB
Peak SAR (extrapolated) = 31.0 W/kg
SAR(1 g) = 14.4 W/kg; SAR(10 g) = 6.4 W/kg
Maximum value of SAR (measured) = 24.7 W/kg

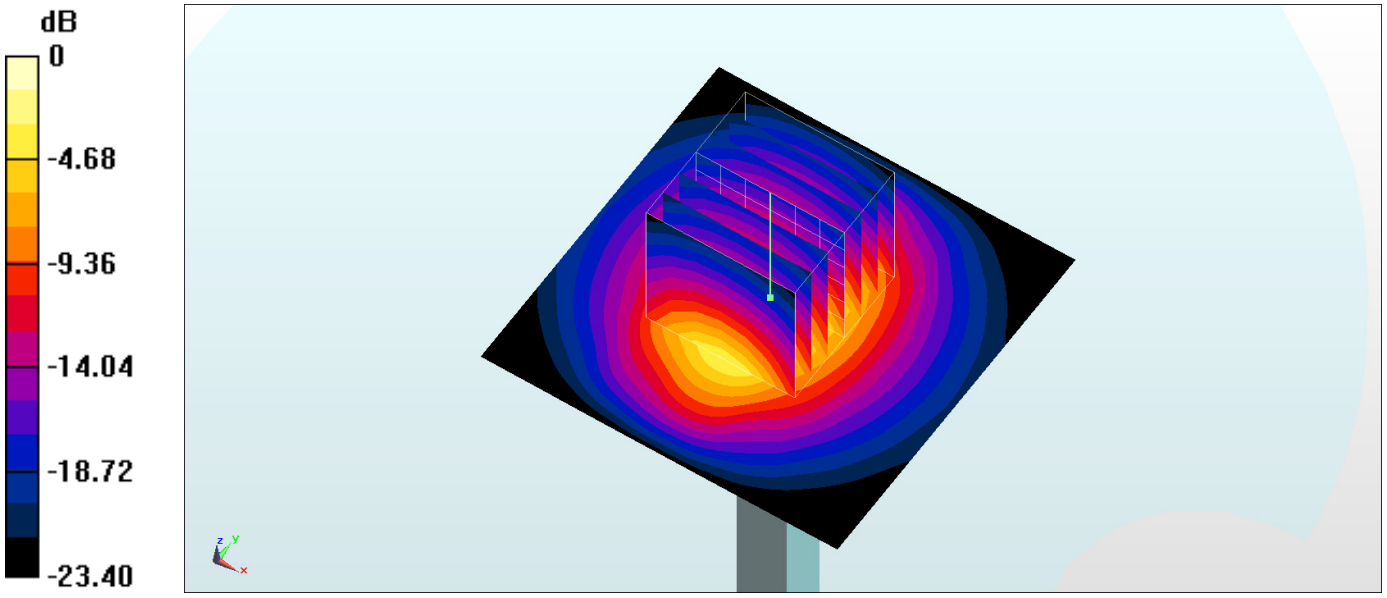

0 dB = 24.7 W/kg = 13.93 dBW/kg