FCC SAR Test Report

APPLICANT	:	**Sony Mobile Communications Inc.**
BRAND NAME	:	**Sony**
FCC ID	:	**PY7-84773W**
STANDARD	:	**FCC 47 CFR Part 2 (2.1093)** **ANSI/IEEE C95.1-1992** **IEEE 1528-2013**

We, SPORTON INTERNATIONAL INC., would like to declare that the tested sample has been evaluated in accordance with the procedures and had been in compliance with the applicable technical standards.

The test results in this report apply exclusively to the tested model / sample. Without written approval of SPORTON INTERNATIONAL INC., the test report shall not be reproduced except in full.

Reviewed by: Eric Huang / Manager

Approved by: Jones Tsai / Manager

Testing Laboratory
1190

SPORTON INTERNATIONAL INC.
No.52, Hwa Ya 1st Rd., Hwa Ya Technology Park, Kwei-Shan District, Taoyuan City, Taiwan (R.O.C.)

Table of Contents

1. Statement of Compliance **4**
2. Administration Data **5**
3. Guidance Applied **5**
4. Equipment Under Test (EUT) Information **6**
4.1 General Information 6
4.2 Device Serial Number 6
5. RF Exposure Limits **7**
5.1 Uncontrolled Environment 7
5.2 Controlled Environment 7
6. Specific Absorption Rate (SAR) **8**
6.1 Introduction 8
6.2 SAR Definition 8
7. System Description and Setup **9**
7.1 E-Field Probe 10
7.2 Data Acquisition Electronics (DAE) 10
7.3 Phantom 11
7.4 Device Holder 12
8. Measurement Procedures **13**
8.1 Spatial Peak SAR Evaluation 13
8.2 Power Reference Measurement 14
8.3 Area Scan 14
8.4 Zoom Scan 15
8.5 Volume Scan Procedures 15
8.6 Power Drift Monitoring 15
9. Test Equipment List **16**
10. System Verification **17**
10.1 Tissue Simulating Liquids 17
10.2 Tissue Verification 18
10.3 System Performance Check Results 19
11. RF Exposure Positions **21**
11.1 Ear and handset reference point 21
11.2 Definition of the cheek position 22
11.3 Definition of the tilt position 23
11.4 Body Worn Accessory 24
11.5 Wireless Router 24
12. Conducted RF Output Power (Unit: dBm) **25**
13. Bluetooth Exclusions Applied **46**
14. RF Exposure Conditions **46**
15. SAR Test Results **47**
15.1 Head SAR 49
15.2 Hotspot SAR 51
15.3 Body Worn Accessory SAR 54
15.4 Repeated SAR Measurement 56
15.5 Holder perturbation verification 56
16. Simultaneous Transmission Analysis **57**
16.1 Head Exposure Conditions 58
16.2 Hotspot Exposure Conditions 60
16.3 Body-Worn Accessory Exposure Conditions 62
17. Uncertainty Assessment **63**
18. References **66**
Appendix A. Plots of System Performance Check
Appendix B. Plots of High SAR Measurement
Appendix C. DASY Calibration Certificate
Appendix D. Antenna Location & Test Setup Photos & Holder perturbation verification setup photo

Revision History

REPORT NO.	VERSION	DESCRIPTION	ISSUED DATE
FA692208-01	Rev. 01	Initial issue of report	Feb. 07, 2017
FA692208-01	Rev. 02	1. Added accessories information in section 4.1 2. Added note 8 of page 47, note 1 of page 57 and note 1 of page 63. 3. Added overall and display dimensions of this device in appendix D	Feb. 15, 2017

1. Statement of Compliance

Applicant Name	Sony Mobile Communications INC.		
EUT Description	GSM/WCDMA/LTE Phone+Bluetooth, DTS/UNII a/b/g/n and NFC		
Brand Name	Sony		
FCC ID	PY7-84773W		
HW Version	A		
SW Version	.0.85		
RF Exposure Conditions	**Equipment Class**		
	Licensed	**DTS**	**U-NII**
Head (1g SAR W/kg)	0.28	1.28	1.19
Body-Worn (1g SAR W/kg)	0.82	0.18	0.28
Wireless Router (1g SAR W/kg)	1.34	0.41	
Highest Simultaneous Transmission (1g SAR W/kg)	Head:1.56 Body-worn:1.10 Hotspot:1.54	Head:1.56 Body-worn:0.99 Hotspot:1.54	Head:1.47 Body-worn:1.10 Hotspot: N/A
Date Tested	2016/10/17~2016/11/3		
Test Result	Pass		

Remark:
1. This device 2.4GHz WLAN supports Hotspot operation.
2. WCDMA B2, and LTE B2 / B7 power reduction is activated in hotspot mode.

This device is in compliance with Specific Absorption Rate (SAR) for general population/uncontrolled exposure limits (1.6 W/kg) specified in FCC 47 CFR part 2 (2.1093) and ANSI/IEEE C95.1-1992, and had been tested in accordance with the measurement methods and procedures specified in IEEE 1528-2013 and FCC KDB publications.

2. Administration Data

Testing Laboratory	
Test Site	SPORTON INTERNATIONAL INC.
Test Site Location	No.52, Hwa Ya 1st Rd., Hwa Ya Technology Park, Kwei-Shan District, Taoyuan City, Taiwan (R.O.C.) TEL: +886-3-327-3456 FAX: +886-3-328-4978

Applicant	
Company Name	Sony Mobile Communications Inc.
Address	4-12-3 Higashi-Shinagawa, Shinagawa-ku, Tokyo, 140-0002, Japan

Manufacturer	
Company Name	Sony Mobile Communications Inc.
Address	4-12-3 Higashi-Shinagawa, Shinagawa-ku, Tokyo, 140-0002, Japan

3. Guidance Applied

The Specific Absorption Rate (SAR) testing specification, method, and procedure for this device is in accordance with the following standards:

- FCC 47 CFR Part 2 (2.1093)
- ANSI/IEEE C95.1-1992
- IEEE 1528-2013
- FCC KDB 865664 D01 SAR Measurement 100 MHz to 6 GHz v01r04
- FCC KDB 865664 D02 SAR Reporting v01r02
- FCC KDB 447498 D01 General RF Exposure Guidance v06
- FCC KDB 648474 D04 SAR Evaluation Considerations for Wireless Handsets v01r03
- FCC KDB 248227 D01 802.11 Wi-Fi SAR v02r02
- FCC KDB 941225 D01 3G SAR Procedures v03r01
- FCC KDB 941225 D05 SAR for LTE Devices v02r05
- FCC KDB 941225 D05A Rel.10 LTE SAR Test Guidance v01r02
- FCC KDB 941225 D06 Hotspot Mode SAR v02r01

4. Equipment Under Test (EUT) Information

4.1 General Information

Wireless Technologies	Frequency	Operating Mode	
GSM	850 1900	· GSM Voice · GPRS (GMSK) · EDGE (8PSK)	Multi-Slot Class: Class 12
	Does device support dual transfer mode? (No)		
W-CDMA (UMTS)	Band 5 Band 2	· AMR / RMC 12.2Kbps · HSDPA · HSUPA · DC-HSDPA	
LTE (FDD)	Band 5 Band 2 Band 7	· QPSK · 16QAM · Rel 10 Carrier Aggregation Downlink only (Intra-Band possible combinations please referred to section 12.)	
WiFi	2.4GHz: 2412 MHz ~ 2462 MHz	· 11b · 11g · 11n (HT20)	
	5GHz: 5.2GHz: 5180 MHz ~ 5240 MHz 5.3GHz: 5260 MHz ~ 5320 MHz 5.5GHz: 5500 MHz ~ 5720 MHz 5.8GHz: 5745 MHz ~ 5825 MHz	· 11a · 11n (HT20) · 11n (HT40) · WLAN operation in 5600MHz ~ 5650MHz is notched	
Bluetooth	2.4GHz	· BR / EDR / LE	
NFC	13.56MHz	· ASK	

Accessories Information		
Battery 1	Brand Name	Sony
	Model Name	LIP1635ERPCS
	Power Rating	4.35 Vdc, 2300 mAh
	Type	Li-Polymer
Earphone 1	Brand Name	Sony
	Model Name	MH410c
	Vendor	Foster
Earphone 2	Brand Name	Sony
	Model Name	MH410c
	Vendor	Merry

4.2 Device Serial Number

Band	SN
WWAN	RQ3002HXPT
WLAN	RQ3002HWN3 RQ3002HXPT

Note: Several samples were used with identical hardware to support SAR testing. The manufacturer has confirmed that the device tested gave the same physical, mechanical and thermal characteristics and are within operational tolerances expected for production units.

5. RF Exposure Limits

5.1 Uncontrolled Environment

Uncontrolled Environments are defined as locations where there is the exposure of individuals who have no knowledge or control of their exposure. The general population/uncontrolled exposure limits are applicable to situations in which the general public may be exposed or in which persons who are exposed as a consequence of their employment may not be made fully aware of the potential for exposure or cannot exercise control over their exposure. Members of the general public would come under this category when exposure is not employment-related; for example, in the case of a wireless transmitter that exposes persons in its vicinity.

5.2 Controlled Environment

Controlled Environments are defined as locations where there is exposure that may be incurred by persons who are aware of the potential for exposure, (i.e. as a result of employment or occupation). In general, occupational/controlled exposure limits are applicable to situations in which persons are exposed as a consequence of their employment, who have been made fully aware of the potential for exposure and can exercise control over their exposure. The exposure category is also applicable when the exposure is of a transient nature due to incidental passage through a location where the exposure levels may be higher than the general population/uncontrolled limits, but the exposed person is fully aware of the potential for exposure and can exercise control over his or her exposure by leaving the area or by some other appropriate means.

Limits for Occupational/Controlled Exposure (W/kg)

Whole-Body	Partial-Body	Hands, Wrists, Feet and Ankles
0.4	8.0	20.0

Limits for General Population/Uncontrolled Exposure (W/kg)

Whole-Body	Partial-Body	Hands, Wrists, Feet and Ankles
0.08	1.6	4.0

1. Whole-Body SAR is averaged over the entire body, partial-body SAR is averaged over any 1gram of tissue defined as a tissue volume in the shape of a cube. SAR for hands, wrists, feet and ankles is averaged over any 10 grams of tissue defined as a tissue volume in the shape of a cube.

6. Specific Absorption Rate (SAR)

6.1 Introduction

SAR is related to the rate at which energy is absorbed per unit mass in an object exposed to a radio field. The SAR distribution in a biological body is complicated and is usually carried out by experimental techniques or numerical modeling. The standard recommends limits for two tiers of groups, occupational/controlled and general population/uncontrolled, based on a person's awareness and ability to exercise control over his or her exposure. In general, occupational/controlled exposure limits are higher than the limits for general population/uncontrolled.

6.2 SAR Definition

The SAR definition is the time derivative (rate) of the incremental energy (dW) absorbed by (dissipated in) an incremental mass (dm) contained in a volume element (dv) of a given density (ρ). The equation description is as below:

$$\mathbf{SAR} = \frac{\mathbf{d}}{\mathbf{dt}}\left(\frac{\mathbf{dW}}{\mathbf{dm}}\right) = \frac{\mathbf{d}}{\mathbf{dt}}\left(\frac{\mathbf{dW}}{\boldsymbol{\rho}\mathbf{dv}}\right)$$

SAR is expressed in units of Watts per kilogram (W/kg)

$$\mathbf{SAR} = \frac{\boldsymbol{\sigma}|\mathbf{E}|^2}{\boldsymbol{\rho}}$$

Where: σ is the conductivity of the tissue, ρ is the mass density of the tissue and E is the RMS electrical field strength.

7. System Description and Setup

The DASY system used for performing compliance tests consists of the following items:

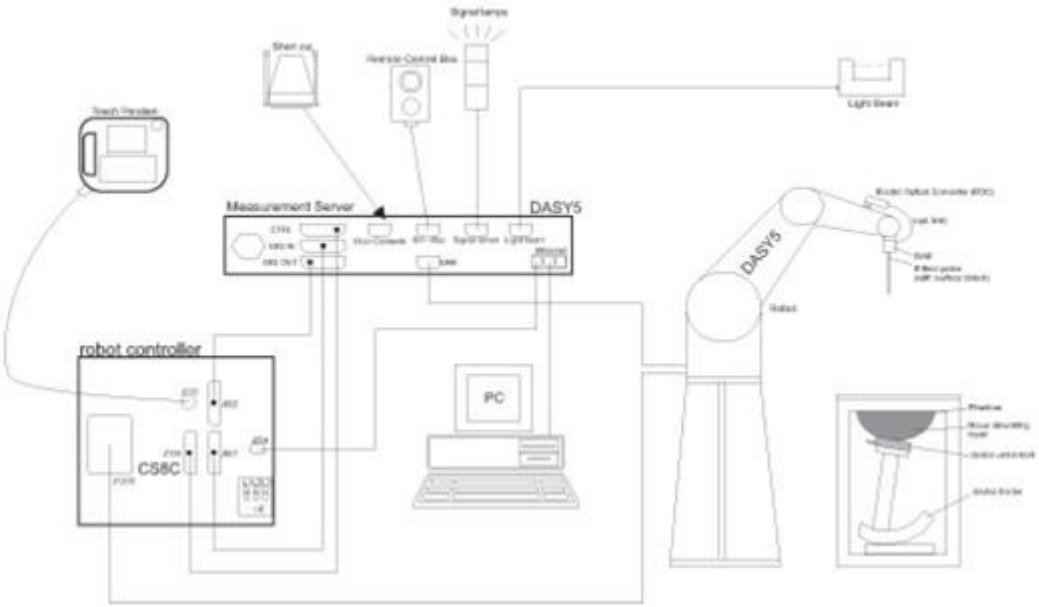

- A standard high precision 6-axis robot with controller, teach pendant and software. An arm extension for accommodating the data acquisition electronics (DAE).
- An isotropic Field probe optimized and calibrated for the targeted measurement.
- A data acquisition electronics (DAE) which performs the signal amplification, signal multiplexing, AD-conversion, offset measurements, mechanical surface detection, collision detection, etc. The unit is battery powered with standard or rechargeable batteries. The signal is optically transmitted to the EOC.
- The Electro-optical converter (EOC) performs the conversion from optical to electrical signals for the digital communication to the DAE. To use optical surface detection, a special version of the EOC is required. The EOC signal is transmitted to the measurement server.
- The function of the measurement server is to perform the time critical tasks such as signal filtering, control of the robot operation and fast movement interrupts.
- The Light Beam used is for probe alignment. This improves the (absolute) accuracy of the probe positioning.
- A computer running WinXP or Win7 and the DASY5 software.
- Remote control and teach pendant as well as additional circuitry for robot safety such as warning lamps, etc.
- The phantom, the device holder and other accessories according to the targeted measurement.

7.1 E-Field Probe

The SAR measurement is conducted with the dosimetric probe (manufactured by SPEAG).The probe is specially designed and calibrated for use in liquid with high permittivity. The dosimetric probe has special calibration in liquid at different frequency. This probe has a built in optical surface detection system to prevent from collision with phantom.

<ES3DV3 Probe>

Construction	Symmetric design with triangular core Interleaved sensors Built-in shielding against static charges PEEK enclosure material (resistant to organic solvents, e.g., DGBE)	
Frequency	10 MHz – 4 GHz; Linearity: ±0.2 dB (30 MHz – 4 GHz)	
Directivity	±0.2 dB in TSL (rotation around probe axis) ±0.3 dB in TSL (rotation normal to probe axis)	
Dynamic Range	5 µW/g – >100 mW/g; Linearity: ±0.2 dB	
Dimensions	Overall length: 337 mm (tip: 20 mm) Tip diameter: 3.9 mm (body: 12 mm) Distance from probe tip to dipole centers: 3.0 mm	

<EX3DV4 Probe>

Construction	Symmetric design with triangular core Built-in shielding against static charges PEEK enclosure material (resistant to organic solvents, e.g., DGBE)	
Frequency	10 MHz – >6 GHz Linearity: ±0.2 dB (30 MHz – 6 GHz)	
Directivity	±0.3 dB in TSL (rotation around probe axis) ±0.5 dB in TSL (rotation normal to probe axis)	
Dynamic Range	10 µW/g – >100 mW/g Linearity: ±0.2 dB (noise: typically <1 µW/g)	
Dimensions	Overall length: 337 mm (tip: 20 mm) Tip diameter: 2.5 mm (body: 12 mm) Typical distance from probe tip to dipole centers: 1 mm	

7.2 Data Acquisition Electronics (DAE)

The data acquisition electronics (DAE) consists of a highly sensitive electrometer-grade preamplifier with auto-zeroing, a channel and gain-switching multiplexer, a fast 16 bit AD-converter and a command decoder and control logic unit. Transmission to the measurement server is accomplished through an optical downlink for data and status information as well as an optical uplink for commands and the clock.

The input impedance of the DAE is 200 MOhm; the inputs are symmetrical and floating. Common mode rejection is above 80 dB.

Fig 5.1 Photo of DAE

7.3 Phantom

<SAM Twin Phantom>

Shell Thickness	2 ± 0.2 mm; Center ear point: 6 ± 0.2 mm
Filling Volume	Approx. 25 liters
Dimensions	Length: 1000 mm; Width: 500 mm; Height: adjustable feet
Measurement Areas	Left Hand, Right Hand, Flat Phantom

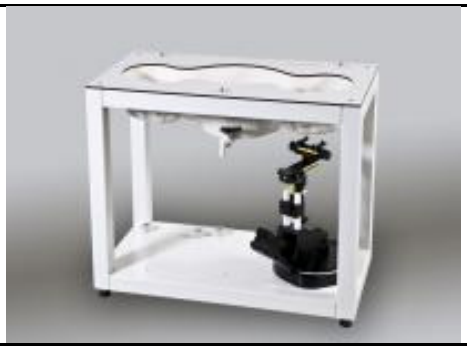

The bottom plate contains three pair of bolts for locking the device holder. The device holder positions are adjusted to the standard measurement positions in the three sections. A white cover is provided to tap the phantom during off-periods to prevent water evaporation and changes in the liquid parameters. On the phantom top, three reference markers are provided to identify the phantom position with respect to the robot.

<ELI Phantom>

Shell Thickness	2 ± 0.2 mm (sagging: <1%)
Filling Volume	Approx. 30 liters
Dimensions	Major ellipse axis: 600 mm Minor axis: 400 mm

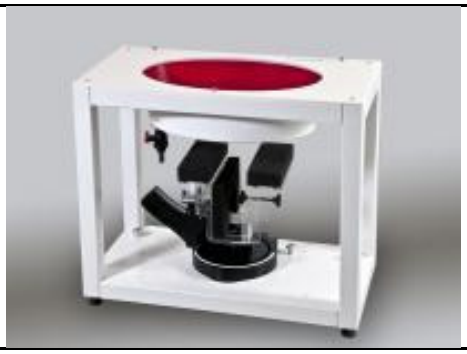

The ELI phantom is intended for compliance testing of handheld and body-mounted wireless devices in the frequency range of 30 MHz to 6 GHz. ELI4 is fully compatible with standard and all known tissue simulating liquids.

7.4 Device Holder

<Mounting Device for Hand-Held Transmitter>

In combination with the Twin SAM V5.0/V5.0c or ELI phantoms, the Mounting Device for Hand-Held Transmitters enables rotation of the mounted transmitter device to specified spherical coordinates. At the heads, the rotation axis is at the ear opening. Transmitter devices can be easily and accurately positioned according to IEC 62209-1, IEEE 1528, FCC, or other specifications. The device holder can be locked for positioning at different phantom sections (left head, right head, flat). And upgrade kit to Mounting Device to enable easy mounting of wider devices like big smart-phones, e-books, small tablets, etc. It holds devices with width up to 140 mm.

Mounting Device for Hand-Held Transmitters

Mounting Device Adaptor for Wide-Phones

<Mounting Device for Laptops and other Body-Worn Transmitters>

The extension is lightweight and made of POM, acrylic glass and foam. It fits easily on the upper part of the mounting device in place of the phone positioned. The extension is fully compatible with the SAM Twin and ELI phantoms.

Mounting Device for Laptops

8. Measurement Procedures

The measurement procedures are as follows:

<Conducted power measurement>

(a) For WWAN power measurement, use base station simulator to configure EUT WWAN transmission in conducted connection with RF cable, at maximum power in each supported wireless interface and frequency band.
(b) Read the WWAN RF power level from the base station simulator.
(c) For WLAN/BT power measurement, use engineering software to configure EUT WLAN/BT continuously transmission, at maximum RF power in each supported wireless interface and frequency band
(d) Connect EUT RF port through RF cable to the power meter, and measure WLAN/BT output power

<SAR measurement>

(a) Use base station simulator to configure EUT WWAN transmission in radiated connection, and engineering software to configure EUT WLAN/BT continuously transmission, at maximum RF power, in the highest power channel.
(b) Place the EUT in the positions as Appendix D demonstrates.
(c) Set scan area, grid size and other setting on the DASY software.
(d) Measure SAR results for the highest power channel on each testing position.
(e) Find out the largest SAR result on these testing positions of each band
(f) Measure SAR results for other channels in worst SAR testing position if the reported SAR of highest power channel is larger than 0.8 W/kg

According to the test standard, the recommended procedure for assessing the peak spatial-average SAR value consists of the following steps:

(a) Power reference measurement
(b) Area scan
(c) Zoom scan
(d) Power drift measurement

8.1 Spatial Peak SAR Evaluation

The procedure for spatial peak SAR evaluation has been implemented according to the test standard. It can be conducted for 1g and 10g, as well as for user-specific masses. The DASY software includes all numerical procedures necessary to evaluate the spatial peak SAR value.

The base for the evaluation is a "cube" measurement. The measured volume must include the 1g and 10g cubes with the highest averaged SAR values. For that purpose, the center of the measured volume is aligned to the interpolated peak SAR value of a previously performed area scan.

The entire evaluation of the spatial peak values is performed within the post-processing engine (SEMCAD). The system always gives the maximum values for the 1g and 10g cubes. The algorithm to find the cube with highest averaged SAR is divided into the following stages:

(a) Extraction of the measured data (grid and values) from the Zoom Scan
(b) Calculation of the SAR value at every measurement point based on all stored data (A/D values and measurement parameters)
(c) Generation of a high-resolution mesh within the measured volume
(d) Interpolation of all measured values form the measurement grid to the high-resolution grid
(e) Extrapolation of the entire 3-D field distribution to the phantom surface over the distance from sensor to surface
(f) Calculation of the averaged SAR within masses of 1g and 10g

8.2 Power Reference Measurement

The Power Reference Measurement and Power Drift Measurements are for monitoring the power drift of the device under test in the batch process. The minimum distance of probe sensors to surface determines the closest measurement point to phantom surface. This distance cannot be smaller than the distance of sensor calibration points to probe tip as defined in the probe properties.

8.3 Area Scan

The area scan is used as a fast scan in two dimensions to find the area of high field values, before doing a fine measurement around the hot spot. The sophisticated interpolation routines implemented in DASY software can find the maximum found in the scanned area, within a range of the global maximum. The range (in dB0 is specified in the standards for compliance testing. For example, a 2 dB range is required in IEEE standard 1528 and IEC 62209 standards, whereby 3 dB is a requirement when compliance is assessed in accordance with the ARIB standard (Japan), if only one zoom scan follows the area scan, then only the absolute maximum will be taken as reference. For cases where multiple maximums are detected, the number of zoom scans has to be increased accordingly.

Area scan parameters extracted from FCC KDB 865664 D01v01r04 SAR measurement 100 MHz to 6 GHz.

	≤ 3 GHz	> 3 GHz
Maximum distance from closest measurement point (geometric center of probe sensors) to phantom surface	5 ± 1 mm	½·δ·ln(2) ± 0.5 mm
Maximum probe angle from probe axis to phantom surface normal at the measurement location	30° ± 1°	20° ± 1°
Maximum area scan spatial resolution: Δx_{Area}, Δy_{Area}	≤ 2 GHz: ≤ 15 mm 2 – 3 GHz: ≤ 12 mm	3 – 4 GHz: ≤ 12 mm 4 – 6 GHz: ≤ 10 mm
	When the x or y dimension of the test device, in the measurement plane orientation, is smaller than the above, the measurement resolution must be ≤ the corresponding x or y dimension of the test device with at least one measurement point on the test device.	

8.4 Zoom Scan

Zoom scans are used assess the peak spatial SAR values within a cubic averaging volume containing 1 gram and 10 gram of simulated tissue. The zoom scan measures points (refer to table below) within a cube shoes base faces are centered on the maxima found in a preceding area scan job within the same procedure. When the measurement is done, the zoom scan evaluates the averaged SAR for 1 gram and 10 gram and displays these values next to the job's label.

Zoom scan parameters extracted from FCC KDB 865664 D01v01r04 SAR measurement 100 MHz to 6 GHz.

			≤ 3 GHz	> 3 GHz
Maximum zoom scan spatial resolution: Δx_{Zoom}, Δy_{Zoom}			≤ 2 GHz: ≤ 8 mm 2 – 3 GHz: ≤ 5 mm*	3 – 4 GHz: ≤ 5 mm* 4 – 6 GHz: ≤ 4 mm*
Maximum zoom scan spatial resolution, normal to phantom surface	uniform grid: $\Delta z_{Zoom}(n)$		≤ 5 mm	3 – 4 GHz: ≤ 4 mm 4 – 5 GHz: ≤ 3 mm 5 – 6 GHz: ≤ 2 mm
	graded grid	$\Delta z_{Zoom}(1)$: between 1st two points closest to phantom surface	≤ 4 mm	3 – 4 GHz: ≤ 3 mm 4 – 5 GHz: ≤ 2.5 mm 5 – 6 GHz: ≤ 2 mm
		$\Delta z_{Zoom}(n>1)$: between subsequent points	$\leq 1.5 \cdot \Delta z_{Zoom}(n-1)$	
Minimum zoom scan volume	x, y, z		≥ 30 mm	3 – 4 GHz: ≥ 28 mm 4 – 5 GHz: ≥ 25 mm 5 – 6 GHz: ≥ 22 mm

Note: δ is the penetration depth of a plane-wave at normal incidence to the tissue medium; see draft standard IEEE P1528-2011 for details.

* When zoom scan is required and the *reported* SAR from the *area scan based 1-g SAR estimation* procedures of KDB 447498 is ≤ 1.4 W/kg, ≤ 8 mm, ≤ 7 mm and ≤ 5 mm zoom scan resolution may be applied, respectively, for 2 GHz to 3 GHz, 3 GHz to 4 GHz and 4 GHz to 6 GHz.

8.5 Volume Scan Procedures

The volume scan is used for assess overlapping SAR distributions for antennas transmitting in different frequency bands. It is equivalent to an oversized zoom scan used in standalone measurements. The measurement volume will be used to enclose all the simultaneous transmitting antennas. For antennas transmitting simultaneously in different frequency bands, the volume scan is measured separately in each frequency band. In order to sum correctly to compute the 1g aggregate SAR, the EUT remain in the same test position for all measurements and all volume scan use the same spatial resolution and grid spacing. When all volume scan were completed, the software, SEMCAD postprocessor can combine and subsequently superpose these measurement data to calculating the multiband SAR.

8.6 Power Drift Monitoring

All SAR testing is under the EUT install full charged battery and transmit maximum output power. In DASY measurement software, the power reference measurement and power drift measurement procedures are used for monitoring the power drift of EUT during SAR test. Both these procedures measure the field at a specified reference position before and after the SAR testing. The software will calculate the field difference in dB. If the power drifts more than 5%, the SAR will be retested.

9. Test Equipment List

Manufacturer	Name of Equipment	Type/Model	Serial Number	Calibration	
				Last Cal.	Due Date
SPEAG	835MHz System Validation Kit	D835V2	4d200	Aug. 23, 2016	Aug. 22, 2017
SPEAG	1900MHz System Validation Kit	D1900V2	5d210	Aug. 25, 2016	Aug. 24, 2017
SPEAG	2450MHz System Validation Kit	D2450V2	926	Jul. 25, 2016	Jul. 24, 2017
SPEAG	2600MHz System Validation Kit	D2600V2	1113	Aug. 30, 2016	Aug. 29, 2017
SPEAG	5GHz System Validation Kit	D5GHzV2	1040	Jun. 17, 2016	Jun. 16, 2017
SPEAG	Data Acquisition Electronics	DAE4	679	Jun. 13, 2016	Jun. 12, 2017
SPEAG	Data Acquisition Electronics	DAE3	577	Sep. 28, 2016	Sep. 27, 2017
SPEAG	Dosimetric E-Field Probe	EX3DV4	3820	Jun. 27, 2016	Jun. 26, 2017
SPEAG	Dosimetric E-Field Probe	EX3DV4	3931	Oct. 03, 2016	Oct. 02, 2017
TESTO	Hygro meter	608-H1	34913631	Aug. 18, 2016	Aug. 17, 2017
TESTO	Hygro meter	608-H1	34852481	Sep. 21, 2016	Sep. 20, 2017
Anritsu	Radio Communication Analyzer	MT8820C	6201381760	May. 10, 2016	May. 09, 2017
Agilent	Wireless Communication Test Set	E5515C	MY50266977	May. 17, 2016	May. 16, 2017
SPEAG	Device Holder	N/A	N/A	N/A	N/A
R&S	Signal Generator	MG3710A	6201502524	Dec. 18, 2015	Dec. 17, 2016
Agilent	ENA Network Analyzer	E5071C	MY46316648	Jan. 12, 2016	Jan. 11, 2017
SPEAG	Dielectric Probe Kit	DAK-3.5	1126	Jul. 19, 2016	Jul. 18, 2017
LINE SEIKI	Digital Thermometer	LKMelectronic	DTM3000SPEZIAL	Sep. 05, 2016	Sep. 04, 2017
Anritsu	Power Meter	ML2495A	1419002	May. 10, 2016	May. 09, 2017
Anritsu	Power Sensor	MA2411B	1339124	May. 10, 2016	May. 09, 2017
Anritsu	Spectrum Analyzer	MS2830A	6201396378	Jun. 21, 2016	Jun. 20, 2017
Mini-Circuits	Power Amplifier	ZVE-8G+	D120604	Mar. 16, 2016	Mar. 15, 2017
Mini-Circuits	Power Amplifier	ZHL-42W+	QA1344002	Mar. 16, 2016	Mar. 15, 2017
ATM	Dual Directional Coupler	C122H-10	P610410z-02	Note 1	
Woken	Attenuator 1	WK0602-XX	N/A	Note 1	
PE	Attenuator 2	PE7005-10	N/A	Note 1	
PE	Attenuator 3	PE7005- 3	N/A	Note 1	

General Note:

1. Prior to system verification and validation, the path loss from the signal generator to the system check source and the power meter, which includes the amplifier, cable, attenuator and directional coupler, was measured by the network analyzer. The reading of the power meter was offset by the path loss difference between the path to the power meter and the path to the system check source to monitor the actual power level fed to the system check source.

10. System Verification

10.1 Tissue Simulating Liquids

For the measurement of the field distribution inside the SAM phantom with DASY, the phantom must be filled with around 25 liters of homogeneous body tissue simulating liquid. For head SAR testing, the liquid height from the ear reference point (ERP) of the phantom to the liquid top surface is larger than 15 cm, which is shown in Fig. 10.1. For body SAR testing, the liquid height from the center of the flat phantom to the liquid top surface is larger than 15 cm, which is shown in Fig. 10.2.

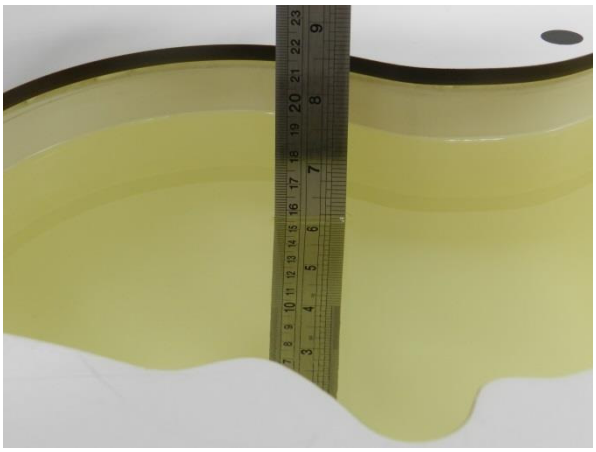

Fig 10.1Photo of Liquid Height for Head SAR

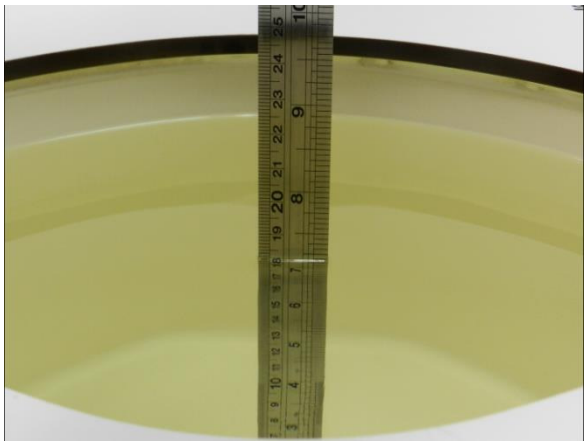

Fig 10.2 Photo of Liquid Height for Body SAR

10.2 Tissue Verification

The following tissue formulations are provided for reference only as some of the parameters have not been thoroughly verified. The composition of ingredients may be modified accordingly to achieve the desired target tissue parameters required for routine SAR evaluation.

Frequency (MHz)	Water (%)	Sugar (%)	Cellulose (%)	Salt (%)	Preventol (%)	DGBE (%)	Conductivity (σ)	Permittivity (εr)
For Head								
750	41.1	57.0	0.2	1.4	0.2	0	0.89	41.9
835	40.3	57.9	0.2	1.4	0.2	0	0.90	41.5
900	40.3	57.9	0.2	1.4	0.2	0	0.97	41.5
1800, 1900, 2000	55.2	0	0	0.3	0	44.5	1.40	40.0
2450	55.0	0	0	0	0	45.0	1.80	39.2
2600	54.8	0	0	0.1	0	45.1	1.96	39.0
For Body								
750	51.7	47.2	0	0.9	0.1	0	0.96	55.5
835	50.8	48.2	0	0.9	0.1	0	0.97	55.2
900	50.8	48.2	0	0.9	0.1	0	1.05	55.0
1800, 1900, 2000	70.2	0	0	0.4	0	29.4	1.52	53.3
2450	68.6	0	0	0	0	31.4	1.95	52.7
2600	68.1	0	0	0.1	0	31.8	2.16	52.5

Simulating Liquid for 5GHz, Manufactured by SPEAG

Ingredients	(% by weight)
Water	64~78%
Mineral oil	11~18%
Emulsifiers	9~15%
Additives and Salt	2~3%

<Tissue Dielectric Parameter Check Results>

Frequency (MHz)	Tissue Type	Liquid Temp. (℃)	Conductivity (σ)	Permittivity (ε_r)	Conductivity Target (σ)	Permittivity Target (ε_r)	Delta (σ) (%)	Delta (ε_r) (%)	Limit (%)	Date
835	HSL	22.4	0.892	43.176	0.90	41.50	-0.89	4.04	±5	2016/10/20
835	MSL	22.8	0.979	56.473	0.97	55.20	0.93	2.31	±5	2016/10/20
1900	HSL	22.6	1.416	41.590	1.40	40.00	1.14	3.98	±5	2016/10/21
1900	MSL	22.3	1.550	55.257	1.52	53.30	1.97	3.67	±5	2016/10/17
1900	MSL	22.2	1.518	54.712	1.52	53.30	-0.13	2.65	±5	2016/10/19
2450	HSL	22.5	1.798	39.866	1.80	39.20	-0.11	1.70	±5	2016/11/3
2450	MSL	22.5	1.899	52.183	1.95	52.70	-2.62	-0.98	±5	2016/11/3
2450	MSL	22.5	1.899	52.183	1.95	52.70	-2.62	-0.98	±5	2016/11/3
2600	HSL	22.2	1.924	38.520	1.96	39.00	-1.84	-1.23	±5	2016/10/21
2600	MSL	22.6	2.154	52.740	2.16	52.50	-0.28	0.46	±5	2016/10/18
2600	MSL	22.7	2.151	52.823	2.16	52.50	-0.42	0.62	±5	2016/10/20
5300	HSL	22.5	4.712	37.267	4.76	35.90	-1.01	3.81	±5	2016/10/24
5300	MSL	22.5	5.592	46.846	5.42	48.90	3.17	-4.20	±5	2016/10/26
5600	HSL	22.5	5.019	36.838	5.07	35.50	-1.01	3.77	±5	2016/10/24
5600	MSL	22.5	5.989	46.334	5.77	48.50	3.80	-4.47	±5	2016/10/26
5800	HSL	22.5	5.224	36.580	5.27	35.30	-0.87	3.63	±5	2016/10/24
5800	MSL	22.5	6.259	45.995	6.00	48.20	4.32	-4.57	±5	2016/10/26

10.3 System Performance Check Results

Comparing to the original SAR value provided by SPEAG, the verification data should be within its specification of 10 %. Below table shows the target SAR and measured SAR after normalized to 1W input power. The table below indicates the system performance check can meet the variation criterion and the plots can be referred to Appendix A of this report.

Date	Frequency (MHz)	Tissue Type	Input Power (mW)	Dipole S/N	Probe S/N	DAE S/N	Measured 1g SAR (W/kg)	Targeted 1g SAR (W/kg)	Normalized 1g SAR (W/kg)	Deviation (%)
2016/10/20	835	HSL	250	D835V2-4d200	EX3DV4 - SN3820	DAE4 Sn679	2.46	9.39	9.84	4.79
2016/10/20	835	MSL	250	D835V2-4d200	EX3DV4 - SN3820	DAE4 Sn679	2.59	9.65	10.36	7.36
2016/10/21	1900	HSL	250	D1900V2-5d210	EX3DV4 - SN3820	DAE4 Sn679	9.69	39.90	38.76	-2.86
2016/10/17	1900	MSL	250	D1900V2-5d210	EX3DV4 - SN3820	DAE4 Sn679	10.00	40.30	40.00	-0.74
2016/10/19	1900	MSL	250	D1900V2-5d210	EX3DV4 - SN3820	DAE4 Sn679	10.10	40.30	40.40	0.25
2016/11/3	2450	HSL	250	D2450V2-926	EX3DV4 - SN3931	DAE3 Sn577	13.40	52.80	53.60	1.52
2016/11/3	2450	MSL	250	D2450V2-926	EX3DV4 - SN3820	DAE4 Sn679	12.50	51.20	50.00	-2.34
2016/11/3	2450	MSL	250	D2450V2-926	EX3DV4 - SN3931	DAE3 Sn577	12.20	51.20	48.80	-4.69
2016/10/21	2600	HSL	250	D2600V2-1113	EX3DV4 - SN3820	DAE4 Sn679	14.10	56.80	56.40	-0.70
2016/10/18	2600	MSL	250	D2600V2-1113	EX3DV4 - SN3820	DAE4 Sn679	14.40	55.60	57.60	3.60
2016/10/20	2600	MSL	250	D2600V2-1113	EX3DV4 - SN3820	DAE4 Sn679	14.10	55.60	56.40	1.44
2016/10/24	5300	HSL	100	D5GHzV2-1040	EX3DV4 - SN3820	DAE4 Sn679	8.41	81.70	84.10	2.94
2016/10/26	5300	MSL	100	D5GHzV2-1040	EX3DV4 - SN3820	DAE4 Sn679	8.09	76.40	80.90	5.89
2016/10/24	5600	HSL	100	D5GHzV2-1040	EX3DV4 - SN3820	DAE4 Sn679	8.04	80.50	80.40	-0.12
2016/10/26	5600	MSL	100	D5GHzV2-1040	EX3DV4 - SN3820	DAE4 Sn679	7.72	78.40	77.20	-1.53
2016/10/24	5800	HSL	100	D5GHzV2-1040	EX3DV4 - SN3820	DAE4 Sn679	7.63	75.90	76.30	0.53
2016/10/26	5800	MSL	100	D5GHzV2-1040	EX3DV4 - SN3820	DAE4 Sn679	6.91	75.20	69.10	-8.11

Date	Frequency (MHz)	Tissue Type	Input Power (mW)	Dipole S/N	Probe S/N	DAE S/N	Measured 10g SAR (W/kg)	Targeted 10g SAR (W/kg)	Normalized 10g SAR (W/kg)	Deviation (%)
2016/10/20	835	HSL	250	D835V2-4d200	EX3DV4 - SN3820	DAE4 Sn679	1.66	6.19	6.64	7.27
2016/10/20	835	MSL	250	D835V2-4d200	EX3DV4 - SN3820	DAE4 Sn679	1.72	6.44	6.88	6.83
2016/10/21	1900	HSL	250	D1900V2-5d210	EX3DV4 - SN3820	DAE4 Sn679	5.16	20.90	20.64	-1.24
2016/10/17	1900	MSL	250	D1900V2-5d210	EX3DV4 - SN3820	DAE4 Sn679	5.37	21.40	21.48	0.37
2016/10/19	1900	MSL	250	D1900V2-5d210	EX3DV4 - SN3820	DAE4 Sn679	5.43	21.40	21.72	1.50
2016/11/3	2450	HSL	250	D2450V2-926	EX3DV4 - SN3931	DAE3 Sn577	6.25	24.50	25.00	2.04
2016/11/3	2450	MSL	250	D2450V2-926	EX3DV4 - SN3820	DAE4 Sn679	6.12	24.00	24.48	2.00
2016/11/3	2450	MSL	250	D2450V2-926	EX3DV4 - SN3931	DAE3 Sn577	5.79	24.00	23.16	-3.50
2016/10/21	2600	HSL	250	D2600V2-1113	EX3DV4 - SN3820	DAE4 Sn679	6.55	25.60	26.20	2.34
2016/10/18	2600	MSL	250	D2600V2-1113	EX3DV4 - SN3820	DAE4 Sn679	6.63	25.30	26.52	4.82
2016/10/20	2600	MSL	250	D2600V2-1113	EX3DV4 - SN3820	DAE4 Sn679	6.51	25.30	26.04	2.92
2016/10/24	5300	HSL	100	D5GHzV2-1040	EX3DV4 - SN3820	DAE4 Sn679	2.53	23.30	25.30	8.58
2016/10/26	5300	MSL	100	D5GHzV2-1040	EX3DV4 - SN3820	DAE4 Sn679	2.29	21.40	22.9	7.01
2016/10/24	5600	HSL	100	D5GHzV2-1040	EX3DV4 - SN3820	DAE4 Sn679	2.34	22.90	23.40	2.18
2016/10/26	5600	MSL	100	D5GHzV2-1040	EX3DV4 - SN3820	DAE4 Sn679	2.26	21.90	22.60	3.20
2016/10/24	5800	HSL	100	D5GHzV2-1040	EX3DV4 - SN3820	DAE4 Sn679	2.25	21.70	22.50	3.69
2016/10/26	5800	MSL	100	D5GHzV2-1040	EX3DV4 - SN3820	DAE4 Sn679	2.04	20.80	20.40	-1.92

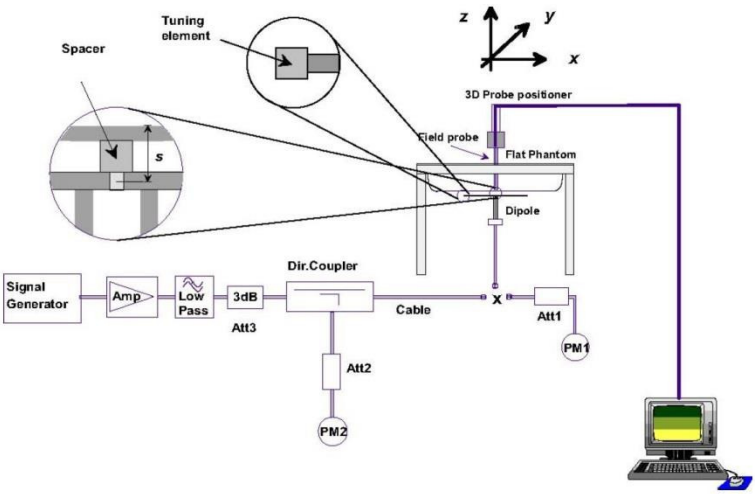

Fig 8.3.1 System Performance Check Setup

Fig 8.3.2 Setup Photo

11. RF Exposure Positions

11.1 Ear and handset reference point

Figure 9.1.1 shows the front, back, and side views of the SAM phantom. The center-of-mouth reference point is labeled “M,” the left ear reference point (ERP) is marked “LE,” and the right ERP is marked “RE.” Each ERP is 15 mm along the B-M (back-mouth) line behind the entrance-to-ear-canal (EEC) point, as shown in Figure 9.1.2 The Reference Plane is defined as passing through the two ear reference points and point M. The line N-F (neck-front), also called the reference pivoting line, is normal to the Reference Plane and perpendicular to both a line passing through RE and LE and the B-M line (see Figure 9.1.3). Both N-F and B-M lines should be marked on the exterior of the phantom shell to facilitate handset positioning. Posterior to the N-F line the ear shape is a flat surface with 6 mm thickness at each ERP, and forward of the N-F line the ear is truncated, as illustrated in Figure 9.1.2. The ear truncation is introduced to preclude the ear lobe from interfering with handset tilt, which could lead to unstable positioning at the cheek.

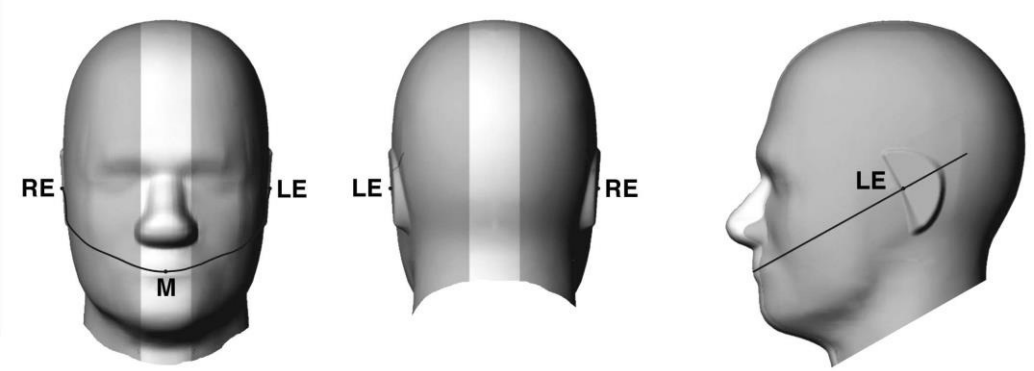

Fig 9.1.1 Front, back, and side views of SAM twin phantom

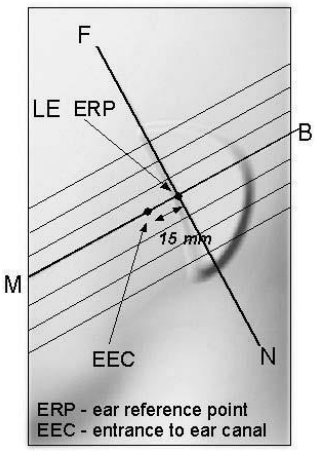

Fig 9.1.2 Close-up side view of phantom showing the ear region.

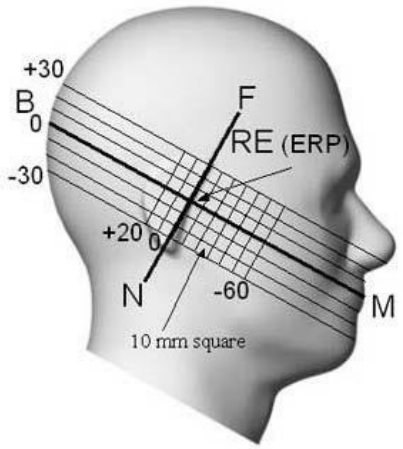

Fig 9.1.3 Side view of the phantom showing relevant markings and seven cross-sectional plane locations

11.2 Definition of the cheek position

1. Ready the handset for talk operation, if necessary. For example, for handsets with a cover piece (flip cover), open the cover. If the handset can transmit with the cover closed, both configurations must be tested.
2. Define two imaginary lines on the handset—the vertical centerline and the horizontal line. The vertical centerline passes through two points on the front side of the handset—the midpoint of the width wt of the handset at the level of the acoustic output (point A in Figure 9.2.1 and Figure 9.2.2), and the midpoint of the width wb of the bottom of the handset (point B). The horizontal line is perpendicular to the vertical centerline and passes through the center of the acoustic output (see Figure 9.2.1). The two lines intersect at point A. Note that for many handsets, point A coincides with the center of the acoustic output; however, the acoustic output may be located elsewhere on the horizontal line. Also note that the vertical centerline is not necessarily parallel to the front face of the handset (see Figure 9.2.2), especially for clamshell handsets, handsets with flip covers, and other irregularly-shaped handsets.
3. Position the handset close to the surface of the phantom such that point A is on the (virtual) extension of the line passing through points RE and LE on the phantom (see Figure 9.2.3), such that the plane defined by the vertical centerline and the horizontal line of the handset is approximately parallel to the sagittal plane of the phantom.
4. Translate the handset towards the phantom along the line passing through RE and LE until handset point A touches the pinna at the ERP.
5. While maintaining the handset in this plane, rotate it around the LE-RE line until the vertical centerline is in the plane normal to the plane containing B-M and N-F lines, i.e., the Reference Plane.
6. Rotate the handset around the vertical centerline until the handset (horizontal line) is parallel to the N-F line.
7. While maintaining the vertical centerline in the Reference Plane, keeping point A on the line passing through RE and LE, and maintaining the handset contact with the pinna, rotate the handset about the N-F line until any point on the handset is in contact with a phantom point below the pinna on the cheek. See Figure 9.2.3. The actual rotation angles should be documented in the test report.

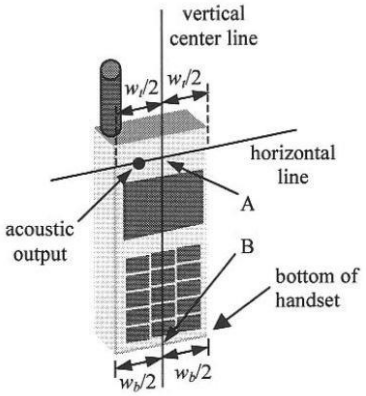

Fig 9.2.1 Handset vertical and horizontal reference lines—"fixed case

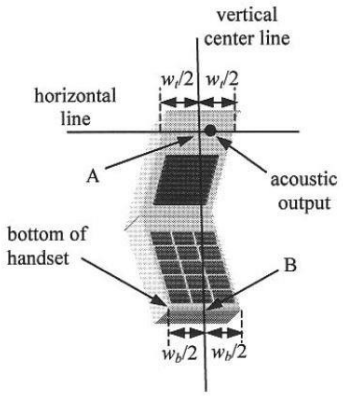

Fig 9.2.2 Handset vertical and horizontal reference lines—"clam-shell case"

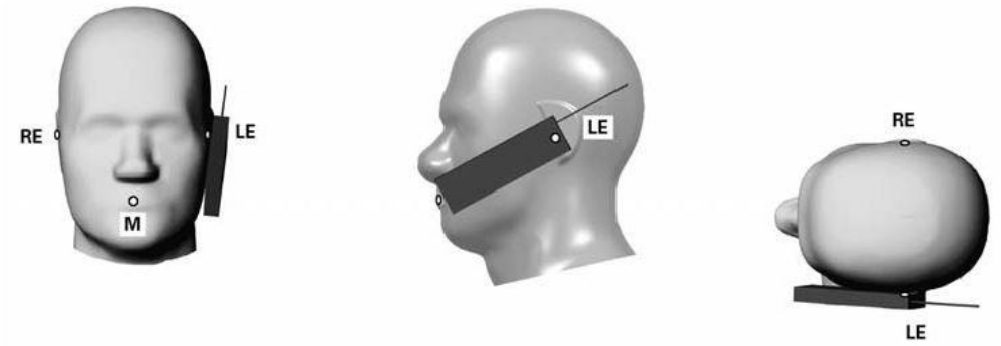

Fig 9.2.3 cheek or touch position. The reference points for the right ear (RE), left ear (LE), and mouth (M), which establish the Reference Plane for handset positioning, are indicated.

11.3 Definition of the tilt position

1. Ready the handset for talk operation, if necessary. For example, for handsets with a cover piece (flip cover), open the cover. If the handset can transmit with the cover closed, both configurations must be tested.
2. While maintaining the orientation of the handset, move the handset away from the pinna along the line passing through RE and LE far enough to allow a rotation of the handset away from the cheek by 15°.
3. Rotate the handset around the horizontal line by 15°.
4. While maintaining the orientation of the handset, move the handset towards the phantom on the line passing through RE and LE until any part of the handset touches the ear. The tilt position is obtained when the contact point is on the pinna. See Figure 9.3.1. If contact occurs at any location other than the pinna, e.g., the antenna at the back of the phantom head, the angle of the handset should be reduced. In this case, the tilt position is obtained if any point on the handset is in contact with the pinna and a second point

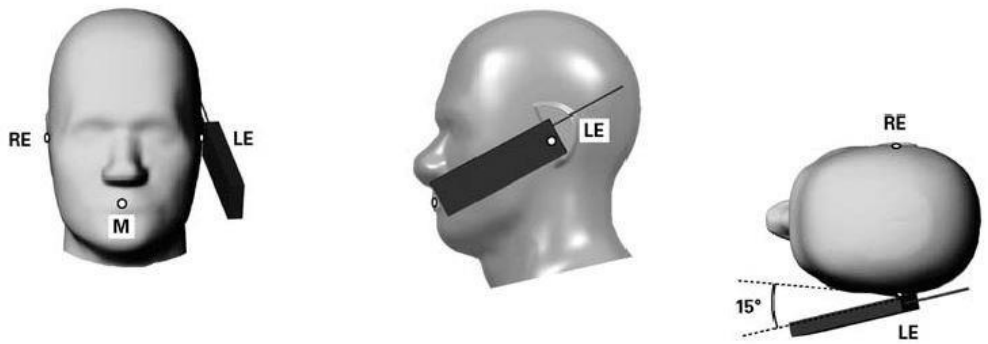

Fig 9.3.1 Tilt position. The reference points for the right ear (RE), left ear (LE), and mouth (M), which define the Reference Plane for handset positioning, are indicated.

11.4 Body Worn Accessory

Body-worn operating configurations are tested with the belt-clips and holsters attached to the device and positioned against a flat phantom in a normal use configuration (see Figure 9.4). Per KDB648474 D04v01r03, body-worn accessory exposure is typically related to voice mode operations when handsets are carried in body-worn accessories. The body-worn accessory procedures in FCC KDB 447498 D01v06 should be used to test for body-worn accessory SAR compliance, without a headset connected to it. This enables the test results for such configuration to be compatible with that required for hotspot mode when the body-worn accessory test separation distance is greater than or equal to that required for hotspot mode, when applicable. When the reported SAR for body-worn accessory, measured without a headset connected to the handset is > 1.2 W/kg, the highest reported SAR configuration for that wireless mode and frequency band should be repeated for that body-worn accessory with a handset attached to the handset.

Accessories for body-worn operation configurations are divided into two categories: those that do not contain metallic components and those that do contain metallic components and those that do contain metallic components. When multiple accessories that do not contain metallic components are supplied with the device, the device is tested with only the accessory that dictates the closest spacing to the body. Then multiple accessories that contain metallic components are test with the device with each accessory. If multiple accessories share an identical metallic component (i.e. the same metallic belt-chip used with different holsters with no other metallic components) only the accessory that dictates the closest spacing to the body is tested.

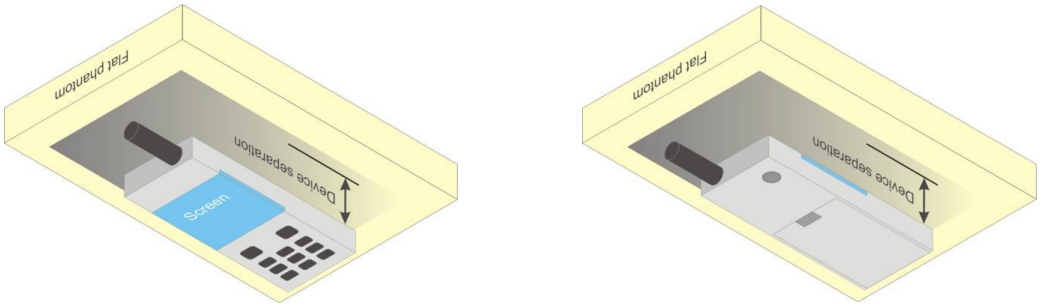

Fig 9.4 Body Worn Position

11.5 Wireless Router

Some battery-operated handsets have the capability to transmit and receive user through simultaneous transmission of WIFI simultaneously with a separate licensed transmitter. The FCC has provided guidance in FCC KDB Publication 941225 D06 v02r01 where SAR test considerations for handsets (L x W ≥ 9 cm x 5 cm) are based on a composite test separation distance of 10mm from the front, back and edges of the device containing transmitting antennas within 2.5cm of their edges, determined form general mixed use conditions for this type of devices. Since the hotspot SAR results may overlap with the body-worn accessory SAR requirements, the more conservative configurations can be considered, thus excluding some body-worn accessory SAR tests.

When the user enables the personal wireless router functions for the handset, actual operations include simultaneous transmission of both the WIFI transmitter and another licensed transmitter. Both transmitters often do not transmit at the same transmitting frequency and thus cannot be evaluated for SAR under actual use conditions due to the limitations of the SAR assessment probes. Therefore, SAR must be evaluated for each frequency transmission and mode separately and spatially summed with the WIFI transmitter according to FCC KDB Publication 447498 D01v06 publication procedures. The “Portable Hotspot” feature on the handset was NOT activated during SAR assessments, to ensure the SAR measurements were evaluated for a single transmission frequency RF signal at a time.

12. Conducted RF Output Power (Unit: dBm)

<GSM Conducted Power>

1. Per KDB 447498 D01v06, the maximum output power channel is used for SAR testing and for further SAR test reduction.
2. Per KDB 941225 D01v03r01, for SAR test reduction for GSM / GPRS / EDGE modes is determined by the source-based time-averaged output power including tune-up tolerance. The mode with highest specified time-averaged output power should be tested for SAR compliance in the applicable exposure conditions. For modes with the same specified maximum output power and tolerance, the higher number time-slot configuration should be tested. Therefore, the GPRS (4Tx slots) for GSM850 and GPRS (3Tx slots) for GSM1900 are considered as the primary mode.
3. Other configurations of GSM / GPRS / EDGE are considered as secondary modes. The 3G SAR test reduction procedure is applied, when the maximum output power and tune-up tolerance specified for production units in a secondary mode is ≤ ¼ dB higher than the primary mode, SAR measurement is not required for the secondary mode

GSM850	Burst Average Power (dBm)			Tune-up Limit (dBm)	Frame-Average Power (dBm)			Tune-up Limit (dBm)
TX Channel	128	189	251		128	189	251	
Frequency (MHz)	824.2	836.4	848.8		824.2	836.4	848.8	
GSM 1 Tx slot	33.36	33.35	33.32	33.50	24.36	24.35	24.32	24.50
GPRS 1 Tx slot	33.37	33.37	33.36	33.50	24.37	24.37	24.36	24.50
GPRS 2 Tx slots	30.04	30.13	30.17	31.00	24.04	24.13	24.17	25.00
GPRS 3 Tx slots	28.82	28.87	28.92	29.20	24.56	24.61	24.66	24.94
GPRS 4 Tx slots	27.85	27.88	27.96	28.00	24.85	24.88	24.96	25.00
EDGE 1 Tx slot	27.26	27.29	27.22	27.50	18.26	18.29	18.22	18.50
EDGE 2 Tx slots	27.03	27.06	27.06	27.30	21.03	21.06	21.06	21.30
EDGE 3 Tx slots	26.83	26.86	26.83	27.10	22.57	22.60	22.57	22.84
EDGE 4 Tx slots	26.59	26.63	26.60	26.90	23.59	23.63	23.60	23.90

GSM1900	Burst Average Power (dBm)			Tune-up Limit (dBm)	Frame-Average Power (dBm)			Tune-up Limit (dBm)
TX Channel	512	661	810		512	661	810	
Frequency (MHz)	1850.2	1880	1909.8		1850.2	1880	1909.8	
GSM 1 Tx slot	29.95	30.25	30.34	30.50	20.95	21.25	21.34	21.50
GPRS 1 Tx slot	29.95	30.24	30.33	30.50	20.95	21.24	21.33	21.50
GPRS 2 Tx slots	27.09	27.50	27.75	28.00	21.09	21.50	21.75	22.00
GPRS 3 Tx slots	25.26	25.69	25.96	26.50	21.00	21.43	21.70	22.24
GPRS 4 Tx slots	24.48	24.79	25.00	25.00	21.48	21.79	22.00	22.00
EDGE 1 Tx slot	25.85	25.89	26.00	26.00	16.85	16.89	17.00	17.00
EDGE 2 Tx slots	25.66	25.72	25.89	26.00	19.66	19.72	19.89	20.00
EDGE 3 Tx slots	25.32	25.29	25.44	25.50	21.06	21.03	21.18	21.24
EDGE 4 Tx slots	24.79	24.79	25.00	25.00	21.79	21.79	22.00	22.00

<WCDMA Conducted Power>

1. The following tests were conducted according to the test requirements outlines in 3GPP TS 34.121 specification.
2. The procedures in KDB 941225 D01v03r01 are applied for 3GPP Rel. 6 HSPA to configure the device in the required sub-test mode(s) to determine SAR test exclusion.
3. For DC-HSDPA, the device was configured according to the H-Set 12, Fixed Reference Channel (FRC) configuration in Table C.8.1.12 of 3GPP TS 34.121-1, with the primary and the secondary serving HS-DSCH Cell enabled during the power measurement.

A summary of these settings are illustrated below:

HSDPA Setup Configuration:

a. The EUT was connected to Base Station Agilent E5515C referred to the Setup Configuration.
b. The RF path losses were compensated into the measurements.
c. A call was established between EUT and Base Station with following setting:
   i. Set Gain Factors (β_c and β_d) and parameters were set according to each
   ii. Specific sub-test in the following table, C10.1.4, quoted from the TS 34.121
   iii. Set RMC 12.2Kbps + HSDPA mode.
   iv. Set Cell Power = -86 dBm
   v. Set HS-DSCH Configuration Type to FRC (H-set 1, QPSK)
   vi. Select HSDPA Uplink Parameters
   vii. Set Delta ACK, Delta NACK and Delta CQI = 8
   viii. Set Ack-Nack Repetition Factor to 3
   ix. Set CQI Feedback Cycle (k) to 4 ms
   x. Set CQI Repetition Factor to 2
   xi. Power Ctrl Mode = All Up bits
d. The transmitted maximum output power was recorded.

Table C.10.1.4: β values for transmitter characteristics tests with HS-DPCCH

Sub-test	β_c	β_d	β_d (SF)	β_c/β_d	β_{HS} (Note1, Note 2)	CM (dB) (Note 3)	MPR (dB) (Note 3)
1	2/15	15/15	64	2/15	4/15	0.0	0.0
2	12/15 (Note 4)	15/15 (Note 4)	64	12/15 (Note 4)	24/15	1.0	0.0
3	15/15	8/15	64	15/8	30/15	1.5	0.5
4	15/15	4/15	64	15/4	30/15	1.5	0.5

Note 1: Δ_{ACK}, Δ_{NACK} and Δ_{CQI} = 30/15 with β_{hs} = 30/15 * β_c.

Note 2: For the HS-DPCCH power mask requirement test in clause 5.2C, 5.7A, and the Error Vector Magnitude (EVM) with HS-DPCCH test in clause 5.13.1A, and HSDPA EVM with phase discontinuity in clause 5.13.1AA, Δ_{ACK} and Δ_{NACK} = 30/15 with β_{hs} = 30/15 * β_c, and Δ_{CQI} = 24/15 with β_{hs} = 24/15 * β_c.

Note 3: CM = 1 for β_c/β_d =12/15, β_{hs}/β_c=24/15. For all other combinations of DPDCH, DPCCH and HS-DPCCH the MPR is based on the relative CM difference. This is applicable for only UEs that support HSDPA in release 6 and later releases.

Note 4: For subtest 2 the β_c/β_d ratio of 12/15 for the TFC during the measurement period (TF1, TF0) is achieved by setting the signalled gain factors for the reference TFC (TF1, TF1) to β_c = 11/15 and β_d = 15/15.

Setup Configuration

HSUPA Setup Configuration:

a. The EUT was connected to Base Station Agilent E5515C referred to the Setup Configuration.
b. The RF path losses were compensated into the measurements.
c. A call was established between EUT and Base Station with following setting * :
   i. Call Configs = 5.2B, 5.9B, 5.10B, and 5.13.2B with QPSK
   ii. Set the Gain Factors (β_c and β_d) and parameters (AG Index) were set according to each specific sub-test in the following table, C11.1.3, quoted from the TS 34.121
   iii. Set Cell Power = -86 dBm
   iv. Set Channel Type = 12.2k + HSPA
   v. Set UE Target Power
   vi. Power Ctrl Mode= Alternating bits
   vii. Set and observe the E-TFCI
   viii. Confirm that E-TFCI is equal to the target E-TFCI of 75 for sub-test 1, and other subtest's E-TFCI
d. The transmitted maximum output power was recorded.

Table C.11.1.3: β values for transmitter characteristics tests with HS-DPCCH and E-DCH

Sub-test	β_c	β_d	β_d (SF)	β_c/β_d	β_{HS} (Note1)	β_{ec}	β_{ed} (Note 5) (Note 6)	β_{ed} (SF)	β_{ed} (Codes)	CM (dB) (Note 2)	MPR (dB) (Note 2)	AG Index (Note 6)	E-TFCI
1	11/15 (Note 3)	15/15 (Note 3)	64	11/15 (Note 3)	22/15	209/225	1309/225	4	1	1.0	0.0	20	75
2	6/15	15/15	64	6/15	12/15	12/15	94/75	4	1	3.0	2.0	12	67
3	15/15	9/15	64	15/9	30/15	30/15	$\beta_{ed}1$: 47/15 $\beta_{ed}2$: 47/15	4 4	2	2.0	1.0	15	92
4	2/15	15/15	64	2/15	4/15	2/15	56/75	4	1	3.0	2.0	17	71
5	15/15 (Note 4)	15/15 (Note 4)	64	15/15 (Note 4)	30/15	24/15	134/15	4	1	1.0	0.0	21	81

Note 1: Δ_{ACK}, Δ_{NACK} and Δ_{CQI} = 30/15 with β_{hs} = 30/15 * β_c .

Note 2: CM = 1 for β_c/β_d =12/15, β_{hs}/β_c=24/15. For all other combinations of DPDCH, DPCCH, HS- DPCCH, E-DPDCH and E-DPCCH the MPR is based on the relative CM difference.

Note 3: For subtest 1 the β_c/β_d ratio of 11/15 for the TFC during the measurement period (TF1, TF0) is achieved by setting the signalled gain factors for the reference TFC (TF1, TF1) to β_c = 10/15 and β_d = 15/15.

Note 4: For subtest 5 the β_c/β_d ratio of 15/15 for the TFC during the measurement period (TF1, TF0) is achieved by setting the signalled gain factors for the reference TFC (TF1, TF1) to β_c = 14/15 and β_d = 15/15.

Note 5: In case of testing by UE using E-DPDCH Physical Layer category 1, Sub-test 3 is omitted according to TS25.306 Table 5.1g.

Note 6: β_{ed} can not be set directly, it is set by Absolute Grant Value.

Setup Configuration

DC-HSDPA 3GPP release 8 Setup Configuration:

a. The EUT was connected to Base Station Agilent E5515C referred to the Setup Configuration below
b. The RF path losses were compensated into the measurements.
c. A call was established between EUT and Base Station with following setting:
   i. Set RMC 12.2Kbps + HSDPA mode.
   ii. Set Cell Power = -25 dBm
   iii. Set HS-DSCH Configuration Type to FRC (H-set 12, QPSK)
   iv. Select HSDPA Uplink Parameters
   v. Set Gain Factors (β_c and β_d) and parameters were set according to each Specific sub-test in the following table, C10.1.4, quoted from the TS 34.121
      a). Subtest 1: β_c/β_d=2/15
      b). Subtest 2: β_c/β_d=12/15
      c). Subtest 3: β_c/β_d=15/8
      d). Subtest 4: β_c/β_d=15/4
   vi. Set Delta ACK, Delta NACK and Delta CQI = 8
   vii. Set Ack-Nack Repetition Factor to 3
   viii. Set CQI Feedback Cycle (k) to 4 ms
   ix. Set CQI Repetition Factor to 2
   x. Power Ctrl Mode = All Up bits
d. The transmitted maximum output power was recorded.

The following tests were conducted according to the test requirements outlines in 3GPP TS 34.121 specification.
A summary of these settings are illustrated below:

C.8.1.12 Fixed Reference Channel Definition H-Set 12

Table C.8.1.12: Fixed Reference Channel H-Set 12

Parameter	Unit	Value
Nominal Avg. Inf. Bit Rate	kbps	60
Inter-TTI Distance	TTI's	1
Number of HARQ Processes	Processes	6
Information Bit Payload (N_{INF})	Bits	120
Number Code Blocks	Blocks	1
Binary Channel Bits Per TTI	Bits	960
Total Available SML's in UE	SML's	19200
Number of SML's per HARQ Proc.	SML's	3200
Coding Rate		0.15
Number of Physical Channel Codes	Codes	1
Modulation		QPSK
Note 1: The RMC is intended to be used for DC-HSDPA mode and both cells shall transmit with identical parameters as listed in the table.		
Note 2: Maximum number of transmission is limited to 1, i.e., retransmission is not allowed. The redundancy and constellation version 0 shall be used.		

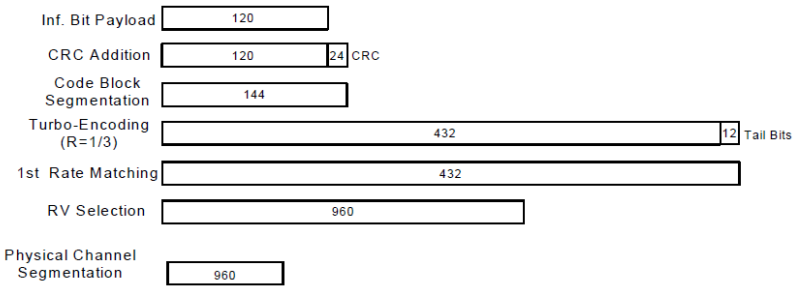

Figure C.8.19: Coding rate for Fixed reference Channel H-Set 12 (QPSK)

Setup Configuration

<WCDMA Conducted Power>

General Note:

1. Per KDB 941225 D01v03r01, for SAR testing is measured using a 12.2 kbps RMC with TPC bits configured to all "1's".
2. Per KDB 941225 D01v03r01, RMC 12.2kbps setting is used to evaluate SAR. If the maximum output power and tune-up tolerance specified for production units in HSDPA / HSUPA / DC-HSDPA is ≤ ¼ dB higher than RMC 12.2Kbps or when the highest reported SAR of the RMC12.2Kbps is scaled by the ratio of specified maximum output power and tune-up tolerance of HSDPA / HSUPA / DC-HSDPA to RMC12.2Kbps and the adjusted SAR is ≤ 1.2 W/kg, SAR measurement is not required for HSDPA / HSUPA / DC-HSDPA.

<Default Power Mode>

Band		WCDMA II			Tune-up Limit (dBm)	WCDMA V			Tune-up Limit (dBm)
TX Channel		9262	9400	9538		4132	4182	4233	
Rx Channel		9662	9800	9938		4357	4407	4458	
Frequency (MHz)		1852.4	1880	1907.6		826.4	836.4	846.6	
3GPP Rel 99	AMR 12.2Kbps	23.79	23.68	23.83	24.00	24.36	24.28	24.34	24.50
3GPP Rel 99	RMC 12.2Kbps	23.84	23.78	23.85	24.00	24.40	24.29	24.35	24.50
3GPP Rel 6	HSDPA Subtest-1	22.93	22.77	22.88	23.00	23.37	23.31	23.33	23.50
3GPP Rel 6	HSDPA Subtest-2	22.91	22.80	22.89	23.00	23.35	23.30	23.35	23.50
3GPP Rel 6	HSDPA Subtest-3	22.49	22.38	22.46	22.50	22.91	22.84	22.85	23.00
3GPP Rel 6	HSDPA Subtest-4	22.48	22.29	22.42	22.50	22.89	22.86	22.84	23.00
3GPP Rel 8	DC-HSDPA Subtest-1	22.82	22.68	22.79	23.00	23.28	23.20	23.23	23.50
3GPP Rel 8	DC-HSDPA Subtest-2	22.77	22.70	22.77	23.00	23.25	23.18	23.19	23.50
3GPP Rel 8	DC-HSDPA Subtest-3	22.38	22.29	22.37	22.50	22.82	22.73	22.75	23.00
3GPP Rel 8	DC-HSDPA Subtest-4	22.36	22.22	22.34	22.50	22.78	22.74	22.72	23.00
3GPP Rel 6	HSUPA Subtest-1	20.91	20.80	20.87	22.50	21.68	21.52	21.56	23.50
3GPP Rel 6	HSUPA Subtest-2	20.96	20.87	20.92	21.00	21.49	21.32	21.38	21.50
3GPP Rel 6	HSUPA Subtest-3	21.83	21.81	21.76	22.00	22.46	22.34	22.31	22.50
3GPP Rel 6	HSUPA Subtest-4	20.49	20.40	20.43	20.50	21.18	21.07	21.11	21.50
3GPP Rel 6	HSUPA Subtest-5	21.92	21.82	21.86	22.50	22.40	22.26	22.34	23.50

<Reduced Power Mode>

Band		WCDMA II			Tune-up Limit (dBm)
TX Channel		9262	9400	9538	
Rx Channel		9662	9800	9938	
Frequency (MHz)		1852.4	1880	1907.6	
3GPP Rel 99	AMR 12.2Kbps	21.73	21.67	21.85	22.00
3GPP Rel 99	RMC 12.2Kbps	21.76	21.70	21.86	22.00
3GPP Rel 6	HSDPA Subtest-1	21.82	21.75	21.84	22.00
3GPP Rel 6	HSDPA Subtest-2	21.75	21.74	21.81	22.00
3GPP Rel 6	HSDPA Subtest-3	21.34	21.29	21.39	22.00
3GPP Rel 6	HSDPA Subtest-4	21.19	21.15	21.27	22.00
3GPP Rel 8	DC-HSDPA Subtest-1	21.57	21.54	21.64	22.00
3GPP Rel 8	DC-HSDPA Subtest-2	21.73	21.65	21.64	22.00
3GPP Rel 8	DC-HSDPA Subtest-3	21.34	21.14	21.23	22.00
3GPP Rel 8	DC-HSDPA Subtest-4	21.07	21.00	21.20	22.00
3GPP Rel 6	HSUPA Subtest-1	20.74	20.75	20.83	22.00
3GPP Rel 6	HSUPA Subtest-2	20.15	20.21	20.15	21.00
3GPP Rel 6	HSUPA Subtest-3	21.21	21.18	21.02	22.00
3GPP Rel 6	HSUPA Subtest-4	19.76	19.69	19.81	20.50
3GPP Rel 6	HSUPA Subtest-5	21.22	21.18	21.26	22.00

<LTE Conducted Power>

General Note:

1. Anritsu MT8820C base station simulator was used to setup the connection with EUT; the frequency band, channel bandwidth, RB allocation configuration, modulation type are set in the base station simulator to configure EUT transmitting at maximum power and at different configurations which are requested to be reported to FCC, for conducted power measurement and SAR testing.
2. Per KDB 941225 D05v02r05, when a properly configured base station simulator is used for the SAR and power measurements, spectrum plots for each RB allocation and offset configuration is not required.
3. Per KDB 941225 D05v02r05, start with the largest channel bandwidth and measure SAR for QPSK with 1 RB allocation, using the RB offset and required test channel combination with the highest maximum output power for RB offsets at the upper edge, middle and lower edge of each required test channel.
4. Per KDB 941225 D05v02r05, 50% RB allocation for QPSK SAR testing follows 1RB QPSK allocation procedure.
5. Per KDB 941225 D05v02r05, For QPSK with 100% RB allocation, SAR is not required when the highest maximum output power for 100 % RB allocation is less than the highest maximum output power in 50% and 1 RB allocations and the highest reported SAR for 1 RB and 50% RB allocation are ≤ 0.8 W/kg. Otherwise, SAR is measured for the highest output power channel; and if the reported SAR is > 1.45 W/kg, the remaining required test channels must also be tested.
6. Per KDB 941225 D05v02r05, 16QAM output power for each RB allocation configuration is > not ½ dB higher than the same configuration in QPSK and the reported SAR for the QPSK configuration is ≤ 1.45 W/kg; Per KDB 941225 D05v02r05, 16QAM SAR testing is not required.
7. Per KDB 941225 D05v02r05, Smaller bandwidth output power for each RB allocation configuration is > not ½ dB higher than the same configuration in the largest supported bandwidth, and the reported SAR for the largest supported bandwidth is ≤ 1.45 W/kg; Per KDB 941225 D05v02r05, smaller bandwidth SAR testing is not required.
8. For LTE B5 the maximum bandwidth does not support three non-overlapping channels, per KDB 941225 D05v02r05, when a device supports overlapping channel assignment in a channel bandwidth configuration, the middle channel of the group of overlapping channels should be selected for testing.

<Default Power Mode>

<LTE Band 2>

BW [MHz]	Modulation	RB Size	RB Offset	Power Low Ch. / Freq.	Power Middle Ch. / Freq.	Power High Ch. / Freq.	Tune-up limit (dBm)	MPR (dB)
Channel				18700	18900	19100		
Frequency (MHz)				1860	1880	1900		
20	QPSK	1	0	24.00	23.95	23.57	24	0
20	QPSK	1	49	23.93	23.55	23.56		
20	QPSK	1	99	23.97	23.51	23.53		
20	QPSK	50	0	23.00	22.54	22.51	23	1
20	QPSK	50	24	22.98	22.52	22.50		
20	QPSK	50	50	22.95	22.58	22.53		
20	QPSK	100	0	23.00	22.54	22.51		
20	16QAM	1	0	23.00	22.81	22.67	23	1
20	16QAM	1	49	22.93	22.51	22.50		
20	16QAM	1	99	23.00	22.66	22.54		
20	16QAM	50	0	21.81	21.40	21.40	22	2
20	16QAM	50	24	21.88	21.49	21.43		
20	16QAM	50	50	21.90	21.52	21.41		
20	16QAM	100	0	22.00	21.61	21.51		
Channel				18675	18900	19125	Tune-up limit (dBm)	MPR (dB)
Frequency (MHz)				1857.5	1880	1902.5		
15	QPSK	1	0	23.13	23.39	23.10	24	0
15	QPSK	1	37	22.97	23.16	22.95		
15	QPSK	1	74	23.04	23.15	23.03		
15	QPSK	36	0	22.05	22.09	22.06	23	1
15	QPSK	36	20	21.99	22.00	21.99		
15	QPSK	36	39	22.08	22.06	21.97		
15	QPSK	75	0	22.03	22.03	22.01		
15	16QAM	1	0	22.38	22.40	22.35	23	1
15	16QAM	1	37	22.23	22.25	22.19		
15	16QAM	1	74	22.34	22.30	22.25		
15	16QAM	36	0	21.22	21.06	21.07	22	2
15	16QAM	36	20	21.21	21.04	20.98		
15	16QAM	36	39	21.40	21.08	20.98		
15	16QAM	75	0	21.47	21.03	21.03		
Channel				18650	18900	19150	Tune-up limit (dBm)	MPR (dB)
Frequency (MHz)				1855	1880	1905		
10	QPSK	1	0	23.05	23.10	23.02	24	0
10	QPSK	1	25	22.96	23.01	22.94		
10	QPSK	1	49	22.99	23.02	22.98		
10	QPSK	25	0	21.99	21.95	21.99	23	1
10	QPSK	25	12	21.97	21.95	21.94		
10	QPSK	25	25	21.99	21.96	21.91		
10	QPSK	50	0	22.00	21.99	21.97		
10	16QAM	1	0	22.20	22.30	22.27	23	1
10	16QAM	1	25	22.13	22.24	22.20		
10	16QAM	1	49	22.17	22.28	22.22		
10	16QAM	25	0	21.01	21.00	21.03	22	2
10	16QAM	25	12	21.16	21.00	20.98		
10	16QAM	25	25	21.11	21.01	20.94		
10	16QAM	50	0	21.23	21.00	20.98		

Channel				18625	18900	19175	Tune-up limit (dBm)	MPR (dB)
Frequency (MHz)				1852.5	1880	1907.5		
5	QPSK	1	0	22.97	23.03	22.92	24	0
5	QPSK	1	12	23.01	23.05	22.97		
5	QPSK	1	24	22.95	22.94	22.91		
5	QPSK	12	0	21.94	21.93	21.92	23	1
5	QPSK	12	7	21.97	21.97	21.95		
5	QPSK	12	13	21.96	21.97	21.92		
5	QPSK	25	0	21.95	21.96	21.94		
5	16QAM	1	0	22.15	22.23	22.17	23	1
5	16QAM	1	12	22.18	22.27	22.20		
5	16QAM	1	24	22.12	22.20	22.12		
5	16QAM	12	0	20.94	20.98	20.97	22	2
5	16QAM	12	7	20.97	21.02	20.99		
5	16QAM	12	13	21.01	21.02	20.96		
5	16QAM	25	0	20.96	20.98	20.95		
Channel				18615	18900	19185	Tune-up limit (dBm)	MPR (dB)
Frequency (MHz)				1851.5	1880	1908.5		
3	QPSK	1	0	23.02	23.06	22.96	24	0
3	QPSK	1	8	22.94	22.94	22.89		
3	QPSK	1	14	23.01	23.00	22.95		
3	QPSK	8	0	22.02	22.02	21.98	23	1
3	QPSK	8	4	22.01	22.01	21.97		
3	QPSK	8	7	22.00	22.01	21.96		
3	QPSK	15	0	22.03	22.02	22.00		
3	16QAM	1	0	22.18	22.27	22.20	23	1
3	16QAM	1	8	22.13	22.22	22.14		
3	16QAM	1	14	22.18	22.26	22.18		
3	16QAM	8	0	21.03	21.10	21.04	22	2
3	16QAM	8	4	21.02	21.09	21.03		
3	16QAM	8	7	21.03	21.08	21.02		
3	16QAM	15	0	21.09	21.07	21.03		
Channel				18607	18900	19193	Tune-up limit (dBm)	MPR (dB)
Frequency (MHz)				1850.7	1880	1909.3		
1.4	QPSK	1	0	22.84	22.84	22.78	24	0
1.4	QPSK	1	3	22.82	22.81	22.76		
1.4	QPSK	1	5	22.86	22.86	22.80		
1.4	QPSK	3	0	22.96	22.95	22.91		
1.4	QPSK	3	1	22.95	22.94	22.91		
1.4	QPSK	3	3	22.99	22.99	22.96		
1.4	QPSK	6	0	21.97	21.96	21.93	23	1
1.4	16QAM	1	0	22.11	22.20	22.07	23	1
1.4	16QAM	1	3	22.06	22.12	22.00		
1.4	16QAM	1	5	22.10	22.18	22.06		
1.4	16QAM	3	0	22.02	22.11	22.03		
1.4	16QAM	3	1	22.04	22.13	22.05		
1.4	16QAM	3	3	22.01	22.09	22.02		
1.4	16QAM	6	0	21.00	21.05	20.99	22	2

<LTE Band 5>

BW [MHz]	Modulation	RB Size	RB Offset	Power Low Ch. / Freq.	Power Middle Ch. / Freq.	Power High Ch. / Freq.	Tune-up limit (dBm)	MPR (dB)
Channel				20450	20525	20600		
Frequency (MHz)				829	836.5	844		
10	QPSK	1	0	23.93	23.98	23.94	24	0
10	QPSK	1	25	23.90	23.96	23.93		
10	QPSK	1	49	23.82	23.87	23.91		
10	QPSK	25	0	22.70	22.95	22.93	23	1
10	QPSK	25	12	22.73	22.83	22.92		
10	QPSK	25	25	22.79	22.79	22.94		
10	QPSK	50	0	22.78	22.95	22.88		
10	16QAM	1	0	22.81	22.99	22.95	23	1
10	16QAM	1	25	22.91	22.88	22.97		
10	16QAM	1	49	22.99	22.97	22.99		
10	16QAM	25	0	21.69	21.87	21.91	22	2
10	16QAM	25	12	21.75	21.80	21.90		
10	16QAM	25	25	21.80	21.76	21.90		
10	16QAM	50	0	21.76	21.82	21.92		
Channel				20425	20525	20625	Tune-up limit (dBm)	MPR (dB)
Frequency (MHz)				826.5	836.5	846.5		
5	QPSK	1	0	23.66	23.77	23.86	24	0
5	QPSK	1	12	23.71	23.81	23.96		
5	QPSK	1	24	23.69	23.79	23.97		
5	QPSK	12	0	22.64	22.81	22.87	23	1
5	QPSK	12	7	22.71	22.80	22.94		
5	QPSK	12	13	22.73	22.76	22.90		
5	QPSK	25	0	22.71	22.80	22.92		
5	16QAM	1	0	22.74	22.92	22.96	23	1
5	16QAM	1	12	22.86	22.91	23.04		
5	16QAM	1	24	22.88	22.88	22.94		
5	16QAM	12	0	21.64	21.80	21.87	22	2
5	16QAM	12	7	21.72	21.78	21.91		
5	16QAM	12	13	21.75	21.74	21.87		
5	16QAM	25	0	21.69	21.78	21.87		
Channel				20415	20525	20635	Tune-up limit (dBm)	MPR (dB)
Frequency (MHz)				825.5	836.5	847.5		
3	QPSK	1	0	23.70	23.81	23.95	24	0
3	QPSK	1	8	23.63	23.75	23.92		
3	QPSK	1	14	23.71	23.83	23.93		
3	QPSK	8	0	22.72	22.84	22.98	23	1
3	QPSK	8	4	22.71	22.82	22.99		
3	QPSK	8	7	22.71	22.82	22.99		
3	QPSK	15	0	22.77	22.88	22.93		
3	16QAM	1	0	22.76	22.94	22.93	23	1
3	16QAM	1	8	22.77	22.87	22.96		
3	16QAM	1	14	22.86	22.92	22.90		
3	16QAM	8	0	21.72	21.84	21.96	22	2
3	16QAM	8	4	21.73	21.81	21.95		
3	16QAM	8	7	21.74	21.80	21.93		
3	16QAM	15	0	21.75	21.85	21.99		

Channel				20407	20525	20643	Tune-up limit (dBm)	MPR (dB)
Frequency (MHz)				824.7	836.5	848.3		
1.4	QPSK	1	0	23.47	23.61	23.79	24	0
1.4	QPSK	1	3	23.47	23.57	23.76		
1.4	QPSK	1	5	23.49	23.64	23.84		
1.4	QPSK	3	0	23.57	23.75	23.93		
1.4	QPSK	3	1	23.63	23.75	23.96		
1.4	QPSK	3	3	23.67	23.78	23.97		
1.4	QPSK	6	0	22.67	22.78	22.96	23	1
1.4	16QAM	1	0	22.66	22.81	22.92	23	1
1.4	16QAM	1	3	22.62	22.77	22.84		
1.4	16QAM	1	5	22.68	22.81	22.90		
1.4	16QAM	3	0	22.62	22.75	22.87		
1.4	16QAM	3	1	22.66	22.78	22.91		
1.4	16QAM	3	3	22.62	22.73	22.85		
1.4	16QAM	6	0	21.67	21.79	21.92	22	2

<LTE Band 7>

BW [MHz]	Modulation	RB Size	RB Offset	Power Low Ch. / Freq.	Power Middle Ch. / Freq.	Power High Ch. / Freq.	Tune-up limit (dBm)	MPR (dB)
Channel				20850	21100	21350		
Frequency (MHz)				2510	2535	2560		
20	QPSK	1	0	24.00	23.60	23.56	24	0
20	QPSK	1	49	23.52	23.50	23.50		
20	QPSK	1	99	23.99	23.63	23.62		
20	QPSK	50	0	22.80	22.58	22.30	23	1
20	QPSK	50	24	22.31	22.47	22.35		
20	QPSK	50	50	22.31	22.39	22.32		
20	QPSK	100	0	22.25	22.50	22.20		
20	16QAM	1	0	22.61	22.94	22.70	23	1
20	16QAM	1	49	22.45	22.73	22.50		
20	16QAM	1	99	22.76	22.83	22.48		
20	16QAM	50	0	21.54	21.63	21.52	22	2
20	16QAM	50	24	22.00	21.53	21.60		
20	16QAM	50	50	21.77	21.64	21.58		
20	16QAM	100	0	21.39	21.56	21.27		
Channel				20825	21100	21375	Tune-up limit (dBm)	MPR (dB)
Frequency (MHz)				2507.5	2535	2562.5		
15	QPSK	1	0	23.28	23.53	23.17	24	0
15	QPSK	1	37	23.19	23.46	23.05		
15	QPSK	1	74	23.40	23.53	23.27		
15	QPSK	36	0	22.30	22.56	22.16	23	1
15	QPSK	36	20	22.29	22.50	22.14		
15	QPSK	36	39	22.35	22.47	22.13		
15	QPSK	75	0	22.32	22.50	22.13		
15	16QAM	1	0	22.47	22.82	22.36	23	1
15	16QAM	1	37	22.39	22.72	22.33		
15	16QAM	1	74	22.62	22.72	22.32		
15	16QAM	36	0	21.34	21.61	21.21	22	2
15	16QAM	36	20	21.32	21.57	21.19		
15	16QAM	36	39	21.40	21.51	21.17		
15	16QAM	75	0	21.37	21.56	21.20		
Channel				20800	21100	21400	Tune-up limit (dBm)	MPR (dB)
Frequency (MHz)				2505	2535	2565		
10	QPSK	1	0	23.16	23.42	23.04	24	0
10	QPSK	1	25	23.18	23.45	23.04		
10	QPSK	1	49	23.31	23.49	23.21		
10	QPSK	25	0	22.22	22.48	22.10	23	1
10	QPSK	25	12	22.22	22.48	22.11		
10	QPSK	25	25	22.25	22.40	22.03		
10	QPSK	50	0	22.26	22.48	22.11		
10	16QAM	1	0	22.33	22.67	22.26	23	1
10	16QAM	1	25	22.35	22.69	22.23		
10	16QAM	1	49	22.47	22.67	22.25		
10	16QAM	25	0	21.27	21.55	21.17	22	2
10	16QAM	25	12	21.27	21.54	21.16		
10	16QAM	25	25	21.31	21.46	21.08		
10	16QAM	50	0	21.28	21.50	21.14		

Channel				20775	21100	21425	Tune-up limit (dBm)	MPR (dB)
Frequency (MHz)				2502.5	2535	2567.5		
5	QPSK	1	0	23.16	23.41	23.03	24	0
5	QPSK	1	12	23.23	23.49	23.12		
5	QPSK	1	24	23.21	23.43	23.12		
5	QPSK	12	0	22.21	22.47	22.09	23	1
5	QPSK	12	7	22.24	22.49	22.09		
5	QPSK	12	13	22.22	22.43	22.04		
5	QPSK	25	0	22.33	22.46	22.10		
5	16QAM	1	0	22.35	22.68	22.37	23	1
5	16QAM	1	12	22.41	22.74	22.25		
5	16QAM	1	24	22.38	22.66	22.41		
5	16QAM	12	0	21.26	21.56	21.15	22	2
5	16QAM	12	7	21.30	21.58	21.14		
5	16QAM	12	13	21.29	21.53	21.08		
5	16QAM	25	0	21.28	21.54	21.13		

<Reduced Power Mode>

<LTE Band 2>

BW [MHz]	Modulation	RB Size	RB Offset	Power Low Ch. / Freq.	Power Middle Ch. / Freq.	Power High Ch. / Freq.	Tune-up limit (dBm)	MPR (dB)
Channel				18700	18900	19100		
Frequency (MHz)				1860	1880	1900		
20	QPSK	1	0	21.88	21.69	21.64	22	0
20	QPSK	1	49	21.44	21.39	21.42		
20	QPSK	1	99	21.54	21.56	21.53		
20	QPSK	50	0	21.51	21.49	21.46	22	0
20	QPSK	50	24	21.41	21.42	21.37		
20	QPSK	50	50	21.45	21.47	21.34		
20	QPSK	100	0	21.52	21.50	21.42		
20	16QAM	1	0	21.84	21.83	21.78	22	0
20	16QAM	1	49	21.68	21.65	21.58		
20	16QAM	1	99	21.85	21.81	21.72		
20	16QAM	50	0	21.04	21.00	20.97	22	0
20	16QAM	50	24	20.96	20.92	20.89		
20	16QAM	50	50	20.99	20.98	20.84		
20	16QAM	100	0	21.02	21.01	20.93		
Channel				18675	18900	19125	Tune-up limit (dBm)	MPR (dB)
Frequency (MHz)				1857.5	1880	1902.5		
15	QPSK	1	0	21.71	21.60	21.55	22	0
15	QPSK	1	37	21.52	21.43	21.39		
15	QPSK	1	74	21.58	21.51	21.47		
15	QPSK	36	0	21.59	21.45	21.45	22	0
15	QPSK	36	20	21.52	21.41	21.38		
15	QPSK	36	39	21.52	21.43	21.35		
15	QPSK	75	0	21.54	21.43	21.39		
15	16QAM	1	0	21.87	21.86	21.80	22	0
15	16QAM	1	37	21.72	21.67	21.60		
15	16QAM	1	74	21.79	21.76	21.65		
15	16QAM	36	0	21.01	20.98	20.95	22	0
15	16QAM	36	20	20.97	20.94	20.88		
15	16QAM	36	39	20.97	20.94	20.85		
15	16QAM	75	0	21.01	20.97	20.91		
Channel				18650	18900	19150	Tune-up limit (dBm)	MPR (dB)
Frequency (MHz)				1855	1880	1905		
10	QPSK	1	0	21.52	21.43	21.37	22	0
10	QPSK	1	25	21.42	21.35	21.29		
10	QPSK	1	49	21.44	21.37	21.34		
10	QPSK	25	0	21.44	21.33	21.33	22	0
10	QPSK	25	12	21.42	21.34	21.28		
10	QPSK	25	25	21.42	21.34	21.22		
10	QPSK	50	0	21.45	21.35	21.28		
10	16QAM	1	0	21.71	21.72	21.57	22	0
10	16QAM	1	25	21.63	21.64	21.48		
10	16QAM	1	49	21.68	21.68	21.50		
10	16QAM	25	0	20.92	20.87	20.84	22	0
10	16QAM	25	12	20.91	20.85	20.79		
10	16QAM	25	25	20.92	20.86	20.73		
10	16QAM	50	0	20.90	20.85	20.79		

Channel				18625	18900	19175	Tune-up limit (dBm)	MPR (dB)
Frequency (MHz)				1852.5	1880	1907.5		
5	QPSK	1	0	21.38	21.32	21.27	22	0
5	QPSK	1	12	21.41	21.36	21.31		
5	QPSK	1	24	21.33	21.30	21.25		
5	QPSK	12	0	21.32	21.27	21.24	22	0
5	QPSK	12	7	21.35	21.30	21.26		
5	QPSK	12	13	21.33	21.29	21.20		
5	QPSK	25	0	21.32	21.27	21.22		
5	16QAM	1	0	21.54	21.56	21.47	22	0
5	16QAM	1	12	21.58	21.64	21.50		
5	16QAM	1	24	21.53	21.56	21.44		
5	16QAM	12	0	20.82	20.80	20.73	22	0
5	16QAM	12	7	20.86	20.86	20.74		
5	16QAM	12	13	20.83	20.87	20.69		
5	16QAM	25	0	20.81	20.83	20.70		
Channel				18615	18900	19185	Tune-up limit (dBm)	MPR (dB)
Frequency (MHz)				1851.5	1880	1908.5		
3	QPSK	1	0	21.41	21.35	21.32	22	0
3	QPSK	1	8	21.33	21.32	21.25		
3	QPSK	1	14	21.38	21.39	21.30		
3	QPSK	8	0	21.39	21.37	21.30	22	0
3	QPSK	8	4	21.38	21.36	21.29		
3	QPSK	8	7	21.38	21.35	21.28		
3	QPSK	15	0	21.42	21.36	21.32		
3	16QAM	1	0	21.60	21.61	21.51	22	0
3	16QAM	1	8	21.55	21.55	21.45		
3	16QAM	1	14	21.60	21.61	21.49		
3	16QAM	8	0	20.93	20.93	20.85	22	0
3	16QAM	8	4	20.92	20.93	20.84		
3	16QAM	8	7	20.90	20.92	20.82		
3	16QAM	15	0	20.92	20.91	20.83		
Channel				18607	18900	19193	Tune-up limit (dBm)	MPR (dB)
Frequency (MHz)				1850.7	1880	1909.3		
1.4	QPSK	1	0	21.28	21.25	21.17	22	0
1.4	QPSK	1	3	21.25	21.22	21.15		
1.4	QPSK	1	5	21.29	21.26	21.19		
1.4	QPSK	3	0	21.39	21.33	21.26		
1.4	QPSK	3	1	21.38	21.33	21.26		
1.4	QPSK	3	3	21.41	21.38	21.30		
1.4	QPSK	6	0	21.38	21.33	21.26	22	0
1.4	16QAM	1	0	21.52	21.54	21.43	22	0
1.4	16QAM	1	3	21.46	21.48	21.37		
1.4	16QAM	1	5	21.52	21.53	21.41		
1.4	16QAM	3	0	21.52	21.48	21.37		
1.4	16QAM	3	1	21.56	21.51	21.37		
1.4	16QAM	3	3	21.51	21.48	21.35		
1.4	16QAM	6	0	20.95	20.91	20.82	22	0

<LTE Band 7>

BW [MHz]	Modulation	RB Size	RB Offset	Power Low Ch. / Freq.	Power Middle Ch. / Freq.	Power High Ch. / Freq.	Tune-up limit (dBm)	MPR (dB)
Channel				20850	21100	21350		
Frequency (MHz)				2510	2535	2560		
20	QPSK	1	0	21.18	21.37	21.15	21.5	0
20	QPSK	1	49	20.92	21.06	20.90		
20	QPSK	1	99	21.16	21.25	21.00		
20	QPSK	50	0	20.96	21.15	20.79	21.5	0
20	QPSK	50	24	20.81	21.02	20.66		
20	QPSK	50	50	20.95	20.95	20.73		
20	QPSK	100	0	20.97	21.06	20.73		
20	16QAM	1	0	21.26	21.30	21.32	21.5	0
20	16QAM	1	49	21.12	21.36	20.98		
20	16QAM	1	99	21.33	21.36	21.20		
20	16QAM	50	0	20.93	21.22	20.88	21.5	0
20	16QAM	50	24	20.89	21.09	20.75		
20	16QAM	50	50	21.13	21.01	20.76		
20	16QAM	100	0	21.06	21.14	20.82		
Channel				20825	21100	21375	Tune-up limit (dBm)	MPR (dB)
Frequency (MHz)				2507.5	2535	2562.5		
15	QPSK	1	0	20.91	21.15	20.76	21.5	0
15	QPSK	1	37	20.83	21.08	20.67		
15	QPSK	1	74	21.02	21.14	20.83		
15	QPSK	36	0	20.84	21.08	20.67	21.5	0
15	QPSK	36	20	20.83	21.03	20.65		
15	QPSK	36	39	20.91	20.99	20.65		
15	QPSK	75	0	20.87	21.02	20.64		
15	16QAM	1	0	21.20	21.36	21.08	21.5	0
15	16QAM	1	37	21.13	21.35	20.98		
15	16QAM	1	74	21.32	21.32	21.08		
15	16QAM	36	0	20.90	21.15	20.76	21.5	0
15	16QAM	36	20	20.88	21.09	20.73		
15	16QAM	36	39	20.97	21.06	20.73		
15	16QAM	75	0	20.95	21.11	20.74		
Channel				20800	21100	21400	Tune-up limit (dBm)	MPR (dB)
Frequency (MHz)				2505	2535	2565		
10	QPSK	1	0	20.78	21.01	20.62	21.5	0
10	QPSK	1	25	20.81	21.05	20.62		
10	QPSK	1	49	20.91	21.09	20.74		
10	QPSK	25	0	20.75	21.00	20.60	21.5	0
10	QPSK	25	12	20.76	20.97	20.60		
10	QPSK	25	25	20.80	20.91	20.52		
10	QPSK	50	0	20.80	20.97	20.60		
10	16QAM	1	0	21.06	21.33	20.97	21.5	0
10	16QAM	1	25	21.09	21.30	20.96		
10	16QAM	1	49	21.21	21.34	21.01		
10	16QAM	25	0	20.84	21.08	20.72	21.5	0
10	16QAM	25	12	20.85	21.06	20.70		
10	16QAM	25	25	20.89	21.00	20.62		
10	16QAM	50	0	20.86	21.03	20.68		

Channel				20775	21100	21425	Tune-up limit (dBm)	MPR (dB)
Frequency (MHz)				2502.5	2535	2567.5		
5	QPSK	1	0	20.62	20.98	20.54	21.5	0
5	QPSK	1	12	20.56	20.96	20.61		
5	QPSK	1	24	20.52	20.99	20.58		
5	QPSK	12	0	20.53	20.96	20.57	21.5	0
5	QPSK	12	7	20.56	20.99	20.58		
5	QPSK	12	13	20.71	20.94	20.52		
5	QPSK	25	0	20.75	20.93	20.55		
5	16QAM	1	0	21.06	21.31	20.86	21.5	0
5	16QAM	1	12	21.08	21.35	20.91		
5	16QAM	1	24	21.02	21.30	20.93		
5	16QAM	12	0	20.77	21.03	20.67	21.5	0
5	16QAM	12	7	20.83	21.06	20.67		
5	16QAM	12	13	20.83	21.02	20.60		
5	16QAM	25	0	20.78	21.01	20.64		

<LTE Carrier Aggregation>

General Note:

1. This device supports Carrier Aggregation on downlink only for intra band, Uplink CA is not supported. For the device supports bands and bandwidths and configurations are provided as follow table was according to 3GPP.

E-UTRA CA Configuration	Channel bandwidths for carrier [MHz]	Channel bandwidths for carrier [MHz]	Maximum aggregated bandwidth [MHz]	Bandwidth combinatio n set
CA_7C	15	15	40	0
	20	20		
	10	20	40	1
	15	15,20		
	20	10,15,20		
	15	10,15	40	2
	20	15,20		
CA_7A-7A	5	15	40	0
	10	10,15		
	15	15,20		
	20	20		
	5,10,15,20	5,10,15,20	40	1

LTE Carrier Aggregation Conducted Power

General Note:

i. According to KDB941225 D05A v01r02, Uplink maximum output power measurement with downlink carrier aggregation active should be measured, using the highest output channel measured without downlink carrier aggregation, to confirm that uplink maximum output power with downlink carrier aggregation active remains within the specified tune-up tolerance limits and not more than ¼ dB higher than the maximum output measured without downlink carrier aggregation active.

ii. Uplink maximum output power with downlink carrier aggregation active does not show more than ¼ dB higher than the maximum output power without downlink carrier aggregation active, therefore SAR evaluation with downlink carrier aggregation active can be excluded.

iii. The device supports downlink carrier aggregation only. Uplink carrier aggregation is not supported. For power measurement were control and acknowledge data is sent on uplink channels that operate identical to specifications when downlink carrier aggregation is inactive.

iv. Selected highest measured power when downlink carrier aggregation is inactive for conducted power comparison with downlink carrier aggregation is active, to confirm that when downlink carrier aggregation is active uplink maximum output power remains within the specified tune-up tolerance limits and not more than ¼ dB higher than the maximum output power measured when downlink carrier aggregation inactive.

v. For non-contiguous intra-band CA, the SCC selected to provide maximum separation from the PCC and must remain fully within the downlink transmission band. For SCC DL RB size and offset will base on the PCC corresponding RB allocation.

vi. For Intra-band, contiguous CA, the downlink channels selected to perform the uplink power measurement must satisfy 3GPP channel spacing (5.4.1A of 3GPP TS 36.521 or equivalent) and channel bandwidth (5.4.2A) requirements.

$$\text{Nominal channel spacing} = \left\lfloor \frac{BW_{Channel(1)} + BW_{Channel(2)} - 0.1\left|BW_{Channel(1)} - BW_{Channel(2)}\right|}{0.6} \right\rfloor 0.3 \ \ [\text{MHz}]$$

Configure		PCC							SCC				Power	
		LTE Band	BW (MHz)	UL Freq. (MHz)	UL Channel	Mod.	UL# RB	UL RB Offset	LTE Band	BW (MHz)	DL Freq. (MHz)	DL Channel	With CA Tx.Power (dBm)	W/O CA Tx.Power (dBm)
Intra-Band	Non-Contiguous	Band 7	20	2510	20850	QPSK	1	0	Band 7	5	2687.5	3425	23.98	24.00
	Contiguous	Band 7	20	2510	20850	QPSK	1	0	Band 7	20	2649.8	3048	23.99	24.00

<WLAN Conducted Power>

General Note:

1. Per KDB 248227 D01v02r02, SAR test reduction is determined according to 802.11 transmission mode configurations and certain exposure conditions with multiple test positions. In the 2.4 GHz band, separate SAR procedures are applied to DSSS and OFDM configurations to simplify DSSS test requirements. For OFDM, in both 2.4 and 5 GHz bands, an initial test configuration must be determined for each standalone and aggregated frequency band, according to the transmission mode configuration with the highest maximum output power specified for production units to perform SAR measurements. If the same highest maximum output power applies to different combinations of channel bandwidths, modulations and data rates, additional procedures are applied to determine which test configurations require SAR measurement. When applicable, an initial test position may be applied to reduce the number of SAR measurements required for next to the ear, UMPC mini-tablet or hotspot mode configurations with multiple test positions.
2. For 2.4 GHz 802.11b DSSS, either the initial test position procedure for multiple exposure test positions or the DSSS procedure for fixed exposure position is applied; these are mutually exclusive. For 2.4 GHz and 5 GHz OFDM configurations, the initial test configuration is applied to measure SAR using either the initial test position procedure for multiple exposure test position configurations or the initial test configuration procedures for fixed exposure test conditions. Based on the reported SAR of the measured configurations and maximum output power of the transmission mode configurations that are not included in the initial test configuration, the subsequent test configuration and initial test position procedures are applied to determine if SAR measurements are required for the remaining OFDM transmission configurations. In general, the number of test channels that require SAR measurement is minimized based on maximum output power measured for the test sample(s).
3. For OFDM transmission configurations in the 2.4 GHz and 5 GHz bands, When the same maximum power is specified for multiple transmission modes in a frequency band, the largest channel bandwidth, lowest order modulation, lowest data rate and lowest order 802.11a/g/n/ac mode is used for SAR measurement, on the highest measured output power channel for each frequency band.
4. DSSS and OFDM configurations are considered separately according to the required SAR procedures. SAR is measured in the initial test position using the 802.11 transmission mode configuration required by the DSSS procedure or initial test configuration and subsequent test configuration(s) according to the OFDM procedures.18 The initial test position procedure is described in the following:
   a. When the reported SAR of the initial test position is ≤ 0.4 W/kg, further SAR measurement is not required for the other test positions in that exposure configuration and 802.11 transmission mode combinations within the frequency band or aggregated band.
   b. When the reported SAR of the test position is > 0.4 W/kg, SAR is repeated for the 802.11 transmission mode configuration tested in the initial test position to measure the subsequent next closet/smallest test separation distance and maximum coupling test position on the highest maximum output power channel, until the report SAR is ≤ 0.8 W/kg or all required test position are tested.
   c. For all positions/configurations, when the reported SAR is > 0.8 W/kg, SAR is measured for these test positions/configurations on the subsequent next highest measured output power channel(s) until the reported SAR is ≤ 1.2 W/kg or all required channels are tested.

<2.4GHz WLAN>

	Mode	Channel	Frequency (MHz)	Data Rate	Average power (dBm)	Tune-Up Limit	Duty Cycle %
2.4GHz WLAN	802.11b	CH 1	2412	1Mbps	16.36	16.50	100.00
		CH 6	2437		16.41	16.50	
		CH 11	2462		16.27	16.50	
	802.11g	CH 1	2412	6Mbps	13.88	14.00	96.53
		CH 6	2437		14.63	15.00	
		CH 11	2462		14.81	15.00	
	802.11n-HT20	CH 1	2412	MCS0	13.04	13.50	97.02
		CH 6	2437		13.42	13.50	
		CH 11	2462		13.89	14.00	

<5GHz WLAN>

	Mode	Channel	Frequency (MHz)	Data Rate	Average power (dBm)	Tune-Up Limit	Duty Cycle %
5.2GHz WLAN	802.11a	CH 36	5180	6Mbps	14.87	15.00	96.53
		CH 40	5200		14.86	15.00	
		CH 44	5220		14.85	15.00	
		CH 48	5240		14.84	15.00	
	802.11n-HT20	CH 36	5180	MCS0	14.92	15.00	96.65
		CH 40	5200		14.91	15.00	
		CH 44	5220		14.90	15.00	
		CH 48	5240		14.89	15.00	
	802.11n-HT40	CH 38	5190	MCS0	12.44	12.50	94.20
		CH 46	5230		12.42	12.50	

	Mode	Channel	Frequency (MHz)	Data Rate	Average power (dBm)	Tune-Up Limit	Duty Cycle %
5.3GHz WLAN	802.11a	CH 52	5260	6Mbps	14.90	15.00	96.53
		CH 56	5280		14.84	15.00	
		CH 60	5300		14.80	15.00	
		CH 64	5320		14.76	15.00	
	802.11n-HT20	CH 52	5260	MCS0	14.90	15.00	96.65
		CH 56	5280		14.87	15.00	
		CH 60	5300		14.84	15.00	
		CH 64	5320		14.81	15.00	
	802.11n-HT40	CH 54	5270	MCS0	12.38	12.50	94.20
		CH 62	5310		12.34	12.50	

	Mode	Channel	Frequency (MHz)	Data Rate	Average power (dBm)	Tune-Up Limit	Duty Cycle %
5.5GHz WLAN	802.11a	CH 100	5500	6Mbps	14.95	15.00	96.53
		CH 116	5580		14.96	15.00	
		CH 132	5660		14.85	15.00	
		CH 144	5720		14.93	15.00	
	802.11n-HT20	CH 100	5500	MCS0	14.99	15.00	96.65
		CH 116	5580		14.97	15.00	
		CH 132	5660		14.85	15.00	
		CH 144	5720		14.82	15.00	
	802.11n-HT40	CH 102	5510	MCS0	12.48	12.50	94.20
		CH 110	5550		12.43	12.50	
		CH 134	5670		12.29	12.50	
		CH 142	5710		12.40	12.50	

	Mode	Channel	Frequency (MHz)	Data Rate	Average power (dBm)	Tune-Up Limit	Duty Cycle %
5.8GHz WLAN	802.11a	CH 149	5745	MCS0	14.96	15.00	96.53
		CH 157	5785		14.91	15.00	
		CH 165	5825		14.90	15.00	
	802.11n-HT20	CH 149	5745	MCS0	14.82	15.00	96.65
		CH 157	5785		14.80	15.00	
		CH 165	5825		14.37	14.50	
	802.11n-HT40	CH 151	5755	MCS0	11.44	11.50	94.20
		CH 159	5795		11.41	11.50	

13. Bluetooth Exclusions Applied

Mode Band	Average power(dBm)	
	BR/EDR	LE
2.4GHz Bluetooth	6.75	0

Note:

1. Per KDB 447498 D01v06, the 1-g and 10-g SAR test exclusion thresholds for 100 MHz to 6 GHz at *test separation distances* ≤ 50 mm are determined by:
   [(*max. power of channel, including tune-up tolerance, mW*)/(*min. test separation distance, mm*)] ·[√f(GHz)] ≤ 3.0 for 1-g SAR and ≤ 7.5 for 10-g extremity SAR
   - f(GHz) is the RF channel transmit frequency in GHz
   - Power and distance are rounded to the nearest mW and mm before calculation
   - The result is rounded to one decimal place for comparison

Bluetooth Max Power (dBm)	Separation Distance (mm)	Frequency (GHz)	exclusion thresholds
6.75	15	2.48	0.52

Note:

Per KDB 447498 D01v06, when the minimum test separation distance is 15 mm which is applied to determine SAR test exclusion. The test exclusion threshold is 0.52 which is <= 3, SAR testing is not required.

14. RF Exposure Conditions

Distance of the Antenna to the EUT surface/edge						
Antennas	Back	Front	Top Side	Bottom Side	Right Side	Left Side
WWAN Main	≤ 25mm	≤ 25mm	>25mm	≤ 25mm	≤ 25mm	≤ 25mm
BT&WLAN	≤ 25mm	≤ 25mm	≤ 25mm	>25mm	≤ 25mm	>25mm

Positions for SAR tests; Hotspot mode						
Antennas	Back	Front	Top Side	Bottom Side	Right Side	Left Side
WWAN Main	Yes	Yes	No	Yes	Yes	Yes
BT&WLAN	Yes	Yes	Yes	No	Yes	No

General Note:

1. Referring to KDB 941225 D06 v02r01, when the overall device length and width are ≥ 9cm*5cm, the test distance is 10 mm. SAR must be measured for all sides and surfaces with a transmitting antenna located within 25mm from that surface or edge
2. The detail antenna location please refers to Appendix D.

15. SAR Test Results

General Note:

1. Per KDB 447498 D01v06, the reported SAR is the measured SAR value adjusted for maximum tune-up tolerance.
   a. Tune-up scaling Factor = tune-up limit power (mW) / EUT RF power (mW), where tune-up limit is the maximum rated power among all production units.
   b. For SAR testing of WLAN signal with non-100% duty cycle, the measured SAR is scaled-up by the duty cycle scaling factor which is equal to "1/(duty cycle)"
   c. For WWAN: Reported SAR(W/kg)= Measured SAR(W/kg)*Tune-up Scaling Factor
   d. For WLAN: Reported SAR(W/kg)= Measured SAR(W/kg)* Duty Cycle scaling factor * Tune-up scaling factor
2. Per KDB 447498 D01v06, for each exposure position, testing of other required channels within the operating mode of a frequency band is not required when the *reported* 1-g or 10-g SAR for the mid-band or highest output power channel is:
   - ≤ 0.8 W/kg or 2.0 W/kg, for 1-g or 10-g respectively, when the transmission band is ≤ 100 MHz
   - ≤ 0.6 W/kg or 1.5 W/kg, for 1-g or 10-g respectively, when the transmission band is between 100 MHz and 200 MHz
   - ≤ 0.4 W/kg or 1.0 W/kg, for 1-g or 10-g respectively, when the transmission band is ≥ 200 MHz
3. Per KDB 865664 D01v01r04, for each frequency band, repeated SAR measurement is required only when the measured SAR is ≥0.8W/kg.
4. When hotspot mode is enabled, power reduction will be activated to limit the maximum power of UMTS B2, and LTE B2 / B7.
5. Per KDB 648474 D04v01r03, when the reported SAR for a body-worn accessory measured without a headset connected to the handset is ≤ 1.2 W/kg, SAR testing with a headset connected to the handset is not required.
6. According to TCB workshop October 2016, when the highest reported SAR of an antenna is > 1.2 W/kg, holder perturbation verification is required for each antenna, using the highest SAR configuration among all applicable frequency bands, the detail information can refer to section 15.5.
7. For the body SAR measurement was used a low-loss foam block performed testing, the relative permittivity and loss tangent of the foam material is 1.0 and 10^{-5}, respectively, therefore holder perturbation verification is not required even highest reported SAR is >1.2W/kg.
8. In this report, the 10g SAR results which is submitted voluntarily.

GSM Note:

1. Per KDB 941225 D01v03r01, for SAR test reduction for GSM / GPRS / EDGE modes is determined by the source-based time-averaged output power including tune-up tolerance. The mode with highest specified time-averaged output power should be tested for SAR compliance in the applicable exposure conditions. For modes with the same specified maximum output power and tolerance, the higher number time-slot configuration should be tested. Therefore, the GPRS (4Tx slots) for GSM850 and GPRS (3Tx slots) for GSM1900 are considered as the primary mode.
2. Other configurations of GSM / GPRS / EDGE are considered as secondary modes. The 3G SAR test reduction procedure is applied, when the maximum output power and tune-up tolerance specified for production units in a secondary mode is ≤ ¼ dB higher than the primary mode, SAR measurement is not required for the secondary mode.

UMTS Note:

1. Per KDB 941225 D01v03r01, for SAR testing is measured using a 12.2 kbps RMC with TPC bits configured to all “1’s”.
2. Per KDB 941225 D01v03r01, RMC 12.2kbps setting is used to evaluate SAR. If the maximum output power and tune-up tolerance specified for production units in HSDPA / HSUPA / DC-HSDPA is ≤ ¼ dB higher than RMC 12.2Kbps or when the highest reported SAR of the RMC12.2Kbps is scaled by the ratio of specified maximum output power and tune-up tolerance of HSDPA / HSUPA / DC-HSDPA to RMC12.2Kbps and the adjusted SAR is ≤ 1.2 W/kg, SAR measurement is not required for HSDPA / HSUPA / DC-HSDPA.

LTE Note:

1. Per KDB 941225 D05v02r05, start with the largest channel bandwidth and measure SAR for QPSK with 1 RB allocation, using the RB offset and required test channel combination with the highest maximum output power for RB offsets at the upper edge, middle and lower edge of each required test channel.
2. Per KDB 941225 D05v02r05, 50% RB allocation for QPSK SAR testing follows 1RB QPSK allocation procedure.
3. Per KDB 941225 D05v02r05, For QPSK with 100% RB allocation, SAR is not required when the highest maximum output power for 100 % RB allocation is less than the highest maximum output power in 50% and 1 RB allocations and the highest reported SAR for 1 RB and 50% RB allocation are ≤ 0.8 W/kg. Otherwise, SAR is measured for the highest output power channel; and if the reported SAR is > 1.45 W/kg, the remaining required test channels must also be tested.
4. Per KDB 941225 D05v02r05, 16QAM output power for each RB allocation configuration is > not ½ dB higher than the same configuration in QPSK and the reported SAR for the QPSK configuration is ≤ 1.45 W/kg; Per KDB 941225 D05v02r05, 16QAM SAR testing is not required.
5. Per KDB 941225 D05v02r05, Smaller bandwidth output power for each RB allocation configuration is > not ½ dB higher than the same configuration in the largest supported bandwidth, and the reported SAR for the largest supported bandwidth is ≤ 1.45 W/kg; Per KDB 941225 D05v02r05, smaller bandwidth SAR testing is not required.
6. For LTE B5 the maximum bandwidth does not support three non-overlapping channels, per KDB 941225 D05v02r05, when a device supports overlapping channel assignment in a channel bandwidth configuration, the middle channel of the group of overlapping channels should be selected for testing.

WLAN Note:

1. Per KDB 248227 D01v02r02, for 2.4GHz 802.11g/n SAR testing is not required when the highest reported SAR for DSSS is adjusted by the ratio of OFDM to DSSS specified maximum output power and the adjusted SAR is ≤ 1.2 W/kg.
2. Per KDB 248227 D01v02r02, U-NII-1 SAR testing is not required when the U-NII-2A band highest reported SAR for a test configuration is ≤ 1.2 W/kg, SAR is not required for U-NII-1 band.
3. When the reported SAR of the test position is > 0.4 W/kg, SAR is repeated for the 802.11 transmission mode configuration tested in the initial test position to measure the subsequent next closet/smallest test separation distance and maximum coupling test position on the highest maximum output power channel, until the report SAR is ≤ 0.8 W/kg or all required test position are tested.
4. For all positions / configurations, when the reported SAR is > 0.8 W/kg, SAR is measured for these test positions / configurations on the subsequent next highest measured output power channel(s) until the reported SAR is ≤ 1.2 W/kg or all required channels are tested.
5. During SAR testing the WLAN transmission was verified using a spectrum analyzer.

15.1 Head SAR

<GSM SAR>

Plot No.	Band	Modulation	Mode	Test Position	Gap (mm)	Ch.	Freq. (MHz)	Average Power (dBm)	Tune-Up Limit (dBm)	Tune-up Scaling Factor	Power Drift (dB)	Measured 1g SAR (W/kg)	Reported 1g SAR (W/kg)	Measured 10g SAR (W/kg)	Reported 10g SAR (W/kg)
	GSM850	GMSK	GPRS (4 Tx slots)	Right Cheek	0mm	251	848.8	27.96	28.00	1.009	0.13	0.242	0.244	0.196	0.198
	GSM850	GMSK	GPRS (4 Tx slots)	Right Tilted	0mm	251	848.8	27.96	28.00	1.009	0.17	0.115	0.116	0.095	0.096
01	GSM850	GMSK	GPRS (4 Tx slots)	Left Cheek	0mm	251	848.8	27.96	28.00	1.009	-0.17	0.280	0.283	0.219	0.221
	GSM850	GMSK	GPRS (4 Tx slots)	Left Tilted	0mm	251	848.8	27.96	28.00	1.009	-0.05	0.137	0.138	0.110	0.111
	GSM1900	GMSK	GPRS (3 Tx slots)	Right Cheek	0mm	810	1909.8	25.96	26.50	1.132	-0.14	0.109	0.123	0.070	0.079
	GSM1900	GMSK	GPRS (3 Tx slots)	Right Tilted	0mm	810	1909.8	25.96	26.50	1.132	0.15	0.061	0.069	0.038	0.043
02	GSM1900	GMSK	GPRS (3 Tx slots)	Left Cheek	0mm	810	1909.8	25.96	26.50	1.132	-0.11	0.122	0.138	0.082	0.093
	GSM1900	GMSK	GPRS (3 Tx slots)	Left Tilted	0mm	810	1909.8	25.96	26.50	1.132	0.1	0.039	0.044	0.025	0.028

<WCDMA SAR>

Plot No.	Band	Modulation	Mode	Test Position	Gap (mm)	Ch.	Freq. (MHz)	Average Power (dBm)	Tune-Up Limit (dBm)	Tune-up Scaling Factor	Power Drift (dB)	Measured 1g SAR (W/kg)	Reported 1g SAR (W/kg)	Measured 10g SAR (W/kg)	Reported 10g SAR (W/kg)
	WCDMA II	QPSK	RMC 12.2Kbps	Right Cheek	0mm	9538	1907.6	23.85	24.00	1.035	-0.13	0.186	0.193	0.120	0.124
	WCDMA II	QPSK	RMC 12.2Kbps	Right Tilted	0mm	9538	1907.6	23.85	24.00	1.035	0.04	0.118	0.122	0.073	0.076
03	WCDMA II	QPSK	RMC 12.2Kbps	Left Cheek	0mm	9538	1907.6	23.85	24.00	1.035	-0.01	0.228	0.236	0.151	0.156
	WCDMA II	QPSK	RMC 12.2Kbps	Left Tilted	0mm	9538	1907.6	23.85	24.00	1.035	0.09	0.079	0.082	0.047	0.049
	WCDMA V	QPSK	RMC 12.2Kbps	Right Cheek	0mm	4132	826.4	24.40	24.50	1.023	-0.03	0.190	0.194	0.151	0.155
	WCDMA V	QPSK	RMC 12.2Kbps	Right Tilted	0mm	4132	826.4	24.40	24.50	1.023	0.02	0.092	0.094	0.075	0.077
04	WCDMA V	QPSK	RMC 12.2Kbps	Left Cheek	0mm	4132	826.4	24.40	24.50	1.023	-0.02	0.214	0.219	0.170	0.174
	WCDMA V	QPSK	RMC 12.2Kbps	Left Tilted	0mm	4132	826.4	24.40	24.50	1.023	-0.05	0.117	0.120	0.094	0.096

<LTE SAR>

Plot No.	Band	BW (MHz)	Modulation	RB Size	RB offset	Test Position	Gap (mm)	Ch.	Freq. (MHz)	Average Power (dBm)	Tune-Up Limit (dBm)	Tune-up Scaling Factor	Power Drift (dB)	Measured 1g SAR (W/kg)	Reported 1g SAR (W/kg)	Measured 10g SAR (W/kg)	Reported 10g SAR (W/kg)
05	LTE Band 2	20M	QPSK	1	0	Right Cheek	0mm	18700	1860	24.00	24.00	1.000	-0.12	0.276	0.276	0.181	0.181
	LTE Band 2	20M	QPSK	50	0	Right Cheek	0mm	18700	1860	23.00	23.00	1.000	-0.15	0.208	0.208	0.135	0.135
	LTE Band 2	20M	QPSK	1	0	Right Tilted	0mm	18700	1860	24.00	24.00	1.000	0.04	0.133	0.133	0.083	0.083
	LTE Band 2	20M	QPSK	50	0	Right Tilted	0mm	18700	1860	23.00	23.00	1.000	0.16	0.109	0.109	0.068	0.068
	LTE Band 2	20M	QPSK	1	0	Left Cheek	0mm	18700	1860	24.00	24.00	1.000	-0.06	0.238	0.238	0.159	0.159
	LTE Band 2	20M	QPSK	50	0	Left Cheek	0mm	18700	1860	23.00	23.00	1.000	-0.06	0.184	0.184	0.123	0.123
	LTE Band 2	20M	QPSK	1	0	Left Tilted	0mm	18700	1860	24.00	24.00	1.000	-0.07	0.131	0.131	0.079	0.079
	LTE Band 2	20M	QPSK	50	0	Left Tilted	0mm	18700	1860	23.00	23.00	1.000	0.17	0.109	0.109	0.065	0.065
	LTE Band 5	10M	QPSK	1	0	Right Cheek	0mm	20525	836.5	23.98	24.00	1.005	-0.07	0.185	0.186	0.148	0.149
	LTE Band 5	10M	QPSK	25	0	Right Cheek	0mm	20525	836.5	22.95	23.00	1.012	-0.05	0.158	0.160	0.126	0.127
	LTE Band 5	10M	QPSK	1	0	Right Tilted	0mm	20525	836.5	23.98	24.00	1.005	0.04	0.093	0.093	0.076	0.076
	LTE Band 5	10M	QPSK	25	0	Right Tilted	0mm	20525	836.5	22.95	23.00	1.012	0.13	0.080	0.081	0.065	0.066
06	LTE Band 5	10M	QPSK	1	0	Left Cheek	0mm	20525	836.5	23.98	24.00	1.005	-0.08	0.199	0.200	0.159	0.160
	LTE Band 5	10M	QPSK	25	0	Left Cheek	0mm	20525	836.5	22.95	23.00	1.012	-0.14	0.173	0.175	0.137	0.139
	LTE Band 5	10M	QPSK	1	0	Left Tilted	0mm	20525	836.5	23.98	24.00	1.005	-0.15	0.100	0.100	0.080	0.080
	LTE Band 5	10M	QPSK	25	0	Left Tilted	0mm	20525	836.5	22.95	23.00	1.012	-0.03	0.086	0.087	0.068	0.069
07	LTE Band 7	20M	QPSK	1	0	Right Cheek	0mm	20850	2510	24.00	24.00	1.000	0.19	0.251	0.251	0.135	0.135
	LTE Band 7	20M	QPSK	50	0	Right Cheek	0mm	20850	2510	22.80	23.00	1.047	-0.12	0.203	0.213	0.108	0.113
	LTE Band 7	20M	QPSK	1	0	Right Tilted	0mm	20850	2510	24.00	24.00	1.000	0.15	0.040	0.040	0.009	0.009
	LTE Band 7	20M	QPSK	50	0	Right Tilted	0mm	20850	2510	22.80	23.00	1.047	0.11	0.036	0.038	0.011	0.012
	LTE Band 7	20M	QPSK	1	0	Left Cheek	0mm	20850	2510	24.00	24.00	1.000	0.14	0.128	0.128	0.058	0.058
	LTE Band 7	20M	QPSK	50	0	Left Cheek	0mm	20850	2510	22.80	23.00	1.047	0.18	0.087	0.091	0.027	0.028
	LTE Band 7	20M	QPSK	1	0	Left Tilted	0mm	20850	2510	24.00	24.00	1.000	-0.16	0.087	0.087	0.046	0.046
	LTE Band 7	20M	QPSK	50	0	Left Tilted	0mm	20850	2510	22.80	23.00	1.047	0.18	0.071	0.074	0.037	0.039

<WLAN SAR>

Plot No.	Band	Modulation	Mode	Test Position	Gap (mm)	Ch.	Freq. (MHz)	Average Power (dBm)	Tune-Up Limit (dBm)	Tune-up Scaling Factor	Duty Cycle %	Duty Cycle Scaling Factor	Power Drift (dB)	Measured 1g SAR (W/kg)	Reported 1g SAR (W/kg)	Measured 10g SAR (W/kg)	Reported 10g SAR (W/kg)
	WLAN2.4GHz	DSSS	802.11b 1Mbps	Right Cheek	0mm	6	2437	16.41	16.50	1.021	100	1.000	-0.06	1.020	1.041	0.476	0.486
	WLAN2.4GHz	DSSS	802.11b 1Mbps	Right Cheek	0mm	1	2412	16.36	16.50	1.033	100	1.000	-0.03	1.020	1.053	0.483	0.499
	WLAN2.4GHz	DSSS	802.11b 1Mbps	Right Cheek	0mm	11	2462	16.27	16.50	1.054	100	1.000	-0.01	0.975	1.028	0.456	0.481
	WLAN2.4GHz	DSSS	802.11b 1Mbps	Right Tilted	0mm	6	2437	16.41	16.50	1.021	100	1.000	0.01	0.968	0.988	0.464	0.474
	WLAN2.4GHz	DSSS	802.11b 1Mbps	Right Tilted	0mm	1	2412	16.36	16.50	1.033	100	1.000	-0.11	0.962	0.994	0.466	0.481
	WLAN2.4GHz	DSSS	802.11b 1Mbps	Right Tilted	0mm	11	2462	16.27	16.50	1.054	100	1.000	-0.13	0.845	0.891	0.408	0.430
	WLAN2.4GHz	DSSS	802.11b 1Mbps	Left Cheek	0mm	6	2437	16.41	16.50	1.021	100	1.000	-0.04	1.190	1.215	0.506	0.517
08	WLAN2.4GHz	DSSS	802.11b 1Mbps	Left Cheek	0mm	1	2412	16.36	16.50	1.033	100	1.000	0	1.240	1.281	0.526	0.543
	WLAN2.4GHz	DSSS	802.11b 1Mbps	Left Cheek	0mm	11	2462	16.27	16.50	1.054	100	1.000	-0.05	1.160	1.223	0.487	0.513
	WLAN2.4GHz	DSSS	802.11b 1Mbps	Left Tilted	0mm	6	2437	16.41	16.50	1.021	100	1.000	0.01	1.050	1.072	0.463	0.473
	WLAN2.4GHz	DSSS	802.11b 1Mbps	Left Tilted	0mm	1	2412	16.36	16.50	1.033	100	1.000	-0.11	1.060	1.095	0.477	0.493
	WLAN2.4GHz	DSSS	802.11b 1Mbps	Left Tilted	0mm	11	2462	16.27	16.50	1.054	100	1.000	-0.04	0.979	1.032	0.437	0.461
	WLAN5GHz	OFDM	802.11a 6Mbps	Right Cheek	0mm	52	5260	14.90	15.00	1.022	96.53	1.036	0.19	0.994	1.053	0.297	0.315
	WLAN5GHz	OFDM	802.11a 6Mbps	Right Cheek	0mm	56	5280	14.84	15.00	1.038	96.53	1.036	0.11	0.995	1.070	0.307	0.330
	WLAN5GHz	OFDM	802.11a 6Mbps	Right Tilted	0mm	52	5260	14.90	15.00	1.022	96.53	1.036	-0.1	0.856	0.907	0.276	0.292
	WLAN5GHz	OFDM	802.11a 6Mbps	Right Tilted	0mm	56	5280	14.84	15.00	1.038	96.53	1.036	-0.15	0.705	0.758	0.239	0.257
09	WLAN5GHz	OFDM	802.11a 6Mbps	Left Cheek	0mm	52	5260	14.90	15.00	1.022	96.53	1.036	-0.15	1.120	1.186	0.333	0.353
	WLAN5GHz	OFDM	802.11a 6Mbps	Left Cheek	0mm	56	5280	14.84	15.00	1.038	96.53	1.036	-0.11	0.989	1.063	0.315	0.339
	WLAN5GHz	OFDM	802.11a 6Mbps	Left Tilted	0mm	52	5260	14.90	15.00	1.022	96.53	1.036	-0.11	0.885	0.937	0.268	0.284
	WLAN5GHz	OFDM	802.11a 6Mbps	Left Tilted	0mm	56	5280	14.84	15.00	1.038	96.53	1.036	-0.13	0.847	0.910	0.231	0.248
	WLAN5GHz	OFDM	802.11a 6Mbps	Right Cheek	0mm	116	5580	14.96	15.00	1.009	96.53	1.036	-0.15	0.411	0.430	0.175	0.183
	WLAN5GHz	OFDM	802.11a 6Mbps	Right Tilted	0mm	116	5580	14.96	15.00	1.009	96.53	1.036	0.13	0.315	0.329	0.108	0.113
	WLAN5GHz	OFDM	802.11a 6Mbps	Left Cheek	0mm	116	5580	14.96	15.00	1.009	96.53	1.036	-0.17	0.565	0.591	0.202	0.211
	WLAN5GHz	OFDM	802.11a 6Mbps	Left Cheek	0mm	100	5500	14.95	15.00	1.011	96.53	1.036	0.14	0.483	0.506	0.169	0.177
10	WLAN5GHz	OFDM	802.11a 6Mbps	Left Cheek	0mm	132	5660	14.85	15.00	1.035	96.53	1.036	0	0.771	0.827	0.253	0.271
	WLAN5GHz	OFDM	802.11a 6Mbps	Left Cheek	0mm	144	5720	14.93	15.00	1.016	96.53	1.036	0.03	0.660	0.695	0.219	0.231
	WLAN5GHz	OFDM	802.11a 6Mbps	Left Tilted	0mm	116	5580	14.96	15.00	1.009	96.53	1.036	-0.14	0.534	0.558	0.165	0.173
	WLAN5GHz	OFDM	802.11a 6Mbps	Right Cheek	0mm	149	5745	14.96	15.00	1.009	96.53	1.036	-0.06	0.504	0.527	0.201	0.210
	WLAN5GHz	OFDM	802.11a 6Mbps	Right Tilted	0mm	149	5745	14.96	15.00	1.009	96.53	1.036	0.09	0.514	0.537	0.185	0.193
11	WLAN5GHz	OFDM	802.11a 6Mbps	Left Cheek	0mm	149	5745	14.96	15.00	1.009	96.53	1.036	-0.17	0.705	0.737	0.242	0.253
	WLAN5GHz	OFDM	802.11a 6Mbps	Left Cheek	0mm	157	5785	14.91	15.00	1.021	96.53	1.036	-0.11	0.480	0.508	0.155	0.164
	WLAN5GHz	OFDM	802.11a 6Mbps	Left Cheek	0mm	165	5825	14.90	15.00	1.023	96.53	1.036	0.05	0.456	0.483	0.147	0.156
	WLAN5GHz	OFDM	802.11a 6Mbps	Left Tilted	0mm	149	5745	14.96	15.00	1.009	96.53	1.036	-0.17	0.556	0.581	0.163	0.170

15.2 Hotspot SAR

<GSM SAR>

Plot No.	Band	Modulation	Mode	Test Position	Gap (mm)	Power Reduction	Ch.	Freq. (MHz)	Average Power (dBm)	Tune-Up Limit (dBm)	Tune-up Scaling Factor	Power Drift (dB)	Measured 1g SAR (W/kg)	Reported 1g SAR (W/kg)	Measured 10g SAR (W/kg)	Reported 10g SAR (W/kg)
	GSM850	GMSK	GPRS (4 Tx slots)	Front	10mm	OFF	251	848.8	27.96	28.00	1.009	-0.14	0.350	0.353	0.281	0.284
	GSM850	GMSK	GPRS (4 Tx slots)	Back	10mm	OFF	251	848.8	27.96	28.00	1.009	-0.19	0.396	0.400	0.318	0.321
12	GSM850	GMSK	GPRS (4 Tx slots)	Left Side	10mm	OFF	251	848.8	27.96	28.00	1.009	-0.03	0.504	0.509	0.357	0.360
	GSM850	GMSK	GPRS (4 Tx slots)	Right Side	10mm	OFF	251	848.8	27.96	28.00	1.009	0.01	0.440	0.444	0.305	0.308
	GSM850	GMSK	GPRS (4 Tx slots)	Bottom Side	10mm	OFF	251	848.8	27.96	28.00	1.009	-0.01	0.251	0.253	0.153	0.154
	GSM1900	GMSK	GPRS (3 Tx slots)	Front	10mm	OFF	810	1909.8	25.96	26.50	1.132	0.03	0.475	0.538	0.271	0.307
	GSM1900	GMSK	GPRS (3 Tx slots)	Back	10mm	OFF	810	1909.8	25.96	26.50	1.132	0.01	0.726	0.822	0.400	0.453
	GSM1900	GMSK	GPRS (3 Tx slots)	Back	10mm	OFF	512	1850.2	25.26	26.50	1.330	0.04	0.749	0.997	0.422	0.561
	GSM1900	GMSK	GPRS (3 Tx slots)	Back	10mm	OFF	661	1880	25.69	26.50	1.205	0.01	0.738	0.889	0.411	0.495
	GSM1900	GMSK	GPRS (3 Tx slots)	Left Side	10mm	OFF	810	1909.8	25.96	26.50	1.132	-0.16	0.243	0.275	0.140	0.159
	GSM1900	GMSK	GPRS (3 Tx slots)	Right Side	10mm	OFF	810	1909.8	25.96	26.50	1.132	-0.16	0.130	0.147	0.079	0.089
	GSM1900	GMSK	GPRS (3 Tx slots)	Bottom Side	10mm	OFF	810	1909.8	25.96	26.50	1.132	0.02	0.765	0.866	0.420	0.476
13	GSM1900	GMSK	GPRS (3 Tx slots)	Bottom Side	10mm	OFF	512	1850.2	25.26	26.50	1.330	-0.06	0.803	1.068	0.438	0.583
	GSM1900	GMSK	GPRS (3 Tx slots)	Bottom Side	10mm	OFF	661	1880	25.69	26.50	1.205	0.03	0.831	1.001	0.454	0.547

<WCDMA SAR>

Plot No.	Band	Modulation	Mode	Test Position	Gap (mm)	Power Reduction	Ch.	Freq. (MHz)	Average Power (dBm)	Tune-Up Limit (dBm)	Tune-up Scaling Factor	Power Drift (dB)	Measured 1g SAR (W/kg)	Reported 1g SAR (W/kg)	Measured 10g SAR (W/kg)	Reported 10g SAR (W/kg)
	WCDMA II	QPSK	RMC 12.2Kbps	Front	10mm	ON	9538	1907.6	21.86	22.00	1.033	0.04	0.617	0.637	0.354	0.366
	WCDMA II	QPSK	RMC 12.2Kbps	Back	10mm	ON	9538	1907.6	21.86	22.00	1.033	-0.03	0.918	0.948	0.500	0.516
	WCDMA II	QPSK	RMC 12.2Kbps	Back	10mm	ON	9262	1852.4	21.76	22.00	1.057	0.01	0.991	1.047	0.554	0.585
	WCDMA II	QPSK	RMC 12.2Kbps	Back	10mm	ON	9400	1880	21.70	22.00	1.072	-0.02	0.934	1.001	0.517	0.554
	WCDMA II	QPSK	RMC 12.2Kbps	Left Side	10mm	ON	9538	1907.6	21.86	22.00	1.033	-0.16	0.446	0.461	0.254	0.262
	WCDMA II	QPSK	RMC 12.2Kbps	Right Side	10mm	ON	9538	1907.6	21.86	22.00	1.033	0.12	0.236	0.244	0.142	0.147
	WCDMA II	QPSK	RMC 12.2Kbps	Bottom Side	10mm	ON	9538	1907.6	21.86	22.00	1.033	0.03	0.884	0.913	0.485	0.501
14	WCDMA II	QPSK	RMC 12.2Kbps	Bottom Side	10mm	ON	9262	1852.4	21.76	22.00	1.057	-0.18	1.080	1.141	0.587	0.620
	WCDMA II	QPSK	RMC 12.2Kbps	Bottom Side	10mm	ON	9400	1880	21.70	22.00	1.072	-0.08	0.969	1.038	0.530	0.568
	WCDMA V	QPSK	RMC 12.2Kbps	Front	10mm	OFF	4132	826.4	24.40	24.50	1.023	-0.17	0.333	0.341	0.266	0.272
	WCDMA V	QPSK	RMC 12.2Kbps	Back	10mm	OFF	4132	826.4	24.40	24.50	1.023	-0.09	0.406	0.415	0.294	0.301
15	WCDMA V	QPSK	RMC 12.2Kbps	Left Side	10mm	OFF	4132	826.4	24.40	24.50	1.023	-0.14	0.414	0.424	0.296	0.303
	WCDMA V	QPSK	RMC 12.2Kbps	Right Side	10mm	OFF	4132	826.4	24.40	24.50	1.023	-0.14	0.285	0.292	0.199	0.204
	WCDMA V	QPSK	RMC 12.2Kbps	Bottom Side	10mm	OFF	4132	826.4	24.40	24.50	1.023	-0.06	0.228	0.233	0.134	0.137

<LTE SAR>

Plot No.	Band	BW (MHz)	Modulation	RB Size	RB offset	Test Position	Gap (mm)	Power Reduction	Ch.	Freq. (MHz)	Average Power (dBm)	Tune-Up Limit (dBm)	Tune-up Scaling Factor	Power Drift (dB)	Measured 1g SAR (W/kg)	Reported 1g SAR (W/kg)	Measured 10g SAR (W/kg)	Reported 10g SAR (W/kg)
	LTE Band 2	20M	QPSK	1	0	Front	10mm	ON	18700	1860	21.88	22.00	1.028	-0.16	0.816	0.839	0.472	0.485
	LTE Band 2	20M	QPSK	1	0	Front	10mm	ON	18900	1880	21.69	22.00	1.074	-0.14	0.812	0.872	0.476	0.511
	LTE Band 2	20M	QPSK	1	0	Front	10mm	ON	19100	1900	21.64	22.00	1.086	-0.09	0.750	0.815	0.445	0.483
	LTE Band 2	20M	QPSK	50	0	Front	10mm	ON	18700	1860	21.51	22.00	1.119	-0.18	0.770	0.862	0.446	0.499
	LTE Band 2	20M	QPSK	50	0	Front	10mm	ON	18900	1880	21.49	22.00	1.125	-0.19	0.699	0.786	0.409	0.460
	LTE Band 2	20M	QPSK	50	0	Front	10mm	ON	19100	1900	21.46	22.00	1.132	0.04	0.717	0.812	0.421	0.477
	LTE Band 2	20M	QPSK	100	0	Front	10mm	ON	18700	1860	21.52	22.00	1.117	-0.06	0.845	0.944	0.487	0.544
	LTE Band 2	20M	QPSK	1	0	Back	10mm	ON	18700	1860	21.88	22.00	1.028	-0.02	1.060	1.090	0.595	0.612
	LTE Band 2	20M	QPSK	1	0	Back	10mm	ON	18900	1880	21.69	22.00	1.074	0.02	1.070	1.149	0.592	0.636
	LTE Band 2	20M	QPSK	1	0	Back	10mm	ON	19100	1900	21.64	22.00	1.086	-0.04	1.060	1.152	0.580	0.630
	LTE Band 2	20M	QPSK	50	0	Back	10mm	ON	18700	1860	21.51	22.00	1.119	-0.02	1.020	1.142	0.575	0.644
	LTE Band 2	20M	QPSK	50	0	Back	10mm	ON	18900	1880	21.49	22.00	1.125	0.04	0.850	0.956	0.469	0.527
	LTE Band 2	20M	QPSK	50	0	Back	10mm	ON	19100	1900	21.46	22.00	1.132	0.19	0.863	0.977	0.477	0.540
	LTE Band 2	20M	QPSK	100	0	Back	10mm	ON	18700	1860	21.52	22.00	1.117	-0.13	0.930	1.039	0.516	0.576
	LTE Band 2	20M	QPSK	1	0	Left Side	10mm	ON	18700	1860	21.88	22.00	1.028	-0.04	0.331	0.340	0.189	0.194
	LTE Band 2	20M	QPSK	50	0	Left Side	10mm	ON	18700	1860	21.51	22.00	1.119	-0.13	0.304	0.340	0.174	0.195
	LTE Band 2	20M	QPSK	1	0	Right Side	10mm	ON	18700	1860	21.88	22.00	1.028	0.14	0.168	0.173	0.103	0.106
	LTE Band 2	20M	QPSK	50	0	Right Side	10mm	ON	18700	1860	21.51	22.00	1.119	-0.12	0.158	0.177	0.095	0.106
16	LTE Band 2	20M	QPSK	1	0	Bottom Side	10mm	ON	18700	1860	21.88	22.00	1.028	-0.1	1.270	1.306	0.691	0.710
	LTE Band 2	20M	QPSK	1	0	Bottom Side	10mm	ON	18900	1880	21.69	22.00	1.074	-0.03	0.960	1.031	0.528	0.567
	LTE Band 2	20M	QPSK	1	0	Bottom Side	10mm	ON	19100	1900	21.64	22.00	1.086	0.12	0.989	1.074	0.542	0.589
	LTE Band 2	20M	QPSK	50	0	Bottom Side	10mm	ON	18700	1860	21.51	22.00	1.119	-0.15	1.140	1.276	0.624	0.699
	LTE Band 2	20M	QPSK	50	0	Bottom Side	10mm	ON	18900	1880	21.49	22.00	1.125	-0.15	1.000	1.125	0.548	0.616
	LTE Band 2	20M	QPSK	50	0	Bottom Side	10mm	ON	19100	1900	21.46	22.00	1.132	0.02	0.892	1.010	0.491	0.556
	LTE Band 2	20M	QPSK	100	0	Bottom Side	10mm	ON	18700	1860	21.52	22.00	1.117	-0.1	1.030	1.150	0.564	0.630
	LTE Band 5	10M	QPSK	1	0	Front	10mm	OFF	20525	836.5	23.98	24.00	1.005	-0.18	0.252	0.253	0.203	0.204
	LTE Band 5	10M	QPSK	25	0	Front	10mm	OFF	20525	836.5	22.95	23.00	1.012	-0.14	0.211	0.213	0.168	0.170
	LTE Band 5	10M	QPSK	1	0	Back	10mm	OFF	20525	836.5	23.98	24.00	1.005	-0.18	0.301	0.302	0.220	0.221
	LTE Band 5	10M	QPSK	25	0	Back	10mm	OFF	20525	836.5	22.95	23.00	1.012	-0.18	0.249	0.252	0.182	0.184
17	LTE Band 5	10M	QPSK	1	0	Left Side	10mm	OFF	20525	836.5	23.98	24.00	1.005	-0.05	0.446	0.448	0.317	0.318
	LTE Band 5	10M	QPSK	25	0	Left Side	10mm	OFF	20525	836.5	22.95	23.00	1.012	-0.1	0.379	0.383	0.270	0.273
	LTE Band 5	10M	QPSK	1	0	Right Side	10mm	OFF	20525	836.5	23.98	24.00	1.005	-0.04	0.298	0.299	0.208	0.209
	LTE Band 5	10M	QPSK	25	0	Right Side	10mm	OFF	20525	836.5	22.95	23.00	1.012	-0.17	0.256	0.259	0.179	0.181
	LTE Band 5	10M	QPSK	1	0	Bottom Side	10mm	OFF	20525	836.5	23.98	24.00	1.005	-0.14	0.224	0.225	0.130	0.131
	LTE Band 5	10M	QPSK	25	0	Bottom Side	10mm	OFF	20525	836.5	22.95	23.00	1.012	-0.12	0.189	0.191	0.110	0.111

Plot No.	Band	BW (MHz)	Modulation	RB Size	RB offset	Test Position	Gap (mm)	Power Reduction	Ch.	Freq. (MHz)	Average Power (dBm)	Tune-Up Limit (dBm)	Tune-up Scaling Factor	Power Drift (dB)	Measured 1g SAR (W/kg)	Reported 1g SAR (W/kg)	Measured 10g SAR (W/kg)	Reported 10g SAR (W/kg)
	LTE Band 7	20M	QPSK	1	0	Front	10mm	ON	21100	2535	21.37	21.50	1.030	0.11	0.427	0.440	0.227	0.234
	LTE Band 7	20M	QPSK	50	0	Front	10mm	ON	21100	2535	21.15	21.50	1.084	-0.12	0.449	0.487	0.237	0.257
	LTE Band 7	20M	QPSK	1	0	Back	10mm	ON	21100	2535	21.37	21.50	1.030	-0.18	0.859	0.885	0.443	0.456
	LTE Band 7	20M	QPSK	1	0	Back	10mm	ON	20850	2510	21.18	21.50	1.076	-0.11	0.665	0.716	0.355	0.382
	LTE Band 7	20M	QPSK	1	0	Back	10mm	ON	21350	2560	21.15	21.50	1.084	0.02	1.140	1.236	0.583	0.632
	LTE Band 7	20M	QPSK	50	0	Back	10mm	ON	21100	2535	21.15	21.50	1.084	-0.16	0.856	0.928	0.443	0.480
	LTE Band 7	20M	QPSK	50	0	Back	10mm	ON	20850	2510	20.96	21.50	1.132	-0.09	0.683	0.773	0.363	0.411
	LTE Band 7	20M	QPSK	50	0	Back	10mm	ON	21350	2560	20.79	21.50	1.178	-0.18	1.040	1.225	0.533	0.628
	LTE Band 7	20M	QPSK	100	0	Back	10mm	ON	21100	2535	21.06	21.50	1.107	0.11	0.812	0.899	0.418	0.463
	LTE Band 7	20M	QPSK	1	0	Left Side	10mm	ON	21100	2535	21.37	21.50	1.030	-0.13	0.080	0.082	0.049	0.050
	LTE Band 7	20M	QPSK	50	0	Left Side	10mm	ON	21100	2535	21.15	21.50	1.084	-0.11	0.068	0.074	0.042	0.046
	LTE Band 7	20M	QPSK	1	0	Right Side	10mm	ON	21100	2535	21.37	21.50	1.030	0.12	0.157	0.162	0.089	0.092
	LTE Band 7	20M	QPSK	50	0	Right Side	10mm	ON	21100	2535	21.15	21.50	1.084	-0.15	0.146	0.158	0.084	0.091
	LTE Band 7	20M	QPSK	1	0	Bottom Side	10mm	ON	21100	2535	21.37	21.50	1.030	-0.1	0.853	0.879	0.430	0.443
	LTE Band 7	20M	QPSK	1	0	Bottom Side	10mm	ON	20850	2510	21.18	21.50	1.076	-0.11	0.559	0.602	0.283	0.305
	LTE Band 7	20M	QPSK	1	0	Bottom Side	10mm	ON	21350	2560	21.15	21.50	1.084	-0.03	1.200	1.301	0.612	0.663
	LTE Band 7	20M	QPSK	50	0	Bottom Side	10mm	ON	21100	2535	21.15	21.50	1.084	-0.14	0.851	0.922	0.425	0.461
	LTE Band 7	20M	QPSK	50	0	Bottom Side	10mm	ON	20850	2510	20.96	21.50	1.132	-0.12	0.613	0.694	0.305	0.345
18	LTE Band 7	20M	QPSK	50	0	Bottom Side	10mm	ON	21350	2560	20.79	21.50	1.178	-0.16	1.140	1.342	0.572	0.674
	LTE Band 7	20M	QPSK	100	0	Bottom Side	10mm	ON	21100	2535	21.06	21.50	1.107	-0.14	0.858	0.949	0.429	0.475

<WLAN SAR>

Plot No.	Band	Modulation	Mode	Test Position	Gap (mm)	Ch.	Freq. (MHz)	Average Power (dBm)	Tune-Up Limit (dBm)	Tune-up Scaling Factor	Duty Cycle %	Duty Cycle Scaling Factor	Power Drift (dB)	Measured 1g SAR (W/kg)	Reported 1g SAR (W/kg)	Measured 10g SAR (W/kg)	Reported 10g SAR (W/kg)
	WLAN2.4GHz	DSSS	802.11b 1Mbps	Front	10mm	6	2437	16.41	16.50	1.021	100	1.000	-0.1	0.268	0.274	0.144	0.147
	WLAN2.4GHz	DSSS	802.11b 1Mbps	Back	10mm	6	2437	16.41	16.50	1.021	100	1.000	-0.04	0.296	0.302	0.143	0.146
	WLAN2.4GHz	DSSS	802.11b 1Mbps	Right Side	10mm	6	2437	16.41	16.50	1.021	100	1.000	0.12	0.022	0.022	0.011	0.011
	WLAN2.4GHz	DSSS	802.11b 1Mbps	Top Side	10mm	6	2437	16.41	16.50	1.021	100	1.000	0.07	0.381	0.389	0.193	0.197
19	WLAN2.4GHz	DSSS	802.11b 1Mbps	Top Side	10mm	1	2412	16.36	16.50	1.033	100	1.000	-0.09	0.394	0.407	0.199	0.206
	WLAN2.4GHz	DSSS	802.11b 1Mbps	Top Side	10mm	11	2462	16.27	16.50	1.054	100	1.000	-0.06	0.364	0.384	0.184	0.194

15.3 Body Worn Accessory SAR

<GSM SAR>

Plot No.	Band	Modulation	Mode	Test Position	Gap (mm)	Ch.	Freq. (MHz)	Average Power (dBm)	Tune-Up Limit (dBm)	Tune-up Scaling Factor	Power Drift (dB)	Measured 1g SAR (W/kg)	Reported 1g SAR (W/kg)	Measured 10g SAR (W/kg)	Reported 10g SAR (W/kg)
	GSM850	GMSK	GPRS (4 Tx slots)	Front	15mm	251	848.8	27.96	28.00	1.009	-0.02	0.338	0.341	0.269	0.271
20	GSM850	GMSK	GPRS (4 Tx slots)	Back	15mm	251	848.8	27.96	28.00	1.009	-0.08	0.361	0.364	0.285	0.288
	GSM1900	GMSK	GPRS (3 Tx slots)	Front	15mm	810	1909.8	25.96	26.50	1.132	0.15	0.236	0.267	0.145	0.164
21	GSM1900	GMSK	GPRS (3 Tx slots)	Back	15mm	810	1909.8	25.96	26.50	1.132	-0.06	0.335	0.379	0.198	0.224

<WCDMA SAR>

Plot No.	Band	Modulation	Mode	Test Position	Gap (mm)	Ch.	Freq. (MHz)	Average Power (dBm)	Tune-Up Limit (dBm)	Tune-up Scaling Factor	Power Drift (dB)	Measured 1g SAR (W/kg)	Reported 1g SAR (W/kg)	Measured 10g SAR (W/kg)	Reported 10g SAR (W/kg)
	WCDMA II	QPSK	RMC 12.2Kbps	Front	15mm	9538	1907.6	23.85	24.00	1.035	0.02	0.446	0.462	0.275	0.285
22	WCDMA II	QPSK	RMC 12.2Kbps	Back	15mm	9538	1907.6	23.85	24.00	1.035	-0.03	0.646	0.669	0.381	0.394
	WCDMA V	QPSK	RMC 12.2Kbps	Front	15mm	4132	826.4	24.40	24.50	1.023	-0.08	0.306	0.313	0.244	0.250
23	WCDMA V	QPSK	RMC 12.2Kbps	Back	15mm	4132	826.4	24.40	24.50	1.023	-0.08	0.314	0.321	0.250	0.256

<LTE SAR>

Plot No.	Band	BW (MHz)	Modulation	RB Size	RB offset	Test Position	Gap (mm)	Ch.	Freq. (MHz)	Average Power (dBm)	Tune-Up Limit (dBm)	Tune-up Scaling Factor	Power Drift (dB)	Measured 1g SAR (W/kg)	Reported 1g SAR (W/kg)	Measured 10g SAR (W/kg)	Reported 10g SAR (W/kg)
	LTE Band 2	20M	QPSK	1	0	Front	15mm	18700	1860	24.00	24.00	1.000	-0.19	0.622	0.622	0.379	0.379
	LTE Band 2	20M	QPSK	50	0	Front	15mm	18700	1860	23.00	23.00	1.000	0.01	0.475	0.475	0.293	0.293
24	LTE Band 2	20M	QPSK	1	0	Back	15mm	18700	1860	24.00	24.00	1.000	-0.02	0.816	0.816	0.490	0.490
	LTE Band 2	20M	QPSK	1	0	Back	15mm	18900	1880	23.95	24.00	1.012	-0.17	0.738	0.747	0.439	0.444
	LTE Band 2	20M	QPSK	1	0	Back	15mm	19100	1900	23.57	24.00	1.104	-0.06	0.664	0.733	0.393	0.434
	LTE Band 2	20M	QPSK	50	0	Back	15mm	18700	1860	23.00	23.00	1.000	-0.08	0.611	0.611	0.366	0.366
	LTE Band 2	20M	QPSK	100	0	Back	15mm	18700	1860	23.00	23.00	1.000	-0.07	0.603	0.603	0.360	0.360
	LTE Band 5	10M	QPSK	1	0	Front	15mm	20525	836.5	23.98	24.00	1.005	0.11	0.263	0.264	0.207	0.208
	LTE Band 5	10M	QPSK	25	0	Front	15mm	20525	836.5	22.95	23.00	1.012	0.02	0.215	0.217	0.170	0.172
25	LTE Band 5	10M	QPSK	1	0	Back	15mm	20525	836.5	23.98	24.00	1.005	-0.07	0.266	0.267	0.211	0.212
	LTE Band 5	10M	QPSK	25	0	Back	15mm	20525	836.5	22.95	23.00	1.012	-0.04	0.222	0.225	0.175	0.177
	LTE Band 7	20M	QPSK	1	0	Front	15mm	20850	2510	24.00	24.00	1.000	0.17	0.319	0.319	0.179	0.179
	LTE Band 7	20M	QPSK	50	0	Front	15mm	20850	2510	22.80	23.00	1.047	0.05	0.296	0.310	0.168	0.176
26	LTE Band 7	20M	QPSK	1	0	Back	15mm	20850	2510	24.00	24.00	1.000	-0.13	0.619	0.619	0.346	0.346
	LTE Band 7	20M	QPSK	50	0	Back	15mm	20850	2510	22.80	23.00	1.047	-0.18	0.502	0.526	0.280	0.293

<WLAN SAR>

Plot No.	Band	Modulation	Mode	Test Position	Gap (mm)	Ch.	Freq. (MHz)	Average Power (dBm)	Tune-Up Limit (dBm)	Tune-up Scaling Factor	Duty Cycle %	Duty Cycle Scaling Factor	Power Drift (dB)	Measured 1g SAR (W/kg)	Reported 1g SAR (W/kg)	Measured 10g SAR (W/kg)	Reported 10g SAR (W/kg)
	WLAN2.4GHz	DSSS	802.11b 1Mbps	Front	15mm	6	2437	16.41	16.50	1.021	100	1.000	-0.18	0.168	0.172	0.096	0.098
27	WLAN2.4GHz	DSSS	802.11b 1Mbps	Front	15mm	1	2412	16.36	16.50	1.033	100	1.000	-0.05	0.178	0.184	0.102	0.105
	WLAN2.4GHz	DSSS	802.11b 1Mbps	Front	15mm	11	2462	16.27	16.50	1.054	100	1.000	-0.13	0.155	0.163	0.087	0.092
	WLAN2.4GHz	DSSS	802.11b 1Mbps	Back	15mm	6	2437	16.41	16.50	1.021	100	1.000	-0.14	0.167	0.170	0.097	0.099
28	WLAN5GHz	OFDM	802.11a 6Mbps	Front	15mm	52	5260	14.90	15.00	1.022	96.53	1.036	-0.16	0.118	0.125	0.042	0.044
	WLAN5GHz	OFDM	802.11a 6Mbps	Front	15mm	60	5300	14.80	15.00	1.046	96.53	1.036	-0.15	0.109	0.118	0.034	0.037
	WLAN5GHz	OFDM	802.11a 6Mbps	Back	15mm	52	5260	14.90	15.00	1.022	96.53	1.036	-0.19	0.107	0.113	0.041	0.043
	WLAN5GHz	OFDM	802.11a 6Mbps	Front	15mm	116	5580	14.96	15.00	1.009	96.53	1.036	-0.09	0.087	0.091	0.035	0.037
	WLAN5GHz	OFDM	802.11a 6Mbps	Back	15mm	116	5580	14.96	15.00	1.009	96.53	1.036	-0.07	0.238	0.249	0.089	0.093
29	WLAN5GHz	OFDM	802.11a 6Mbps	Back	15mm	100	5500	14.95	15.00	1.011	96.53	1.036	-0.13	0.269	0.282	0.095	0.099
	WLAN5GHz	OFDM	802.11a 6Mbps	Back	15mm	132	5660	14.85	15.00	1.035	96.53	1.036	0.09	0.219	0.235	0.089	0.095
	WLAN5GHz	OFDM	802.11a 6Mbps	Back	15mm	144	5720	14.93	15.00	1.016	96.53	1.036	-0.12	0.142	0.149	0.060	0.063
	WLAN5GHz	OFDM	802.11a 6Mbps	Front	15mm	149	5745	14.96	15.00	1.009	96.53	1.036	-0.04	0.101	0.106	0.039	0.041
30	WLAN5GHz	OFDM	802.11a 6Mbps	Back	15mm	149	5745	14.96	15.00	1.009	96.53	1.036	0.17	0.138	0.144	0.055	0.058
	WLAN5GHz	OFDM	802.11a 6Mbps	Back	15mm	157	5785	14.91	15.00	1.021	96.53	1.036	-0.1	0.120	0.127	0.048	0.051
	WLAN5GHz	OFDM	802.11a 6Mbps	Back	15mm	165	5825	14.90	15.00	1.023	96.53	1.036	0.01	0.108	0.114	0.043	0.046

15.4 Repeated SAR Measurement

No.	Band	BW (MHz)	Modulation	RB Size	RB offset	Test Position	Gap (mm)	Power Reduction	Ch.	Freq. (MHz)	Average Power (dBm)	Tune-Up Limit (dBm)	Tune-up Scaling Factor	Power Drift (dB)	Measured 1g SAR (W/kg)	Ratio	Reported 1g SAR (W/kg)
1st	LTE Band 2	20M	QPSK	1	0	Bottom Side	10mm	ON	18700	1860	21.88	22.00	1.028	-0.1	1.270		1.306
2nd	LTE Band 2	20M	QPSK	1	0	Bottom Side	10mm	ON	18700	1860	21.88	22.00	1.028	-0.14	1.210	1.05	1.244
1st	LTE Band 7	20M	QPSK	50	0	Bottom Side	10mm	ON	21350	2560	20.79	21.50	1.178	-0.16	1.140		1.342
2nd	LTE Band 7	20M	QPSK	50	0	Bottom Side	10mm	ON	21350	2560	20.79	21.50	1.178	-0.13	1.140	1.00	1.342

No.	Band	Mode	Test Position	Gap (mm)	Ch.	Freq. (MHz)	Average Power (dBm)	Tune-Up Limit (dBm)	Tune-up Scaling Factor	Duty Cycle %	Duty Cycle Scaling Factor	Power Drift (dB)	Measured 1g SAR (W/kg)	Ratio	Reported 1g SAR (W/kg)
1st	WLAN2.4GHz	802.11b 1Mbps	Left Cheek	0mm	1	2412	16.36	16.50	1.033	100	1.000	0	1.240		1.281
2nd	WLAN2.4GHz	802.11b 1Mbps	Left Cheek	0mm	1	2412	16.36	16.50	1.033	100	1.000	0.15	1.200	1.03	1.239
1st	WLAN5GHz	802.11a 6Mbps	Left Cheek	0mm	52	5260	14.90	15.00	1.022	96.53	1.036	-0.15	1.120		1.186
2nd	WLAN5GHz	802.11a 6Mbps	Left Cheek	0mm	52	5260	14.90	15.00	1.022	96.53	1.036	-0.1	1.040	1.08	1.102

General Note:

1. Per KDB 865664 D01v01r04, for each frequency band, repeated SAR measurement is required only when the measured SAR is ≥0.8W/kg.
2. Per KDB 865664 D01v01r04, if the ratio among the repeated measurement is ≤ 1.2 and the measured SAR <1.45W/kg, only one repeated measurement is required.
3. The ratio is the difference in percentage between original and repeated *measured SAR*.
4. All measurement SAR result is scaled-up to account for tune-up tolerance and is compliant.

15.5 Holder perturbation verification

Antenna	Mode	Test Position	Gap (mm)	Ch.	Freq. (MHz)	With device holder	Without device holder	Deviation	Ratio
						Measured 1g SAR (W/kg)	Measured 1g SAR (W/kg)		
WLAN	802.11b 1Mbps	Front	0mm	1	2412	2.72	2.69	-1.1%	0.989

General Note:

1. According to device Holder of uncertainty budget (device Holder Standard Uncertainty = 3.6), when k =2 (Coverage Factor for 95 %), the Expanded STD Uncertainty for this device is within +/-7.2% is compliant with uncertainty budget.
2. The setup photo can refer to Appendix D.

Antenna	Mode	Test Position	Gap (mm)	Ch.	Freq. (MHz)	Highest reported SAR 1g SAR (W/kg)	Ratio	Highest adjusted SAR 1g SAR (W/kg)
WLAN	802.11b 1Mbps	Front	0mm	1	2412	1.281	0.989	1.266

General Note:

1. The highest reported SAR for each antenna is adjusted by the ratio of with and w/o holder, it is compliance with RF exposure limit (1.6 W/kg), therefore holder verification would not impact SAR test results.

16. Simultaneous Transmission Analysis

NO.	Simultaneous Transmission Configurations	Portable Handset		
		Head	Body-worn	Hotspot
1.	GSM Voice + WLAN2.4GHz	Yes	Yes	
2.	GPRS/EDGE + WLAN2.4GHz	Yes	Yes	Yes
3.	WCDMA + WLAN2.4GHz	Yes	Yes	Yes
4.	LTE + WLAN2.4GHz	Yes	Yes	Yes
5.	GSM Voice + Bluetooth		Yes	
6.	GPRS/EDGE + Bluetooth		Yes	
7.	WCDMA+ Bluetooth		Yes	
8.	LTE + Bluetooth		Yes	
9.	GSM Voice + WLAN5GHz	Yes	Yes	
10.	GPRS/EDGE + WLAN5GHz	Yes	Yes	
11.	WCDMA + WLAN5GHz	Yes	Yes	
12.	LTE + WLAN5GHz	Yes	Yes	

General Note:

1. In this report, the 10g SAR transmission simultaneous analysis results which is submitted voluntarily.
2. This device 2.4GHz WLAN supports Hotspot operation.
3. The worst case WLAN reported SAR for each configuration was used for SAR summation. Therefore, the following summations represent the absolute worst cases for simultaneous transmission with WLAN.
4. WLAN and Bluetooth share the same antenna, and cannot transmit simultaneously.
5. EUT will choose either WLAN 2.4GHz or WLAN 5GHz according to the network signal condition; therefore, 2.4GHz WLAN and 5GHz WLAN will not operate simultaneously at any moment.
6. The Scaled SAR summation is calculated based on the same configuration and test position.
7. Per KDB 447498 D01v06, simultaneous transmission SAR is compliant if,
   i) Scalar SAR summation < 1.6W/kg.
   ii) SPLSR = (SAR1 + SAR2)^1.5 / (min. separation distance, mm), and the peak separation distance is determined from the square root of [(x1-x2)2 + (y1-y2)2 + (z1-z2)2], where (x1, y1, z1) and (x2, y2, z2) are the coordinates of the extrapolated peak SAR locations in the zoom scan.
   iii) If SPLSR ≤ 0.04, simultaneously transmission SAR measurement is not necessary.
   iv) Simultaneously transmission SAR measurement, and the reported multi-band SAR < 1.6W/kg.
8. For simultaneous transmission analysis, Bluetooth SAR is estimated per KDB 447498 D01v06 based on the formula below.
   i) (*max. power of channel, including tune-up tolerance, mW*)/(*min. test separation distance, mm*)]·[√f(GHz)/*x*] W/kg for *test separation distances* ≤ 50 mm; where *x* = 7.5 for 1-g SAR, and *x* = 18.75 for 10-g SAR.
   ii) When the minimum separation distance is < 5mm, the distance is used 5mm to determine SAR test exclusion.
   iii) 0.4 W/kg for 1-g SAR and 1.0 W/kg for 10-g SAR, when the *test separation distances* is > 50 mm.

Bluetooth Max Power	Exposure Position	Body worn
	Test separation	15 mm
6.75dBm	Estimated SAR (W/kg)	0.07 W/kg

16.1 Head Exposure Conditions

WWAN Band		Exposure Position	1 WWAN 1g SAR (W/kg)	2 2.4GHz WLAN 1g SAR (W/kg)	3 5GHz WLAN 1g SAR (W/kg)	1+2 Summed 1g SAR (W/kg)	1+3 Summed 1g SAR (W/kg)
GSM	GSM850	Right Cheek	0.244	1.053	1.070	**1.30**	**1.31**
		Right Tilted	0.116	0.994	0.907	**1.11**	**1.02**
		Left Cheek	0.283	1.281	1.186	**1.56**	**1.47**
		Left Tilted	0.138	1.095	0.937	**1.23**	**1.08**
	GSM1900	Right Cheek	0.123	1.053	1.070	**1.18**	**1.19**
		Right Tilted	0.069	0.994	0.907	**1.06**	**0.98**
		Left Cheek	0.138	1.281	1.186	**1.42**	**1.32**
		Left Tilted	0.044	1.095	0.937	**1.14**	**0.98**
WCDMA	WCDMA II	Right Cheek	0.193	1.053	1.070	**1.25**	**1.26**
		Right Tilted	0.122	0.994	0.907	**1.12**	**1.03**
		Left Cheek	0.236	1.281	1.186	**1.52**	**1.42**
		Left Tilted	0.082	1.095	0.937	**1.18**	**1.02**
	WCDMA V	Right Cheek	0.194	1.053	1.070	**1.25**	**1.26**
		Right Tilted	0.094	0.994	0.907	**1.09**	**1.00**
		Left Cheek	0.219	1.281	1.186	**1.50**	**1.41**
		Left Tilted	0.120	1.095	0.937	**1.22**	**1.06**
LTE	LTE Band 2	Right Cheek	0.276	1.053	1.070	**1.33**	**1.35**
		Right Tilted	0.133	0.994	0.907	**1.13**	**1.04**
		Left Cheek	0.238	1.281	1.186	**1.52**	**1.42**
		Left Tilted	0.131	1.095	0.937	**1.23**	**1.07**
	LTE Band 5	Right Cheek	0.186	1.053	1.070	**1.24**	**1.26**
		Right Tilted	0.093	0.994	0.907	**1.09**	**1.00**
		Left Cheek	0.200	1.281	1.186	**1.48**	**1.39**
		Left Tilted	0.100	1.095	0.937	**1.20**	**1.04**
	LTE Band 7	Right Cheek	0.251	1.053	1.070	**1.30**	**1.32**
		Right Tilted	0.040	0.994	0.907	**1.03**	**0.95**
		Left Cheek	0.128	1.281	1.186	**1.41**	**1.31**
		Left Tilted	0.087	1.095	0.937	**1.18**	**1.02**

WWAN Band		Exposure Position	1 WWAN 10g SAR (W/kg)	2 2.4GHz WLAN 10g SAR (W/kg)	3 5GHz WLAN 10g SAR (W/kg)	1+2 Summed 10g SAR (W/kg)	1+3 Summed 10g SAR (W/kg)
GSM	GSM850	Right Cheek	0.198	0.499	0.330	**0.70**	**0.53**
		Right Tilted	0.096	0.481	0.292	**0.58**	**0.39**
		Left Cheek	0.221	0.543	0.353	**0.76**	**0.57**
		Left Tilted	0.111	0.493	0.284	**0.60**	**0.40**
	GSM1900	Right Cheek	0.079	0.499	0.330	**0.58**	**0.41**
		Right Tilted	0.043	0.481	0.292	**0.52**	**0.34**
		Left Cheek	0.093	0.543	0.353	**0.64**	**0.45**
		Left Tilted	0.028	0.493	0.284	**0.52**	**0.31**
WCDMA	WCDMA II	Right Cheek	0.124	0.499	0.330	**0.62**	**0.45**
		Right Tilted	0.076	0.481	0.292	**0.56**	**0.37**
		Left Cheek	0.156	0.543	0.353	**0.70**	**0.51**
		Left Tilted	0.049	0.493	0.284	**0.54**	**0.33**
	WCDMA V	Right Cheek	0.155	0.499	0.330	**0.65**	**0.49**
		Right Tilted	0.077	0.481	0.292	**0.56**	**0.37**
		Left Cheek	0.174	0.543	0.353	**0.72**	**0.53**
		Left Tilted	0.096	0.493	0.284	**0.59**	**0.38**
LTE	LTE Band 2	Right Cheek	0.181	0.499	0.330	**0.68**	**0.51**
		Right Tilted	0.083	0.481	0.292	**0.56**	**0.38**
		Left Cheek	0.159	0.543	0.353	**0.70**	**0.51**
		Left Tilted	0.079	0.493	0.284	**0.57**	**0.36**
	LTE Band 5	Right Cheek	0.149	0.499	0.330	**0.65**	**0.48**
		Right Tilted	0.076	0.481	0.292	**0.56**	**0.37**
		Left Cheek	0.160	0.543	0.353	**0.70**	**0.51**
		Left Tilted	0.080	0.493	0.284	**0.57**	**0.36**
	LTE Band 7	Right Cheek	0.135	0.499	0.330	**0.63**	**0.47**
		Right Tilted	0.012	0.481	0.292	**0.49**	**0.30**
		Left Cheek	0.058	0.543	0.353	**0.60**	**0.41**
		Left Tilted	0.046	0.493	0.284	**0.54**	**0.33**

16.2 Hotspot Exposure Conditions

WWAN Band		Exposure Position	1 WWAN 1g SAR (W/kg)	2 2.4GHz WLAN 1g SAR (W/kg)	1+2 Summed 1g SAR (W/kg)
GSM	GSM850	Front	0.353	0.274	**0.63**
		Back	0.400	0.302	**0.70**
		Left side	0.509		**0.51**
		Right side	0.444	0.022	**0.47**
		Top side		0.407	**0.41**
		Bottom side	0.253		**0.25**
	GSM1900	Front	0.538	0.274	**0.81**
		Back	0.997	0.302	**1.30**
		Left side	0.275		**0.28**
		Right side	0.147	0.022	**0.17**
		Top side		0.407	**0.41**
		Bottom side	1.068		**1.07**
WCDMA	WCDMA II	Front	0.637	0.274	**0.91**
		Back	1.047	0.302	**1.35**
		Left side	0.461		**0.46**
		Right side	0.244	0.022	**0.27**
		Top side		0.407	**0.41**
		Bottom side	1.141		**1.14**
	WCDMA V	Front	0.341	0.274	**0.62**
		Back	0.415	0.302	**0.72**
		Left side	0.424		**0.42**
		Right side	0.292	0.022	**0.31**
		Top side		0.407	**0.41**
		Bottom side	0.233		**0.23**
LTE	LTE Band 2	Front	0.944	0.274	**1.22**
		Back	1.152	0.302	**1.45**
		Left side	0.340		**0.34**
		Right side	0.177	0.022	**0.20**
		Top side		0.407	**0.41**
		Bottom side	1.306		**1.31**
	LTE Band 5	Front	0.253	0.274	**0.53**
		Back	0.302	0.302	**0.60**
		Left side	0.448		**0.45**
		Right side	0.299	0.022	**0.32**
		Top side		0.407	**0.41**
		Bottom side	0.225		**0.23**
	LTE Band 7	Front	0.487	0.274	**0.76**
		Back	1.236	0.302	**1.54**
		Left side	0.082		**0.08**
		Right side	0.162	0.022	**0.18**
		Top side		0.407	**0.41**
		Bottom side	1.342		**1.34**

WWAN Band		Exposure Position	1 WWAN 10g SAR (W/kg)	2 2.4GHz WLAN 10g SAR (W/kg)	1+2 Summed 10g SAR (W/kg)
GSM	GSM850	Front	0.284	0.147	**0.43**
		Back	0.321	0.146	**0.47**
		Left side	0.360		**0.36**
		Right side	0.308	0.011	**0.32**
		Top side		0.206	**0.21**
		Bottom side	0.154		**0.15**
	GSM1900	Front	0.307	0.147	**0.45**
		Back	0.561	0.146	**0.71**
		Left side	0.159		**0.16**
		Right side	0.089	0.011	**0.10**
		Top side		0.206	**0.21**
		Bottom side	0.583		**0.58**
WCDMA	WCDMA II	Front	0.366	0.147	**0.51**
		Back	0.585	0.146	**0.73**
		Left side	0.262		**0.26**
		Right side	0.147	0.011	**0.16**
		Top side		0.206	**0.21**
		Bottom side	0.620		**0.62**
	WCDMA V	Front	0.272	0.147	**0.42**
		Back	0.301	0.146	**0.45**
		Left side	0.303		**0.30**
		Right side	0.204	0.011	**0.22**
		Top side		0.206	**0.21**
		Bottom side	0.137		**0.14**
LTE	LTE Band 2	Front	0.544	0.147	**0.69**
		Back	0.644	0.146	**0.79**
		Left side	0.195		**0.20**
		Right side	0.106	0.011	**0.12**
		Top side		0.206	**0.21**
		Bottom side	0.710		**0.71**
	LTE Band 5	Front	0.204	0.147	**0.35**
		Back	0.221	0.146	**0.37**
		Left side	0.318		**0.32**
		Right side	0.209	0.011	**0.22**
		Top side		0.206	**0.21**
		Bottom side	0.131		**0.13**
	LTE Band 7	Front	0.257	0.147	**0.40**
		Back	0.632	0.146	**0.78**
		Left side	0.050		**0.05**
		Right side	0.092	0.011	**0.10**
		Top side		0.206	**0.21**
		Bottom side	0.674		**0.67**

16.3 Body-Worn Accessory Exposure Conditions

WWAN Band		Exposure Position	1 WWAN 1g SAR (W/kg)	2 2.4GHz WLAN 1g SAR (W/kg)	3 5GHz WLAN 1g SAR (W/kg)	4 Bluetooth Estimated 1g SAR (W/kg)	1+2 Summed 1g SAR (W/kg)	1+3 Summed 1g SAR (W/kg)	1+4 Summed 1g SAR (W/kg)
GSM	GSM850	Front	0.341	0.184	0.125	0.070	**0.53**	**0.47**	**0.41**
		Back	0.364	0.170	0.282	0.070	**0.53**	**0.65**	**0.43**
	GSM1900	Front	0.267	0.184	0.125	0.070	**0.45**	**0.39**	**0.34**
		Back	0.379	0.170	0.282	0.070	**0.55**	**0.66**	**0.45**
WCDMA	WCDMA II	Front	0.462	0.184	0.125	0.070	**0.65**	**0.59**	**0.53**
		Back	0.669	0.170	0.282	0.070	**0.84**	**0.95**	**0.74**
	WCDMA V	Front	0.313	0.184	0.125	0.070	**0.50**	**0.44**	**0.38**
		Back	0.321	0.170	0.282	0.070	**0.49**	**0.60**	**0.39**
LTE	LTE Band 2	Front	0.622	0.184	0.125	0.070	**0.81**	**0.75**	**0.69**
		Back	0.816	0.170	0.282	0.070	**0.99**	**1.10**	**0.89**
	LTE Band 5	Front	0.264	0.184	0.125	0.070	**0.45**	**0.39**	**0.33**
		Back	0.267	0.170	0.282	0.070	**0.44**	**0.55**	**0.34**
	LTE Band 7	Front	0.319	0.184	0.125	0.070	**0.50**	**0.44**	**0.39**
		Back	0.619	0.170	0.282	0.070	**0.79**	**0.90**	**0.69**

WWAN Band		Exposure Position	1 WWAN 10g SAR (W/kg)	2 2.4GHz WLAN 10g SAR (W/kg)	3 5GHz WLAN 10g SAR (W/kg)	1+2 Summed 10g SAR (W/kg)	1+3 Summed 10g SAR (W/kg)
GSM	GSM850	Front	0.271	0.105	0.044	**0.38**	**0.32**
		Back	0.288	0.099	0.099	**0.39**	**0.39**
	GSM1900	Front	0.164	0.105	0.044	**0.27**	**0.21**
		Back	0.224	0.099	0.099	**0.32**	**0.32**
WCDMA	WCDMA II	Front	0.285	0.105	0.044	**0.39**	**0.33**
		Back	0.394	0.099	0.099	**0.49**	**0.49**
	WCDMA V	Front	0.250	0.105	0.044	**0.36**	**0.29**
		Back	0.256	0.099	0.099	**0.36**	**0.36**
LTE	LTE Band 2	Front	0.379	0.105	0.044	**0.48**	**0.42**
		Back	0.490	0.099	0.099	**0.59**	**0.59**
	LTE Band 5	Front	0.208	0.105	0.044	**0.31**	**0.25**
		Back	0.212	0.099	0.099	**0.31**	**0.31**
	LTE Band 7	Front	0.179	0.105	0.044	**0.28**	**0.22**
		Back	0.346	0.099	0.099	**0.45**	**0.45**

Test Engineer : Nick Yu San Lin Poa Pan Steven Chang and Ken Li

17. Uncertainty Assessment

Note:
1. The uncertainty assessment of below which is submitted voluntarily.

The component of uncertainly may generally be categorized according to the methods used to evaluate them. The evaluation of uncertainly by the statistical analysis of a series of observations is termed a Type An evaluation of uncertainty. The evaluation of uncertainty by means other than the statistical analysis of a series of observation is termed a Type B evaluation of uncertainty. Each component of uncertainty, however evaluated, is represented by an estimated standard deviation, termed standard uncertainty, which is determined by the positive square root of the estimated variance.

A Type A evaluation of standard uncertainty may be based on any valid statistical method for treating data. This includes calculating the standard deviation of the mean of a series of independent observations; using the method of least squares to fit a curve to the data in order to estimate the parameter of the curve and their standard deviations; or carrying out an analysis of variance in order to identify and quantify random effects in certain kinds of measurement.

A type B evaluation of standard uncertainty is typically based on scientific judgment using all of the relevant information available. These may include previous measurement data, experience, and knowledge of the behavior and properties of relevant materials and instruments, manufacture's specification, data provided in calibration reports and uncertainties assigned to reference data taken from handbooks. Broadly speaking, the uncertainty is either obtained from an outdoor source or obtained from an assumed distribution, such as the normal distribution, rectangular or triangular distributions indicated in table below.

Uncertainty Distributions	Normal	Rectangular	Triangular	U-Shape
Multi-plying Factor[(a)]	1/k[(b)]	$1/\sqrt{3}$	$1/\sqrt{6}$	$1/\sqrt{2}$

(a) standard uncertainty is determined as the product of the multiplying factor and the estimated range of variations in the measured quantity

(b) κ is the coverage factor

Table 17.1. Standard Uncertainty for Assumed Distribution

The combined standard uncertainty of the measurement result represents the estimated standard deviation of the result. It is obtained by combining the individual standard uncertainties of both Type A and Type B evaluation using the usual "root-sum-squares" (RSS) methods of combining standard deviations by taking the positive square root of the estimated variances.

Expanded uncertainty is a measure of uncertainty that defines an interval about the measurement result within which the measured value is confidently believed to lie. It is obtained by multiplying the combined standard uncertainty by a coverage factor. Typically, the coverage factor ranges from 2 to 3. Using a coverage factor allows the true value of a measured quantity to be specified with a defined probability within the specified uncertainty range. For purpose of this document, a coverage factor two is used, which corresponds to confidence interval of about 95 %. The DASY uncertainty Budget is shown in the following tables.

Error Description	Uncertainty Value (±%)	Probability	Divisor	(Ci) 1g	(Ci) 10g	Standard Uncertainty (1g) (±%)	Standard Uncertainty (10g) (±%)
Measurement System							
Probe Calibration	6.00	N	1	1	1	6.0	6.0
Axial Isotropy	4.70	R	1.732	0.7	0.7	1.9	1.9
Hemispherical Isotropy	9.60	R	1.732	0.7	0.7	3.9	3.9
Boundary Effects	1.00	R	1.732	1	1	0.6	0.6
Linearity	4.70	R	1.732	1	1	2.7	2.7
System Detection Limits	1.00	R	1.732	1	1	0.6	0.6
Modulation Response	4.68	R	1.732	1	1	2.7	2.7
Readout Electronics	0.30	N	1	1	1	0.3	0.3
Response Time	0.00	R	1.732	1	1	0.0	0.0
Integration Time	2.60	R	1.732	1	1	1.5	1.5
RF Ambient Noise	3.00	R	1.732	1	1	1.7	1.7
RF Ambient Reflections	3.00	R	1.732	1	1	1.7	1.7
Probe Positioner	0.40	R	1.732	1	1	0.2	0.2
Probe Positioning	2.90	R	1.732	1	1	1.7	1.7
Max. SAR Eval.	2.00	R	1.732	1	1	1.2	1.2
Test Sample Related							
Device Positioning	3.03	N	1	1	1	3.0	3.0
Device Holder	3.60	N	1	1	1	3.6	3.6
Power Drift	5.00	R	1.732	1	1	2.9	2.9
Power Scaling	0.00	R	1.732	1	1	0.0	0.0
Phantom and Setup							
Phantom Uncertainty	6.10	R	1.732	1	1	3.5	3.5
SAR correction	0.00	R	1.732	1	0.84	0.0	0.0
Liquid Conductivity Repeatability	0.03	N	1	0.78	0.71	0.0	0.0
Liquid Conductivity (target)	5.00	R	1.732	0.78	0.71	2.3	2.0
Liquid Conductivity (mea.)	2.50	R	1.732	0.78	0.71	1.1	1.0
Temp. unc. - Conductivity	3.68	R	1.732	0.78	0.71	1.7	1.5
Liquid Permittivity Repeatability	0.02	N	1	0.23	0.26	0.0	0.0
Liquid Permittivity (target)	5.00	R	1.732	0.23	0.26	0.7	0.8
Liquid Permittivity (mea.)	2.50	R	1.732	0.23	0.26	0.3	0.4
Temp. unc. - Permittivity	0.84	R	1.732	0.23	0.26	0.1	0.1
Combined Std. Uncertainty						11.6%	11.6%
Coverage Factor for 95 %						K=2	K=2
Expanded STD Uncertainty						23.2%	23.1%

Table 17.2. Uncertainty Budget for frequency range 300 MHz to 3 GHz

Error Description	Uncertainty Value (±%)	Probability	Divisor	(Ci) 1g	(Ci) 10g	Standard Uncertainty (1g) (±%)	Standard Uncertainty (10g) (±%)
Measurement System							
Probe Calibration	7.00	N	1	1	1	7.0	7.0
Axial Isotropy	4.70	R	1.732	0.7	0.7	1.9	1.9
Hemispherical Isotropy	9.60	R	1.732	0.7	0.7	3.9	3.9
Boundary Effects	2.00	R	1.732	1	1	1.2	1.2
Linearity	4.70	R	1.732	1	1	2.7	2.7
System Detection Limits	1.00	R	1.732	1	1	0.6	0.6
Modulation Response	4.68	R	1.732	1	1	2.7	2.7
Readout Electronics	0.30	N	1	1	1	0.3	0.3
Response Time	0.00	R	1.732	1	1	0.0	0.0
Integration Time	2.60	R	1.732	1	1	1.5	1.5
RF Ambient Noise	3.00	R	1.732	1	1	1.7	1.7
RF Ambient Reflections	3.00	R	1.732	1	1	1.7	1.7
Probe Positioner	0.40	R	1.732	1	1	0.2	0.2
Probe Positioning	6.70	R	1.732	1	1	3.9	3.9
Max. SAR Eval.	4.00	R	1.732	1	1	2.3	2.3
Test Sample Related							
Device Positioning	3.03	N	1	1	1	3.0	3.0
Device Holder	3.60	N	1	1	1	3.6	3.6
Power Drift	5.00	R	1.732	1	1	2.9	2.9
Power Scaling	0.00	R	1.732	1	1	0.0	0.0
Phantom and Setup							
Phantom Uncertainty	6.60	R	1.732	1	1	3.8	3.8
SAR correction	0.00	R	1.732	1	0.84	0.0	0.0
Liquid Conductivity Repeatability	0.03	N	1	0.78	0.71	0.0	0.0
Liquid Conductivity (target)	5.00	R	1.732	0.78	0.71	2.3	2.0
Liquid Conductivity (mea.)	2.50	R	1.732	0.78	0.71	1.1	1.0
Temp. unc. - Conductivity	3.68	R	1.732	0.78	0.71	1.7	1.5
Liquid Permittivity Repeatability	0.02	N	1	0.23	0.26	0.0	0.0
Liquid Permittivity (target)	5.00	R	1.732	0.23	0.26	0.7	0.8
Liquid Permittivity (mea.)	2.50	R	1.732	0.23	0.26	0.3	0.4
Temp. unc. - Permittivity	0.84	R	1.732	0.23	0.26	0.1	0.1
Combined Std. Uncertainty						12.9%	12.9%
Coverage Factor for 95 %						K=2	K=2
Expanded STD Uncertainty						25.9%	25.8%

Table 17.3. Uncertainty Budget for frequency range 3 GHz to 6 GHz

18. References

[1] FCC 47 CFR Part 2 “Frequency Allocations and Radio Treaty Matters; General Rules and Regulations”

[2] ANSI/IEEE Std. C95.1-1992, “IEEE Standard for Safety Levels with Respect to Human Exposure to Radio Frequency Electromagnetic Fields, 3 kHz to 300 GHz”, September 1992

[3] IEEE Std. 1528-2013, “IEEE Recommended Practice for Determining the Peak Spatial-Average Specific Absorption Rate (SAR) in the Human Head from Wireless Communications Devices: Measurement Techniques”, Sep 2013

[4] SPEAG DASY System Handbook

[5] FCC KDB 248227 D01 v02r02, “SAR Guidance for IEEE 802.11 (WiFi) Transmitters”, Oct 2015.

[6] FCC KDB 447498 D01 v06, “Mobile and Portable Device RF Exposure Procedures and Equipment Authorization Policies”, Oct 2015

[7] FCC KDB 648474 D04 v01r03, “SAR Evaluation Considerations for Wireless Handsets”, Oct 2015.

[8] FCC KDB 941225 D01 v03r01, “3G SAR MEAUREMENT PROCEDURES”, Oct 2015

[9] FCC KDB 941225 D05 v02r05, “SAR Evaluation Considerations for LTE Devices”, Dec 2015

[10] FCC KDB 941225 D05A v01r02, “Rel. 10 LTE SAR Test Guidance and KDB Inquiries”, Oct 2015

[11] FCC KDB 941225 D06 v02r01, "SAR Evaluation Procedures for Portable Devices with Wireless Router Capabilities", Oct 2015.

[12] FCC KDB 865664 D01 v01r04, "SAR Measurement Requirements for 100 MHz to 6 GHz", Aug 2015.

[13] FCC KDB 865664 D02 v01r02, “RF Exposure Compliance Reporting and Documentation Considerations” Oct 2015.

Appendix A. Plots of System Performance Check

The plots are shown as follows.

System Check_Head_835MHz

DUT: D835V2-4d200

Communication System: CW; Frequency: 835 MHz;Duty Cycle: 1:1
Medium: HSL_850_161020 Medium parameters used: f = 835 MHz; σ = 0.892 S/m; ε_r = 43.176; ρ = 1000 kg/m^3
Ambient Temperature：23.4 ℃; Liquid Temperature：22.4 ℃

DASY5 Configuration
- Probe: EX3DV4 - SN3820; ConvF(9, 9, 9); Calibrated: 2016/6/27;
- Sensor-Surface: 1.4mm (Mechanical Surface Detection)
- Electronics: DAE4 Sn679; Calibrated: 2016/6/13
- Phantom: SAM_Left; Type: QD000P40CD; Serial: S/N:1796
- Measurement SW: DASY52, Version 52.8 (8); SEMCAD X Version 14.6.10 (7373)

Pin=250mW/Area Scan (61x61x1): Interpolated grid: dx=1.500 mm, dy=1.500 mm
Maximum value of SAR (interpolated) = 3.27 W/kg

Pin=250mW/Zoom Scan (5x5x7)/Cube 0: Measurement grid: dx=8mm, dy=8mm, dz=5mm
Reference Value = 62.11 V/m; Power Drift = -0.02 dB
Peak SAR (extrapolated) = 3.61 W/kg
SAR(1 g) = 2.46 W/kg; SAR(10 g) = 1.66 W/kg
Maximum value of SAR (measured) = 3.18 W/kg

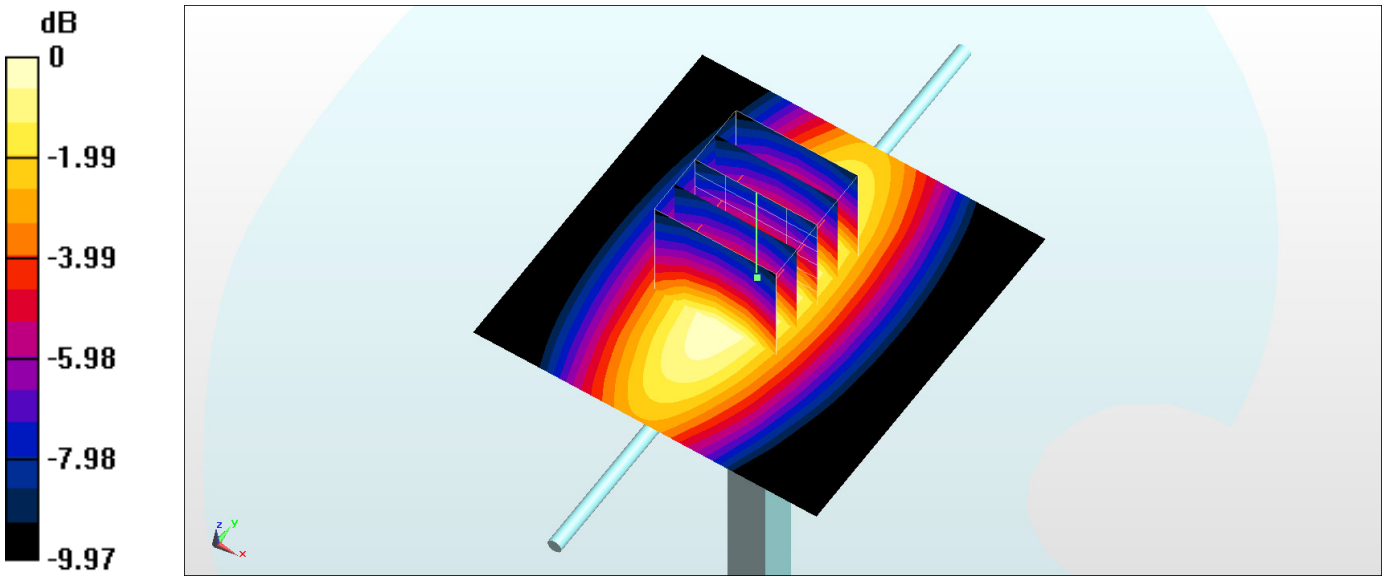

0 dB = 3.18 W/kg = 5.02 dBW/kg

System Check_Body_835MHz

DUT: D835V2-4d200

Communication System: CW; Frequency: 835 MHz;Duty Cycle: 1:1
Medium: MSL_850_161020 Medium parameters used: f = 835 MHz; σ = 0.979 S/m; ε_r = 56.473; ρ = 1000 kg/m^3
Ambient Temperature：23.8 ℃; Liquid Temperature：22.8 ℃

DASY5 Configuration
- Probe: EX3DV4 - SN3820; ConvF(8.86, 8.86, 8.86); Calibrated: 2016/6/27;
- Sensor-Surface: 1.4mm (Mechanical Surface Detection)
- Electronics: DAE4 Sn679; Calibrated: 2016/6/13
- Phantom: SAM_Left; Type: QD000P40CD; Serial: S/N:1796
- Measurement SW: DASY52, Version 52.8 (8); SEMCAD X Version 14.6.10 (7373)

Pin=250mW/Area Scan (61x61x1): Interpolated grid: dx=1.500 mm, dy=1.500 mm
Maximum value of SAR (interpolated) = 3.45 W/kg

Pin=250mW/Zoom Scan (5x5x7)/Cube 0: Measurement grid: dx=8mm, dy=8mm, dz=5mm
Reference Value = 60.83 V/m; Power Drift = -0.04 dB
Peak SAR (extrapolated) = 3.81 W/kg
SAR(1 g) = 2.59 W/kg; SAR(10 g) = 1.72 W/kg
Maximum value of SAR (measured) = 3.39 W/kg

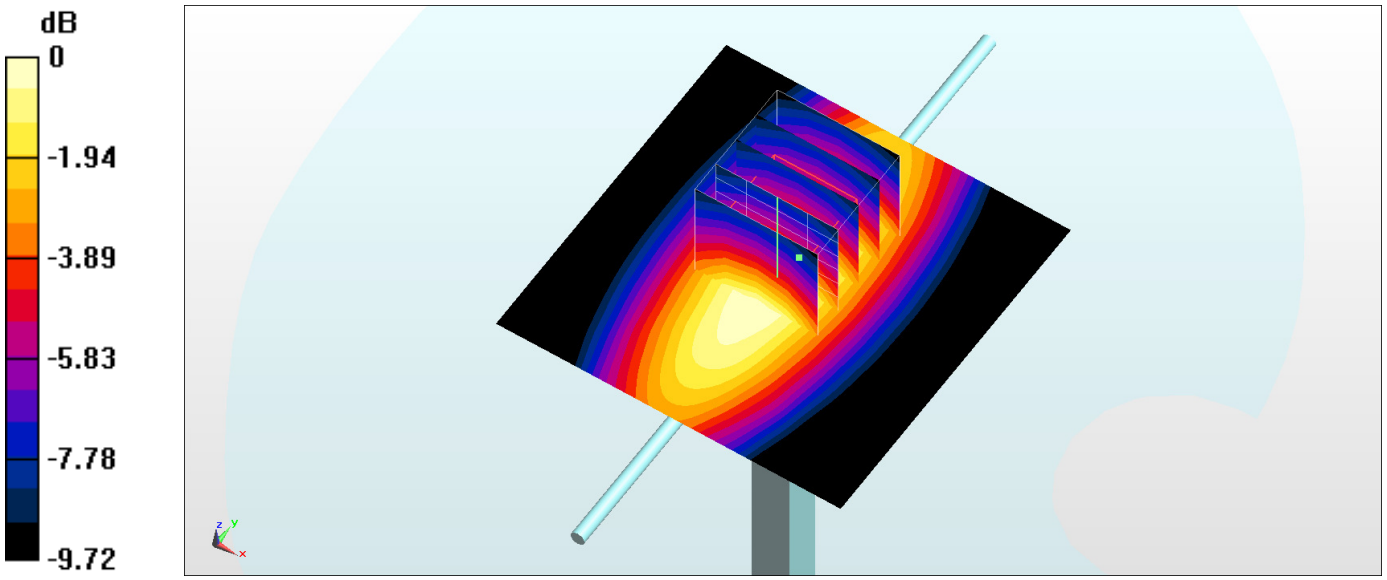

0 dB = 3.39 W/kg = 5.30 dBW/kg

System Check_Head_1900MHz

DUT: D1900V2-5d210

Communication System: CW; Frequency: 1900 MHz;Duty Cycle: 1:1
Medium: HSL_1900_161021 Medium parameters used: f = 1900 MHz; σ = 1.416 S/m; ε_r = 41.59; ρ = 1000 kg/m^3
Ambient Temperature：23.6 ℃; Liquid Temperature：22.6 ℃

DASY5 Configuration
- Probe: EX3DV4 - SN3820; ConvF(7.8, 7.8, 7.8); Calibrated: 2016/6/27;
- Sensor-Surface: 1.4mm (Mechanical Surface Detection)
- Electronics: DAE4 Sn679; Calibrated: 2016/6/13
- Phantom: SAM_Left; Type: QD000P40CD; Serial: S/N:1796
- Measurement SW: DASY52, Version 52.8 (8); SEMCAD X Version 14.6.10 (7373)

Pin=250mW/Area Scan (61x61x1): Interpolated grid: dx=1.500 mm, dy=1.500 mm
Maximum value of SAR (interpolated) = 15.0 W/kg

Pin=250mW/Zoom Scan (5x5x7)/Cube 0: Measurement grid: dx=8mm, dy=8mm, dz=5mm
Reference Value = 103.2 V/m; Power Drift = -0.01 dB
Peak SAR (extrapolated) = 17.6 W/kg
SAR(1 g) = 9.69 W/kg; SAR(10 g) = 5.16 W/kg
Maximum value of SAR (measured) = 14.6 W/kg

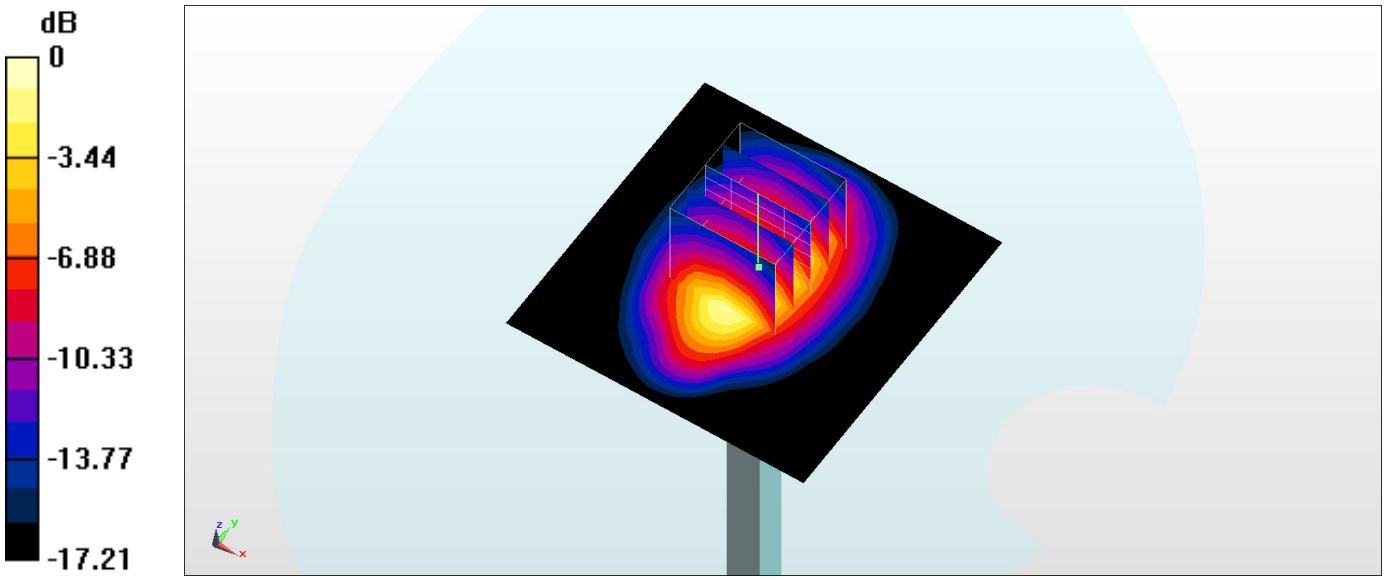

0 dB = 14.6 W/kg = 11.64 dBW/kg

System Check_Body_1900MHz

DUT: D1900V2-5d210

Communication System: CW; Frequency: 1900 MHz;Duty Cycle: 1:1
Medium: MSL_1900_161017 Medium parameters used: f = 1900 MHz; σ = 1.55 S/m; ε_r = 55.257; ρ = 1000 kg/m^3
Ambient Temperature：23.3 ℃; Liquid Temperature：22.3 ℃

DASY5 Configuration
- Probe: EX3DV4 - SN3820; ConvF(7.41, 7.41, 7.41); Calibrated: 2016/6/27;
- Sensor-Surface: 1.4mm (Mechanical Surface Detection)
- Electronics: DAE4 Sn679; Calibrated: 2016/6/13
- Phantom: SAM_Right; Type: QD000P40CD; Serial: S/N:1801
- Measurement SW: DASY52, Version 52.8 (8); SEMCAD X Version 14.6.10 (7373)

Pin=250mW/Area Scan (61x61x1): Interpolated grid: dx=1.500 mm, dy=1.500 mm
Maximum value of SAR (interpolated) = 15.1 W/kg

Pin=250mW/Zoom Scan (5x5x7)/Cube 0: Measurement grid: dx=8mm, dy=8mm, dz=5mm
Reference Value = 102.2 V/m; Power Drift = -0.15 dB
Peak SAR (extrapolated) = 17.7 W/kg
SAR(1 g) = 10 W/kg; SAR(10 g) = 5.37 W/kg
Maximum value of SAR (measured) = 14.9 W/kg

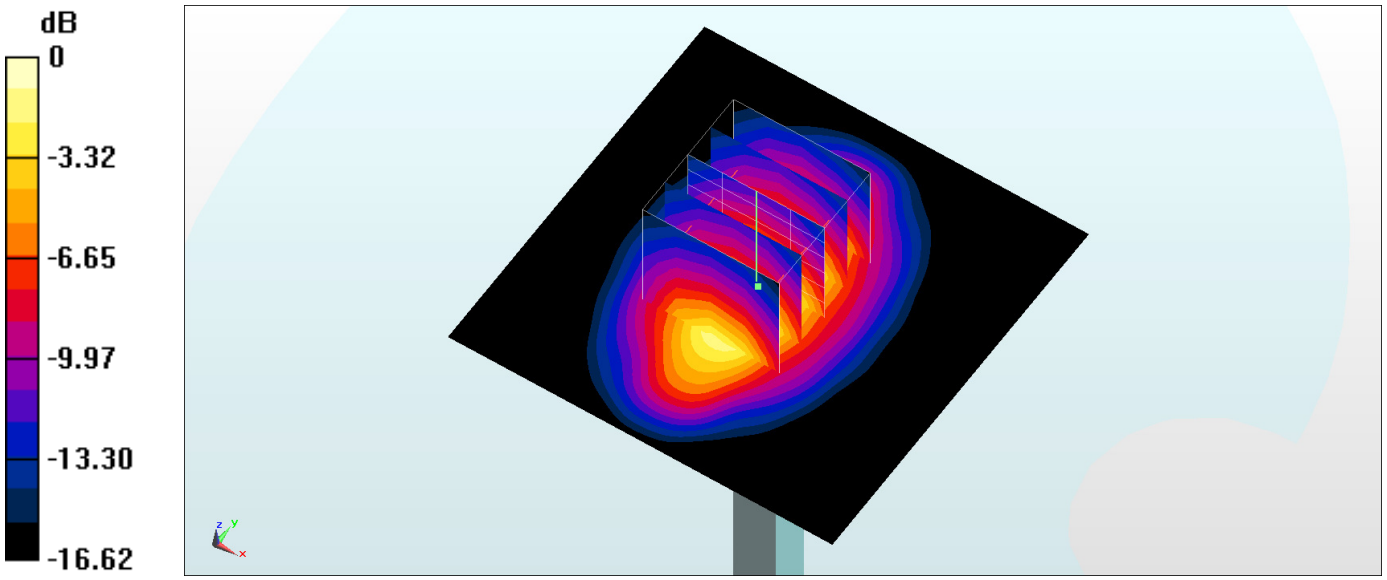

0 dB = 14.9 W/kg = 11.73 dBW/kg

System Check_Body_1900MHz

DUT: D1900V2-5d210

Communication System: CW; Frequency: 1900 MHz;Duty Cycle: 1:1
Medium: MSL_1900_161019 Medium parameters used: f = 1900 MHz; σ = 1.518 S/m; ε_r = 54.712; ρ = 1000 kg/m^3
Ambient Temperature：23.2 ℃; Liquid Temperature：22.2 ℃

DASY5 Configuration
- Probe: EX3DV4 - SN3820; ConvF(7.41, 7.41, 7.41); Calibrated: 2016/6/27;
- Sensor-Surface: 1.4mm (Mechanical Surface Detection)
- Electronics: DAE4 Sn679; Calibrated: 2016/6/13
- Phantom: SAM_Left; Type: QD000P40CD; Serial: S/N:1796
- Measurement SW: DASY52, Version 52.8 (8); SEMCAD X Version 14.6.10 (7373)

Pin=250mW/Area Scan (61x61x1): Interpolated grid: dx=1.500 mm, dy=1.500 mm
Maximum value of SAR (interpolated) = 15.2 W/kg

Pin=250mW/Zoom Scan (5x5x7)/Cube 0: Measurement grid: dx=8mm, dy=8mm, dz=5mm
Reference Value = 102.2 V/m; Power Drift = -0.03 dB
Peak SAR (extrapolated) = 17.7 W/kg
SAR(1 g) = 10.1 W/kg; SAR(10 g) = 5.43 W/kg
Maximum value of SAR (measured) = 14.9 W/kg

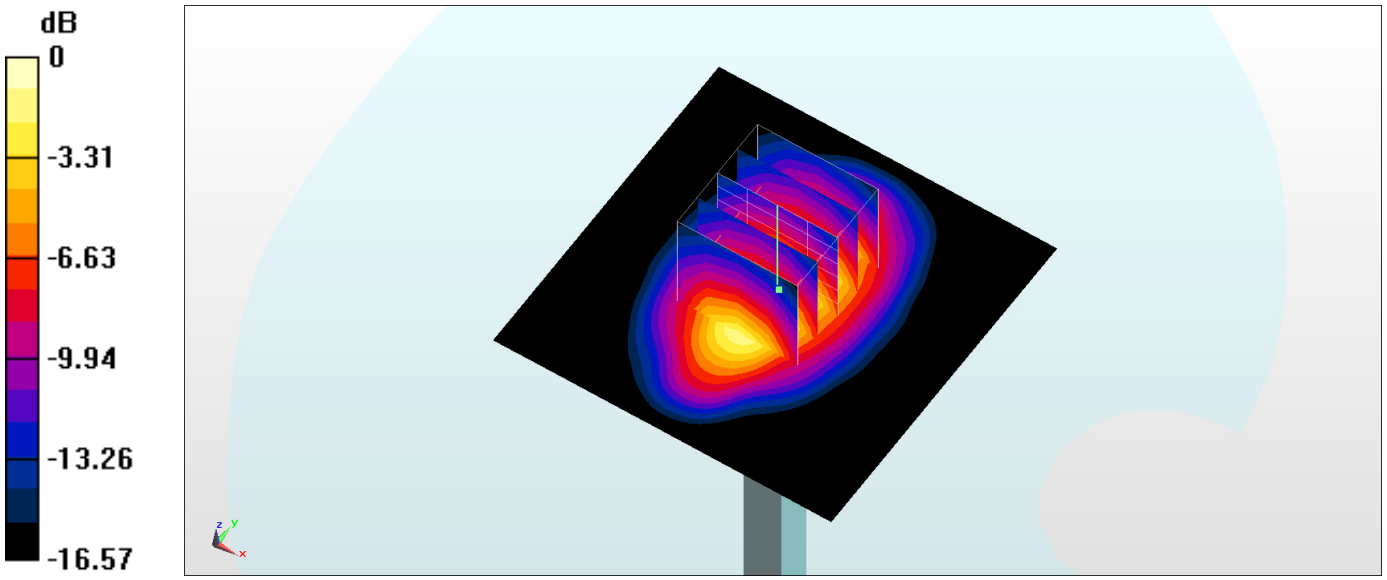

0 dB = 14.9 W/kg = 11.73 dBW/kg

System Check_Head_2450MHz

DUT: D2450V2-926

Communication System: CW; Frequency: 2450 MHz;Duty Cycle: 1:1
Medium: HSL_2450_161103 Medium parameters used: f = 2450 MHz; σ = 1.798 S/m; ε_r = 39.866; ρ = 1000 kg/m^3
Ambient Temperature：23.5 ℃; Liquid Temperature：22.5 ℃

DASY5 Configuration
- Probe: EX3DV4 - SN3931; ConvF(7.6, 7.6, 7.6); Calibrated: 2016/10/3;
- Sensor-Surface: 1.4mm (Mechanical Surface Detection)
- Electronics: DAE3 Sn577; Calibrated: 2016/9/28
- Phantom: SAM_Right; Type: QD000P40CD; Serial: S/N:1801
- Measurement SW: DASY52, Version 52.8 (8); SEMCAD X Version 14.6.10 (7373)

Pin=250mW/Area Scan (71x71x1): Interpolated grid: dx=1.200 mm, dy=1.200 mm
Maximum value of SAR (interpolated) = 20.4 W/kg

Pin=250mW/Zoom Scan (7x7x7)/Cube 0: Measurement grid: dx=5mm, dy=5mm, dz=5mm
Reference Value = 114.9 V/m; Power Drift = 0.10 dB
Peak SAR (extrapolated) = 28.1 W/kg
SAR(1 g) = 13.4 W/kg; SAR(10 g) = 6.25 W/kg
Maximum value of SAR (measured) = 22.6 W/kg

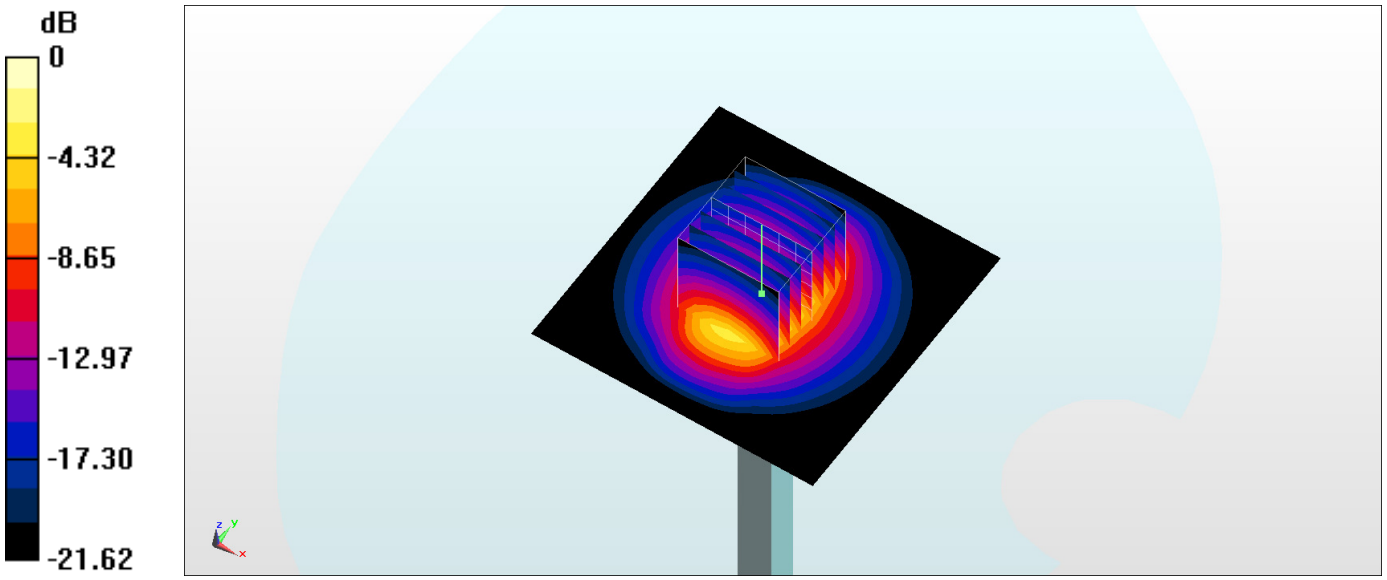

0 dB = 22.6 W/kg = 13.54 dBW/kg

System Check_Body_2450MHz

DUT: D2450V2-926

Communication System: CW ; Frequency: 2450 MHz;Duty Cycle: 1:1
Medium: MSL_2450_161103 Medium parameters used: f = 2450 MHz; σ = 1.899 S/m; ε_r = 52.183; ρ = 1000 kg/m^3
Ambient Temperature：23.5 ℃; Liquid Temperature：22.5 ℃

DASY5 Configuration
- Probe: EX3DV4 - SN3820; ConvF(6.79, 6.79, 6.79); Calibrated: 2016/6/27;
- Sensor-Surface: 1.4mm (Mechanical Surface Detection)
- Electronics: DAE4 Sn679; Calibrated: 2016/6/13
- Phantom: SAM_Left; Type: QD000P40CD; Serial: S/N:1796
- Measurement SW: DASY52, Version 52.8 (8); SEMCAD X Version 14.6.10 (7373)

Pin=250mW/Area Scan (61x61x1): Interpolated grid: dx=1.200 mm, dy=1.200 mm
Maximum value of SAR (interpolated) = 20.3 W/kg

Pin=250mW/Zoom Scan (7x7x7)/Cube 0: Measurement grid: dx=5mm, dy=5mm, dz=5mm
Reference Value = 105.1 V/m; Power Drift = -0.19 dB
Peak SAR (extrapolated) = 23.8 W/kg
SAR(1 g) = 12.5 W/kg; SAR(10 g) = 6.12 W/kg
Maximum value of SAR (measured) = 19.9 W/kg

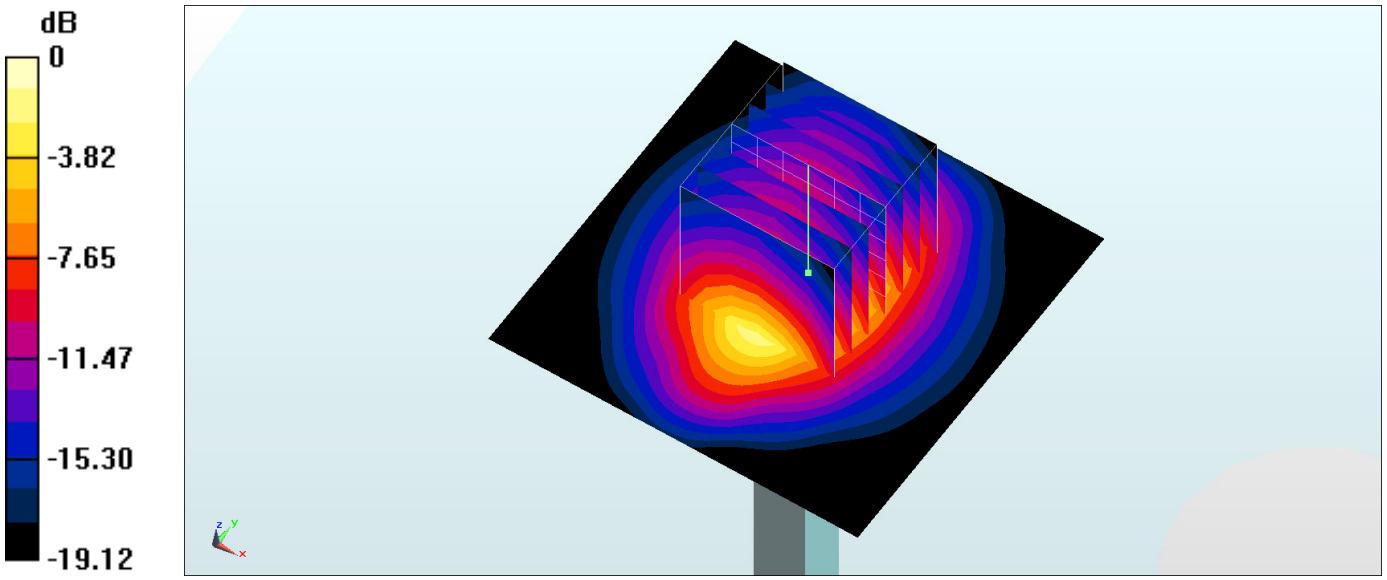

0 dB = 19.9 W/kg = 12.99 dBW/kg

System Check_Body_2450MHz

DUT: D2450V2-926

Communication System: CW ; Frequency: 2450 MHz;Duty Cycle: 1:1
Medium: MSL_2450_161103 Medium parameters used: f = 2450 MHz; σ = 1.899 S/m; ε_r = 52.183; ρ = 1000 kg/m^3
Ambient Temperature：23.5 ℃; Liquid Temperature：22.5 ℃

DASY5 Configuration
- Probe: EX3DV4 - SN3931; ConvF(7.73, 7.73, 7.73); Calibrated: 2016/10/3;
- Sensor-Surface: 1.4mm (Mechanical Surface Detection)
- Electronics: DAE3 Sn577; Calibrated: 2016/9/28
- Phantom: SAM_Left; Type: QD000P40CD; Serial: S/N:1796
- Measurement SW: DASY52, Version 52.8 (8); SEMCAD X Version 14.6.10 (7373)

Pin=250mW/Area Scan (61x61x1): Interpolated grid: dx=1.200 mm, dy=1.200 mm
Maximum value of SAR (interpolated) = 20.5 W/kg

Pin=250mW/Zoom Scan (7x7x7)/Cube 0: Measurement grid: dx=5mm, dy=5mm, dz=5mm
Reference Value = 107.2 V/m; Power Drift = -0.14 dB
Peak SAR (extrapolated) = 24.5 W/kg
SAR(1 g) = 12.2 W/kg; SAR(10 g) = 5.79 W/kg
Maximum value of SAR (measured) = 20.2 W/kg

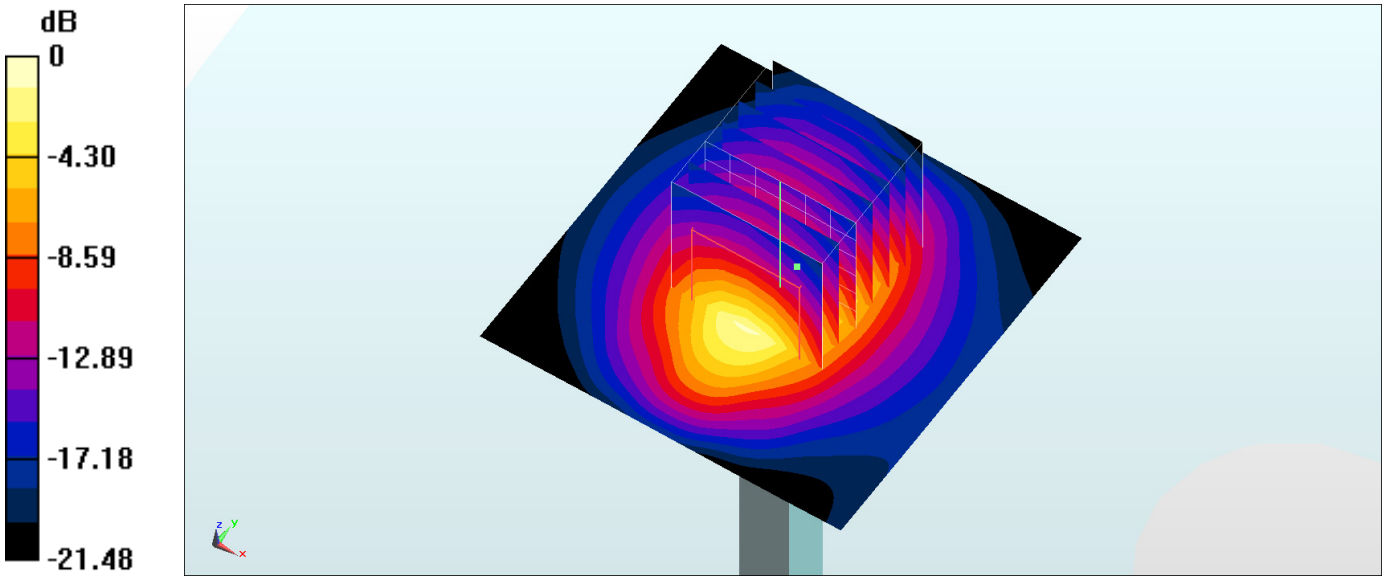

0 dB = 20.2 W/kg = 13.05 dBW/kg

System Check_Head_2600MHz

DUT: D2600V2-1113

Communication System: CW; Frequency: 2600 MHz;Duty Cycle: 1:1
Medium: HSL_2600_161021 Medium parameters used: f = 2600 MHz; σ = 1.924 S/m; ε_r = 38.52; ρ = 1000 kg/m^3
Ambient Temperature：23.2 ℃; Liquid Temperature：22.2 ℃

DASY5 Configuration
- Probe: EX3DV4 - SN3820; ConvF(6.49, 6.49, 6.49); Calibrated: 2016/6/27;
- Sensor-Surface: 1.4mm (Mechanical Surface Detection)
- Electronics: DAE4 Sn679; Calibrated: 2016/6/13
- Phantom: SAM_Right; Type: QD000P40CD; Serial: S/N:1801
- Measurement SW: DASY52, Version 52.8 (8); SEMCAD X Version 14.6.10 (7373)

Pin=250mW/Area Scan (61x61x1): Interpolated grid: dx=1.200 mm, dy=1.200 mm
Maximum value of SAR (interpolated) = 23.6 W/kg

Pin=250mW/Zoom Scan (7x7x7)/Cube 0: Measurement grid: dx=5mm, dy=5mm, dz=5mm
Reference Value = 107.3 V/m; Power Drift = -0.01 dB
Peak SAR (extrapolated) = 29.0 W/kg
SAR(1 g) = 14.1 W/kg; SAR(10 g) = 6.55 W/kg
Maximum value of SAR (measured) = 23.4 W/kg

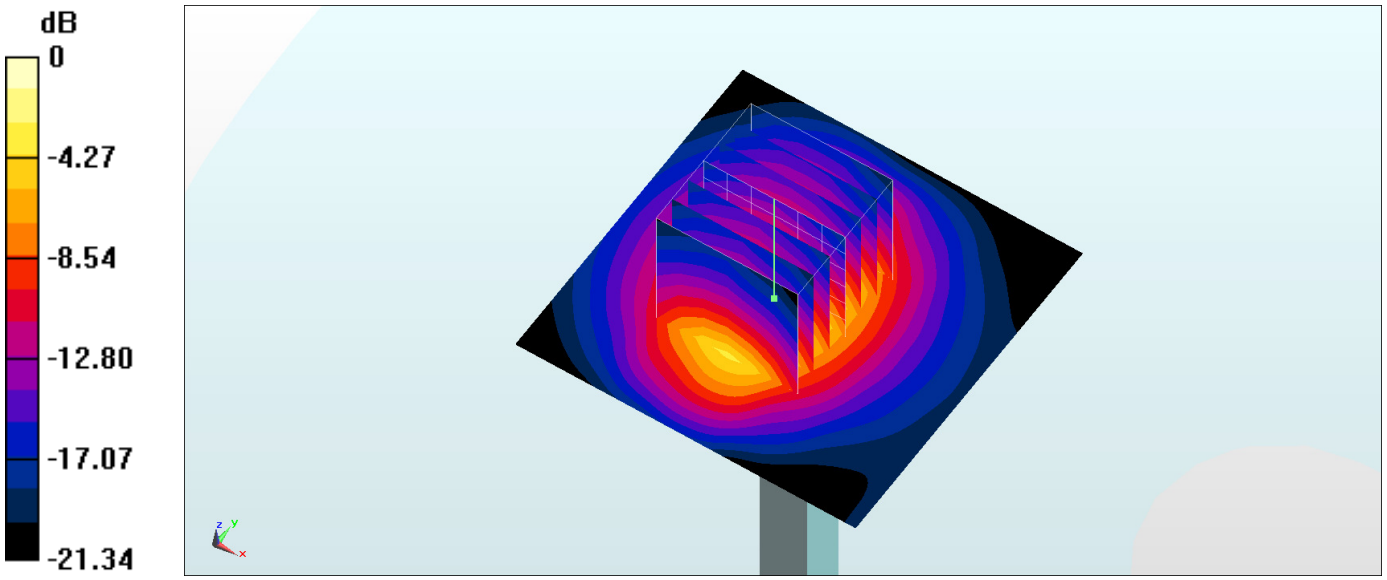

0 dB = 23.4 W/kg = 13.69 dBW/kg

System Check_Body_2600MHz

DUT: D2600V2-1113

Communication System: CW; Frequency: 2600 MHz;Duty Cycle: 1:1
Medium: MSL_2600_161018 Medium parameters used: f = 2600 MHz; σ = 2.154 S/m; ε_r = 52.74; ρ = 1000 kg/m^3
Ambient Temperature：23.6 ℃; Liquid Temperature：22.6 ℃

DASY5 Configuration
- Probe: EX3DV4 - SN3820; ConvF(6.52, 6.52, 6.52); Calibrated: 2016/6/27;
- Sensor-Surface: 1.4mm (Mechanical Surface Detection)
- Electronics: DAE4 Sn679; Calibrated: 2016/6/13
- Phantom: SAM_Left; Type: QD000P40CD; Serial: S/N:1796
- Measurement SW: DASY52, Version 52.8 (8); SEMCAD X Version 14.6.10 (7373)

Pin=250mW/Area Scan (61x61x1): Interpolated grid: dx=1.200 mm, dy=1.200 mm
Maximum value of SAR (interpolated) = 23.6 W/kg

Pin=250mW/Zoom Scan (7x7x7)/Cube 0: Measurement grid: dx=5mm, dy=5mm, dz=5mm
Reference Value = 107.7 V/m; Power Drift = -0.04 dB
Peak SAR (extrapolated) = 29.3 W/kg
SAR(1 g) = 14.4 W/kg; SAR(10 g) = 6.63 W/kg
Maximum value of SAR (measured) = 23.7 W/kg

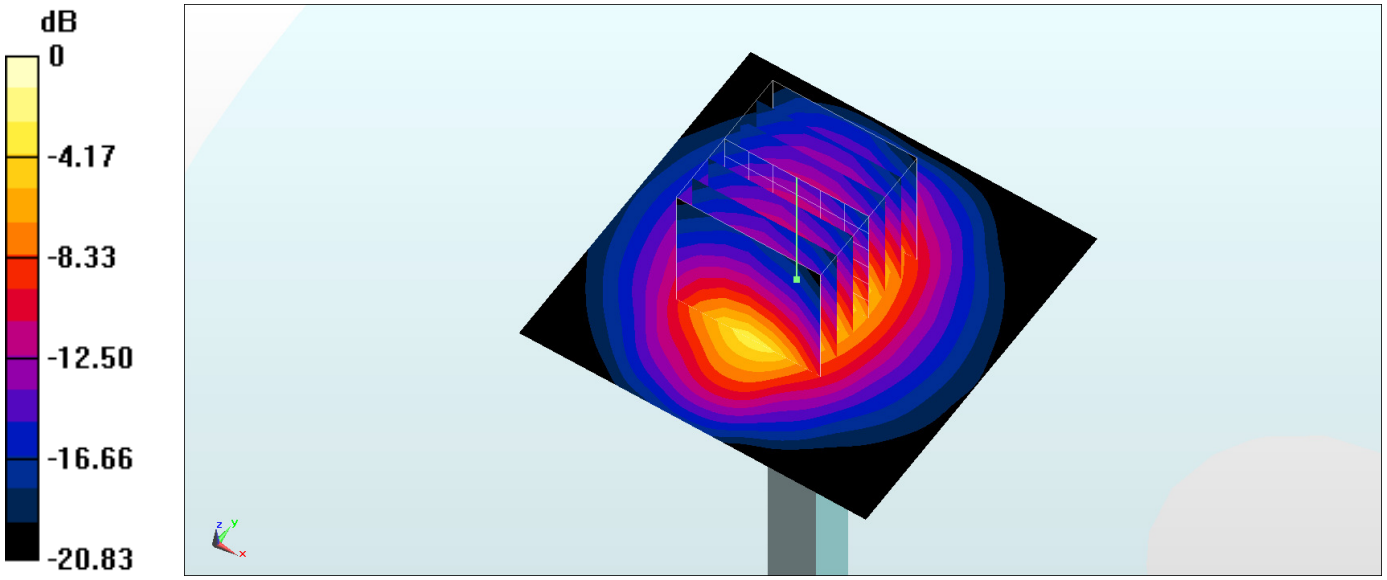

0 dB = 23.7 W/kg = 13.75 dBW/kg

System Check_Body_2600MHz

DUT: D2600V2-1113

Communication System: CW; Frequency: 2600 MHz;Duty Cycle: 1:1
Medium: MSL_2600_161020 Medium parameters used: f = 2600 MHz; σ = 2.151 S/m; ε_r = 52.823; ρ = 1000 kg/m^3
Ambient Temperature：23.7 ℃; Liquid Temperature：22.7 ℃

DASY5 Configuration
- Probe: EX3DV4 - SN3820; ConvF(6.52, 6.52, 6.52); Calibrated: 2016/6/27;
- Sensor-Surface: 1.4mm (Mechanical Surface Detection)
- Electronics: DAE4 Sn679; Calibrated: 2016/6/13
- Phantom: SAM_Right; Type: QD000P40CD; Serial: S/N:1801
- Measurement SW: DASY52, Version 52.8 (8); SEMCAD X Version 14.6.10 (7373)

Pin=250mW/Area Scan (61x61x1): Interpolated grid: dx=1.200 mm, dy=1.200 mm
Maximum value of SAR (interpolated) = 23.3 W/kg

Pin=250mW/Zoom Scan (7x7x7)/Cube 0: Measurement grid: dx=5mm, dy=5mm, dz=5mm
Reference Value = 108.1 V/m; Power Drift = -0.12 dB
Peak SAR (extrapolated) = 28.5 W/kg
SAR(1 g) = 14.1 W/kg; SAR(10 g) = 6.51 W/kg
Maximum value of SAR (measured) = 23.4 W/kg

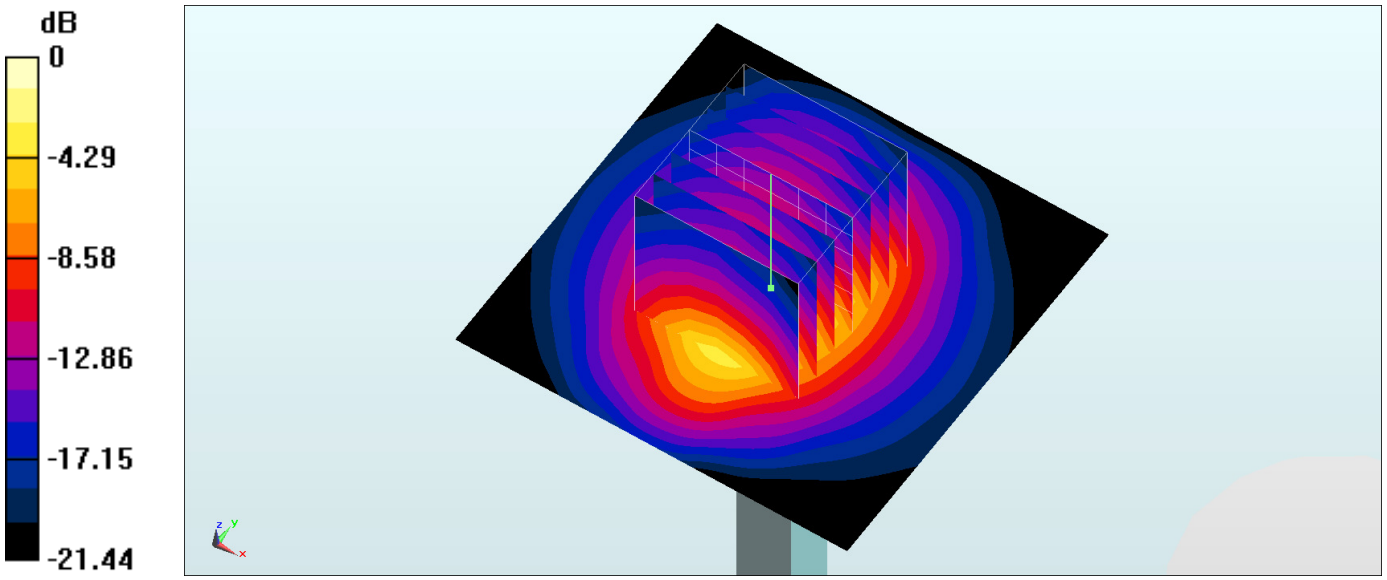

0 dB = 23.4 W/kg = 13.69 dBW/kg

System Check_Head_5300MHz

DUT: D5GHzV2-1040

Communication System: CW; Frequency: 5300 MHz;Duty Cycle: 1:1
Medium: HSL_5G_161024 Medium parameters used: f = 5300 MHz; σ = 4.712 S/m; ε_r = 37.267; ρ = 1000 kg/m^3
Ambient Temperature：23.5 ℃; Liquid Temperature：22.5 ℃

DASY5 Configuration
- Probe: EX3DV4 - SN3820; ConvF(4.41, 4.41, 4.41); Calibrated: 2016/6/27;
- Sensor-Surface: 1.4mm (Mechanical Surface Detection)
- Electronics: DAE4 Sn679; Calibrated: 2016/6/13
- Phantom: SAM_Right; Type: QD000P40CD; Serial: S/N:1801
- Measurement SW: DASY52, Version 52.8 (8); SEMCAD X Version 14.6.10 (7373)

Pin=100mW/Area Scan (71x71x1): Interpolated grid: dx=1.000 mm, dy=1.000 mm
Maximum value of SAR (interpolated) = 18.8 W/kg

Pin=100mW/Zoom Scan (7x7x7)/Cube 0: Measurement grid: dx=4mm, dy=4mm, dz=1.4mm
Reference Value = 68.21 V/m; Power Drift = -0.02 dB
Peak SAR (extrapolated) = 30.9 W/kg
SAR(1 g) = 8.41 W/kg; SAR(10 g) = 2.53 W/kg
Maximum value of SAR (measured) = 19.3 W/kg

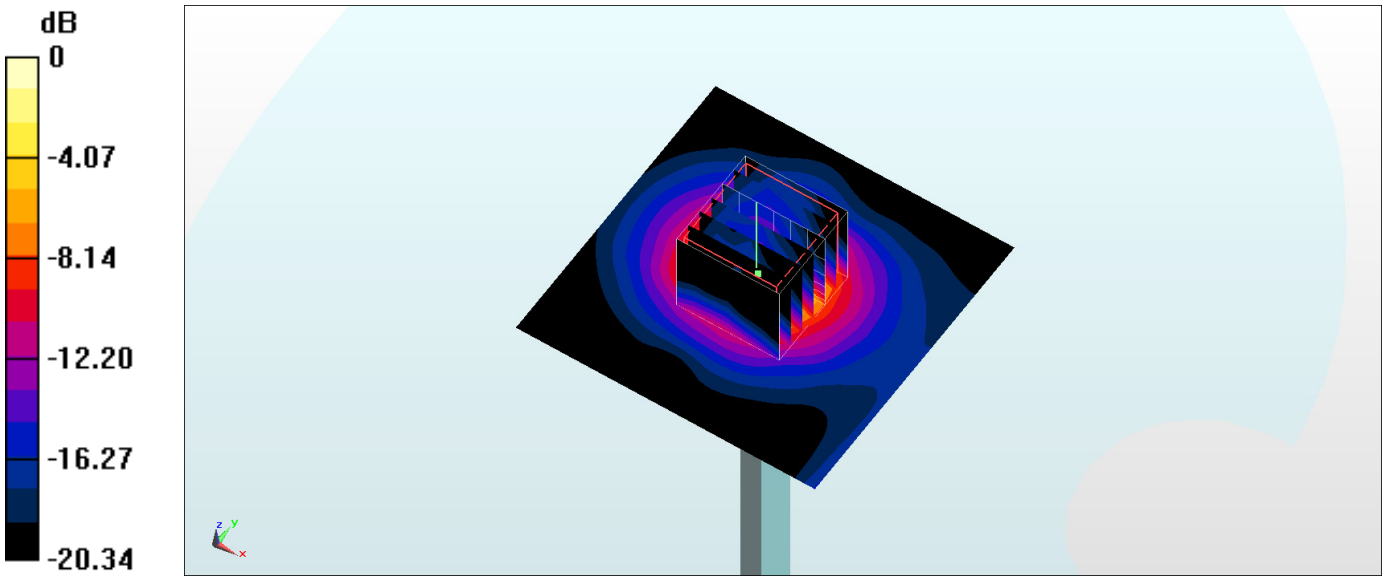

0 dB = 19.3 W/kg = 12.86 dBW/kg

System Check_Body_5300MHz

DUT: D5GHzV2-1040

Communication System: CW ; Frequency: 5300 MHz;Duty Cycle: 1:1
Medium: MSL_5G_161026 Medium parameters used: f = 5300 MHz; σ = 5.592 S/m; ε_r = 46.846; ρ = 1000 kg/m^3
Ambient Temperature：23.5 ℃; Liquid Temperature：22.5 ℃

DASY5 Configuration
- Probe: EX3DV4 - SN3820; ConvF(3.95, 3.95, 3.95); Calibrated: 2016/6/27;
- Sensor-Surface: 1.4mm (Mechanical Surface Detection)
- Electronics: DAE4 Sn679; Calibrated: 2016/6/13
- Phantom: SAM_Right; Type: QD000P40CD; Serial: S/N:1801
- Measurement SW: DASY52, Version 52.8 (8); SEMCAD X Version 14.6.10 (7373)

Pin=100mW/Area Scan (71x71x1): Interpolated grid: dx=1.000 mm, dy=1.000 mm
Maximum value of SAR (interpolated) = 17.7 W/kg

Pin=100mW/Zoom Scan (7x7x7)/Cube 0: Measurement grid: dx=4mm, dy=4mm, dz=1.4mm
Reference Value = 67.67 V/m; Power Drift = -0.01 dB
Peak SAR (extrapolated) = 29.0 W/kg
SAR(1 g) = 8.09 W/kg; SAR(10 g) = 2.29 W/kg
Maximum value of SAR (measured) = 18.6 W/kg

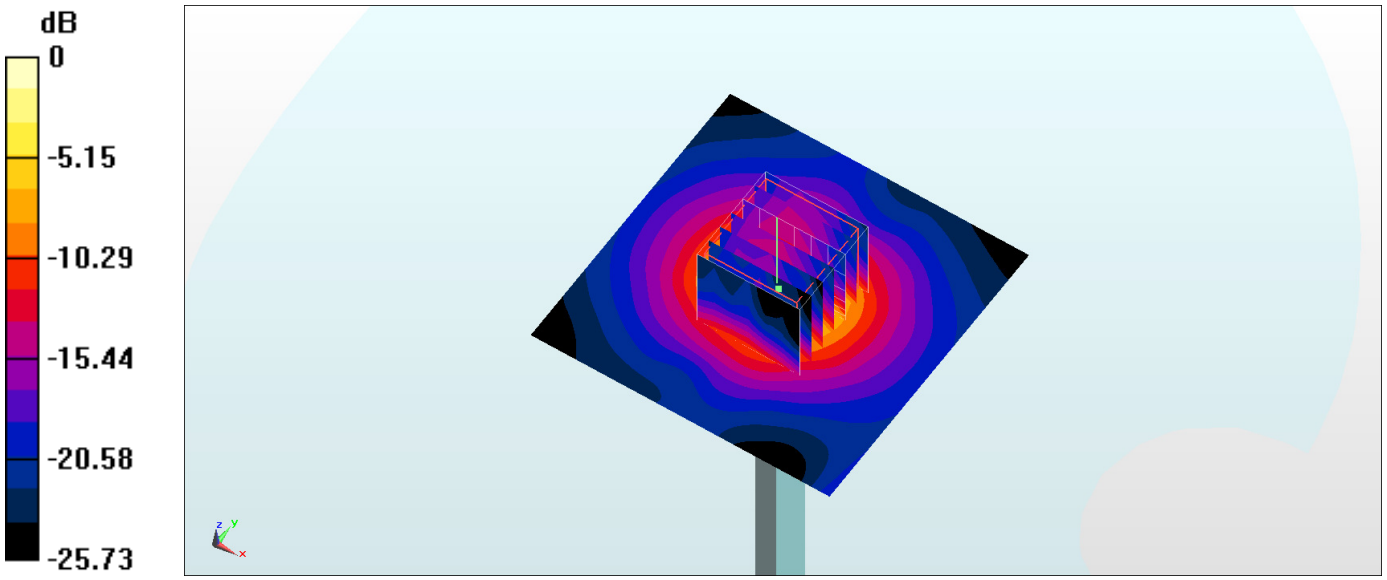

0 dB = 18.6 W/kg = 12.70 dBW/kg

System Check_Head_5600MHz

DUT: D5GHzV2-1040

Communication System: CW; Frequency: 5600 MHz;Duty Cycle: 1:1
Medium: HSL_5G_161024 Medium parameters used: f = 5600 MHz; σ = 5.019 S/m; ε_r = 36.838; ρ = 1000 kg/m^3
Ambient Temperature：23.5 ℃; Liquid Temperature：22.5 ℃

DASY5 Configuration
- Probe: EX3DV4 - SN3820; ConvF(4.14, 4.14, 4.14); Calibrated: 2016/6/27;
- Sensor-Surface: 1.4mm (Mechanical Surface Detection)
- Electronics: DAE4 Sn679; Calibrated: 2016/6/13
- Phantom: SAM_Right; Type: QD000P40CD; Serial: S/N:1801
- Measurement SW: DASY52, Version 52.8 (8); SEMCAD X Version 14.6.10 (7373)

Pin=100mW/Area Scan (71x71x1): Interpolated grid: dx=1.000 mm, dy=1.000 mm
Maximum value of SAR (interpolated) = 18.7 W/kg

Pin=100mW/Zoom Scan (7x7x7)/Cube 0: Measurement grid: dx=4mm, dy=4mm, dz=1.4mm
Reference Value = 68.12 V/m; Power Drift = 0.08 dB
Peak SAR (extrapolated) = 31.9 W/kg
SAR(1 g) = 8.04 W/kg; SAR(10 g) = 2.34 W/kg
Maximum value of SAR (measured) = 19.1 W/kg

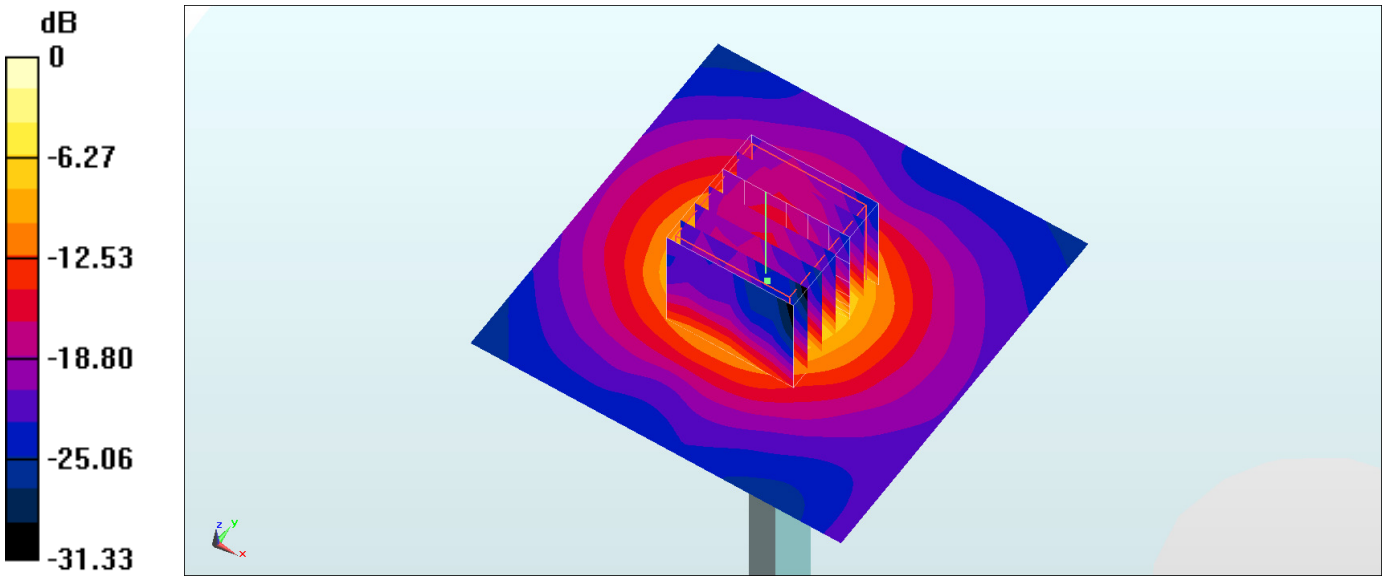

0 dB = 19.1 W/kg = 12.81 dBW/kg

System Check_Body_5600MHz

DUT: D5GHzV2-1040

Communication System: CW; Frequency: 5600 MHz;Duty Cycle: 1:1
Medium: MSL_5G_161026 Medium parameters used: f = 5600 MHz; σ = 5.989 S/m; ε_r = 46.334; ρ = 1000 kg/m^3
Ambient Temperature：23.5 ℃; Liquid Temperature：22.5 ℃

DASY5 Configuration
- Probe: EX3DV4 - SN3820; ConvF(3.54, 3.54, 3.54); Calibrated: 2016/6/27;
- Sensor-Surface: 1.4mm (Mechanical Surface Detection)
- Electronics: DAE4 Sn679; Calibrated: 2016/6/13
- Phantom: SAM_Right; Type: QD000P40CD; Serial: S/N:1801
- Measurement SW: DASY52, Version 52.8 (8); SEMCAD X Version 14.6.10 (7373)

Pin=100mW/Area Scan (71x71x1): Interpolated grid: dx=1.000 mm, dy=1.000 mm
Maximum value of SAR (interpolated) = 20.2 W/kg

Pin=100mW/Zoom Scan (7x7x7)/Cube 0: Measurement grid: dx=4mm, dy=4mm, dz=1.4mm
Reference Value = 68.27 V/m; Power Drift = -0.12 dB
Peak SAR (extrapolated) = 30.7 W/kg
SAR(1 g) = 7.72 W/kg; SAR(10 g) = 2.26 W/kg
Maximum value of SAR (measured) = 18.8 W/kg

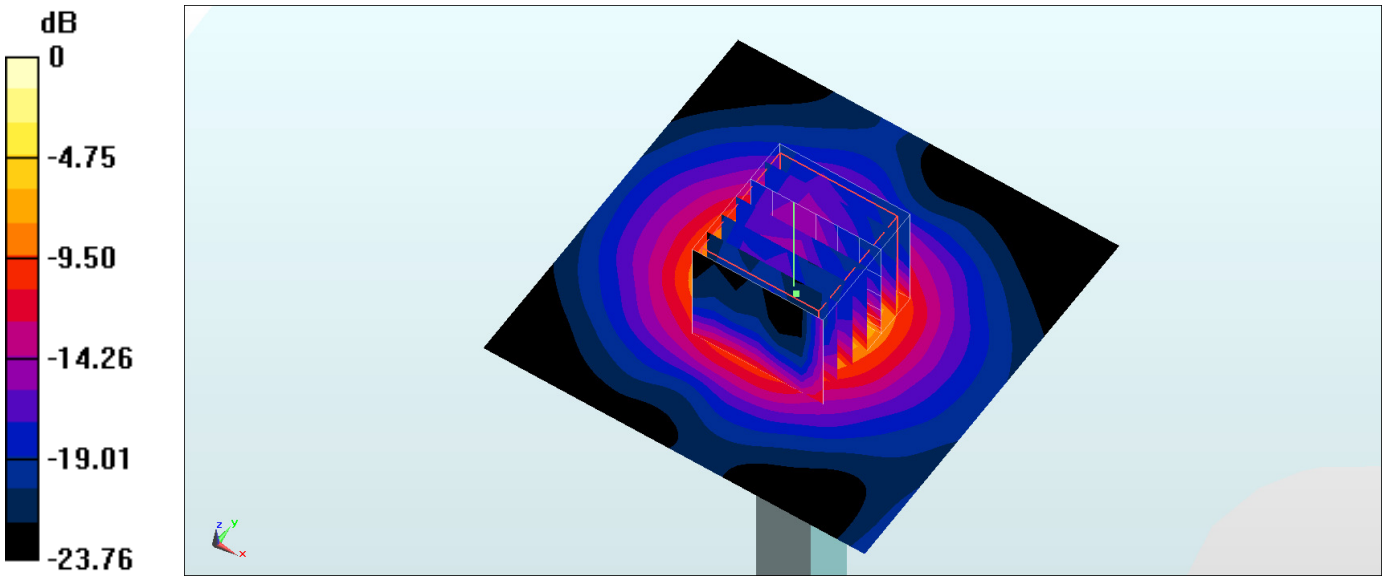

0 dB = 18.8 W/kg = 12.74 dBW/kg

System Check_Head_5800MHz

DUT: D5GHzV2-1040

Communication System: CW; Frequency: 5800 MHz;Duty Cycle: 1:1
Medium: HSL_5G_161024 Medium parameters used: f = 5800 MHz; σ = 5.224 S/m; ε_r = 36.58; ρ = 1000 kg/m^3
Ambient Temperature：23.5 ℃; Liquid Temperature：22.5 ℃

DASY5 Configuration
- Probe: EX3DV4 - SN3820; ConvF(4.14, 4.14, 4.14); Calibrated: 2016/6/27;
- Sensor-Surface: 1.4mm (Mechanical Surface Detection)
- Electronics: DAE4 Sn679; Calibrated: 2016/6/13
- Phantom: SAM_Right; Type: QD000P40CD; Serial: S/N:1801
- Measurement SW: DASY52, Version 52.8 (8); SEMCAD X Version 14.6.10 (7373)

Pin=100mW/Area Scan (71x71x1): Interpolated grid: dx=1.000 mm, dy=1.000 mm
Maximum value of SAR (interpolated) = 19.4 W/kg

Pin=100mW/Zoom Scan (7x7x7)/Cube 0: Measurement grid: dx=4mm, dy=4mm, dz=1.4mm
Reference Value = 68.12 V/m; Power Drift = -0.18 dB
Peak SAR (extrapolated) = 31.2 W/kg
SAR(1 g) = 7.63 W/kg; SAR(10 g) = 2.25 W/kg
Maximum value of SAR (measured) = 18.3 W/kg

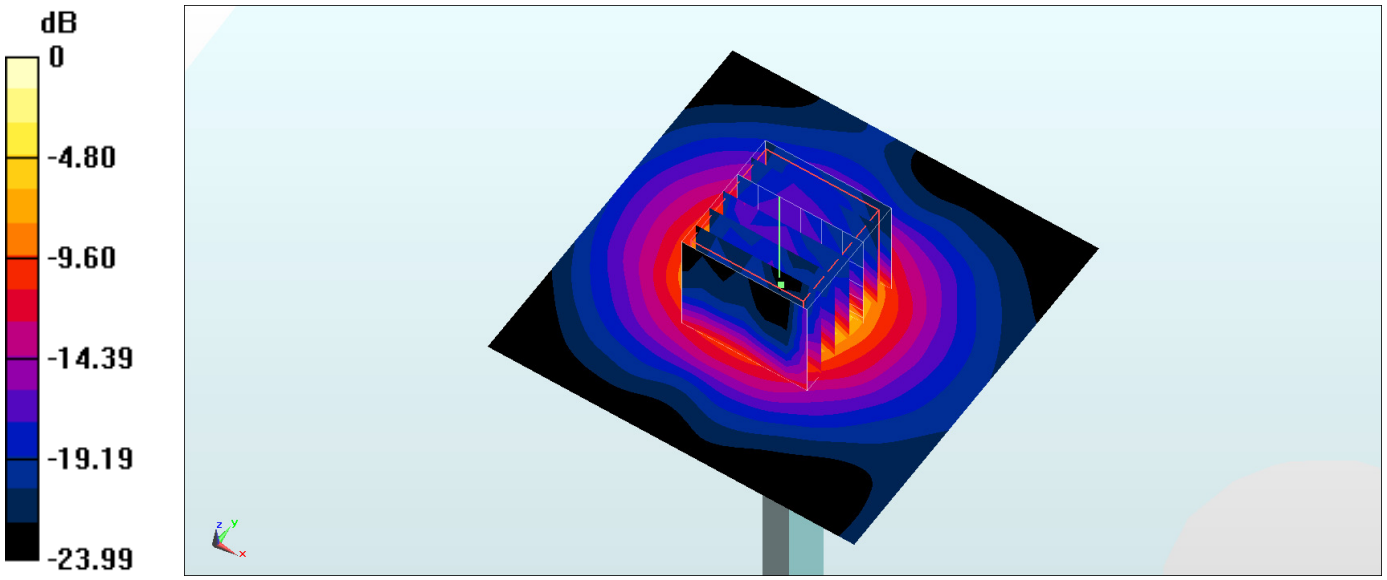

0 dB = 18.3 W/kg = 12.62 dBW/kg

System Check_Body_5800MHz

DUT: D5GHzV2-1040

Communication System: CW; Frequency: 5800 MHz;Duty Cycle: 1:1
Medium: MSL_5G_161026 Medium parameters used: f = 5800 MHz; σ = 6.259 S/m; ε_r = 45.995; ρ = 1000 kg/m^3
Ambient Temperature：23.5 ℃; Liquid Temperature：22.5 ℃

DASY5 Configuration
- Probe: EX3DV4 - SN3820; ConvF(3.7, 3.7, 3.7); Calibrated: 2016/6/27;
- Sensor-Surface: 1.4mm (Mechanical Surface Detection)
- Electronics: DAE4 Sn679; Calibrated: 2016/6/13
- Phantom: SAM_Right; Type: QD000P40CD; Serial: S/N:1801
- Measurement SW: DASY52, Version 52.8 (8); SEMCAD X Version 14.6.10 (7373)

Pin=100mW/Area Scan (71x71x1): Interpolated grid: dx=1.000 mm, dy=1.000 mm
Maximum value of SAR (interpolated) = 16.1 W/kg

Pin=100mW/Zoom Scan (7x7x7)/Cube 0: Measurement grid: dx=4mm, dy=4mm, dz=1.4mm
Reference Value = 61.71 V/m; Power Drift = -0.02 dB
Peak SAR (extrapolated) = 27.7 W/kg
SAR(1 g) = 6.91 W/kg; SAR(10 g) = 2.04 W/kg
Maximum value of SAR (measured) = 17.0 W/kg

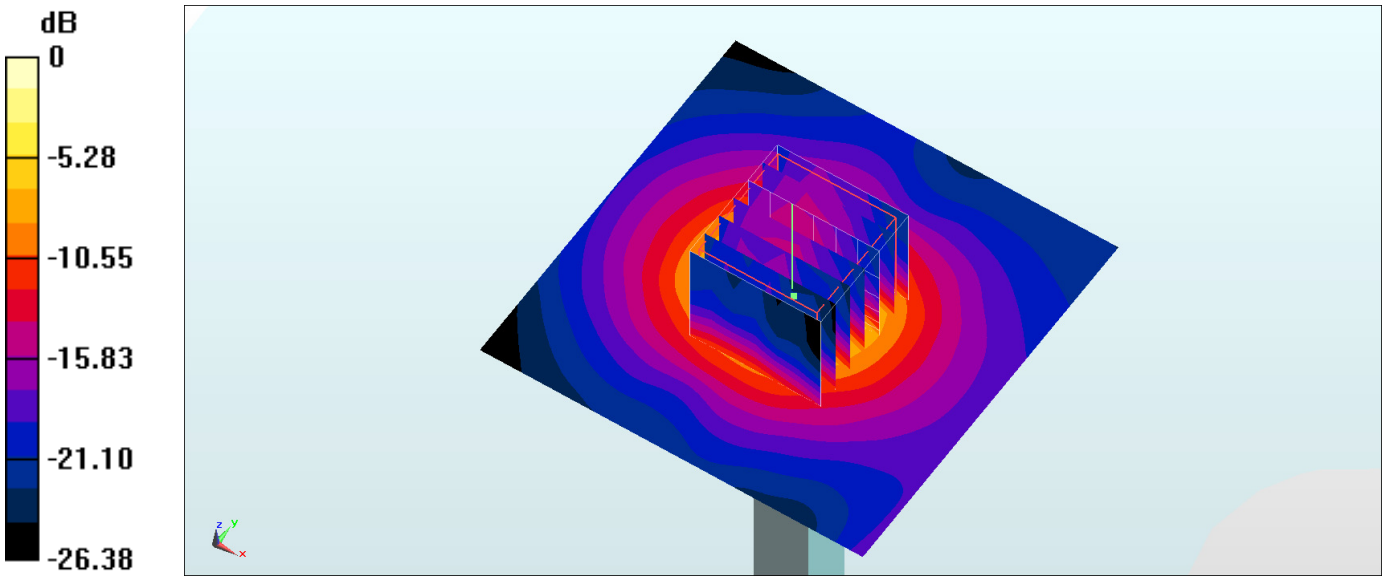

0 dB = 17.0 W/kg = 12.30 dBW/kg

Appendix B. Plots of SAR Measurement

The plots are shown as follows.

#01_GSM850_GPRS (4 Tx slots)_Left Cheek_Ch251

Communication System: GSM850; Frequency: 848.8 MHz;Duty Cycle: 1:2.08
Medium: HSL_850_161020 Medium parameters used: f = 849 MHz; σ = 0.905 S/m; ε_r = 42.998; ρ = 1000 kg/m^3
Ambient Temperature：23.4 ℃; Liquid Temperature：22.4 ℃

DASY5 Configuration
- Probe: EX3DV4 - SN3820; ConvF(9, 9, 9); Calibrated: 2016/6/27;
- Sensor-Surface: 1.4mm (Mechanical Surface Detection)
- Electronics: DAE4 Sn679; Calibrated: 2016/6/13
- Phantom: SAM_Left; Type: QD000P40CD; Serial: S/N:1796
- Measurement SW: DASY52, Version 52.8 (8); SEMCAD X Version 14.6.10 (7373)

Area Scan (61x121x1): Interpolated grid: dx=1.500 mm, dy=1.500 mm
Maximum value of SAR (interpolated) = 0.354 W/kg

Zoom Scan (6x6x7)/Cube 0: Measurement grid: dx=8mm, dy=8mm, dz=5mm
Reference Value = 19.64 V/m; Power Drift = -0.17 dB
Peak SAR (extrapolated) = 0.363 W/kg
SAR(1 g) = 0.280 W/kg; SAR(10 g) = 0.219 W/kg
Maximum value of SAR (measured) = 0.331 W/kg

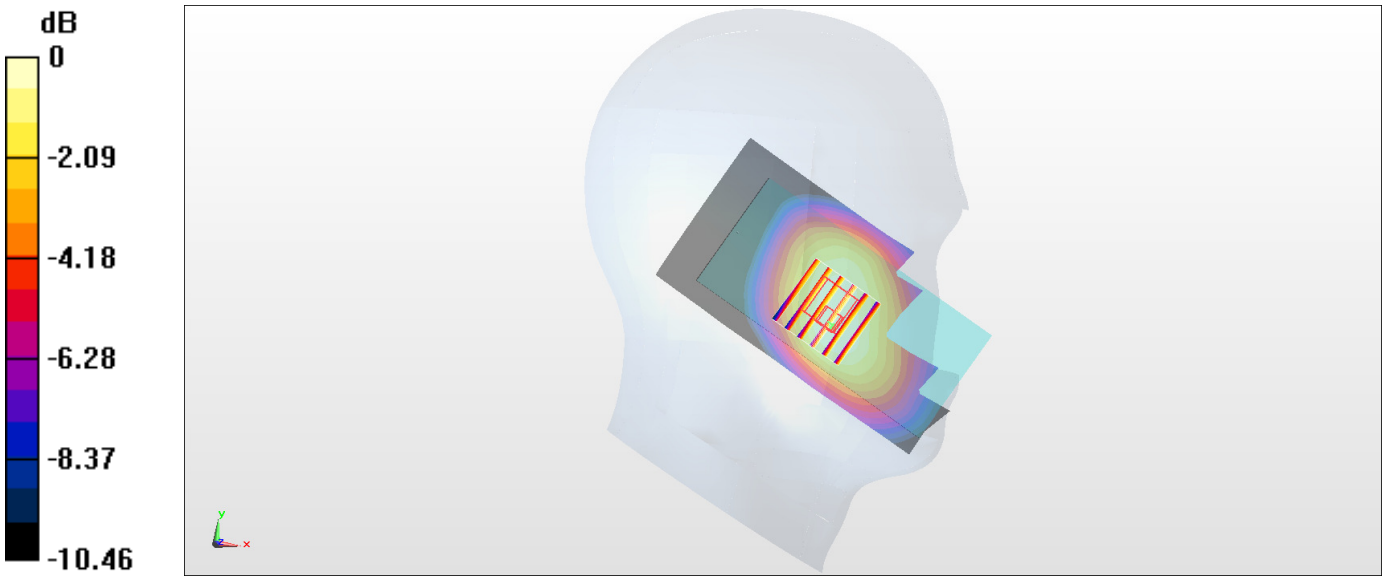

0 dB = 0.331 W/kg = -4.80 dBW/kg

#02_GSM1900_GPRS (3 Tx slots)_Left Cheek_Ch810

Communication System: PCS ; Frequency: 1909.8 MHz;Duty Cycle: 1:2.77
Medium: HSL_1900_161021 Medium parameters used: f = 1910 MHz; σ = 1.427 S/m; ε_r = 41.556; ρ = 1000 kg/m^3
Ambient Temperature：23.6 ℃; Liquid Temperature：22.6 ℃

DASY5 Configuration
- Probe: EX3DV4 - SN3820; ConvF(7.8, 7.8, 7.8); Calibrated: 2016/6/27;
- Sensor-Surface: 1.4mm (Mechanical Surface Detection)
- Electronics: DAE4 Sn679; Calibrated: 2016/6/13
- Phantom: SAM_Left; Type: QD000P40CD; Serial: S/N:1796
- Measurement SW: DASY52, Version 52.8 (8); SEMCAD X Version 14.6.10 (7373)

Area Scan (61x121x1): Interpolated grid: dx=1.500 mm, dy=1.500 mm
Maximum value of SAR (interpolated) = 0.173 W/kg

Zoom Scan (5x5x7)/Cube 0: Measurement grid: dx=8mm, dy=8mm, dz=5mm
Reference Value = 10.16 V/m; Power Drift = -0.11 dB
Peak SAR (extrapolated) = 0.184 W/kg
SAR(1 g) = 0.122 W/kg; SAR(10 g) = 0.082 W/kg
Maximum value of SAR (measured) = 0.159 W/kg

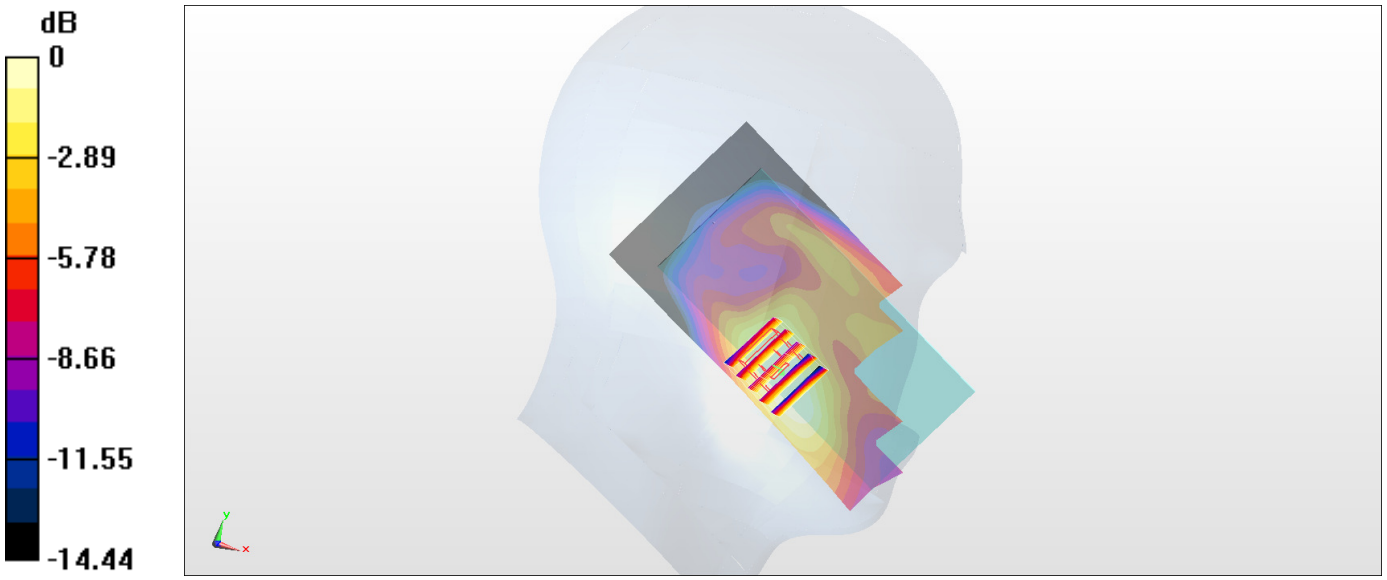

0 dB = 0.159 W/kg = -7.99 dBW/kg

#03_WCDMA II_RMC 12.2Kbps_Left Cheek_Ch9538

Communication System: WCDMA ; Frequency: 1907.6 MHz;Duty Cycle: 1:1
Medium: HSL_1900_161021 Medium parameters used: f = 1908 MHz; σ = 1.425 S/m; ε_r = 41.563; ρ = 1000 kg/m^3
Ambient Temperature：23.6 ℃; Liquid Temperature：22.6 ℃

DASY5 Configuration
- Probe: EX3DV4 - SN3820; ConvF(7.8, 7.8, 7.8); Calibrated: 2016/6/27;
- Sensor-Surface: 1.4mm (Mechanical Surface Detection)
- Electronics: DAE4 Sn679; Calibrated: 2016/6/13
- Phantom: SAM_Left; Type: QD000P40CD; Serial: S/N:1796
- Measurement SW: DASY52, Version 52.8 (8); SEMCAD X Version 14.6.10 (7373)

Area Scan (61x121x1): Interpolated grid: dx=1.500 mm, dy=1.500 mm
Maximum value of SAR (interpolated) = 0.334 W/kg

Zoom Scan (5x5x7)/Cube 0: Measurement grid: dx=8mm, dy=8mm, dz=5mm
Reference Value = 13.78 V/m; Power Drift = -0.01 dB
Peak SAR (extrapolated) = 0.350 W/kg
SAR(1 g) = 0.228 W/kg; SAR(10 g) = 0.151 W/kg
Maximum value of SAR (measured) = 0.300 W/kg

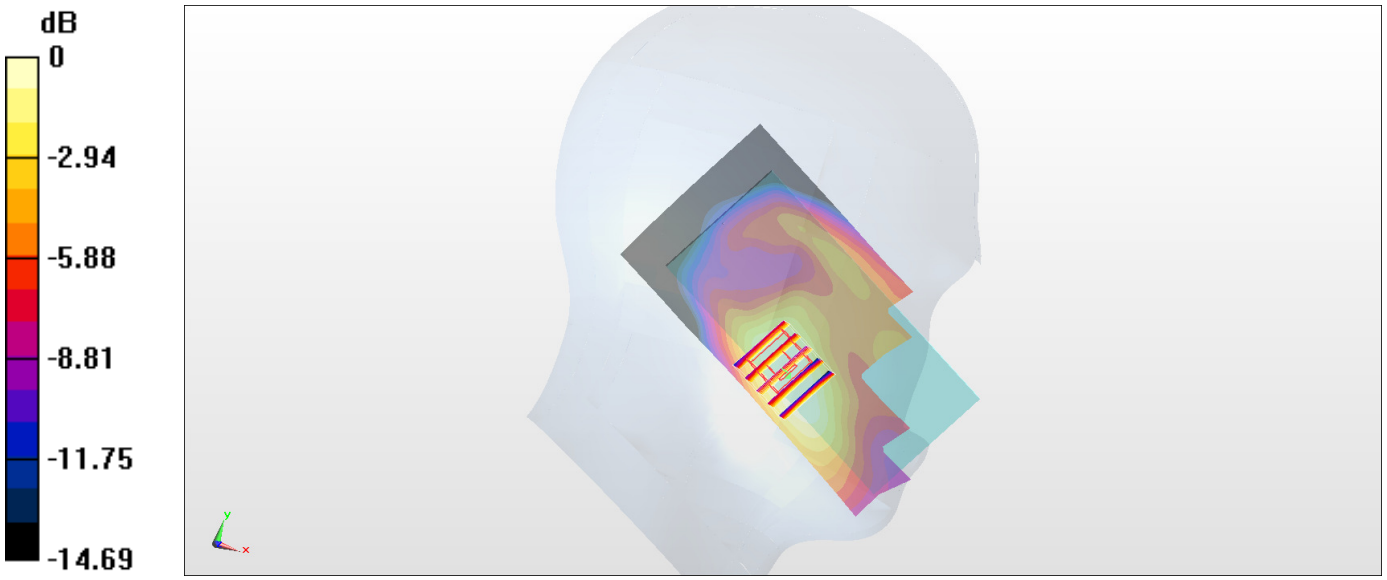

0 dB = 0.300 W/kg = -5.23 dBW/kg

#04_WCDMA V_RMC 12.2Kbps_Left Cheek_Ch4132

Communication System: WCDMA; Frequency: 826.4 MHz;Duty Cycle: 1:1
Medium: HSL_850_161020 Medium parameters used: f = 826.4 MHz; σ = 0.884 S/m; ε_r = 43.291; ρ = 1000 kg/m^3
Ambient Temperature：23.4 ℃; Liquid Temperature：22.4 ℃

DASY5 Configuration
- Probe: EX3DV4 - SN3820; ConvF(9, 9, 9); Calibrated: 2016/6/27;
- Sensor-Surface: 1.4mm (Mechanical Surface Detection)
- Electronics: DAE4 Sn679; Calibrated: 2016/6/13
- Phantom: SAM_Left; Type: QD000P40CD; Serial: S/N:1796
- Measurement SW: DASY52, Version 52.8 (8); SEMCAD X Version 14.6.10 (7373)

Area Scan (61x121x1): Interpolated grid: dx=1.500 mm, dy=1.500 mm
Maximum value of SAR (interpolated) = 0.264 W/kg

Zoom Scan (5x5x7)/Cube 0: Measurement grid: dx=8mm, dy=8mm, dz=5mm
Reference Value = 17.32 V/m; Power Drift = -0.02 dB
Peak SAR (extrapolated) = 0.277 W/kg
SAR(1 g) = 0.214 W/kg; SAR(10 g) = 0.170 W/kg
Maximum value of SAR (measured) = 0.249 W/kg

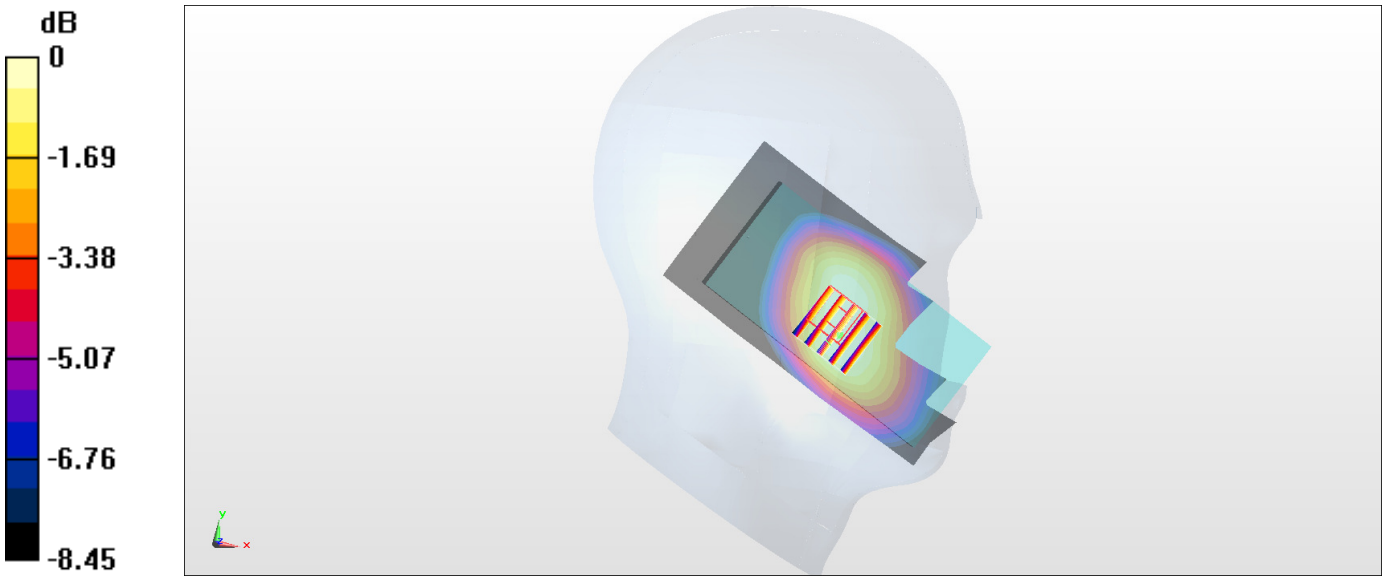

0 dB = 0.249 W/kg = -6.04 dBW/kg

#05_LTE Band 2_20M_QPSK_1_0_Right Cheek_Ch18700

Communication System: LTE ; Frequency: 1860 MHz;Duty Cycle: 1:1
Medium: HSL_1900_161021 Medium parameters used: f = 1860 MHz; σ = 1.377 S/m; ε_r = 41.768; ρ = 1000 kg/m^3
Ambient Temperature：23.6 ℃; Liquid Temperature：22.6 ℃

DASY5 Configuration
- Probe: EX3DV4 - SN3820; ConvF(7.8, 7.8, 7.8); Calibrated: 2016/6/27;
- Sensor-Surface: 1.4mm (Mechanical Surface Detection)
- Electronics: DAE4 Sn679; Calibrated: 2016/6/13
- Phantom: SAM_Left; Type: QD000P40CD; Serial: S/N:1796
- Measurement SW: DASY52, Version 52.8 (8); SEMCAD X Version 14.6.10 (7373)

Area Scan (61x121x1): Interpolated grid: dx=1.500 mm, dy=1.500 mm
Maximum value of SAR (interpolated) = 0.391 W/kg

Zoom Scan (5x5x7)/Cube 0: Measurement grid: dx=8mm, dy=8mm, dz=5mm
Reference Value = 11.76 V/m; Power Drift = -0.12 dB
Peak SAR (extrapolated) = 0.420 W/kg
SAR(1 g) = 0.276 W/kg; SAR(10 g) = 0.181 W/kg
Maximum value of SAR (measured) = 0.368 W/kg

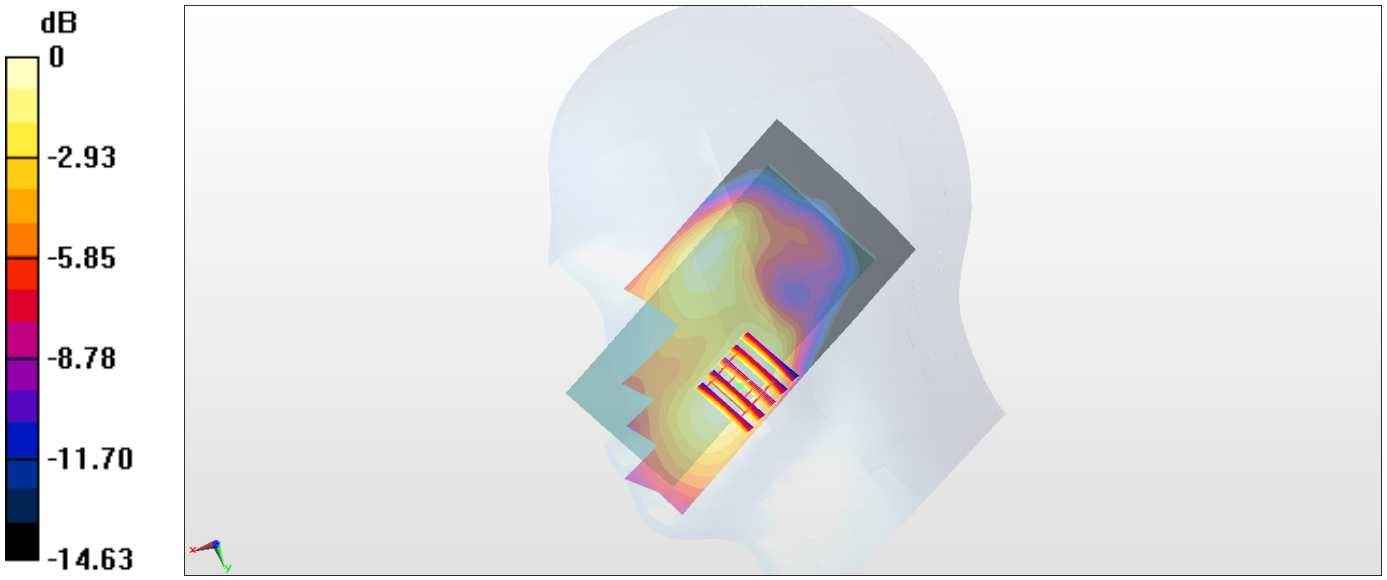

0 dB = 0.368 W/kg = -4.34 dBW/kg

#06_LTE Band 5_10M_QPSK_1_0_Left Cheek_Ch20525

Communication System: LTE; Frequency: 836.5 MHz;Duty Cycle: 1:1
Medium: HSL_850_161020 Medium parameters used: f = 836.5 MHz; σ = 0.893 S/m; ε_r = 43.157; ρ = 1000 kg/m^3
Ambient Temperature：23.4 ℃; Liquid Temperature：22.4 ℃

DASY5 Configuration
- Probe: EX3DV4 - SN3820; ConvF(9, 9, 9); Calibrated: 2016/6/27;
- Sensor-Surface: 1.4mm (Mechanical Surface Detection)
- Electronics: DAE4 Sn679; Calibrated: 2016/6/13
- Phantom: SAM_Left; Type: QD000P40CD; Serial: S/N:1796
- Measurement SW: DASY52, Version 52.8 (8); SEMCAD X Version 14.6.10 (7373)

Area Scan (61x121x1): Interpolated grid: dx=1.500 mm, dy=1.500 mm
Maximum value of SAR (interpolated) = 0.253 W/kg

Zoom Scan (6x6x7)/Cube 0: Measurement grid: dx=8mm, dy=8mm, dz=5mm
Reference Value = 16.66 V/m; Power Drift = -0.08 dB
Peak SAR (extrapolated) = 0.258 W/kg
SAR(1 g) = 0.199 W/kg; SAR(10 g) = 0.159 W/kg
Maximum value of SAR (measured) = 0.232 W/kg

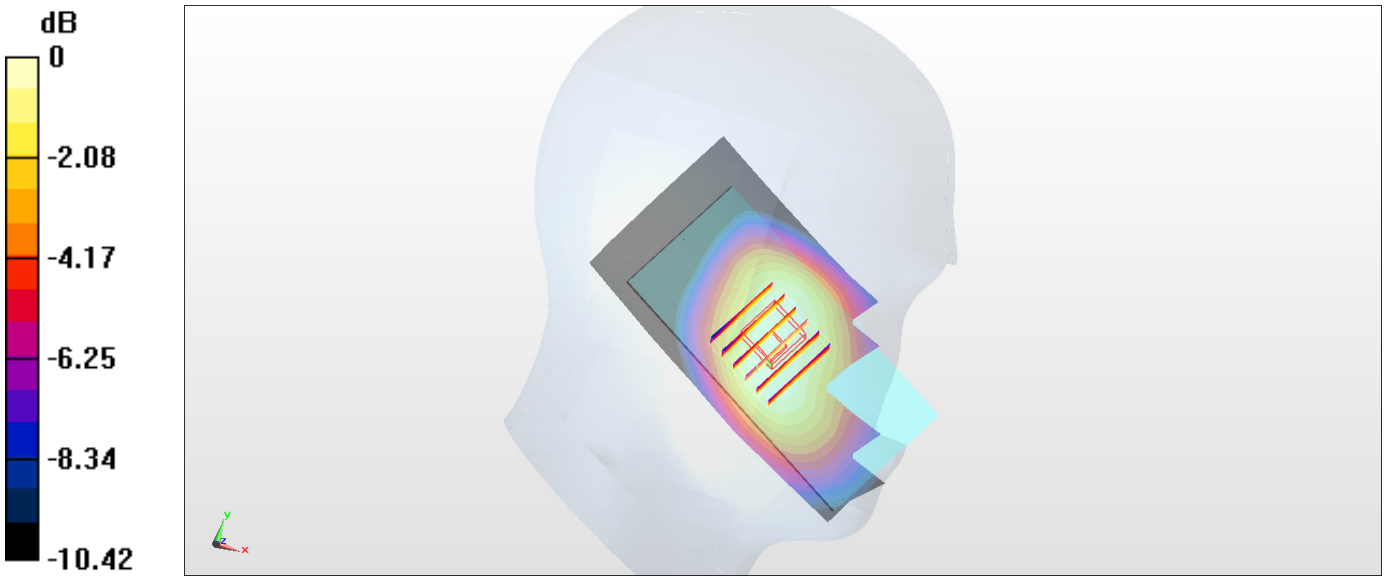

0 dB = 0.232 W/kg = -6.35 dBW/kg

#07_LTE Band 7_20M_QPSK_1_0_Right Cheek_Ch20850

Communication System: LTE; Frequency: 2510 MHz;Duty Cycle: 1:1
Medium: HSL_2600_161021 Medium parameters used: f = 2510 MHz; σ = 1.819 S/m; ε_r = 38.848; ρ = 1000 kg/m^3
Ambient Temperature：23.2 ℃; Liquid Temperature：22.2 ℃

DASY5 Configuration
- Probe: EX3DV4 - SN3820; ConvF(6.49, 6.49, 6.49); Calibrated: 2016/6/27;
- Sensor-Surface: 1.4mm (Mechanical Surface Detection)
- Electronics: DAE4 Sn679; Calibrated: 2016/6/13
- Phantom: SAM_Right; Type: QD000P40CD; Serial: S/N:1801
- Measurement SW: DASY52, Version 52.8 (8); SEMCAD X Version 14.6.10 (7373)

Area Scan (71x141x1): Interpolated grid: dx=1.200 mm, dy=1.200 mm
Maximum value of SAR (interpolated) = 0.444 W/kg

Zoom Scan (7x7x7)/Cube 0: Measurement grid: dx=5mm, dy=5mm, dz=5mm
Reference Value = 13.50 V/m; Power Drift = 0.19 dB
Peak SAR (extrapolated) = 0.455 W/kg
SAR(1 g) = 0.251 W/kg; SAR(10 g) = 0.135 W/kg
Maximum value of SAR (measured) = 0.382 W/kg

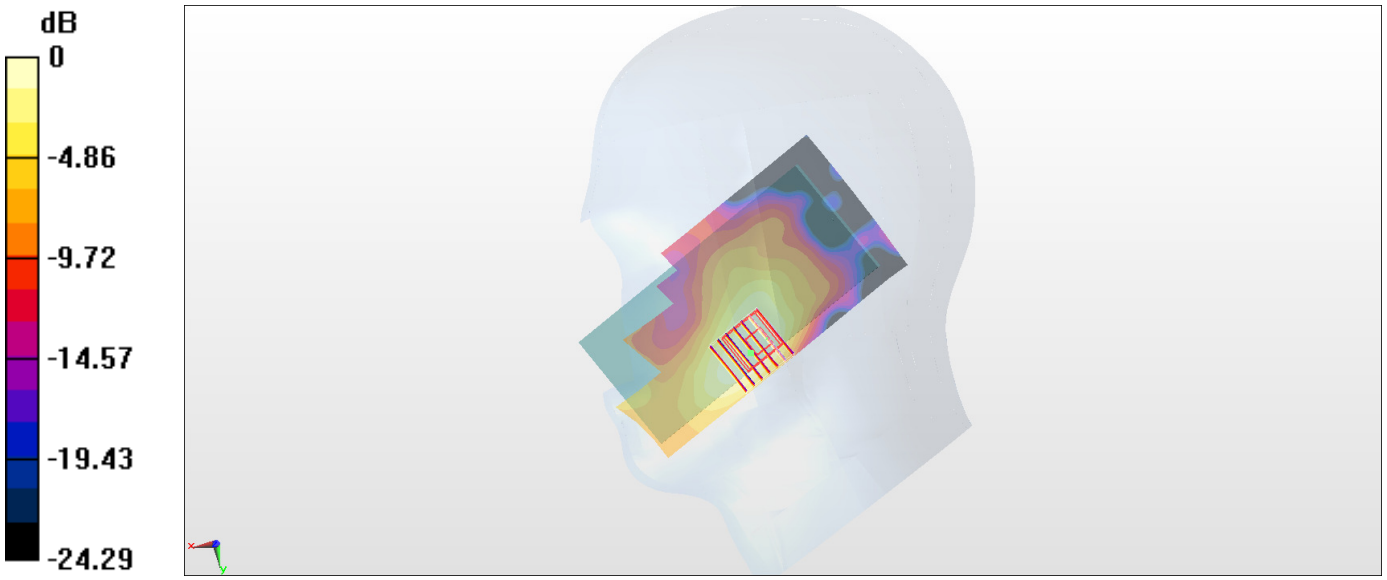

0 dB = 0.382 W/kg = -4.18 dBW/kg

#08_WLAN2.4GHz_802.11b 1Mbps_Left Cheek_Ch1

Communication System: 802.11b ; Frequency: 2412 MHz;Duty Cycle: 1:1
Medium: HSL_2450_161103 Medium parameters used: f = 2412 MHz; σ = 1.755 S/m; ε_r = 40.007; ρ = 1000 kg/m^3
Ambient Temperature：23.5 ℃; Liquid Temperature：22.5 ℃

DASY5 Configuration
- Probe: EX3DV4 - SN3931; ConvF(7.6, 7.6, 7.6); Calibrated: 2016/10/3;
- Sensor-Surface: 1.4mm (Mechanical Surface Detection)
- Electronics: DAE3 Sn577; Calibrated: 2016/9/28
- Phantom: SAM_Right; Type: QD000P40CD; Serial: S/N:1801
- Measurement SW: DASY52, Version 52.8 (8); SEMCAD X Version 14.6.10 (7373)

Area Scan (71x81x1): Interpolated grid: dx=1.200 mm, dy=1.200 mm
Maximum value of SAR (interpolated) = 1.99 W/kg

Zoom Scan (7x7x7)/Cube 0: Measurement grid: dx=5mm, dy=5mm, dz=5mm
Reference Value = 28.43 V/m; Power Drift = 0.00 dB
Peak SAR (extrapolated) = 2.99 W/kg
SAR(1 g) = 1.24 W/kg; SAR(10 g) = 0.526 W/kg
Maximum value of SAR (measured) = 2.23 W/kg

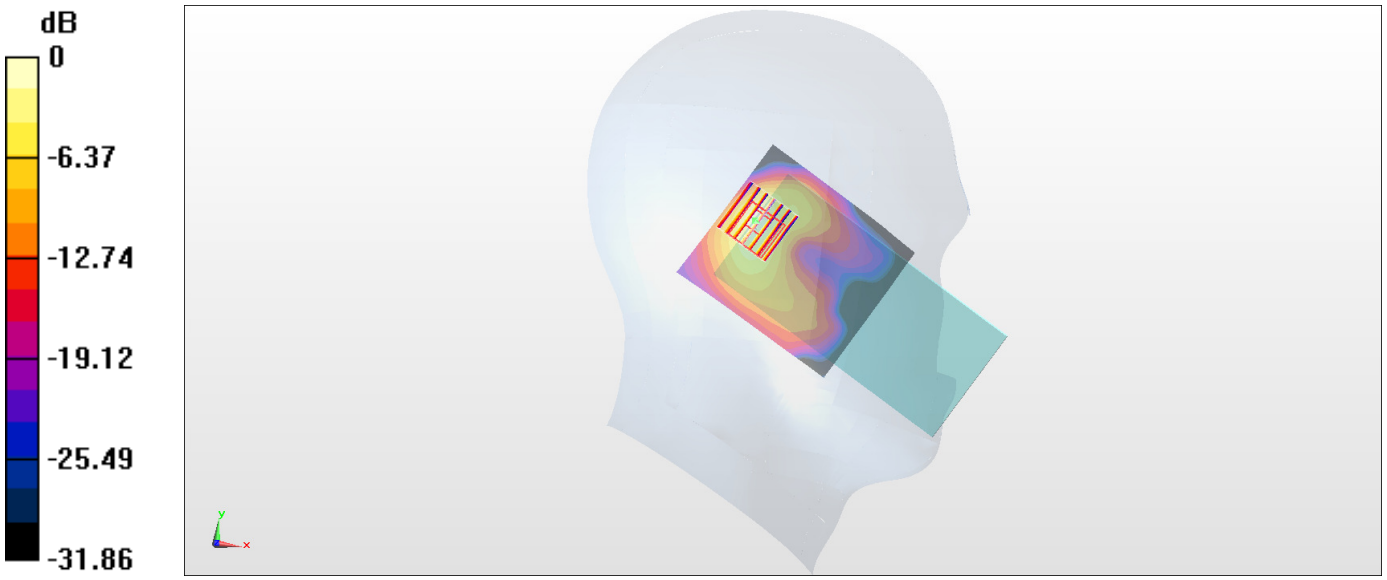

0 dB = 2.23 W/kg = 3.48 dBW/kg

#09_WLAN5GHz_802.11a 6Mbps_Left Cheek_Ch52

Communication System: 802.11a; Frequency: 5260 MHz;Duty Cycle: 1:1.036
Medium: HSL_5G_161024 Medium parameters used: f = 5260 MHz; σ = 4.667 S/m; ε_r = 37.313; ρ = 1000 kg/m^3
Ambient Temperature：23.5 ℃; Liquid Temperature：22.5 ℃

DASY5 Configuration
- Probe: EX3DV4 - SN3820; ConvF(4.41, 4.41, 4.41); Calibrated: 2016/6/27;
- Sensor-Surface: 1.4mm (Mechanical Surface Detection)
- Electronics: DAE4 Sn679; Calibrated: 2016/6/13
- Phantom: SAM_Right; Type: QD000P40CD; Serial: S/N:1801
- Measurement SW: DASY52, Version 52.8 (8); SEMCAD X Version 14.6.10 (7373)

Area Scan (81x181x1): Interpolated grid: dx=1.000 mm, dy=1.000 mm
Maximum value of SAR (interpolated) = 3.34 W/kg

Zoom Scan (10x9x7)/Cube 0: Measurement grid: dx=4mm, dy=4mm, dz=1.4mm
Reference Value = 19.68 V/m; Power Drift = -0.15 dB
Peak SAR (extrapolated) = 6.43 W/kg
SAR(1 g) = 1.12 W/kg; SAR(10 g) = 0.333 W/kg
Maximum value of SAR (measured) = 2.70 W/kg

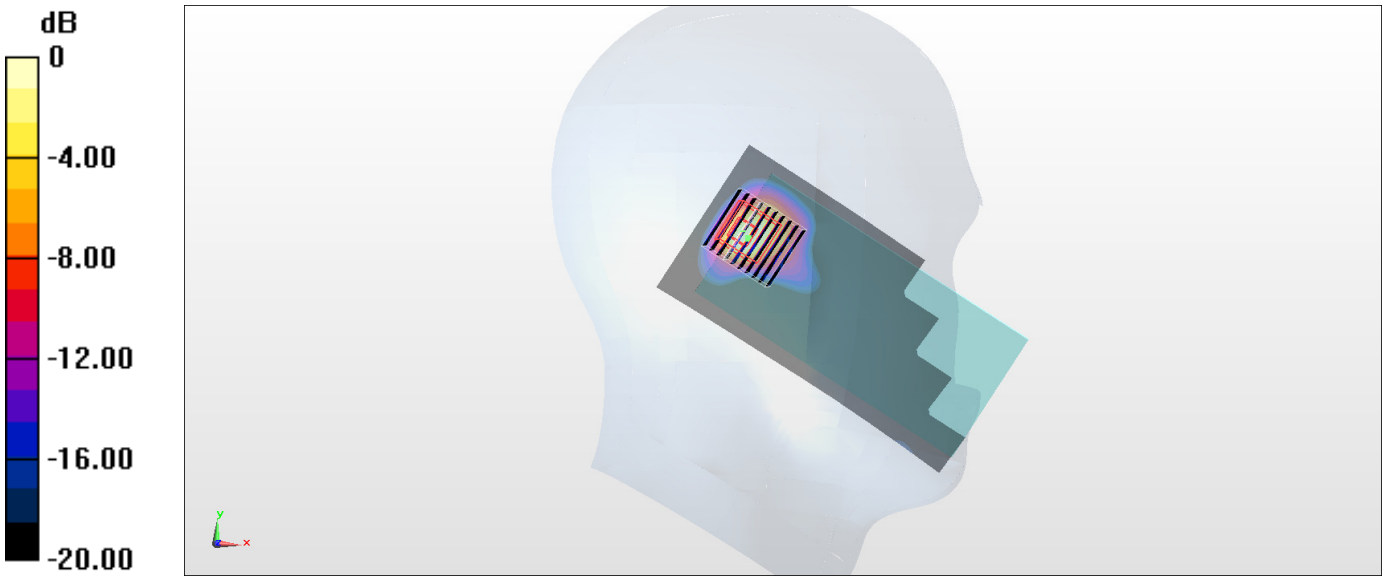

0 dB = 2.70 W/kg = 4.31 dBW/kg

#10_WLAN5GHz_802.11a 6Mbps_Left Cheek_Ch132

Communication System: 802.11a; Frequency: 5660 MHz;Duty Cycle: 1:1.036
Medium: HSL_5G_161024 Medium parameters used: f = 5660 MHz; σ = 5.084 S/m; ε_r = 36.777; ρ = 1000 kg/m^3
Ambient Temperature：23.5 ℃; Liquid Temperature：22.5 ℃

DASY5 Configuration
- Probe: EX3DV4 - SN3820; ConvF(4.14, 4.14, 4.14); Calibrated: 2016/6/27;
- Sensor-Surface: 1.4mm (Mechanical Surface Detection)
- Electronics: DAE4 Sn679; Calibrated: 2016/6/13
- Phantom: SAM_Right; Type: QD000P40CD; Serial: S/N:1801
- Measurement SW: DASY52, Version 52.8 (8); SEMCAD X Version 14.6.10 (7373)

Area Scan (81x181x1): Interpolated grid: dx=1.000 mm, dy=1.000 mm
Maximum value of SAR (interpolated) = 1.18 W/kg

Zoom Scan (9x9x7)/Cube 0: Measurement grid: dx=4mm, dy=4mm, dz=1.4mm
Reference Value = 17.00 V/m; Power Drift = -0.00 dB
Peak SAR (extrapolated) = 3.24 W/kg
SAR(1 g) = 0.771 W/kg; SAR(10 g) = 0.253 W/kg
Maximum value of SAR (measured) = 1.89 W/kg

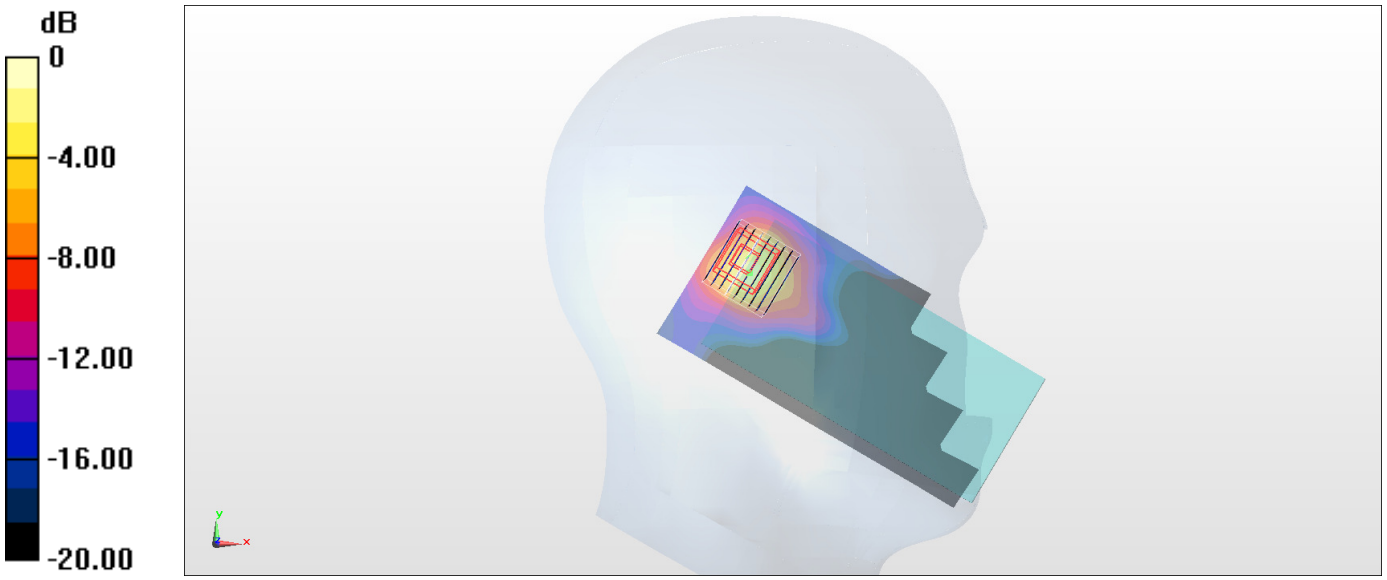

0 dB = 1.89 W/kg = 2.76 dBW/kg

#11_WLAN5GHz_802.11a 6Mbps_Left Cheek_Ch149

Communication System: 802.11a ; Frequency: 5745 MHz;Duty Cycle: 1:1.036
Medium: HSL_5G_161024 Medium parameters used: f = 5745 MHz; σ = 5.172 S/m; ε_r = 36.666; ρ = 1000 kg/m^3
Ambient Temperature：23.5 ℃; Liquid Temperature：22.5 ℃

DASY5 Configuration
- Probe: EX3DV4 - SN3820; ConvF(4.14, 4.14, 4.14); Calibrated: 2016/6/27;
- Sensor-Surface: 1.4mm (Mechanical Surface Detection)
- Electronics: DAE4 Sn679; Calibrated: 2016/6/13
- Phantom: SAM_Right; Type: QD000P40CD; Serial: S/N:1801
- Measurement SW: DASY52, Version 52.8 (8); SEMCAD X Version 14.6.10 (7373)

Area Scan (81x181x1): Interpolated grid: dx=1.000 mm, dy=1.000 mm
Maximum value of SAR (interpolated) = 0.925 W/kg

Zoom Scan (9x9x7)/Cube 0: Measurement grid: dx=4mm, dy=4mm, dz=1.4mm
Reference Value = 17.57 V/m; Power Drift = -0.17 dB
Peak SAR (extrapolated) = 3.07 W/kg
SAR(1 g) = 0.705 W/kg; SAR(10 g) = 0.242 W/kg
Maximum value of SAR (measured) = 1.76 W/kg

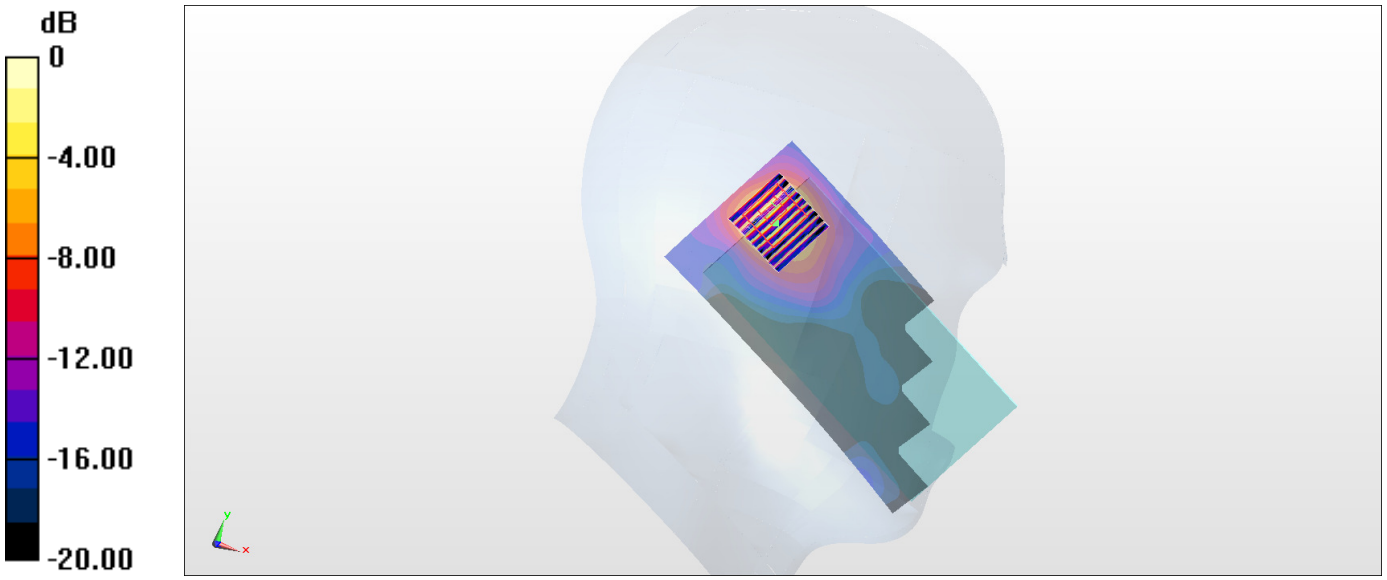

0 dB = 1.76 W/kg = 2.46 dBW/kg

#12_GSM850_GPRS (4 Tx slots)_Left Side_10mm_Ch251

Communication System: GSM850; Frequency: 848.8 MHz;Duty Cycle: 1:2.08
Medium: MSL_850_161020 Medium parameters used: f = 849 MHz; σ = 0.993 S/m; ε_r = 56.334; ρ = 1000 kg/m^3
Ambient Temperature：23.8 ℃; Liquid Temperature：22.8 ℃

DASY5 Configuration
- Probe: EX3DV4 - SN3820; ConvF(8.86, 8.86, 8.86); Calibrated: 2016/6/27;
- Sensor-Surface: 1.4mm (Mechanical Surface Detection)
- Electronics: DAE4 Sn679; Calibrated: 2016/6/13
- Phantom: SAM_Left; Type: QD000P40CD; Serial: S/N:1796
- Measurement SW: DASY52, Version 52.8 (8); SEMCAD X Version 14.6.10 (7373)

Area Scan (41x121x1): Interpolated grid: dx=1.500 mm, dy=1.500 mm
Maximum value of SAR (interpolated) = 0.652 W/kg

Zoom Scan (5x5x7)/Cube 0: Measurement grid: dx=8mm, dy=8mm, dz=5mm
Reference Value = 26.15 V/m; Power Drift = -0.03 dB
Peak SAR (extrapolated) = 0.718 W/kg
SAR(1 g) = 0.504 W/kg; SAR(10 g) = 0.357 W/kg
Maximum value of SAR (measured) = 0.645 W/kg

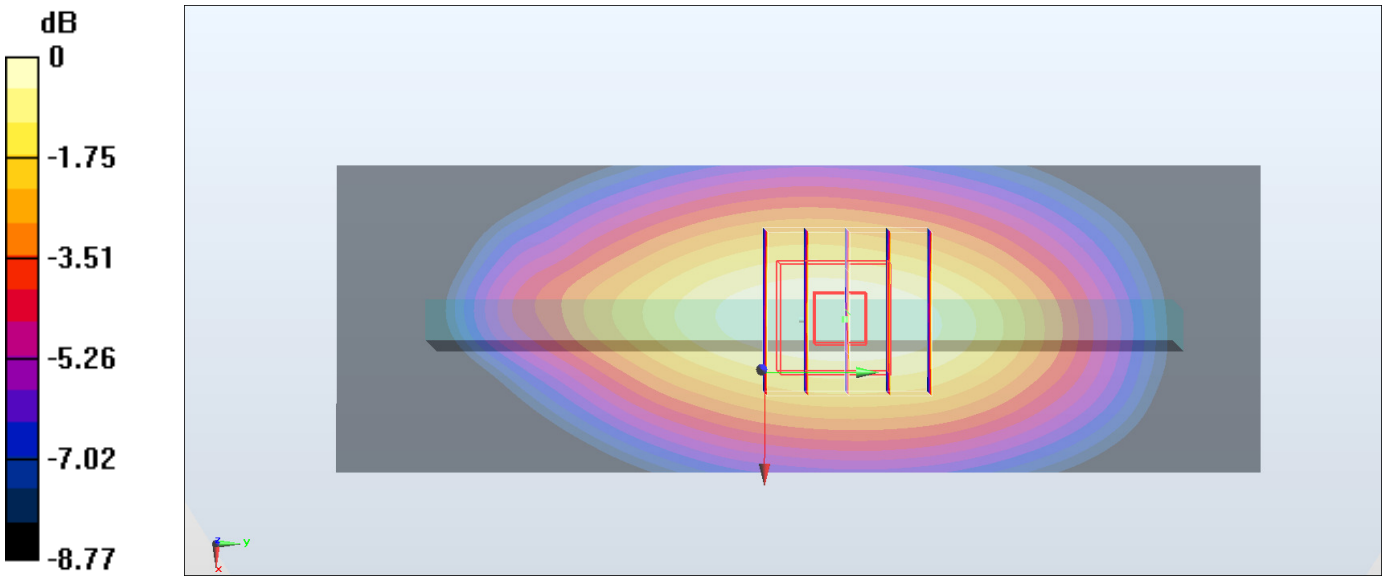

0 dB = 0.645 W/kg = -1.90 dBW/kg

#13_GSM1900_GPRS (3 Tx slots)_Bottom Side_10mm_Ch512

Communication System: PCS; Frequency: 1850.2 MHz;Duty Cycle: 1:2.77
Medium: MSL_1900_161019 Medium parameters used : f = 1850.2 MHz; σ = 1.464 S/m; ε_r = 54.856; ρ = 1000 kg/m^3
Ambient Temperature：23.2 ℃; Liquid Temperature：22.2 ℃

DASY5 Configuration
- Probe: EX3DV4 - SN3820; ConvF(7.41, 7.41, 7.41); Calibrated: 2016/6/27;
- Sensor-Surface: 1.4mm (Mechanical Surface Detection)
- Electronics: DAE4 Sn679; Calibrated: 2016/6/13
- Phantom: SAM_Left; Type: QD000P40CD; Serial: S/N:1796
- Measurement SW: DASY52, Version 52.8 (8); SEMCAD X Version 14.6.10 (7373)

Area Scan (41x61x1): Interpolated grid: dx=1.500 mm, dy=1.500 mm
Maximum value of SAR (interpolated) = 1.24 W/kg

Zoom Scan (5x5x7)/Cube 0: Measurement grid: dx=8mm, dy=8mm, dz=5mm
Reference Value = 29.25 V/m; Power Drift = -0.06 dB
Peak SAR (extrapolated) = 1.40 W/kg
SAR(1 g) = 0.803 W/kg; SAR(10 g) = 0.438 W/kg
Maximum value of SAR (measured) = 1.17 W/kg

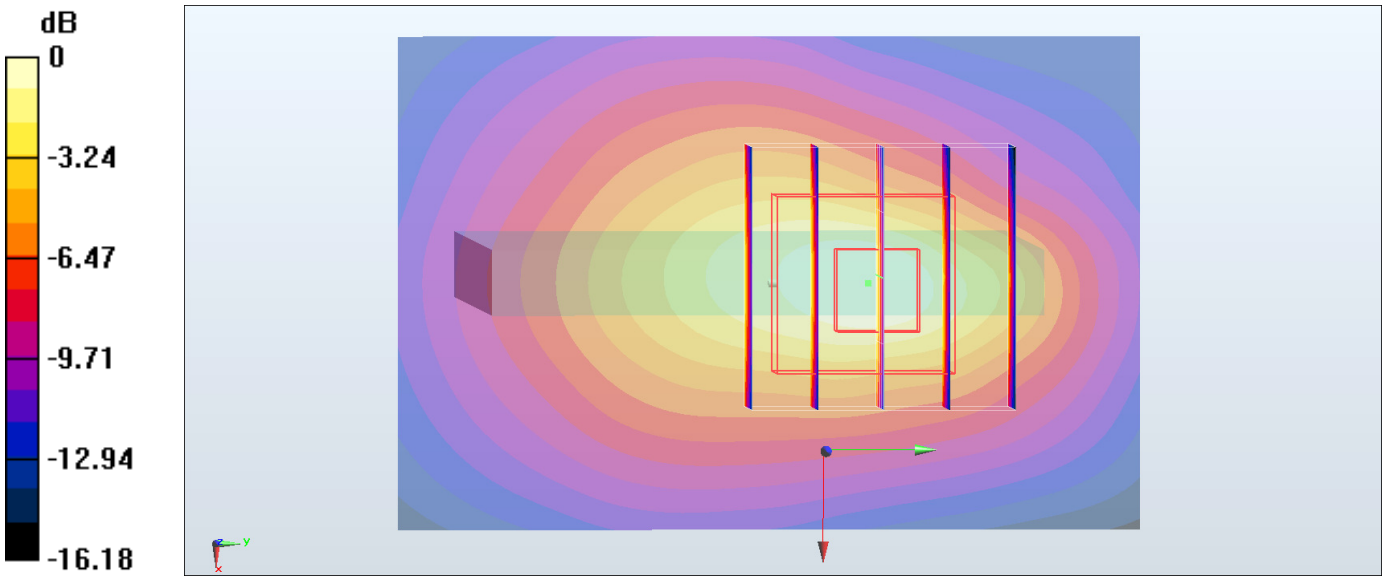

0 dB = 1.17 W/kg = 0.68 dBW/kg

#14_WCDMA II_RMC 12.2Kbps_Bottom Side_10mm_Ch9262

Communication System: WCDMA; Frequency: 1852.4 MHz;Duty Cycle: 1:1
Medium: MSL_1900_161017 Medium parameters used: f = 1852.4 MHz; σ = 1.511 S/m; ε_r = 55.514; ρ = 1000 kg/m^3
Ambient Temperature：23.3 ℃; Liquid Temperature：22.3 ℃

DASY5 Configuration
- Probe: EX3DV4 - SN3820; ConvF(7.41, 7.41, 7.41); Calibrated: 2016/6/27;
- Sensor-Surface: 1.4mm (Mechanical Surface Detection)
- Electronics: DAE4 Sn679; Calibrated: 2016/6/13
- Phantom: SAM_Right; Type: QD000P40CD; Serial: S/N:1801
- Measurement SW: DASY52, Version 52.8 (8); SEMCAD X Version 14.6.10 (7373)

Area Scan (41x61x1): Interpolated grid: dx=1.500 mm, dy=1.500 mm
Maximum value of SAR (interpolated) = 1.68 W/kg

Zoom Scan (5x5x7)/Cube 0: Measurement grid: dx=8mm, dy=8mm, dz=5mm
Reference Value = 32.91 V/m; Power Drift = -0.18 dB
Peak SAR (extrapolated) = 1.90 W/kg
SAR(1 g) = 1.08 W/kg; SAR(10 g) = 0.587 W/kg
Maximum value of SAR (measured) = 1.62 W/kg

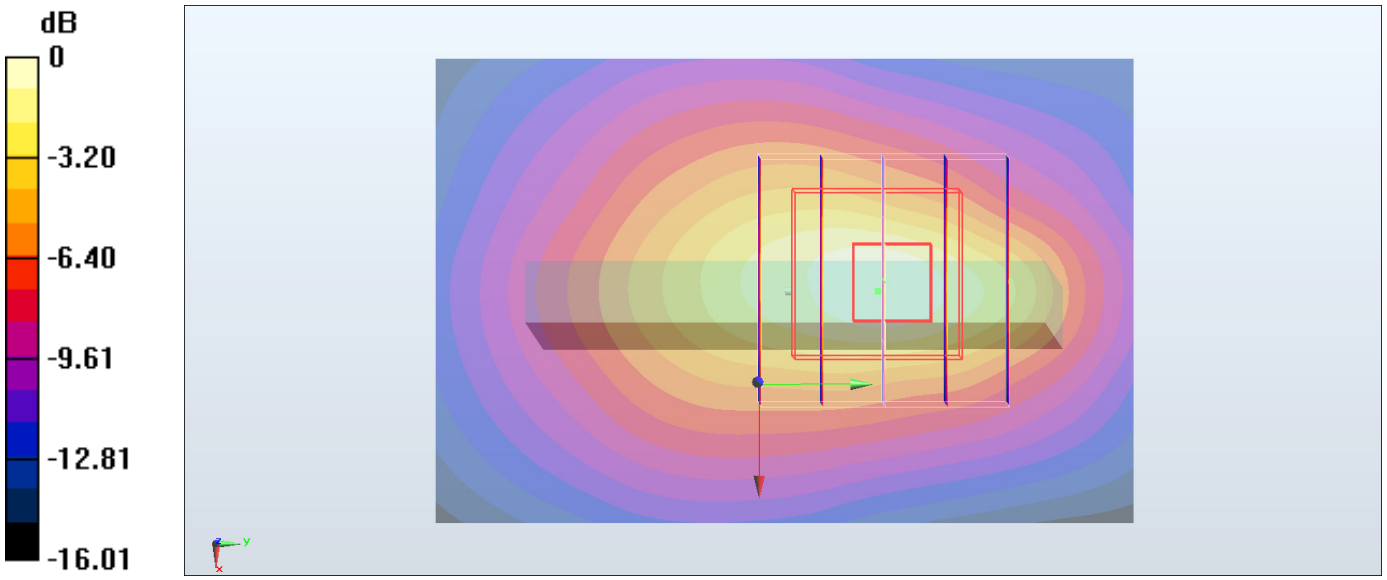

0 dB = 1.62 W/kg = 2.10 dBW/kg

#15_WCDMA V_RMC 12.2Kbps_Left Side_10mm_Ch4132

Communication System: WCDMA ; Frequency: 826.4 MHz;Duty Cycle: 1:1
Medium: MSL_850_161020 Medium parameters used: f = 826.4 MHz; σ = 0.972 S/m; ε_r = 56.559; ρ = 1000 kg/m^3
Ambient Temperature：23.8 ℃; Liquid Temperature：22.8 ℃

DASY5 Configuration
- Probe: EX3DV4 - SN3820; ConvF(8.86, 8.86, 8.86); Calibrated: 2016/6/27;
- Sensor-Surface: 1.4mm (Mechanical Surface Detection)
- Electronics: DAE4 Sn679; Calibrated: 2016/6/13
- Phantom: SAM_Left; Type: QD000P40CD; Serial: S/N:1796
- Measurement SW: DASY52, Version 52.8 (8); SEMCAD X Version 14.6.10 (7373)

Area Scan (41x121x1): Interpolated grid: dx=1.500 mm, dy=1.500 mm
Maximum value of SAR (interpolated) = 0.538 W/kg

Zoom Scan (5x5x7)/Cube 0: Measurement grid: dx=8mm, dy=8mm, dz=5mm
Reference Value = 24.07 V/m; Power Drift = -0.14 dB
Peak SAR (extrapolated) = 0.595 W/kg
SAR(1 g) = 0.414 W/kg; SAR(10 g) = 0.296 W/kg
Maximum value of SAR (measured) = 0.529 W/kg

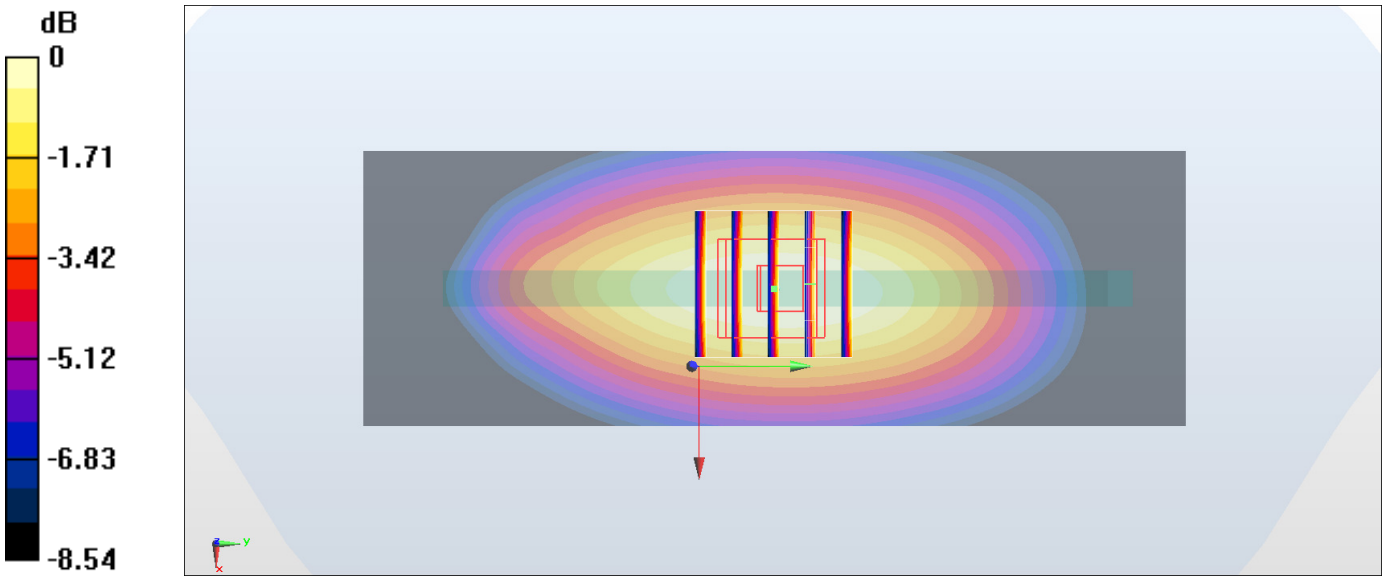

0 dB = 0.529 W/kg = -2.77 dBW/kg

#16_LTE Band 2_20M_QPSK_1_0_Bottom Side_10mm_Ch18700

Communication System: LTE; Frequency: 1860 MHz;Duty Cycle: 1:1
Medium: MSL_1900_161017 Medium parameters used: f = 1860 MHz; σ = 1.515 S/m; ε_r = 55.502; ρ = 1000 kg/m^3
Ambient Temperature：23.3 ℃; Liquid Temperature：22.3 ℃

DASY5 Configuration
- Probe: EX3DV4 - SN3820; ConvF(7.41, 7.41, 7.41); Calibrated: 2016/6/27;
- Sensor-Surface: 1.4mm (Mechanical Surface Detection)
- Electronics: DAE4 Sn679; Calibrated: 2016/6/13
- Phantom: SAM_Right; Type: QD000P40CD; Serial: S/N:1801
- Measurement SW: DASY52, Version 52.8 (8); SEMCAD X Version 14.6.10 (7373)

Area Scan (41x61x1): Interpolated grid: dx=1.500 mm, dy=1.500 mm
Maximum value of SAR (interpolated) = 1.96 W/kg

Zoom Scan (5x5x7)/Cube 0: Measurement grid: dx=8mm, dy=8mm, dz=5mm
Reference Value = 36.67 V/m; Power Drift = -0.10 dB
Peak SAR (extrapolated) = 2.23 W/kg
SAR(1 g) = 1.27 W/kg; SAR(10 g) = 0.691 W/kg
Maximum value of SAR (measured) = 1.92 W/kg

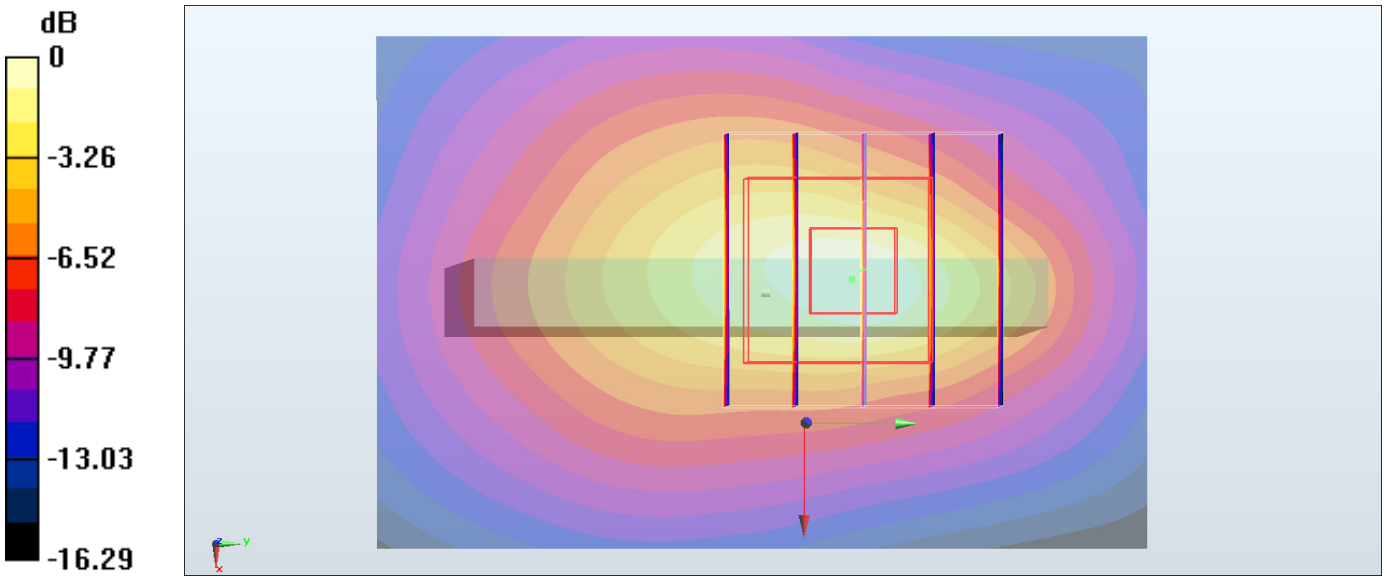

0 dB = 1.92 W/kg = 2.83 dBW/kg

#17_LTE Band 5_10M_QPSK_1_0_Left Side_10mm_Ch20525

Communication System: LTE; Frequency: 836.5 MHz;Duty Cycle: 1:1
Medium: MSL_850_161020 Medium parameters used: f = 836.5 MHz; σ = 0.981 S/m; ε_r = 56.459; ρ = 1000 kg/m^3
Ambient Temperature：23.8 ℃; Liquid Temperature：22.8 ℃

DASY5 Configuration
- Probe: EX3DV4 - SN3820; ConvF(8.86, 8.86, 8.86); Calibrated: 2016/6/27;
- Sensor-Surface: 1.4mm (Mechanical Surface Detection)
- Electronics: DAE4 Sn679; Calibrated: 2016/6/13
- Phantom: SAM_Left; Type: QD000P40CD; Serial: S/N:1796
- Measurement SW: DASY52, Version 52.8 (8); SEMCAD X Version 14.6.10 (7373)

Area Scan (41x121x1): Interpolated grid: dx=1.500 mm, dy=1.500 mm
Maximum value of SAR (interpolated) = 0.573 W/kg

Zoom Scan (5x5x7)/Cube 0: Measurement grid: dx=8mm, dy=8mm, dz=5mm
Reference Value = 24.54 V/m; Power Drift = -0.05 dB
Peak SAR (extrapolated) = 0.642 W/kg
SAR(1 g) = 0.446 W/kg; SAR(10 g) = 0.317 W/kg
Maximum value of SAR (measured) = 0.572 W/kg

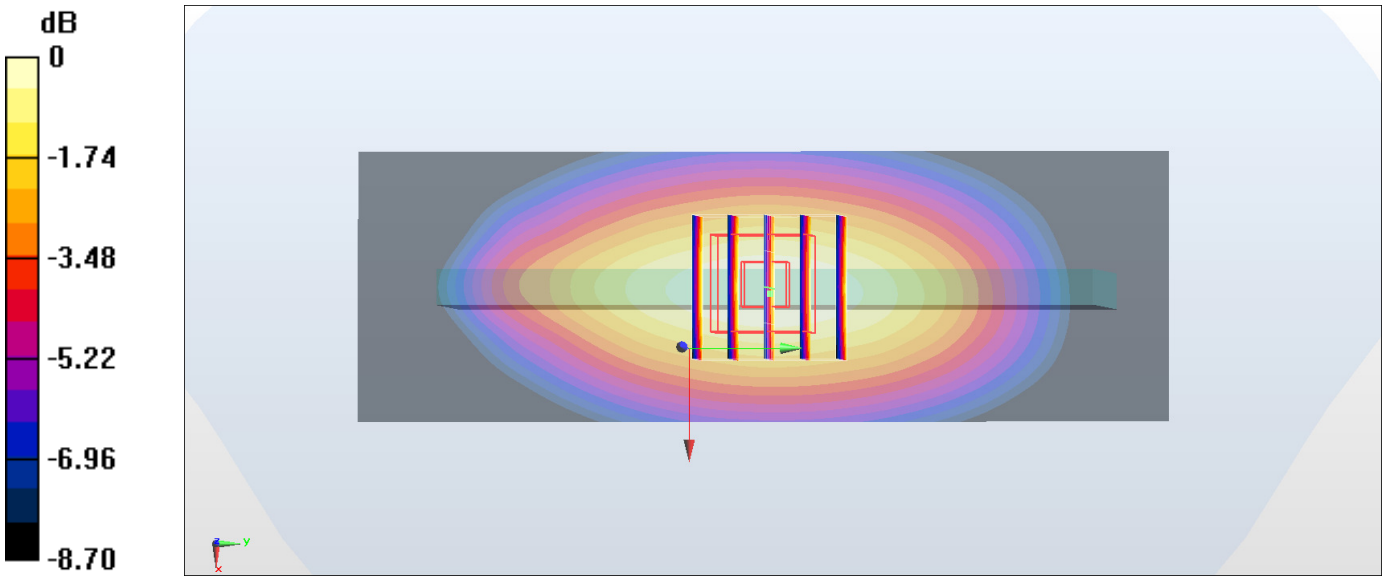

0 dB = 0.572 W/kg = -2.43 dBW/kg

#18_LTE Band 7_20M_QPSK_50_0_Bottom Side_10mm_Ch21350

Communication System: LTE ; Frequency: 2560 MHz;Duty Cycle: 1:1
Medium: MSL_2600_161018 Medium parameters used: f = 2560 MHz; σ = 2.098 S/m; ε_r = 52.867; ρ = 1000 kg/m^3
Ambient Temperature：23.6 ℃; Liquid Temperature：22.6 ℃

DASY5 Configuration
- Probe: EX3DV4 - SN3820; ConvF(6.52, 6.52, 6.52); Calibrated: 2016/6/27;
- Sensor-Surface: 1.4mm (Mechanical Surface Detection)
- Electronics: DAE4 Sn679; Calibrated: 2016/6/13
- Phantom: SAM_Left; Type: QD000P40CD; Serial: S/N:1796
- Measurement SW: DASY52, Version 52.8 (8); SEMCAD X Version 14.6.10 (7373)

Area Scan (51x71x1): Interpolated grid: dx=1.200 mm, dy=1.200 mm
Maximum value of SAR (interpolated) = 1.86 W/kg

Zoom Scan (7x7x7)/Cube 0: Measurement grid: dx=5mm, dy=5mm, dz=5mm
Reference Value = 22.93 V/m; Power Drift = -0.16 dB
Peak SAR (extrapolated) = 2.13 W/kg
SAR(1 g) = 1.14 W/kg; SAR(10 g) = 0.572 W/kg
Maximum value of SAR (measured) = 1.76 W/kg

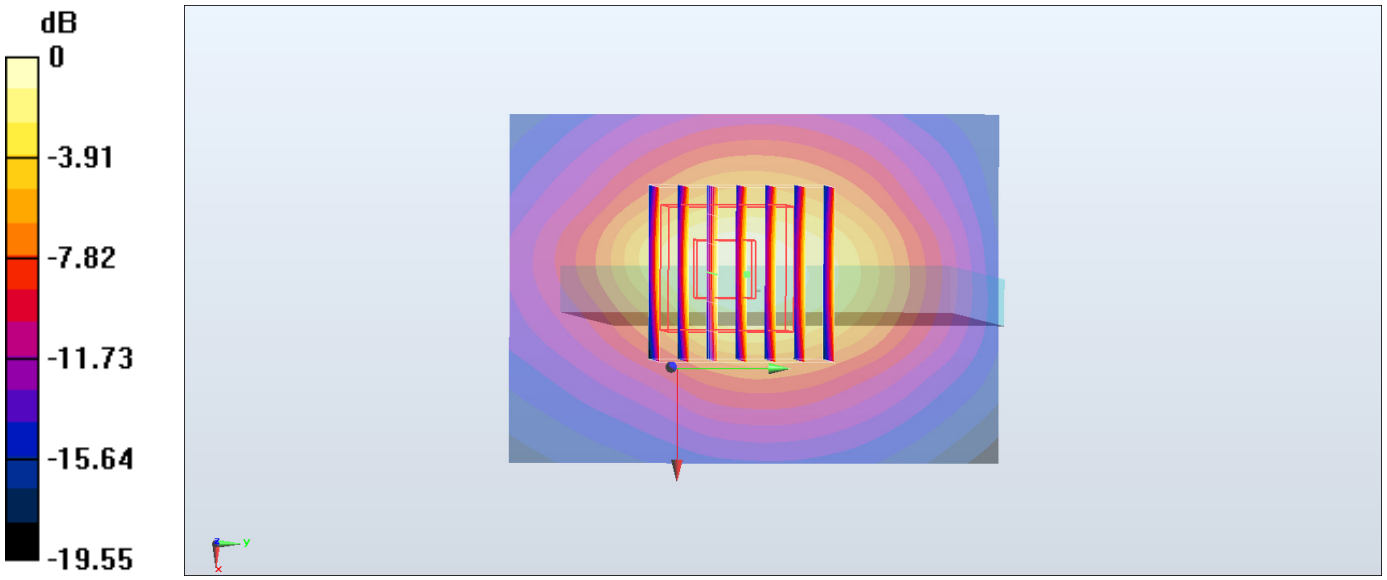

0 dB = 1.76 W/kg = 2.46 dBW/kg

#19_WLAN2.4GHz_802.11b 1Mbps_Top Side_10mm_Ch1

Communication System: 802.11b; Frequency: 2412 MHz;Duty Cycle: 1:1
Medium: MSL_2450_161103 Medium parameters used: f = 2412 MHz; σ = 1.852 S/m; ε_r = 52.333; ρ = 1000 kg/m^3
Ambient Temperature：23.5 ℃; Liquid Temperature：22.5 ℃

DASY5 Configuration
- Probe: EX3DV4 - SN3931; ConvF(7.73, 7.73, 7.73); Calibrated: 2016/10/3;
- Sensor-Surface: 1.4mm (Mechanical Surface Detection)
- Electronics: DAE3 Sn577; Calibrated: 2016/9/28
- Phantom: SAM_Left; Type: QD000P40CD; Serial: S/N:1796
- Measurement SW: DASY52, Version 52.8 (8); SEMCAD X Version 14.6.10 (7373)

Area Scan (51x81x1): Interpolated grid: dx=1.200 mm, dy=1.200 mm
Maximum value of SAR (interpolated) = 0.637 W/kg

Zoom Scan (7x7x7)/Cube 0: Measurement grid: dx=5mm, dy=5mm, dz=5mm
Reference Value = 15.11 V/m; Power Drift = -0.09 dB
Peak SAR (extrapolated) = 0.768 W/kg
SAR(1 g) = 0.394 W/kg; SAR(10 g) = 0.199 W/kg
Maximum value of SAR (measured) = 0.614 W/kg

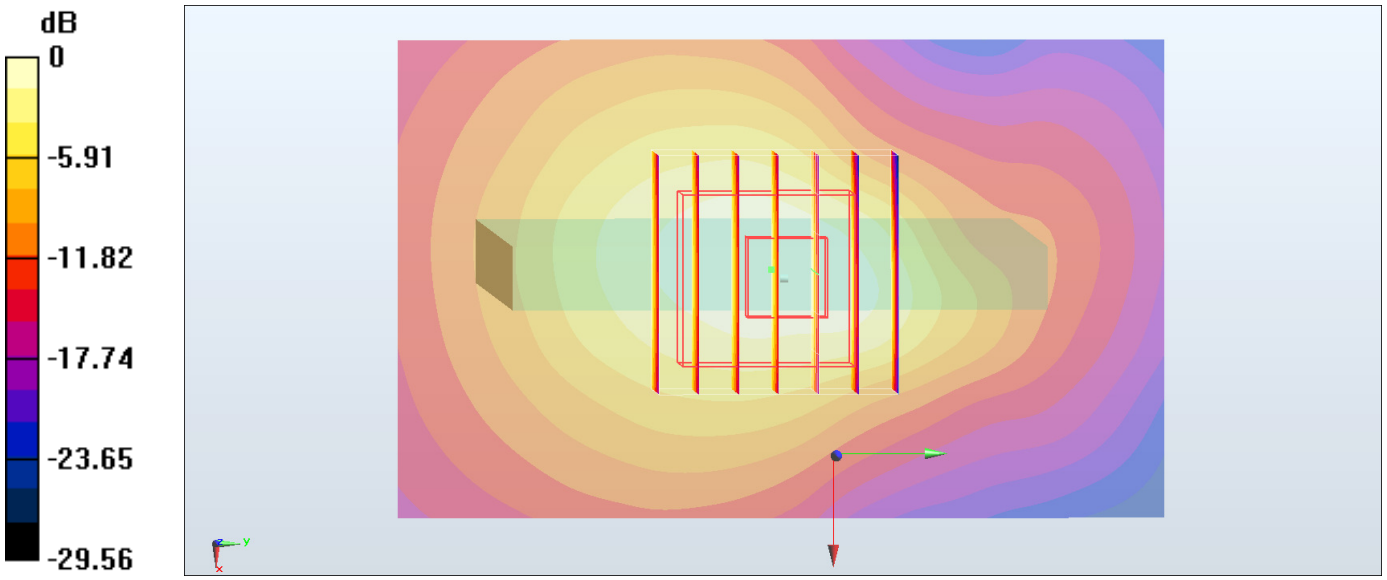

0 dB = 0.614 W/kg = -2.12 dBW/kg

#20_GSM850_GPRS (4 Tx slots)_Back_15mm_Ch251

Communication System: GSM850; Frequency: 848.8 MHz;Duty Cycle: 1:2.08
Medium: MSL_850_161020 Medium parameters used: f = 849 MHz; σ = 0.993 S/m; ε_r = 56.334; ρ = 1000 kg/m^3
Ambient Temperature：23.8 ℃; Liquid Temperature：22.8 ℃

DASY5 Configuration
- Probe: EX3DV4 - SN3820; ConvF(8.86, 8.86, 8.86); Calibrated: 2016/6/27;
- Sensor-Surface: 1.4mm (Mechanical Surface Detection)
- Electronics: DAE4 Sn679; Calibrated: 2016/6/13
- Phantom: SAM_Left; Type: QD000P40CD; Serial: S/N:1796
- Measurement SW: DASY52, Version 52.8 (8); SEMCAD X Version 14.6.10 (7373)

Area Scan (61x121x1): Interpolated grid: dx=1.500 mm, dy=1.500 mm
Maximum value of SAR (interpolated) = 0.437 W/kg

Zoom Scan (5x5x7)/Cube 0: Measurement grid: dx=8mm, dy=8mm, dz=5mm
Reference Value = 21.22 V/m; Power Drift = -0.08 dB
Peak SAR (extrapolated) = 0.469 W/kg
SAR(1 g) = 0.361 W/kg; SAR(10 g) = 0.285 W/kg
Maximum value of SAR (measured) = 0.431 W/kg

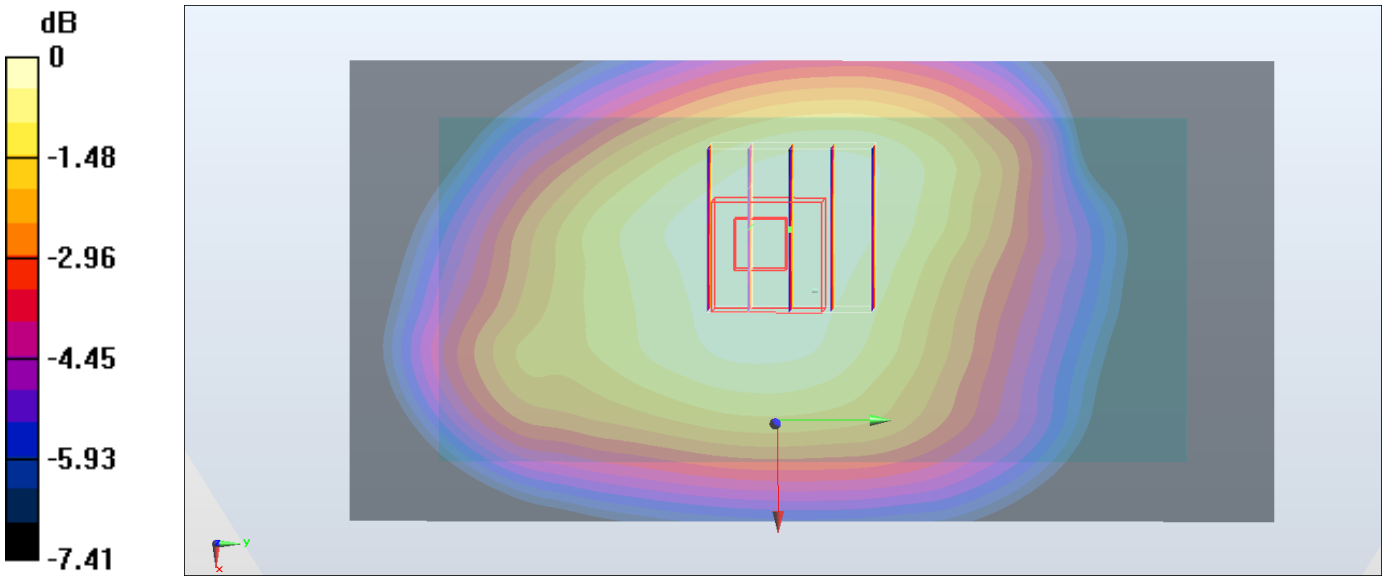

0 dB = 0.431 W/kg = -3.66 dBW/kg

#21_GSM1900_GPRS (3 Tx slots)_Back_15mm_Ch810

Communication System: PCS ; Frequency: 1909.8 MHz;Duty Cycle: 1:2.77
Medium: MSL_1900_161019 Medium parameters used: f = 1910 MHz; σ = 1.529 S/m; ε_r = 54.677; ρ = 1000 kg/m^3
Ambient Temperature：23.2 ℃; Liquid Temperature：22.2 ℃

DASY5 Configuration
- Probe: EX3DV4 - SN3820; ConvF(7.41, 7.41, 7.41); Calibrated: 2016/6/27;
- Sensor-Surface: 1.4mm (Mechanical Surface Detection)
- Electronics: DAE4 Sn679; Calibrated: 2016/6/13
- Phantom: SAM_Left; Type: QD000P40CD; Serial: S/N:1796
- Measurement SW: DASY52, Version 52.8 (8); SEMCAD X Version 14.6.10 (7373)

Area Scan (61x61x1): Interpolated grid: dx=1.500 mm, dy=1.500 mm
Maximum value of SAR (interpolated) = 0.451 W/kg

Zoom Scan (5x5x7)/Cube 0: Measurement grid: dx=8mm, dy=8mm, dz=5mm
Reference Value = 15.18 V/m; Power Drift = -0.06 dB
Peak SAR (extrapolated) = 0.556 W/kg
SAR(1 g) = 0.335 W/kg; SAR(10 g) = 0.198 W/kg
Maximum value of SAR (measured) = 0.483 W/kg

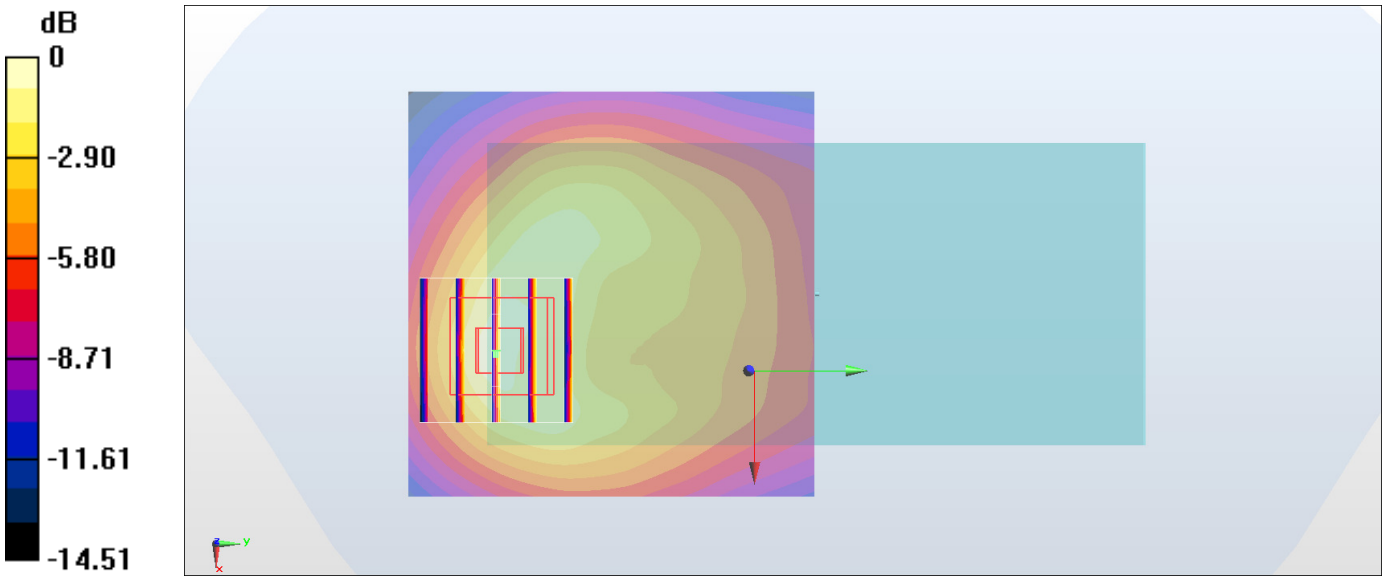

0 dB = 0.483 W/kg = -3.16 dBW/kg

#22_WCDMA II_RMC 12.2Kbps_Back_15mm_Ch9538

Communication System: WCDMA; Frequency: 1907.6 MHz;Duty Cycle: 1:1
Medium: MSL_1900_161019 Medium parameters used: f = 1908 MHz; σ = 1.527 S/m; ε_r = 54.684; ρ = 1000 kg/m^3
Ambient Temperature：23.2 ℃; Liquid Temperature：22.2 ℃

DASY5 Configuration
- Probe: EX3DV4 - SN3820; ConvF(7.41, 7.41, 7.41); Calibrated: 2016/6/27;
- Sensor-Surface: 1.4mm (Mechanical Surface Detection)
- Electronics: DAE4 Sn679; Calibrated: 2016/6/13
- Phantom: SAM_Left; Type: QD000P40CD; Serial: S/N:1796
- Measurement SW: DASY52, Version 52.8 (8); SEMCAD X Version 14.6.10 (7373)

Area Scan (61x61x1): Interpolated grid: dx=1.500 mm, dy=1.500 mm
Maximum value of SAR (interpolated) = 0.858 W/kg

Zoom Scan (5x5x7)/Cube 0: Measurement grid: dx=8mm, dy=8mm, dz=5mm
Reference Value = 20.88 V/m; Power Drift = -0.03 dB
Peak SAR (extrapolated) = 1.06 W/kg
SAR(1 g) = 0.646 W/kg; SAR(10 g) = 0.381 W/kg
Maximum value of SAR (measured) = 0.916 W/kg

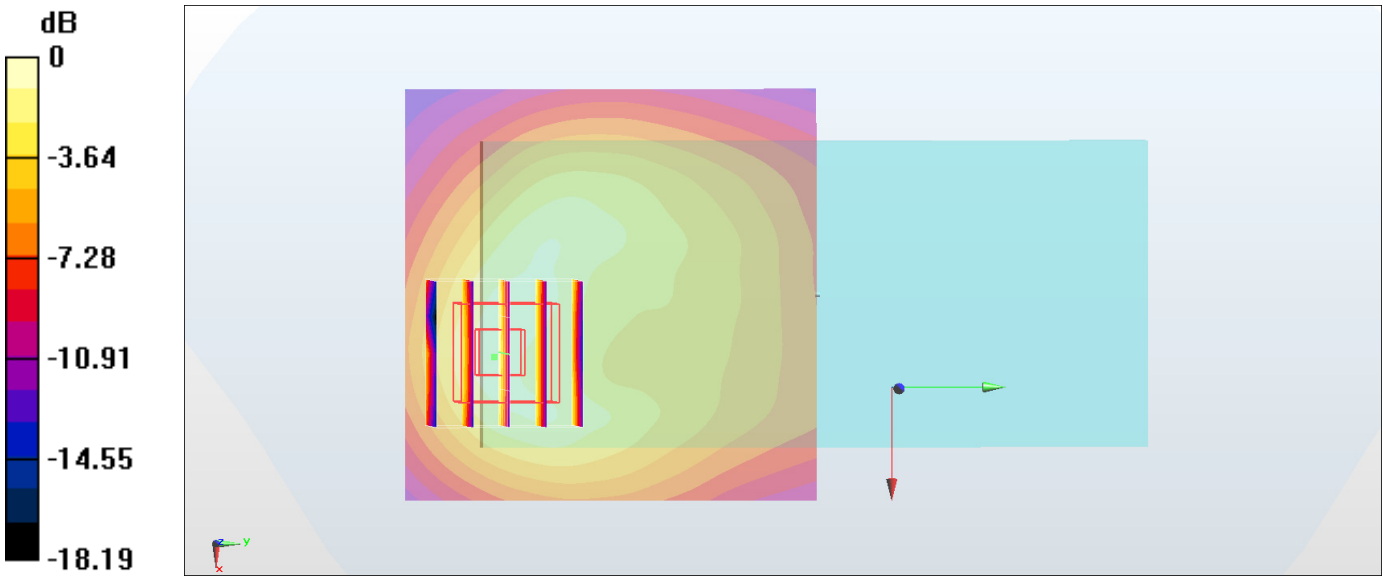

0 dB = 0.916 W/kg = -0.38 dBW/kg

#23_WCDMA V_RMC 12.2Kbps_Back_15mm_Ch4132

Communication System: WCDMA ; Frequency: 826.4 MHz;Duty Cycle: 1:1
Medium: MSL_850_161020 Medium parameters used: f = 826.4 MHz; σ = 0.972 S/m; ε_r = 56.559; ρ = 1000 kg/m^3
Ambient Temperature：23.8 ℃; Liquid Temperature：22.8 ℃

DASY5 Configuration
- Probe: EX3DV4 - SN3820; ConvF(8.86, 8.86, 8.86); Calibrated: 2016/6/27;
- Sensor-Surface: 1.4mm (Mechanical Surface Detection)
- Electronics: DAE4 Sn679; Calibrated: 2016/6/13
- Phantom: SAM_Left; Type: QD000P40CD; Serial: S/N:1796
- Measurement SW: DASY52, Version 52.8 (8); SEMCAD X Version 14.6.10 (7373)

Area Scan (61x121x1): Interpolated grid: dx=1.500 mm, dy=1.500 mm
Maximum value of SAR (interpolated) = 0.367 W/kg

Zoom Scan (5x5x7)/Cube 0: Measurement grid: dx=8mm, dy=8mm, dz=5mm
Reference Value = 20.03 V/m; Power Drift = -0.08 dB
Peak SAR (extrapolated) = 0.398 W/kg
SAR(1 g) = 0.314 W/kg; SAR(10 g) = 0.250 W/kg
Maximum value of SAR (measured) = 0.369 W/kg

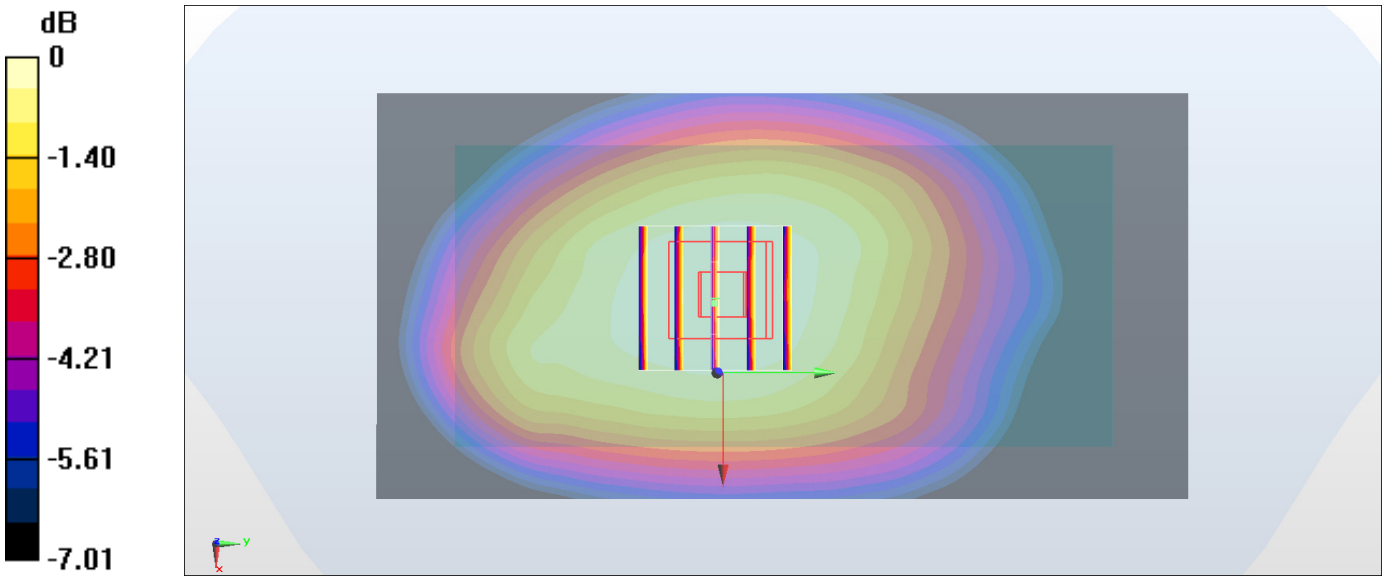

0 dB = 0.369 W/kg = -4.33 dBW/kg

#24_LTE Band 2_20M_QPSK_1_0_Back_15mm_Ch18700

Communication System: LTE; Frequency: 1860 MHz;Duty Cycle: 1:1
Medium: MSL_1900_161019 Medium parameters used: f = 1860 MHz; σ = 1.474 S/m; ε_r = 54.841; ρ = 1000 kg/m^3
Ambient Temperature：23.2 ℃; Liquid Temperature：22.2 ℃

DASY5 Configuration
- Probe: EX3DV4 - SN3820; ConvF(7.41, 7.41, 7.41); Calibrated: 2016/6/27;
- Sensor-Surface: 1.4mm (Mechanical Surface Detection)
- Electronics: DAE4 Sn679; Calibrated: 2016/6/13
- Phantom: SAM_Left; Type: QD000P40CD; Serial: S/N:1796
- Measurement SW: DASY52, Version 52.8 (8); SEMCAD X Version 14.6.10 (7373)

Area Scan (61x71x1): Interpolated grid: dx=1.500 mm, dy=1.500 mm
Maximum value of SAR (interpolated) = 1.05 W/kg

Zoom Scan (5x5x7)/Cube 0: Measurement grid: dx=8mm, dy=8mm, dz=5mm
Reference Value = 23.97 V/m; Power Drift = -0.02 dB
Peak SAR (extrapolated) = 1.30 W/kg
SAR(1 g) = 0.816 W/kg; SAR(10 g) = 0.490 W/kg
Maximum value of SAR (measured) = 1.13 W/kg

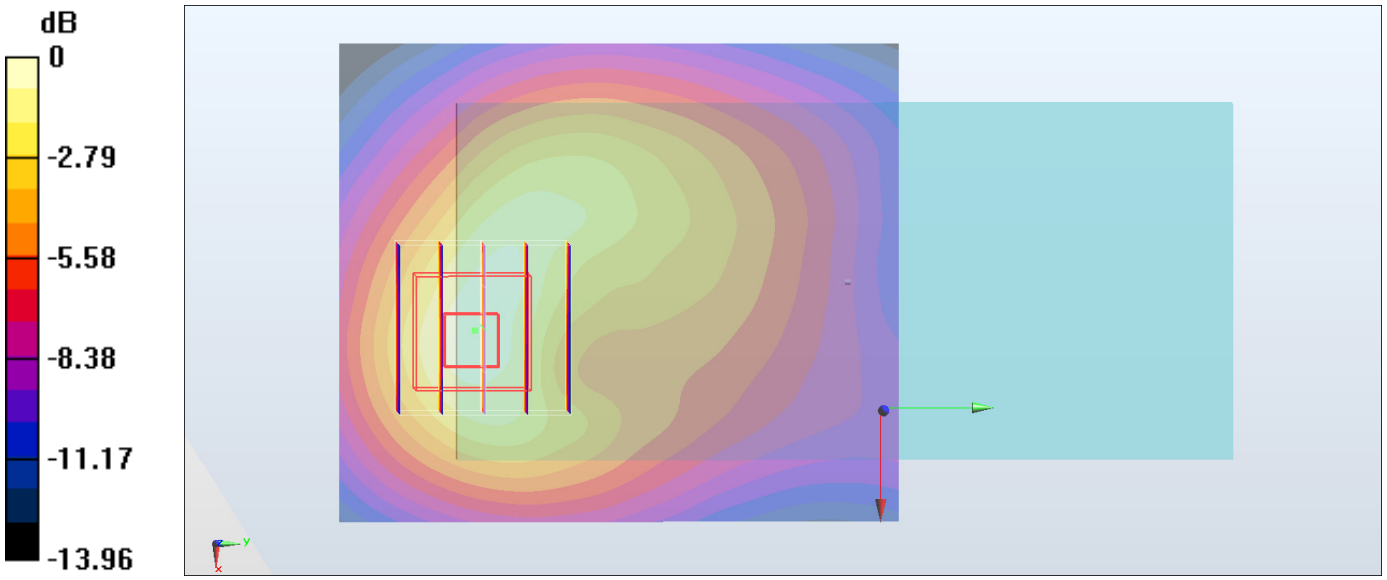

0 dB = 1.13 W/kg = 0.53 dBW/kg

#25_LTE Band 5_10M_QPSK_1_0_Back_15mm_Ch20525

Communication System: LTE; Frequency: 836.5 MHz;Duty Cycle: 1:1
Medium: MSL_850_161020 Medium parameters used: f = 836.5 MHz; σ = 0.981 S/m; ε_r = 56.459; ρ = 1000 kg/m^3
Ambient Temperature：23.8 ℃; Liquid Temperature：22.8 ℃

DASY5 Configuration
- Probe: EX3DV4 - SN3820; ConvF(8.86, 8.86, 8.86); Calibrated: 2016/6/27;
- Sensor-Surface: 1.4mm (Mechanical Surface Detection)
- Electronics: DAE4 Sn679; Calibrated: 2016/6/13
- Phantom: SAM_Left; Type: QD000P40CD; Serial: S/N:1796
- Measurement SW: DASY52, Version 52.8 (8); SEMCAD X Version 14.6.10 (7373)

Area Scan (61x121x1): Interpolated grid: dx=1.500 mm, dy=1.500 mm
Maximum value of SAR (interpolated) = 0.316 W/kg

Zoom Scan (5x5x7)/Cube 0: Measurement grid: dx=8mm, dy=8mm, dz=5mm
Reference Value = 18.59 V/m; Power Drift = -0.07 dB
Peak SAR (extrapolated) = 0.342 W/kg
SAR(1 g) = 0.266 W/kg; SAR(10 g) = 0.211 W/kg
Maximum value of SAR (measured) = 0.315 W/kg

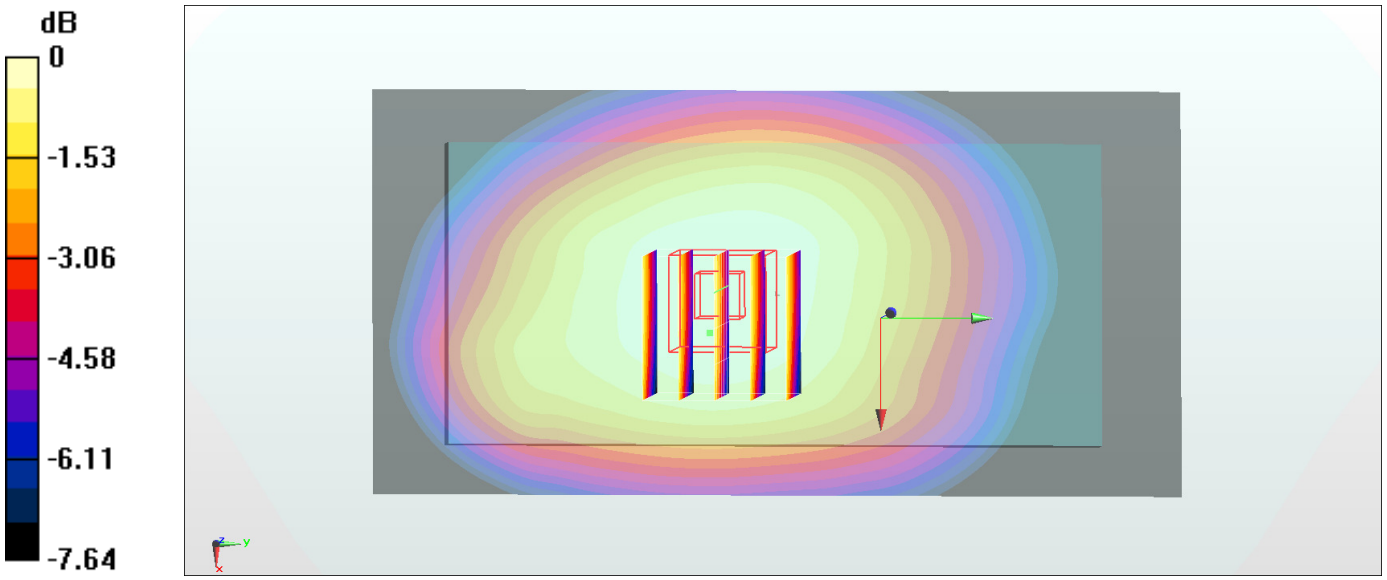

0 dB = 0.315 W/kg = -5.02 dBW/kg

#26_LTE Band 7_20M_QPSK_1_0_Back_15mm_Ch20850

Communication System: LTE; Frequency: 2510 MHz;Duty Cycle: 1:1
Medium: MSL_2600_161020 Medium parameters used: f = 2510 MHz; σ = 2.028 S/m; ε_r = 53.156; ρ = 1000 kg/m^3
Ambient Temperature：23.7 ℃; Liquid Temperature：22.7 ℃

DASY5 Configuration
- Probe: EX3DV4 - SN3820; ConvF(6.52, 6.52, 6.52); Calibrated: 2016/6/27;
- Sensor-Surface: 1.4mm (Mechanical Surface Detection)
- Electronics: DAE4 Sn679; Calibrated: 2016/6/13
- Phantom: SAM_Right; Type: QD000P40CD; Serial: S/N:1801
- Measurement SW: DASY52, Version 52.8 (8); SEMCAD X Version 14.6.10 (7373)

Area Scan (71x81x1): Interpolated grid: dx=1.200 mm, dy=1.200 mm
Maximum value of SAR (interpolated) = 0.975 W/kg

Zoom Scan (7x7x7)/Cube 0: Measurement grid: dx=5mm, dy=5mm, dz=5mm
Reference Value = 19.03 V/m; Power Drift = -0.13 dB
Peak SAR (extrapolated) = 1.10 W/kg
SAR(1 g) = 0.619 W/kg; SAR(10 g) = 0.346 W/kg
Maximum value of SAR (measured) = 0.904 W/kg

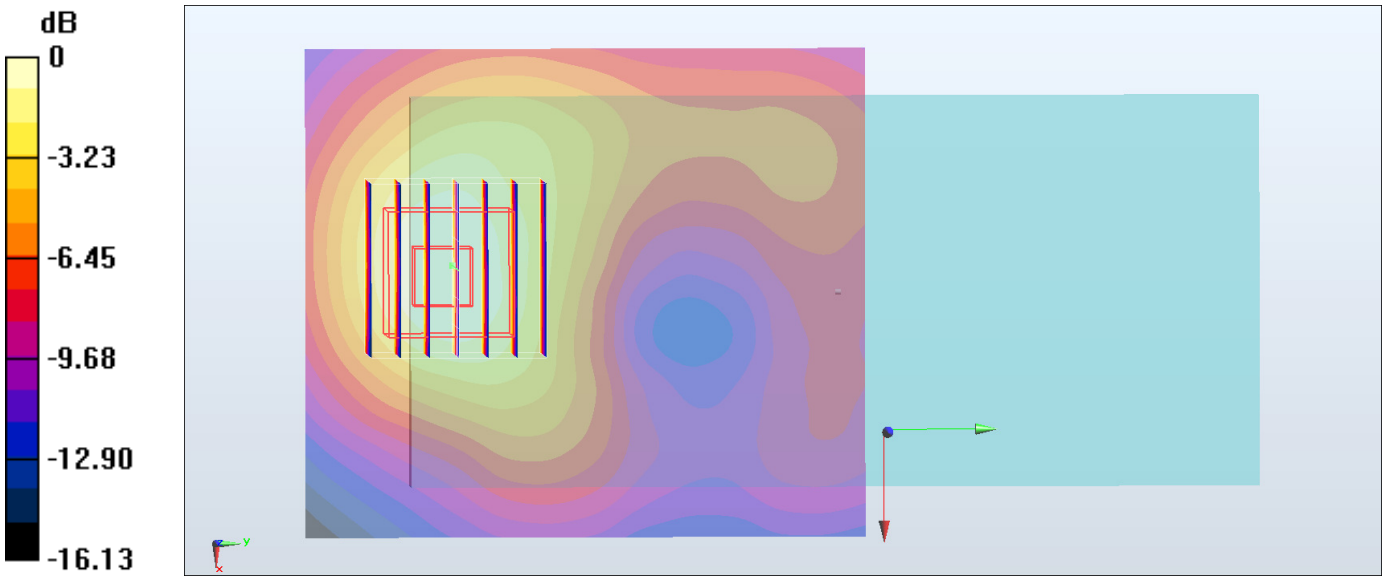

0 dB = 0.904 W/kg = -0.44 dBW/kg

#27_WLAN2.4GHz_802.11b 1Mbps_Front_15mm_Ch1

Communication System: 802.11b ; Frequency: 2412 MHz;Duty Cycle: 1:1
Medium: MSL_2450_161103 Medium parameters used: f = 2412 MHz; σ = 1.852 S/m; ε_r = 52.333; ρ = 1000 kg/m^3
Ambient Temperature：23.5 ℃; Liquid Temperature：22.5 ℃

DASY5 Configuration
- Probe: EX3DV4 - SN3820; ConvF(6.79, 6.79, 6.79); Calibrated: 2016/6/27;
- Sensor-Surface: 1.4mm (Mechanical Surface Detection)
- Electronics: DAE4 Sn679; Calibrated: 2016/6/13
- Phantom: SAM_Left; Type: QD000P40CD; Serial: S/N:1796
- Measurement SW: DASY52, Version 52.8 (8); SEMCAD X Version 14.6.10 (7373)

Area Scan (71x71x1): Interpolated grid: dx=1.200 mm, dy=1.200 mm
Maximum value of SAR (interpolated) = 0.266 W/kg

Zoom Scan (7x7x7)/Cube 0: Measurement grid: dx=5mm, dy=5mm, dz=5mm
Reference Value = 11.83 V/m; Power Drift = -0.05 dB
Peak SAR (extrapolated) = 0.310 W/kg
SAR(1 g) = 0.178 W/kg; SAR(10 g) = 0.102 W/kg
Maximum value of SAR (measured) = 0.257 W/kg

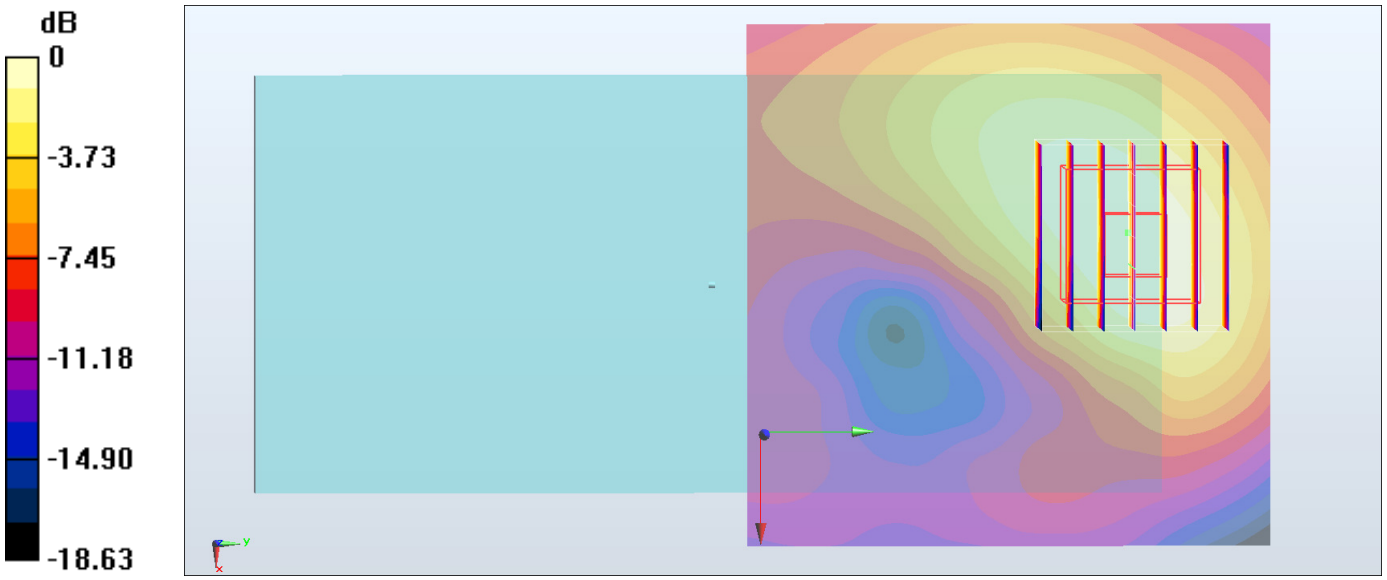

0 dB = 0.257 W/kg = -5.90 dBW/kg

#28_WLAN5GHz_802.11a 6Mbps_Front_15mm_Ch52

Communication System: 802.11a ; Frequency: 5260 MHz;Duty Cycle: 1:1.036
Medium: MSL_5G_161026 Medium parameters used: f = 5260 MHz; σ = 5.537 S/m; ε_r = 46.918; ρ = 1000 kg/m^3
Ambient Temperature：23.5 ℃; Liquid Temperature：22.5 ℃

DASY5 Configuration
- Probe: EX3DV4 - SN3820; ConvF(3.95, 3.95, 3.95); Calibrated: 2016/6/27;
- Sensor-Surface: 1.4mm (Mechanical Surface Detection)
- Electronics: DAE4 Sn679; Calibrated: 2016/6/13
- Phantom: SAM_Right; Type: QD000P40CD; Serial: S/N:1801
- Measurement SW: DASY52, Version 52.8 (8); SEMCAD X Version 14.6.10 (7373)

Area Scan (101x101x1): Interpolated grid: dx=1.000 mm, dy=1.000 mm
Maximum value of SAR (interpolated) = 0.174 W/kg

Zoom Scan (7x7x7)/Cube 0: Measurement grid: dx=4mm, dy=4mm, dz=1.4mm
Reference Value = 6.621 V/m; Power Drift = -0.16 dB
Peak SAR (extrapolated) = 0.820 W/kg
SAR(1 g) = 0.118 W/kg; SAR(10 g) = 0.042 W/kg
Maximum value of SAR (measured) = 0.266 W/kg

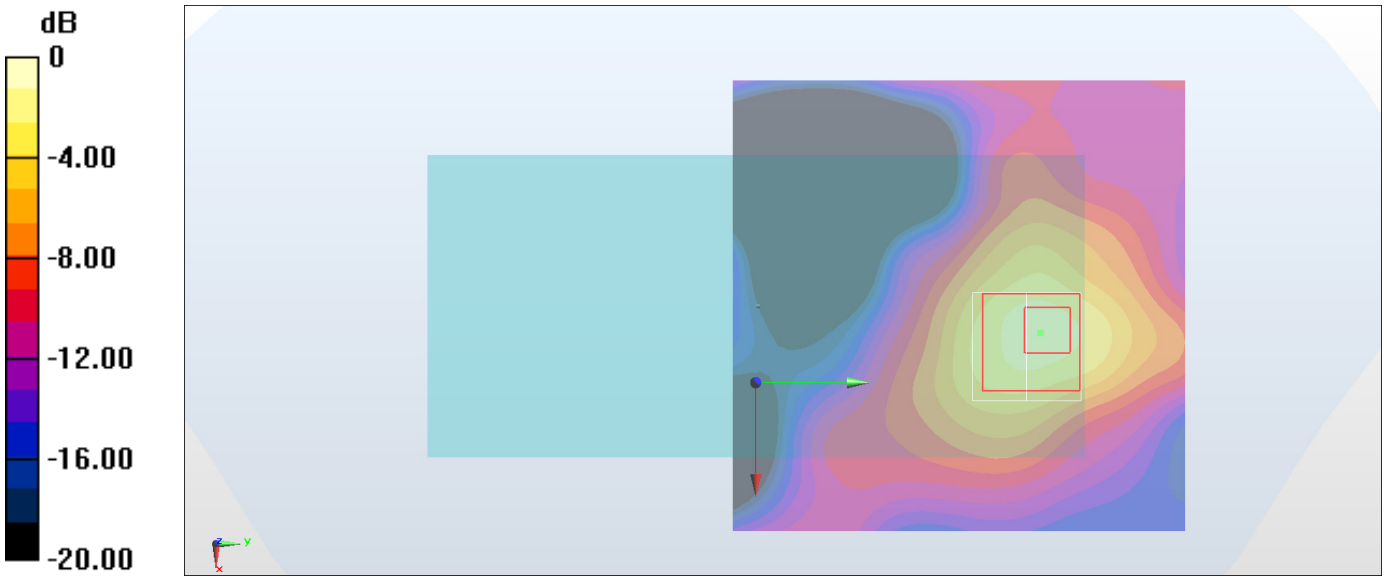

0 dB = 0.266 W/kg = -5.75 dBW/kg

#29_WLAN5GHz_802.11a 6Mbps_Back_15mm_Ch100

Communication System: 802.11a; Frequency: 5500 MHz;Duty Cycle: 1:1.036
Medium: MSL_5G_161026 Medium parameters used: f = 5500 MHz; σ = 5.851 S/m; ε_r = 46.506; ρ = 1000 kg/m^3
Ambient Temperature：23.5 ℃; Liquid Temperature：22.5 ℃

DASY5 Configuration
- Probe: EX3DV4 - SN3820; ConvF(3.71, 3.71, 3.71); Calibrated: 2016/6/27;
- Sensor-Surface: 1.4mm (Mechanical Surface Detection)
- Electronics: DAE4 Sn679; Calibrated: 2016/6/13
- Phantom: SAM_Right; Type: QD000P40CD; Serial: S/N:1801
- Measurement SW: DASY52, Version 52.8 (8); SEMCAD X Version 14.6.10 (7373)

Area Scan (101x101x1): Interpolated grid: dx=1.000 mm, dy=1.000 mm
Maximum value of SAR (interpolated) = 1.04 W/kg

Zoom Scan (7x7x7)/Cube 0: Measurement grid: dx=4mm, dy=4mm, dz=1.4mm
Reference Value = 11.52 V/m; Power Drift = -0.13 dB
Peak SAR (extrapolated) = 0.932 W/kg
SAR(1 g) = 0.269 W/kg; SAR(10 g) = 0.095 W/kg
Maximum value of SAR (measured) = 0.586 W/kg

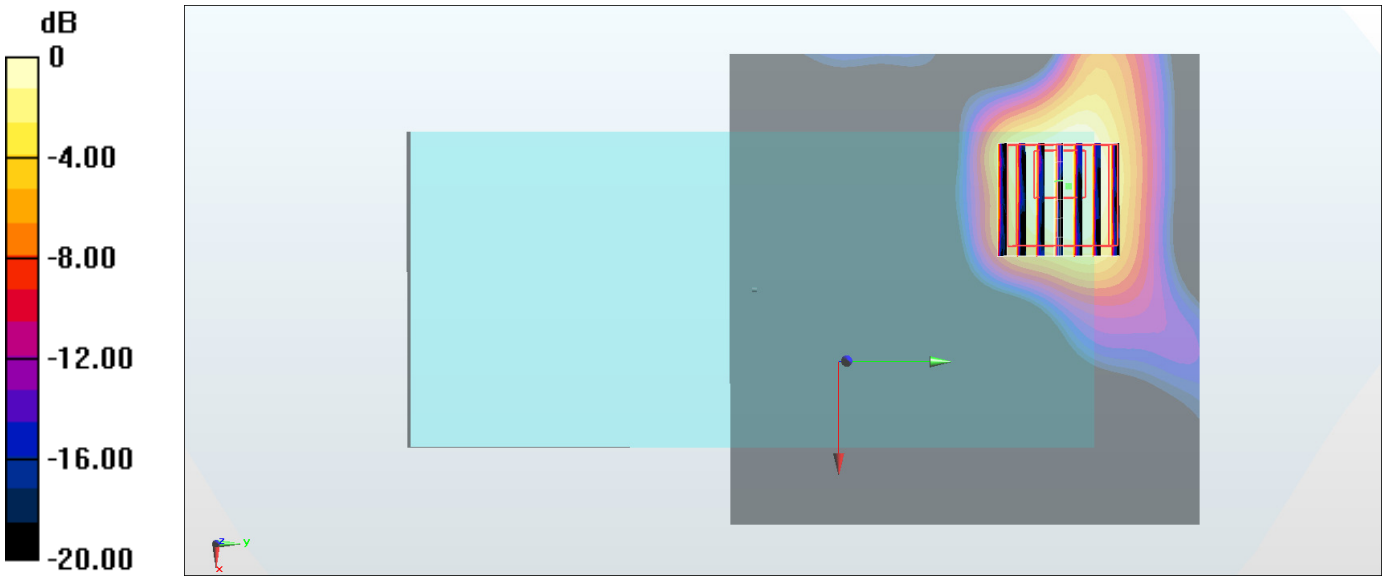

0 dB = 0.586 W/kg = -2.32 dBW/kg

#30_WLAN5GHz_802.11a 6Mbps_Back_15mm_Ch149

Communication System: 802.11a ; Frequency: 5745 MHz;Duty Cycle: 1:1.036
Medium: MSL_5G_161026 Medium parameters used: f = 5745 MHz; σ = 6.186 S/m; ε_r = 46.101; ρ = 1000 kg/m^3
Ambient Temperature：23.5 ℃; Liquid Temperature：22.5 ℃

DASY5 Configuration
- Probe: EX3DV4 - SN3820; ConvF(3.7, 3.7, 3.7); Calibrated: 2016/6/27;
- Sensor-Surface: 1.4mm (Mechanical Surface Detection)
- Electronics: DAE4 Sn679; Calibrated: 2016/6/13
- Phantom: SAM_Right; Type: QD000P40CD; Serial: S/N:1801
- Measurement SW: DASY52, Version 52.8 (8); SEMCAD X Version 14.6.10 (7373)

Area Scan (101x101x1): Interpolated grid: dx=1.000 mm, dy=1.000 mm
Maximum value of SAR (interpolated) = 0.364 W/kg

Zoom Scan (7x7x7)/Cube 0: Measurement grid: dx=4mm, dy=4mm, dz=1.4mm
Reference Value = 7.696 V/m; Power Drift = 0.17 dB
Peak SAR (extrapolated) = 0.559 W/kg
SAR(1 g) = 0.138 W/kg; SAR(10 g) = 0.055 W/kg
Maximum value of SAR (measured) = 0.308 W/kg

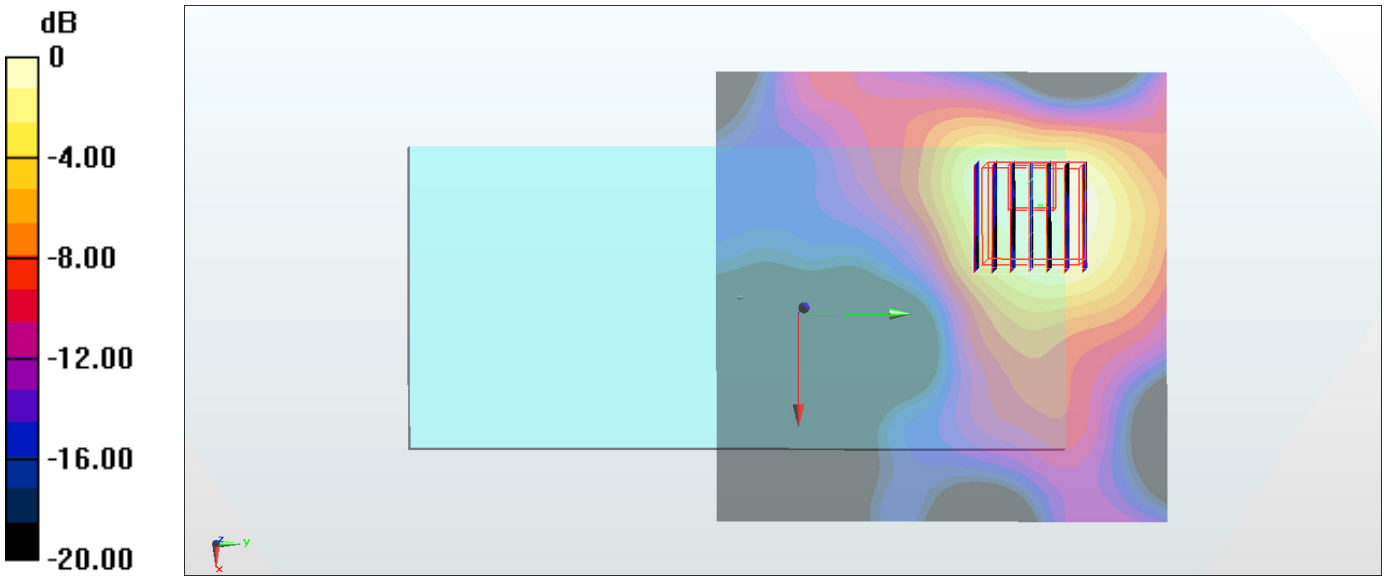

0 dB = 0.308 W/kg = -5.11 dBW/kg