System Check_Head_835MHz

DUT: D835V2-4d167

Communication System: CW; Frequency: 835 MHz;Duty Cycle: 1:1
Medium: HSL_850_180530 Medium parameters used: f = 835 MHz; σ = 0.886 S/m; ε_r = 42.045; ρ = 1000 kg/m^3
Ambient Temperature：23.5 ℃; Liquid Temperature：22.5 ℃

DASY5 Configuration:
- Probe: ES3DV3 - SN3270; ConvF(6.18, 6.18, 6.18); Calibrated: 2017/9/25
- Sensor-Surface: 3mm (Mechanical Surface Detection)
- Electronics: DAE4 Sn853; Calibrated: 2017/7/19
- Phantom: SAM_Right; Type: SAM; Serial: TP:1479
- Measurement SW: DASY52, Version 52.10 (1);SEMCAD X Version 14.6.11 (7439)

Pin=250mW/Area Scan (61x61x1): Interpolated grid: dx=1.500 mm, dy=1.500 mm
Maximum value of SAR (interpolated) = 2.84 W/kg

Pin=250mW/Zoom Scan (5x5x7)/Cube 0: Measurement grid: dx=8mm, dy=8mm, dz=5mm
Reference Value = 57.99 V/m; Power Drift = -0.02 dB
Peak SAR (extrapolated) = 3.40 W/kg
SAR(1 g) = 2.28 W/kg; SAR(10 g) = 1.5 W/kg
Maximum value of SAR (measured) = 2.64 W/kg

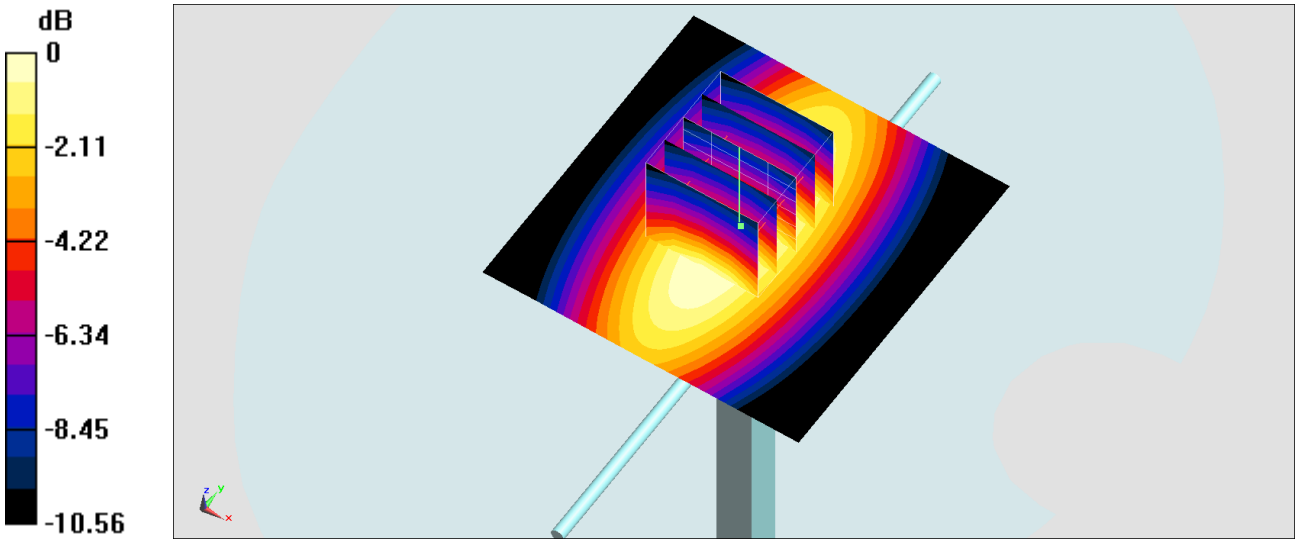

0 dB = 2.64 W/kg = 4.22 dBW/kg

System Check_Body_835MHz

DUT: D835V2-4d167

Communication System: CW; Frequency: 835 MHz;Duty Cycle: 1:1
Medium: MSL_850_180529 Medium parameters used: f = 835 MHz; σ = 0.957 S/m; ε_r = 54.763; ρ = 1000 kg/m^3
Ambient Temperature：23.2 ℃; Liquid Temperature：22.2 ℃

DASY5 Configuration:
- Probe: ES3DV3 - SN3270; ConvF(6.09, 6.09, 6.09); Calibrated: 2017/9/25
- Sensor-Surface: 3mm (Mechanical Surface Detection)
- Electronics: DAE4 Sn853; Calibrated: 2017/7/19
- Phantom: SAM_Left; Type: QD000P40CD; Serial: TP:1477
- Measurement SW: DASY52, Version 52.10 (1);SEMCAD X Version 14.6.11 (7439)

Pin=250mW/Area Scan (61x61x1): Interpolated grid: dx=1.500 mm, dy=1.500 mm
Maximum value of SAR (interpolated) = 2.83 W/kg

Pin=250mW/Zoom Scan (5x5x7)/Cube 0: Measurement grid: dx=8mm, dy=8mm, dz=5mm
Reference Value = 55.34 V/m; Power Drift = -0.08 dB
Peak SAR (extrapolated) = 3.58 W/kg
SAR(1 g) = 2.46 W/kg; SAR(10 g) = 1.63 W/kg
Maximum value of SAR (measured) = 2.87 W/kg

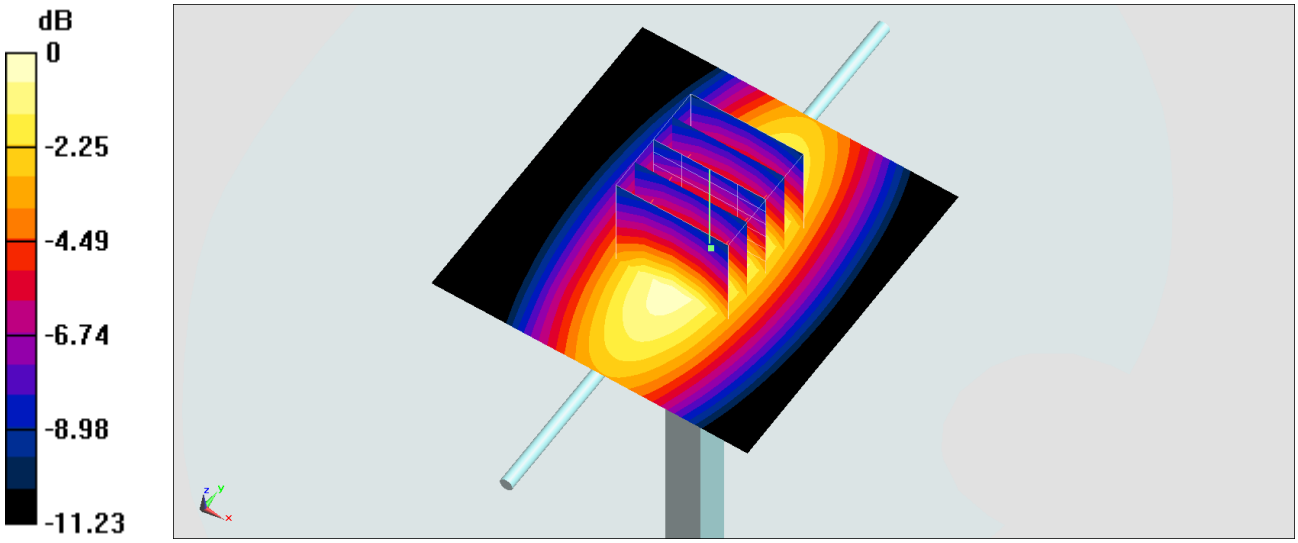

0 dB = 2.87 W/kg = 4.58 dBW/kg

System Check_Head_1900MHz

DUT: D1900V2-5d041

Communication System: CW; Frequency: 1900 MHz;Duty Cycle: 1:1
Medium: HSL_1900_180530 Medium parameters used: f = 1900 MHz; σ = 1.43 S/m; ε_r = 39.244; ρ = 1000 kg/m^3
Ambient Temperature：23.5 ℃; Liquid Temperature：22.5 ℃

DASY5 Configuration:
- Probe: ES3DV3 - SN3270; ConvF(5.2, 5.2, 5.2); Calibrated: 2017/9/25
- Sensor-Surface: 3mm (Mechanical Surface Detection)
- Electronics: DAE4 Sn853; Calibrated: 2017/7/19
- Phantom: SAM_Left; Type: QD000P40CD; Serial: TP:1477
- Measurement SW: DASY52, Version 52.10 (1);SEMCAD X Version 14.6.11 (7439)

Pin=250mW/Area Scan (61x61x1): Interpolated grid: dx=1.500 mm, dy=1.500 mm
Maximum value of SAR (interpolated) = 12.6 W/kg

Pin=250mW/Zoom Scan (5x5x7)/Cube 0: Measurement grid: dx=8mm, dy=8mm, dz=5mm
Reference Value = 95.19 V/m; Power Drift = 0.07 dB
Peak SAR (extrapolated) = 17.9 W/kg
SAR(1 g) = 9.81 W/kg; SAR(10 g) = 5.13 W/kg
Maximum value of SAR (measured) = 12.1 W/kg

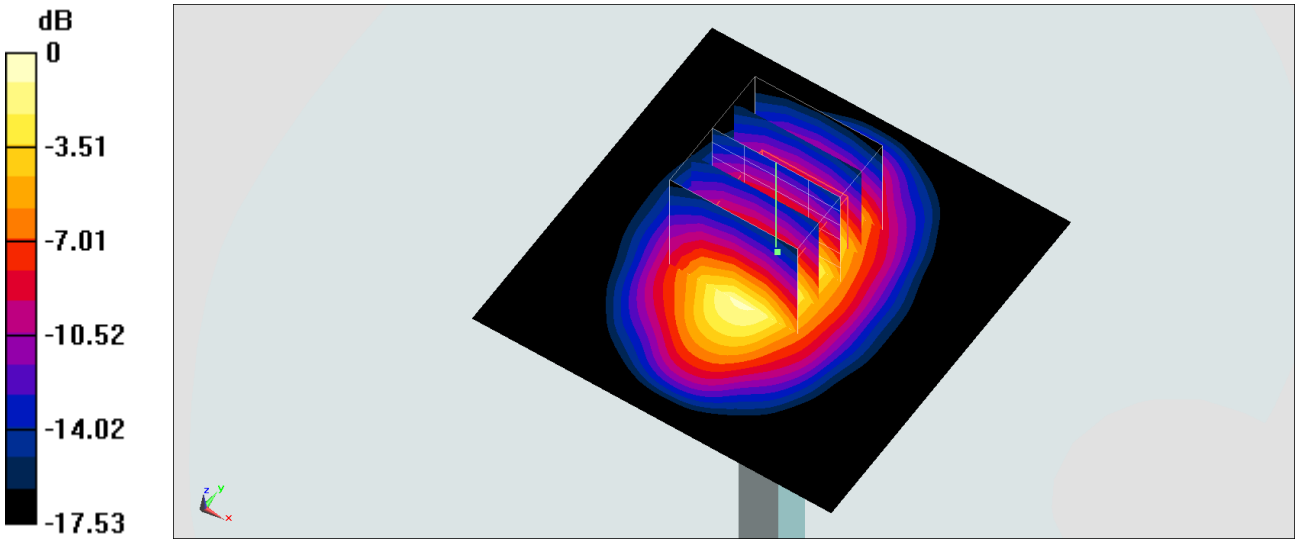

0 dB = 12.1 W/kg = 10.83 dBW/kg

System Check_Body_1900MHz

DUT: D1900V2-5d041

Communication System: CW; Frequency: 1900 MHz;Duty Cycle: 1:1
Medium: MSL_1900_180530 Medium parameters used: f = 1900 MHz; σ = 1.536 S/m; ε_r = 54.663; ρ = 1000 kg/m^3
Ambient Temperature：23.1 ℃; Liquid Temperature：22.1 ℃

DASY5 Configuration:
- Probe: ES3DV3 - SN3270; ConvF(4.9, 4.9, 4.9); Calibrated: 2017/9/25
- Sensor-Surface: 3mm (Mechanical Surface Detection)
- Electronics: DAE4 Sn853; Calibrated: 2017/7/19
- Phantom: SAM_Left; Type: QD000P40CD; Serial: TP:1477
- Measurement SW: DASY52, Version 52.10 (1);SEMCAD X Version 14.6.11 (7439)

Pin=250mW/Area Scan (61x61x1): Interpolated grid: dx=1.500 mm, dy=1.500 mm
Maximum value of SAR (interpolated) = 12.0 W/kg

Pin=250mW/Zoom Scan (5x5x7)/Cube 0: Measurement grid: dx=8mm, dy=8mm, dz=5mm
Reference Value = 91.24 V/m; Power Drift = -0.03 dB
Peak SAR (extrapolated) = 17.0 W/kg
SAR(1 g) = 9.53 W/kg; SAR(10 g) = 5.01 W/kg
Maximum value of SAR (measured) = 11.9 W/kg

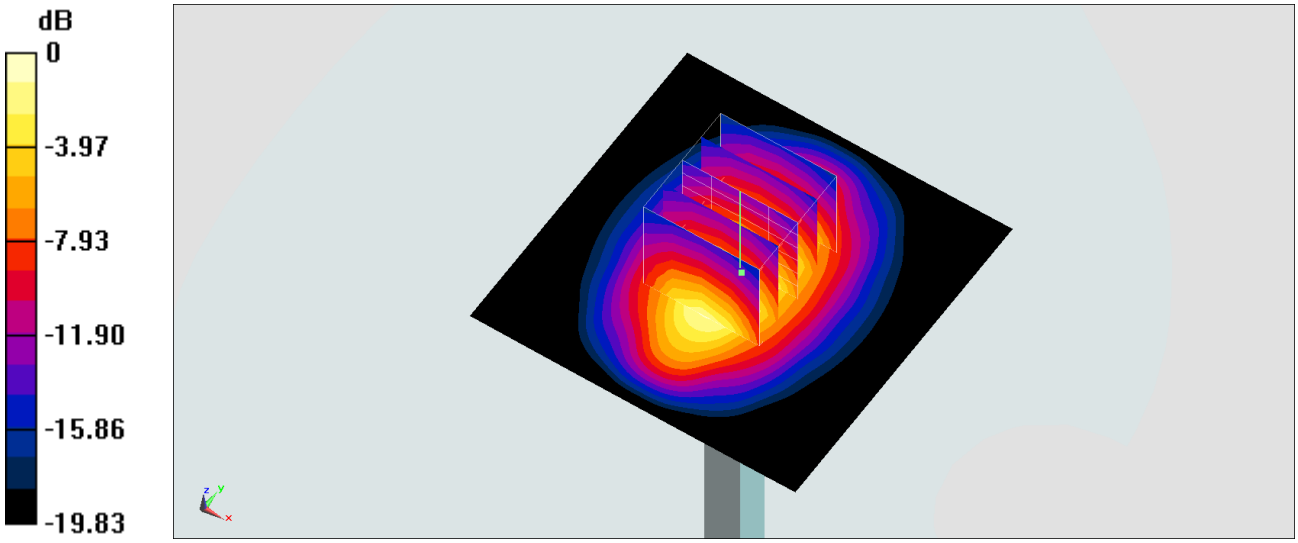

0 dB = 11.9 W/kg = 10.76 dBW/kg

System Check_Body_1900MHz

DUT: D1900V2-5d041

Communication System: CW; Frequency: 1900 MHz;Duty Cycle: 1:1
Medium: MSL_1900_180531 Medium parameters used: f = 1900 MHz; σ = 1.562 S/m; ε_r = 53.428; ρ = 1000 kg/m^3
Ambient Temperature：23.1 ℃; Liquid Temperature：22.1 ℃

DASY5 Configuration:
- Probe: ES3DV3 - SN3270; ConvF(4.9, 4.9, 4.9); Calibrated: 2017/9/25
- Sensor-Surface: 3mm (Mechanical Surface Detection)
- Electronics: DAE4 Sn853; Calibrated: 2017/7/19
- Phantom: SAM_Left; Type: QD000P40CD; Serial: TP:1477
- Measurement SW: DASY52, Version 52.10 (1);SEMCAD X Version 14.6.11 (7439)

Pin=250mW/Area Scan (61x61x1): Interpolated grid: dx=1.500 mm, dy=1.500 mm
Maximum value of SAR (interpolated) = 12.7 W/kg

Pin=250mW/Zoom Scan (5x5x7)/Cube 0: Measurement grid: dx=8mm, dy=8mm, dz=5mm
Reference Value = 90.56 V/m; Power Drift = 0.01 dB
Peak SAR (extrapolated) = 17.3 W/kg
SAR(1 g) = 9.67 W/kg; SAR(10 g) = 5.11 W/kg
Maximum value of SAR (measured) = 12.1 W/kg

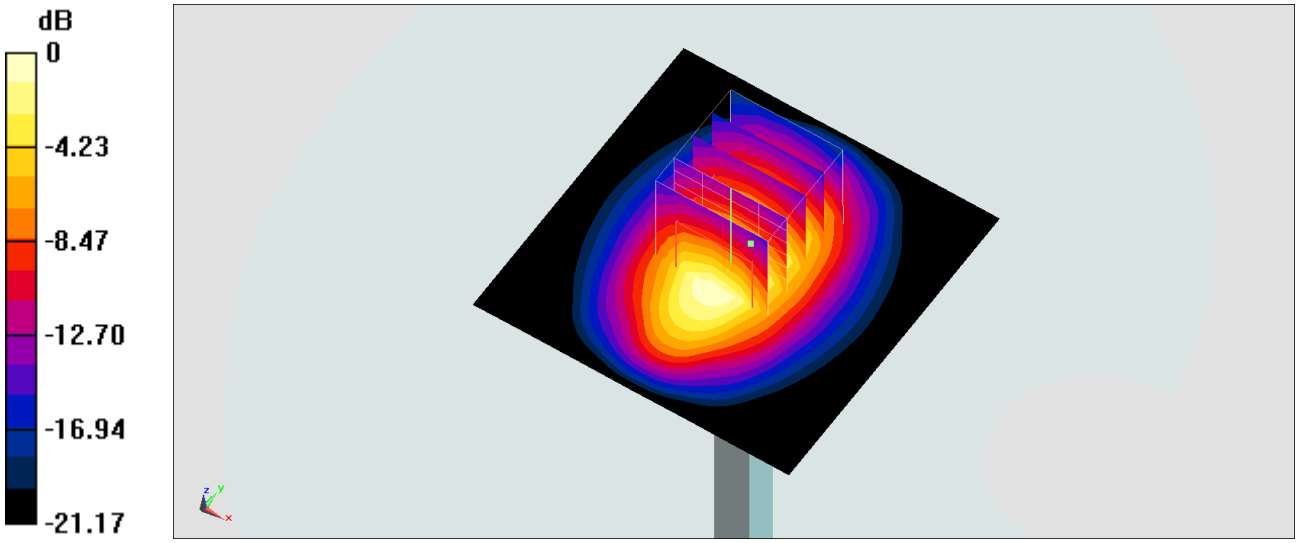

0 dB = 12.1 W/kg = 10.83 dBW/kg

System Check_Head_2450MHz

DUT: D2450V2-736

Communication System: CW; Frequency: 2450 MHz;Duty Cycle: 1:1
Medium: HSL_2450_180522 Medium parameters used: f = 2450 MHz; σ = 1.804 S/m; ε_r = 39.143; ρ = 1000 kg/m^3
Ambient Temperature：23.4 ℃; Liquid Temperature：22.4 ℃

DASY5 Configuration:
- Probe: EX3DV4 - SN3931; ConvF(7.62, 7.62, 7.62); Calibrated: 2017/9/29;
- Sensor-Surface: 1.4mm (Mechanical Surface Detection)
- Electronics: DAE3 Sn360; Calibrated: 2017/11/2
- Phantom: SAM_RIGHT; Type: QD000P40CD; Serial: 1719
- Measurement SW: DASY52, Version 52.10 (0);SEMCAD X Version 14.6.10 (7417)

Pin=250mW/Area Scan (71x71x1): Interpolated grid: dx=1.200 mm, dy=1.200 mm
Maximum value of SAR (interpolated) = 18.9 W/kg

Pin=250mW/Zoom Scan (7x7x7)/Cube 0: Measurement grid: dx=5mm, dy=5mm, dz=5mm
Reference Value = 111.0 V/m; Power Drift = 0.10 dB
Peak SAR (extrapolated) = 27.4 W/kg
SAR(1 g) = 12.6 W/kg; SAR(10 g) = 5.73 W/kg
Maximum value of SAR (measured) = 21.7 W/kg

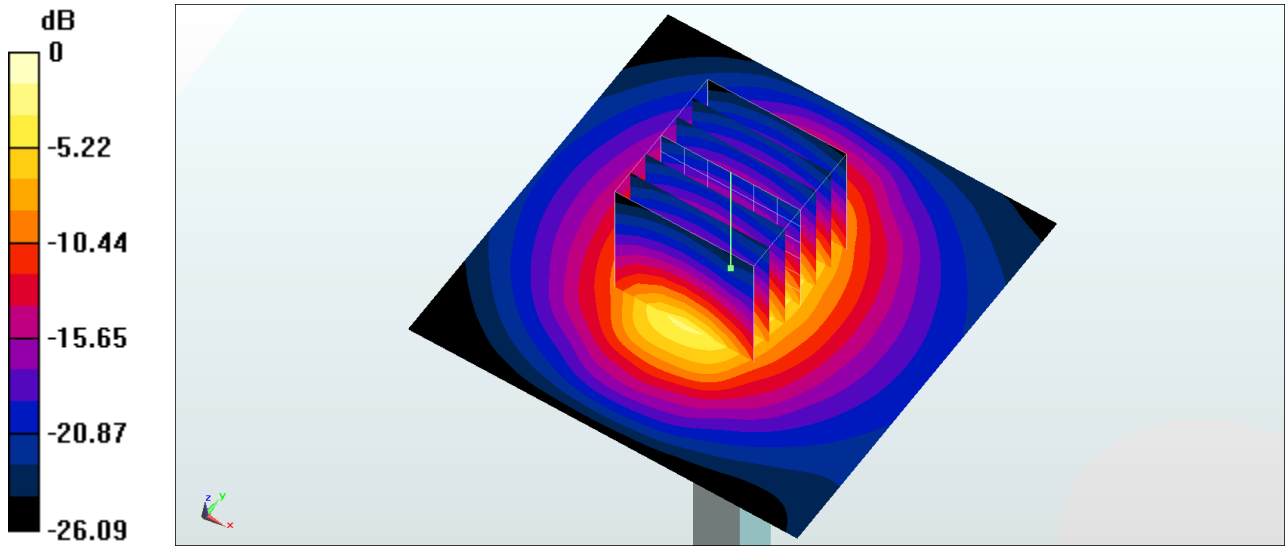

0 dB = 18.9 W/kg = 12.76 dBW/kg

System Check_Head_2450MHz

DUT: D2450V2-736

Communication System: CW; Frequency: 2450 MHz;Duty Cycle: 1:1
Medium: HSL_2450_180529 Medium parameters used : f = 2450 MHz; σ = 1.807 S/m; ε_r = 38.59; ρ = 1000 kg/m^3
Ambient Temperature：23.2 ℃; Liquid Temperature：22.2 ℃

DASY5 Configuration:
- Probe: EX3DV4 - SN7346; ConvF(7.49, 7.49, 7.49); Calibrated: 2018/2/28
- Sensor-Surface: 1.4mm (Mechanical Surface Detection)
- Electronics: DAE4 Sn1399; Calibrated: 2017/11/16
- Phantom: SAM_Left; Type: QD000P40CD; Serial: TP:1815
- Measurement SW: DASY52, Version 52.10 (1);SEMCAD X Version 14.6.11 (7437)

Pin=250mW/Area Scan (61x61x1): Interpolated grid: dx=1.200 mm, dy=1.200 mm
Maximum value of SAR (interpolated) = 24.1 W/kg

Pin=250mW/Zoom Scan (7x7x7)/Cube 0: Measurement grid: dx=5mm, dy=5mm, dz=5mm
Reference Value = 119.6 V/m; Power Drift = -0.14 dB
Peak SAR (extrapolated) = 29.2 W/kg
SAR(1 g) = 14 W/kg; SAR(10 g) = 6.53 W/kg
Maximum value of SAR (measured) = 23.5 W/kg

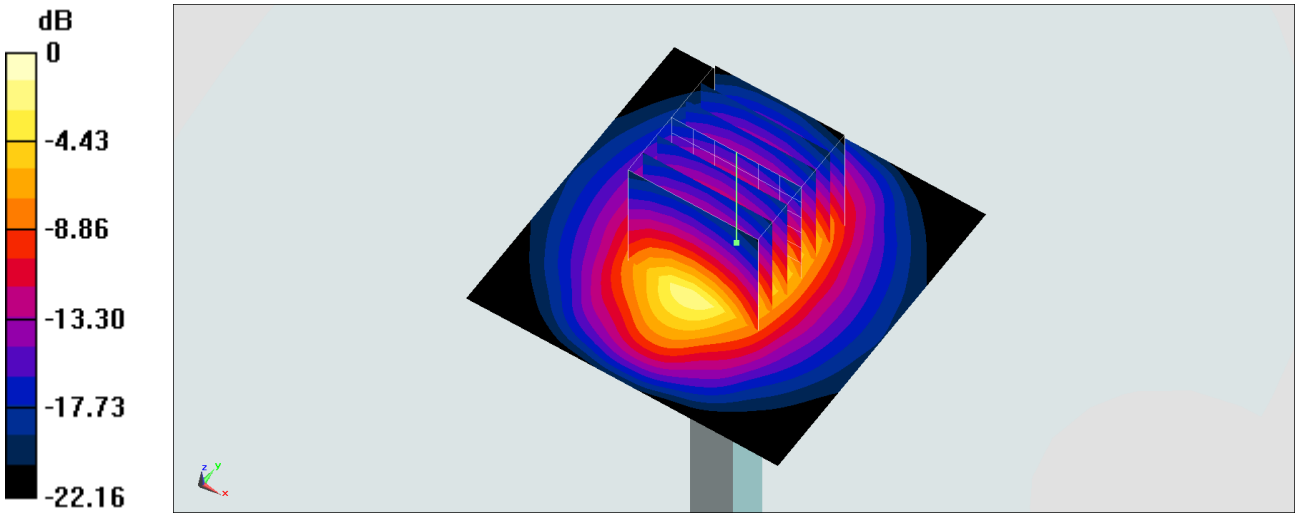

0 dB = 23.5 W/kg = 13.71 dBW/kg

System Check_Body_2450MHz

DUT: D2450V2-736

Communication System: CW; Frequency: 2450 MHz;Duty Cycle: 1:1
Medium: MSL_2450_180522 Medium parameters used: f = 2450 MHz; σ = 1.986 S/m; ε_r = 51.588; ρ = 1000 kg/m^3
Ambient Temperature：23.4 ℃; Liquid Temperature：22.4 ℃

DASY5 Configuration:
- Probe: EX3DV4 - SN3931; ConvF(7.69, 7.69, 7.69); Calibrated: 2017/9/29;
- Sensor-Surface: 1.4mm (Mechanical Surface Detection)
- Electronics: DAE3 Sn360; Calibrated: 2017/11/2
- Phantom: SAM LEFT; Type: QD000P40CD; Serial: TP:1718
- Measurement SW: DASY52, Version 52.10 (0);SEMCAD X Version 14.6.10 (7417)

Pin=250mW/Area Scan (61x61x1): Interpolated grid: dx=1.200 mm, dy=1.200 mm
Maximum value of SAR (interpolated) = 20.9 W/kg

Pin=250mW/Zoom Scan (7x7x7)/Cube 0: Measurement grid: dx=5mm, dy=5mm, dz=5mm
Reference Value = 107.4 V/m; Power Drift = -0.18 dB
Peak SAR (extrapolated) = 24.8 W/kg
SAR(1 g) = 12.4 W/kg; SAR(10 g) = 5.93 W/kg
Maximum value of SAR (measured) = 20.4 W/kg

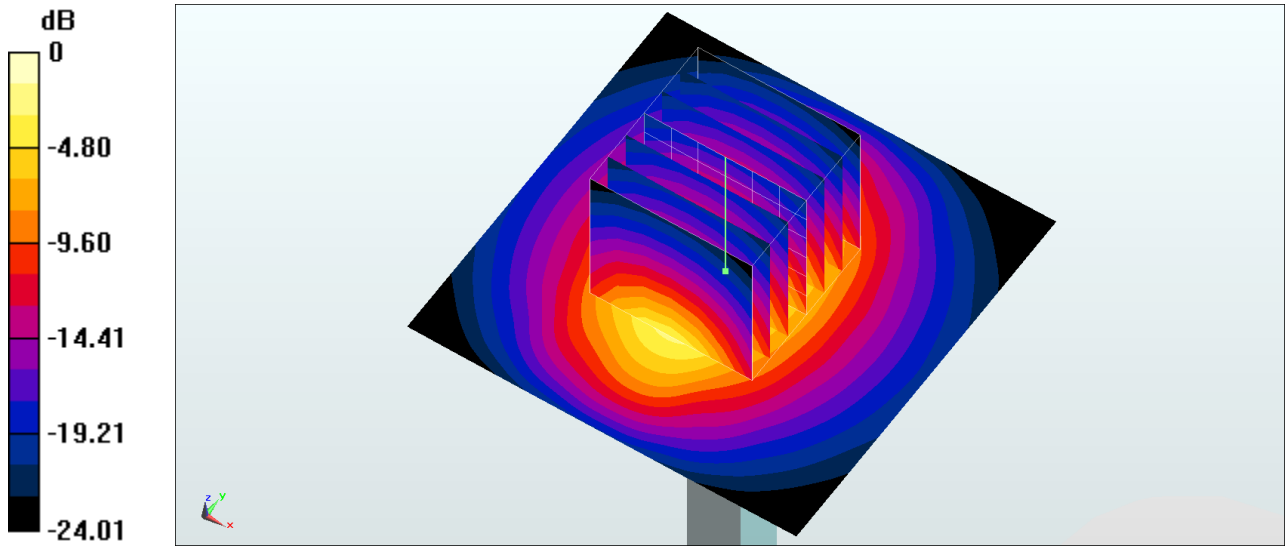

0 dB = 20.9 W/kg = 13.20 dBW/kg

System Check_Body_2450MHz

DUT: D2450V2-736

Communication System: CW ; Frequency: 2450 MHz;Duty Cycle: 1:1
Medium: MSL_2450_180529 Medium parameters used : f = 2450 MHz; σ = 2.029 S/m; ε_r = 53.424; ρ = 1000 kg/m^3
Ambient Temperature：23.2 ℃; Liquid Temperature：22.2 ℃

DASY5 Configuration:
- Probe: EX3DV4 - SN7346; ConvF(7.78, 7.78, 7.78); Calibrated: 2018/2/28
- Sensor-Surface: 1.4mm (Mechanical Surface Detection)
- Electronics: DAE4 Sn1399; Calibrated: 2017/11/16
- Phantom: SAM_Left; Type: QD000P40CD; Serial: TP:1815
- Measurement SW: DASY52, Version 52.10 (1);SEMCAD X Version 14.6.11 (7437)

Pin=250mW/Area Scan (61x61x1): Interpolated grid: dx=1.200 mm, dy=1.200 mm
Maximum value of SAR (interpolated) = 20.5 W/kg

Pin=250mW/Zoom Scan (7x7x7)/Cube 0: Measurement grid: dx=5mm, dy=5mm, dz=5mm
Reference Value = 103.9 V/m; Power Drift = 0.00 dB
Peak SAR (extrapolated) = 25.6 W/kg
SAR(1 g) = 12.8 W/kg; SAR(10 g) = 6.1 W/kg
Maximum value of SAR (measured) = 21.0 W/kg

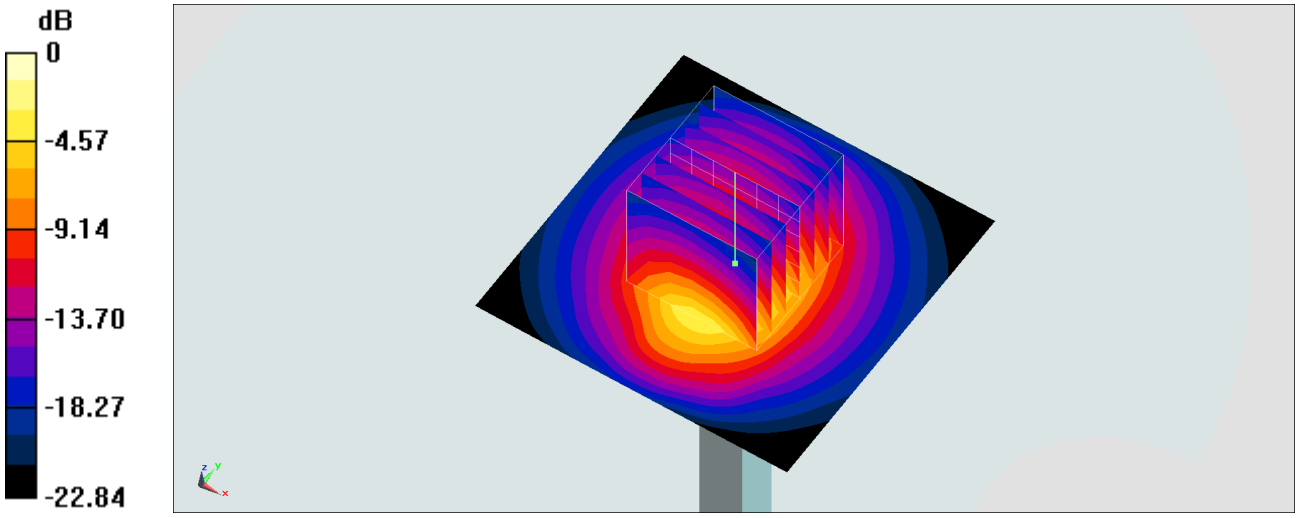

0 dB = 21.0 W/kg = 13.22 dBW/kg

System Check_Head_2600MHz

DUT: D2600V2-1008

Communication System: CW; Frequency: 2600 MHz;Duty Cycle: 1:1
Medium: HSL_2600_180530 Medium parameters used: f = 2600 MHz; σ = 2.016 S/m; ε_r = 38.106; ρ = 1000 kg/m^3
Ambient Temperature：23.5 ℃; Liquid Temperature：22.5 ℃

DASY5 Configuration:
- Probe: ES3DV3 - SN3270; ConvF(4.37, 4.37, 4.37); Calibrated: 2017/9/25
- Sensor-Surface: 3mm (Mechanical Surface Detection)
- Electronics: DAE4 Sn853; Calibrated: 2017/7/19
- Phantom: SAM_Left; Type: QD000P40CD; Serial: TP:1477
- Measurement SW: DASY52, Version 52.10 (1);SEMCAD X Version 14.6.11 (7439)

Pin=250mW/Area Scan (81x81x1): Interpolated grid: dx=1.200 mm, dy=1.200 mm
Maximum value of SAR (interpolated) = 20.4 W/kg

Pin=250mW/Zoom Scan (7x7x7)/Cube 0: Measurement grid: dx=5mm, dy=5mm, dz=5mm
Reference Value = 100.5 V/m; Power Drift = 0.07 dB
Peak SAR (extrapolated) = 32.8 W/kg
SAR(1 g) = 15.3 W/kg; SAR(10 g) = 6.87 W/kg
Maximum value of SAR (measured) = 20.5 W/kg

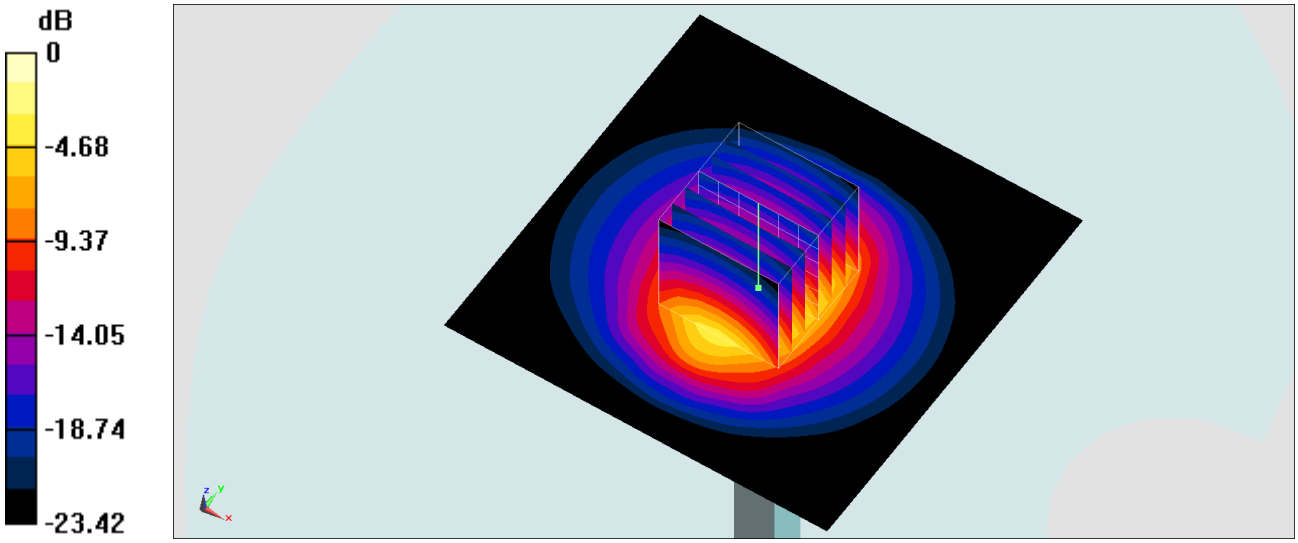

0 dB = 20.5 W/kg = 13.12 dBW/kg

System Check_Body_2600MHz

DUT: D2600V2-1008

Communication System: CW; Frequency: 2600 MHz;Duty Cycle: 1:1
Medium: MSL_2600_180529 Medium parameters used: f = 2600 MHz; σ = 2.213 S/m; ε_r = 51.938; ρ = 1000 kg/m^3
Ambient Temperature：23.0 ℃; Liquid Temperature：22.0 ℃

DASY5 Configuration:
- Probe: ES3DV3 - SN3270; ConvF(4.19, 4.19, 4.19); Calibrated: 2017/9/25
- Sensor-Surface: 3mm (Mechanical Surface Detection)
- Electronics: DAE4 Sn853; Calibrated: 2017/7/19
- Phantom: SAM_Right; Type: SAM; Serial: TP:1479
- Measurement SW: DASY52, Version 52.10 (1);SEMCAD X Version 14.6.11 (7439)

Pin=250mW/Area Scan (71x71x1): Interpolated grid: dx=1.200 mm, dy=1.200 mm
Maximum value of SAR (interpolated) = 19.5 W/kg

Pin=250mW/Zoom Scan (7x7x7)/Cube 0: Measurement grid: dx=5mm, dy=5mm, dz=5mm
Reference Value = 95.29 V/m; Power Drift = -0.05 dB
Peak SAR (extrapolated) = 29.9 W/kg
SAR(1 g) = 14.1 W/kg; SAR(10 g) = 6.27 W/kg
Maximum value of SAR (measured) = 18.7 W/kg

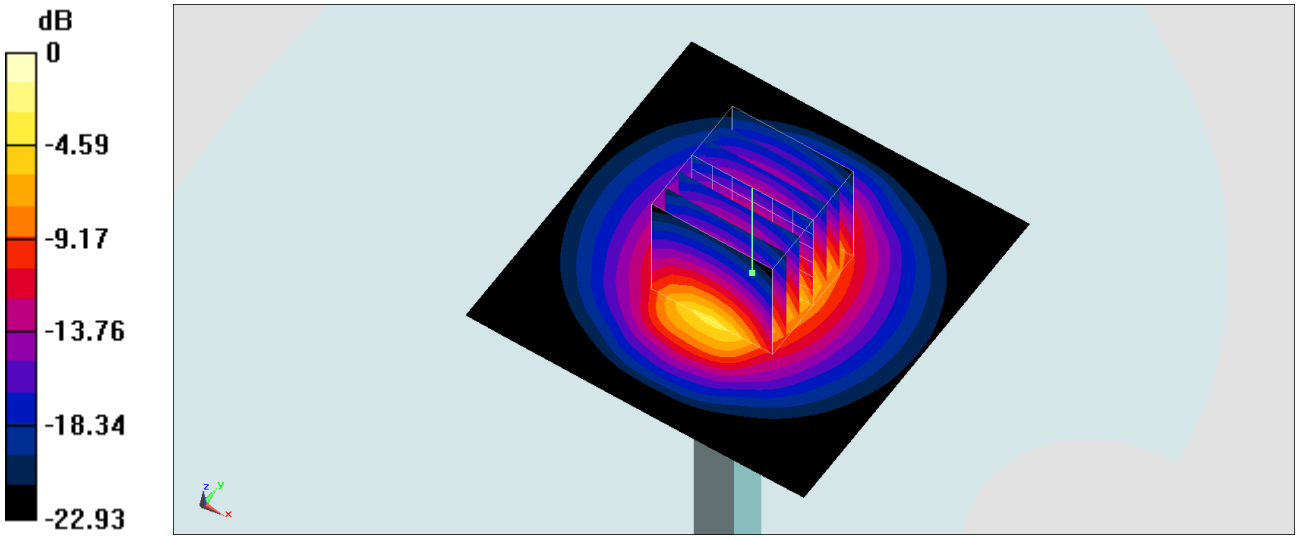

0 dB = 18.7 W/kg = 12.72 dBW/kg

System Check_Head_5250MHz

DUT: D5GHzV2-1006

Communication System: CW; Frequency: 5250 MHz;Duty Cycle: 1:1
Medium: HSL_5G_180521 Medium parameters used : f = 5250 MHz; σ = 4.577 S/m; ε_r = 36.912; ρ = 1000 kg/m^3
Ambient Temperature：23.6 ℃; Liquid Temperature：22.6 ℃

DASY5 Configuration:
- Probe: EX3DV4 - SN3931; ConvF(5.34, 5.34, 5.34); Calibrated: 2017/9/29;
- Sensor-Surface: 1.4mm (Mechanical Surface Detection)
- Electronics: DAE3 Sn360; Calibrated: 2017/11/2
- Phantom: SAM LEFT; Type: QD000P40CD; Serial: TP:1718
- Measurement SW: DASY52, Version 52.10 (0);SEMCAD X Version 14.6.10 (7417)

Pin=100mW/Area Scan (71x71x1): Interpolated grid: dx=1.000 mm, dy=1.000 mm
Maximum value of SAR (interpolated) = 21.5 W/kg

Pin=100mW/Zoom Scan (7x7x7)/Cube 0: Measurement grid: dx=4mm, dy=4mm, dz=1.4mm
Reference Value = 76.12 V/m; Power Drift = -0.12 dB
Peak SAR (extrapolated) = 34.6 W/kg
SAR(1 g) = 8.22 W/kg; SAR(10 g) = 2.26 W/kg
Maximum value of SAR (measured) = 20.5 W/kg

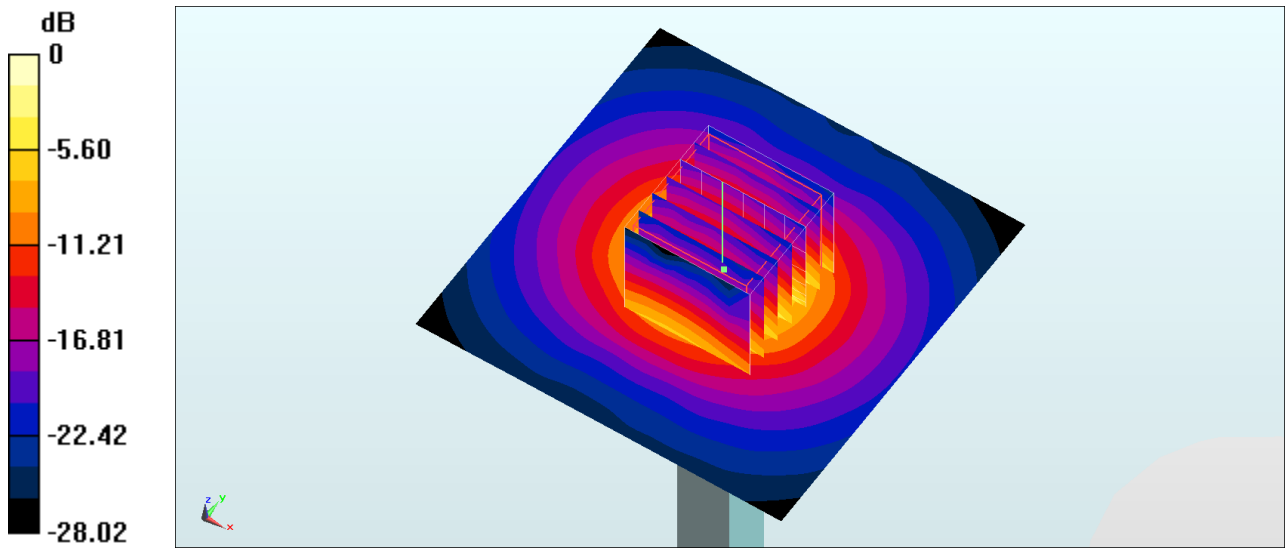

0 dB = 21.5 W/kg = 13.32 dBW/kg

System Check_Body_5250MHz

DUT: D5GHzV2-1006

Communication System: CW ; Frequency: 5250 MHz;Duty Cycle: 1:1
Medium: MSL_5G_180528 Medium parameters used : f = 5250 MHz; σ = 5.486 S/m; ε_r = 46.795; ρ = 1000 kg/m^3
Ambient Temperature：23.5 ℃; Liquid Temperature：22.5 ℃

DASY5 Configuration:
- Probe: EX3DV4 - SN7346; ConvF(5.06, 5.06, 5.06); Calibrated: 2018/2/28
- Sensor-Surface: 1.4mm (Mechanical Surface Detection)
- Electronics: DAE4 Sn1399; Calibrated: 2017/11/16
- Phantom: SAM_Left; Type: QD000P40CD; Serial: TP:1815
- Measurement SW: DASY52, Version 52.10 (1);SEMCAD X Version 14.6.11 (7437)

Pin=100mW/Area Scan (71x71x1): Interpolated grid: dx=1.000 mm, dy=1.000 mm
Maximum value of SAR (interpolated) = 17.3 W/kg

Pin=100mW/Zoom Scan (7x7x7)/Cube 0: Measurement grid: dx=4mm, dy=4mm, dz=1.4mm
Reference Value = 64.67 V/m; Power Drift = 0.10 dB
Peak SAR (extrapolated) = 29.2 W/kg
SAR(1 g) = 7.71 W/kg; SAR(10 g) = 2.17 W/kg
Maximum value of SAR (measured) = 18.2 W/kg

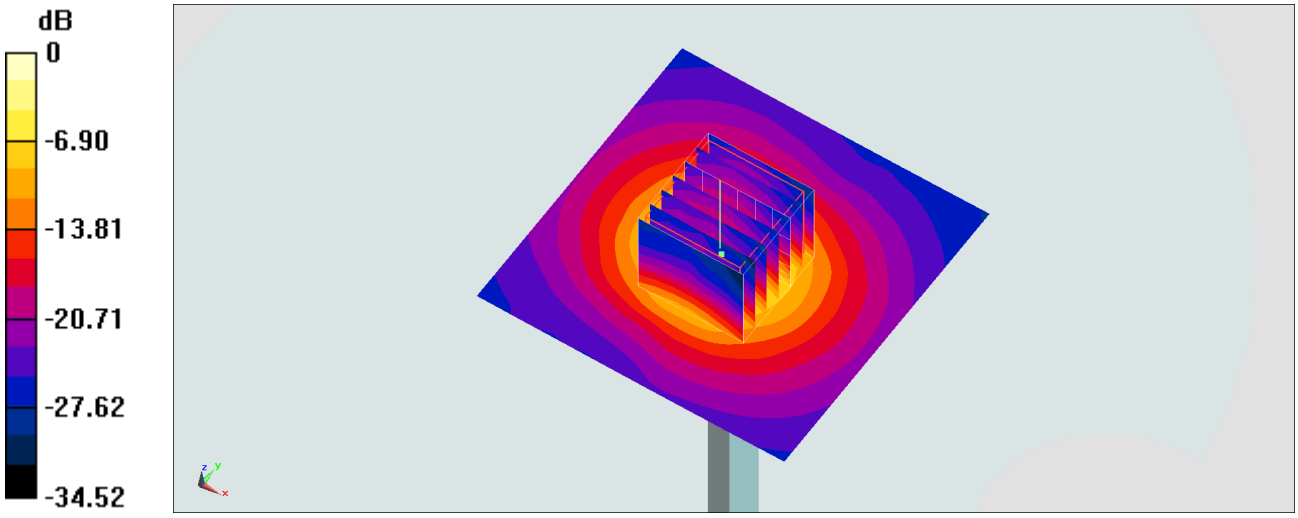

0 dB = 18.2 W/kg = 12.60 dBW/kg

System Check_Head_5600MHz

DUT: D5GHzV2-1006

Communication System: CW ; Frequency: 5600 MHz;Duty Cycle: 1:1
Medium: HSL_5G_180521 Medium parameters used: f = 5600 MHz; σ = 4.934 S/m; ε_r = 36.412; ρ = 1000 kg/m^3
Ambient Temperature：23.6 ℃; Liquid Temperature：22.6 ℃

DASY5 Configuration:
- Probe: EX3DV4 - SN3931; ConvF(4.47, 4.47, 4.47); Calibrated: 2017/9/29;
- Sensor-Surface: 1.4mm (Mechanical Surface Detection)
- Electronics: DAE3 Sn360; Calibrated: 2017/11/2
- Phantom: SAM LEFT; Type: QD000P40CD; Serial: TP:1718
- Measurement SW: DASY52, Version 52.10 (0);SEMCAD X Version 14.6.10 (7417)

Pin=100mW/Area Scan (71x71x1): Interpolated grid: dx=1.000 mm, dy=1.000 mm
Maximum value of SAR (interpolated) = 22.3 W/kg

Pin=100mW/Zoom Scan (7x7x7)/Cube 0: Measurement grid: dx=4mm, dy=4mm, dz=1.4mm
Reference Value = 74.85 V/m; Power Drift = -0.18 dB
Peak SAR (extrapolated) = 41.1 W/kg
SAR(1 g) = 8.94 W/kg; SAR(10 g) = 2.44 W/kg
Maximum value of SAR (measured) = 23.0 W/kg

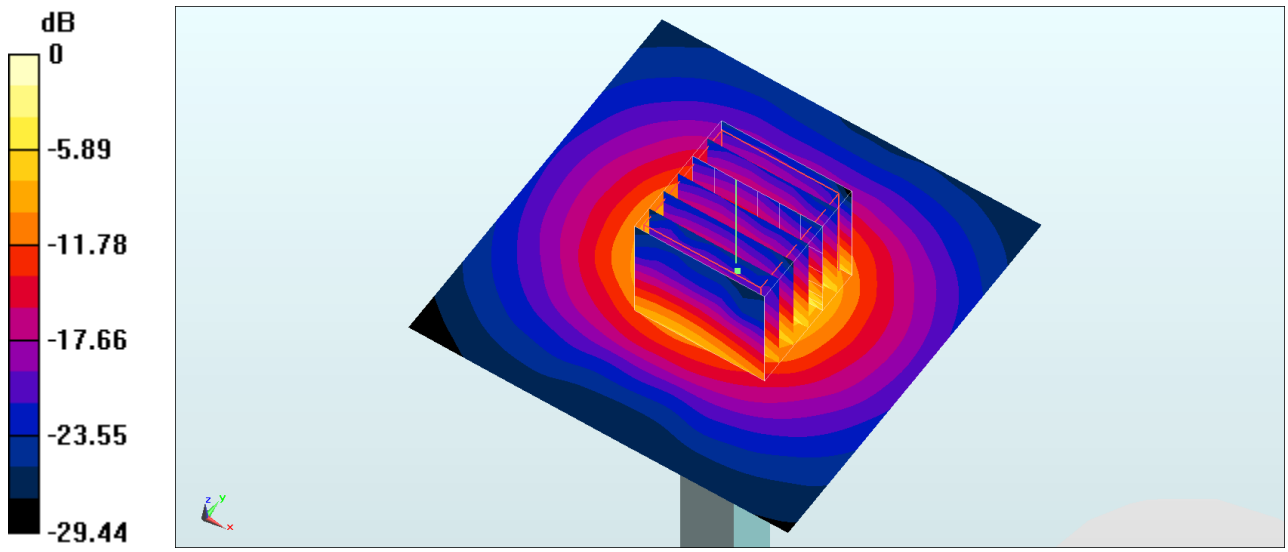

0 dB = 22.3 W/kg = 13.48 dBW/kg

System Check_Body_5600MHz

DUT: D5GHzV2-1006

Communication System: CW ; Frequency: 5600 MHz;Duty Cycle: 1:1
Medium: MSL_5G_180528 Medium parameters used: f = 5600 MHz; σ = 5.946 S/m; ε_r = 46.178; ρ = 1000 kg/m^3
Ambient Temperature：23.5 ℃; Liquid Temperature：22.5 ℃

DASY5 Configuration:
- Probe: EX3DV4 - SN7346; ConvF(4.35, 4.35, 4.35); Calibrated: 2018/2/28
- Sensor-Surface: 1.4mm (Mechanical Surface Detection)
- Electronics: DAE4 Sn1399; Calibrated: 2017/11/16
- Phantom: SAM_Left; Type: QD000P40CD; Serial: TP:1815
- Measurement SW: DASY52, Version 52.10 (1);SEMCAD X Version 14.6.11 (7437)

Pin=100mW/Area Scan (71x71x1): Interpolated grid: dx=1.000 mm, dy=1.000 mm
Maximum value of SAR (interpolated) = 20.7 W/kg

Pin=100mW/Zoom Scan (7x7x7)/Cube 0: Measurement grid: dx=4mm, dy=4mm, dz=1.4mm
Reference Value = 67.59 V/m; Power Drift = 0.06 dB
Peak SAR (extrapolated) = 34.9 W/kg
SAR(1 g) = 8.43 W/kg; SAR(10 g) = 2.33 W/kg
Maximum value of SAR (measured) = 20.5 W/kg

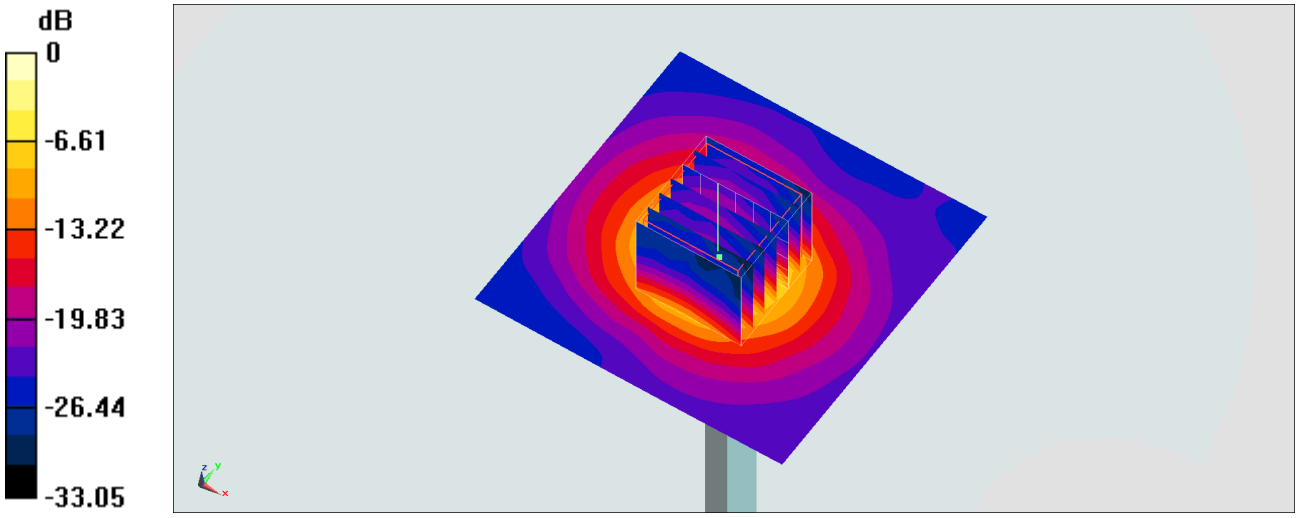

0 dB = 20.5 W/kg = 13.12 dBW/kg

System Check_Head_5750MHz

DUT: D5GHzV2-1006

Communication System: CW ; Frequency: 5750 MHz;Duty Cycle: 1:1
Medium: HSL_5G_180521 Medium parameters used: f = 5750 MHz; σ = 5.093 S/m; ε_r = 36.204; ρ = 1000 kg/m^3
Ambient Temperature：23.6 ℃; Liquid Temperature：22.6 ℃

DASY5 Configuration:
- Probe: EX3DV4 - SN3931; ConvF(4.95, 4.95, 4.95); Calibrated: 2017/9/29;
- Sensor-Surface: 1.4mm (Mechanical Surface Detection)
- Electronics: DAE3 Sn360; Calibrated: 2017/11/2
- Phantom: SAM LEFT; Type: QD000P40CD; Serial: TP:1718
- Measurement SW: DASY52, Version 52.10 (0);SEMCAD X Version 14.6.10 (7417)

Pin=100mW/Area Scan (71x71x1): Interpolated grid: dx=1.000 mm, dy=1.000 mm
Maximum value of SAR (interpolated) = 19.8 W/kg

Pin=100mW/Zoom Scan (7x7x7)/Cube 0: Measurement grid: dx=4mm, dy=4mm, dz=1.4mm
Reference Value = 67.57 V/m; Power Drift = 0.10 dB
Peak SAR (extrapolated) = 33.4 W/kg
SAR(1 g) = 7.71 W/kg; SAR(10 g) = 2.11 W/kg
Maximum value of SAR (measured) = 19.5 W/kg

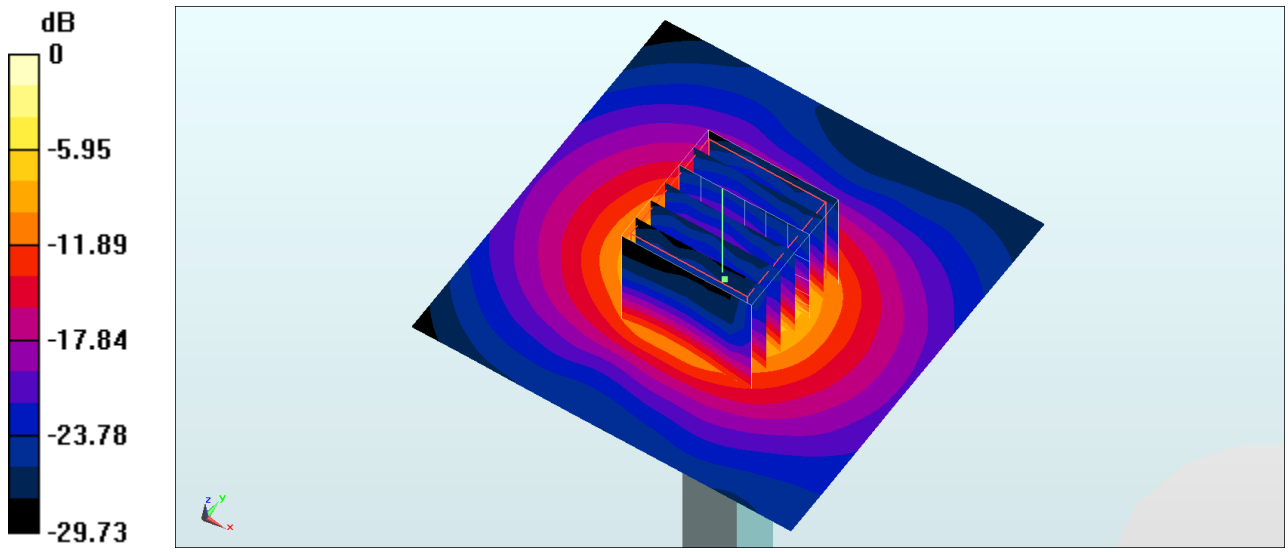

0 dB = 19.8 W/kg = 12.97 dBW/kg

System Check_Body_5750MHz

DUT: D5GHzV2-1006

Communication System: CW; Frequency: 5750 MHz;Duty Cycle: 1:1
Medium: MSL_5G_180528 Medium parameters used: f = 5750 MHz; σ = 6.158 S/m; ε_r = 46.021; ρ = 1000 kg/m^3
Ambient Temperature：23.5 ℃; Liquid Temperature：22.5 ℃

DASY5 Configuration:
- Probe: EX3DV4 - SN7346; ConvF(4.52, 4.52, 4.52); Calibrated: 2018/2/28
- Sensor-Surface: 1.4mm (Mechanical Surface Detection)
- Electronics: DAE4 Sn1399; Calibrated: 2017/11/16
- Phantom: SAM_Left; Type: QD000P40CD; Serial: TP:1815
- Measurement SW: DASY52, Version 52.10 (1);SEMCAD X Version 14.6.11 (7437)

Pin=100mW/Area Scan (71x71x1): Interpolated grid: dx=1.000 mm, dy=1.000 mm
Maximum value of SAR (interpolated) = 18.7 W/kg

Pin=100mW/Zoom Scan (7x7x7)/Cube 0: Measurement grid: dx=4mm, dy=4mm, dz=1.4mm
Reference Value = 63.98 V/m; Power Drift = -0.02 dB
Peak SAR (extrapolated) = 33.1 W/kg
SAR(1 g) = 7.58 W/kg; SAR(10 g) = 2.1 W/kg
Maximum value of SAR (measured) = 18.9 W/kg

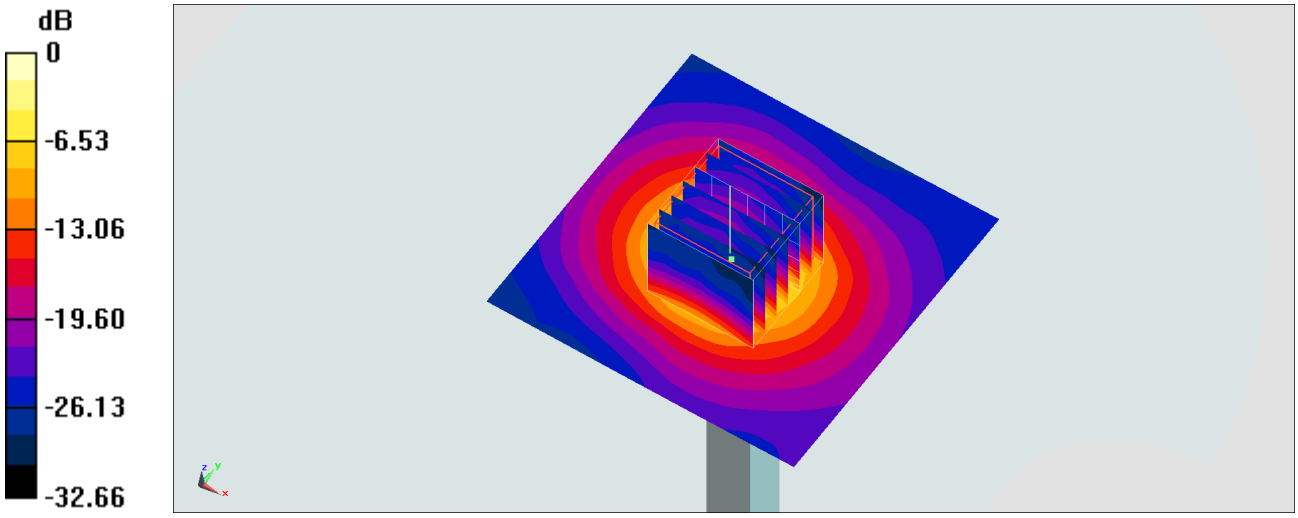

0 dB = 18.9 W/kg = 12.76 dBW/kg