SETUP PHOTO EXHIBIT

Report Number: R15103618-EP11

Applicant	:	Sony Corporation 1-7-1 Konan Minato-ku Tokyo, 108-0075, Japan
FCC ID	:	PY7-46195Y
EUT Description	:	LTE/5G Portable Data Transmitter with BT, DTS/UNII a/b/g/n/ac/ax and GPS
Test Standard(s)	:	FCC 47 CFR Part 15 Subpart B

Date Of Issue:
2024-03-01

Prepared by:
UL LLC
12 Laboratory Dr.
Research Triangle Park, NC 27709 U.S.A.
TEL: (919) 549-1400

CERT #0751.06

REPORT REVISION HISTORY

Rev.	Issue Date	Revisions	Revised By
v1	2024-03-01	Initial Issue	Brian Kiewra

UL LLC
12 Laboratory Dr., RTP, NC 27709; USA TEL: (919) 549-1400
This report shall not be reproduced except in full, without the written approval of UL LLC

TABLE OF CONTENTS

REPORT REVISION HISTORY 2

TABLE OF CONTENTS 3

1. SETUP DIAGRAMS 4

2. SETUP PHOTOS 5

END OF TEST REPORT 10

UL LLC
12 Laboratory Dr., RTP, NC 27709; USA TEL: (919) 549-1400

This report shall not be reproduced except in full, without the written approval of UL LLC

1. SETUP DIAGRAMS

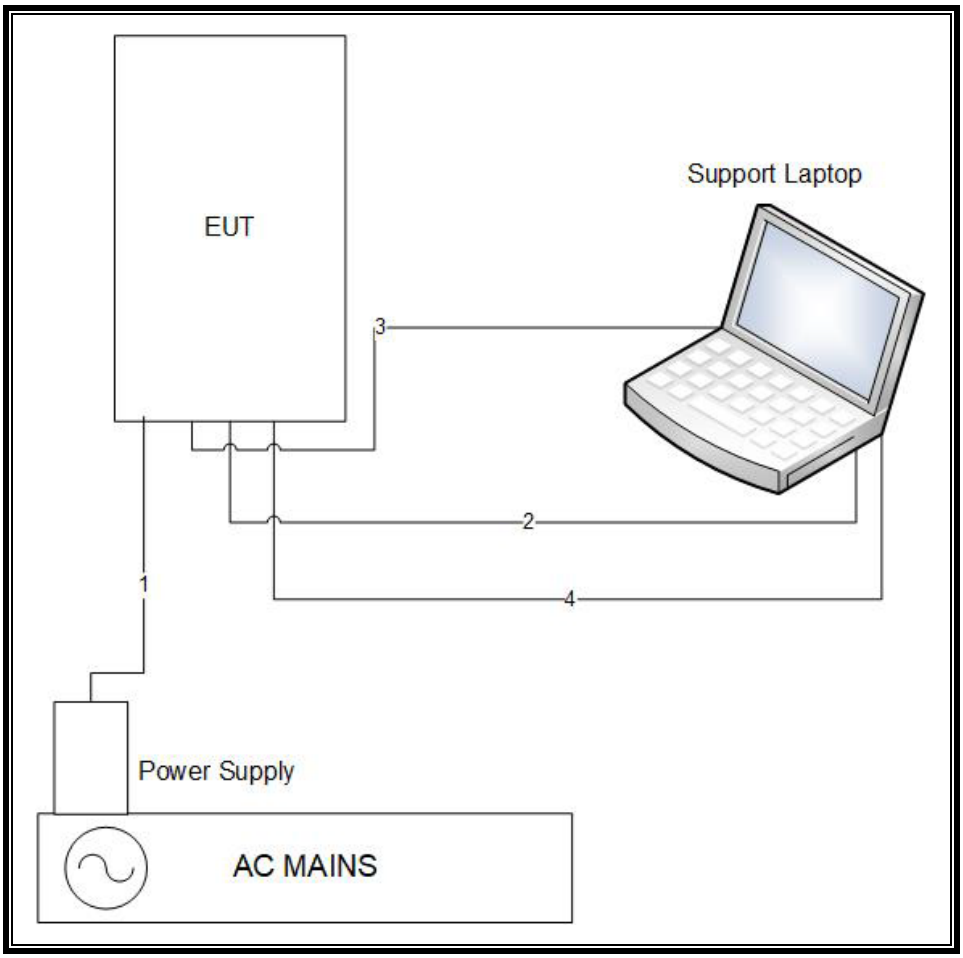

UL LLC
12 Laboratory Dr., RTP, NC 27709; USA TEL: (919) 549-1400
This report shall not be reproduced except in full, without the written approval of UL LLC

2. SETUP PHOTOS

AC MAINS LINE CONDUCTED EMISSIONS MEASUREMENT SETUP

AC MAINS SETUP FOR ENET, USB 2.0, USB 3.1

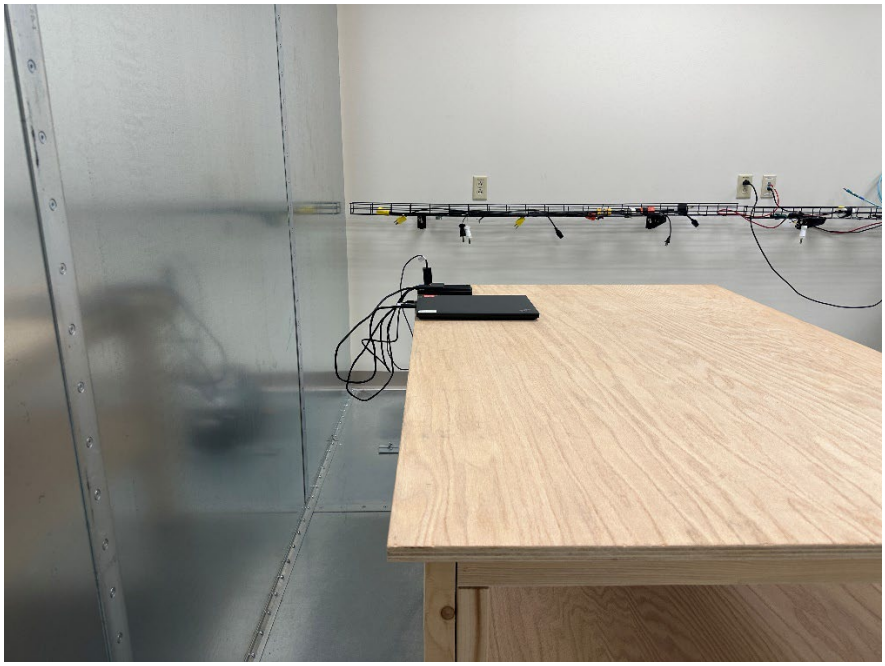

UL LLC
12 Laboratory Dr., RTP, NC 27709; USA TEL: (919) 549-1400
This report shall not be reproduced except in full, without the written approval of UL LLC

AC MAINS SETUP FOR HDMI

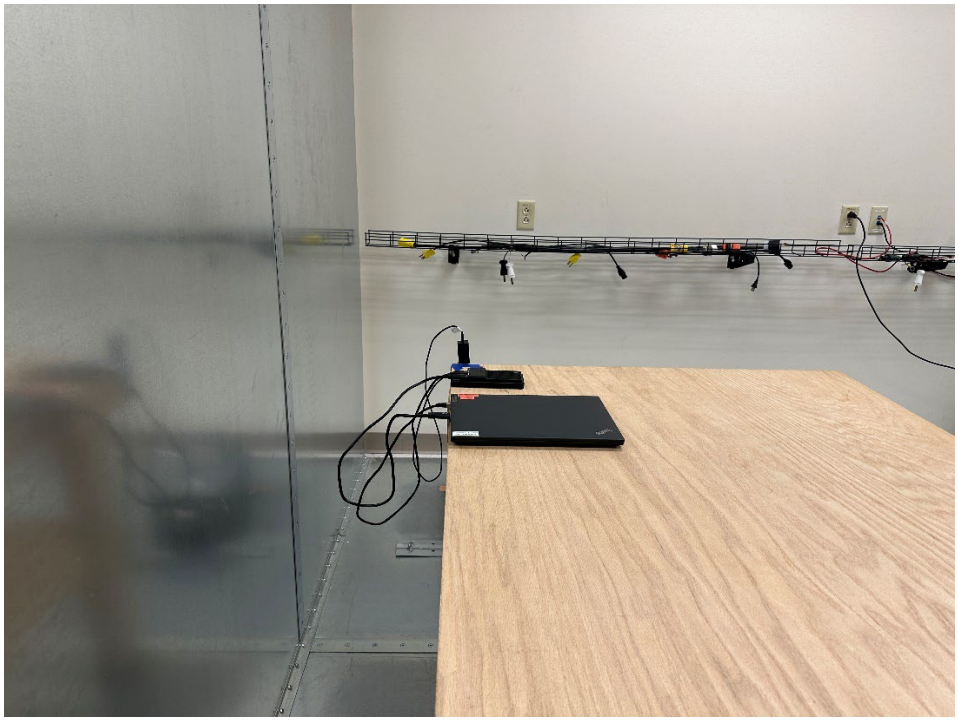

UL LLC
12 Laboratory Dr., RTP, NC 27709; USA TEL: (919) 549-1400
This report shall not be reproduced except in full, without the written approval of UL LLC

RADIATED RF MEASUREMENT SETUP

<1GHz SETUP

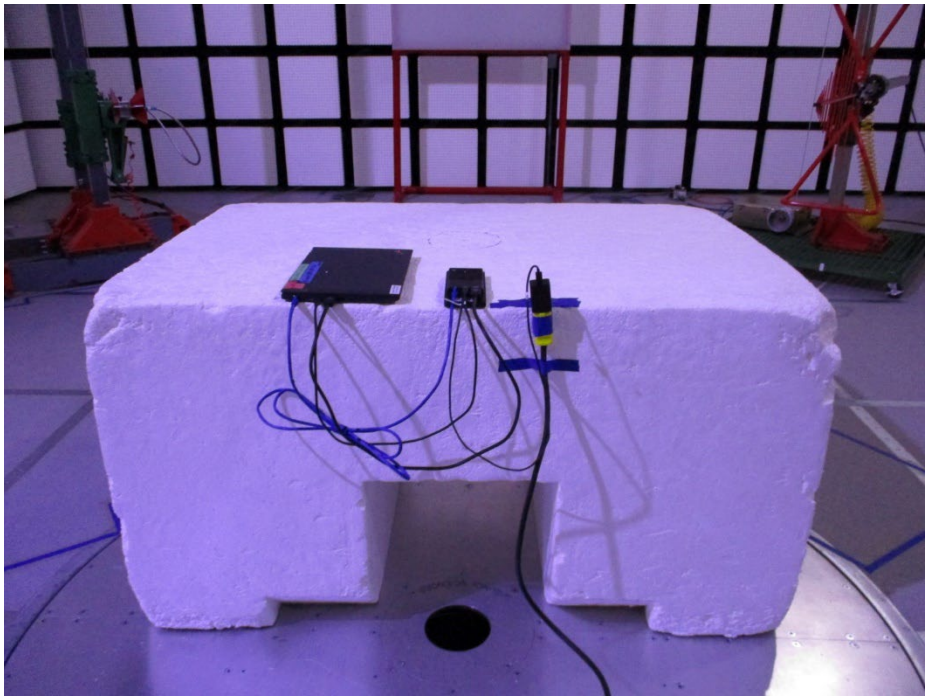

UL LLC
12 Laboratory Dr., RTP, NC 27709; USA TEL: (919) 549-1400
This report shall not be reproduced except in full, without the written approval of UL LLC

>1GHz SETUP

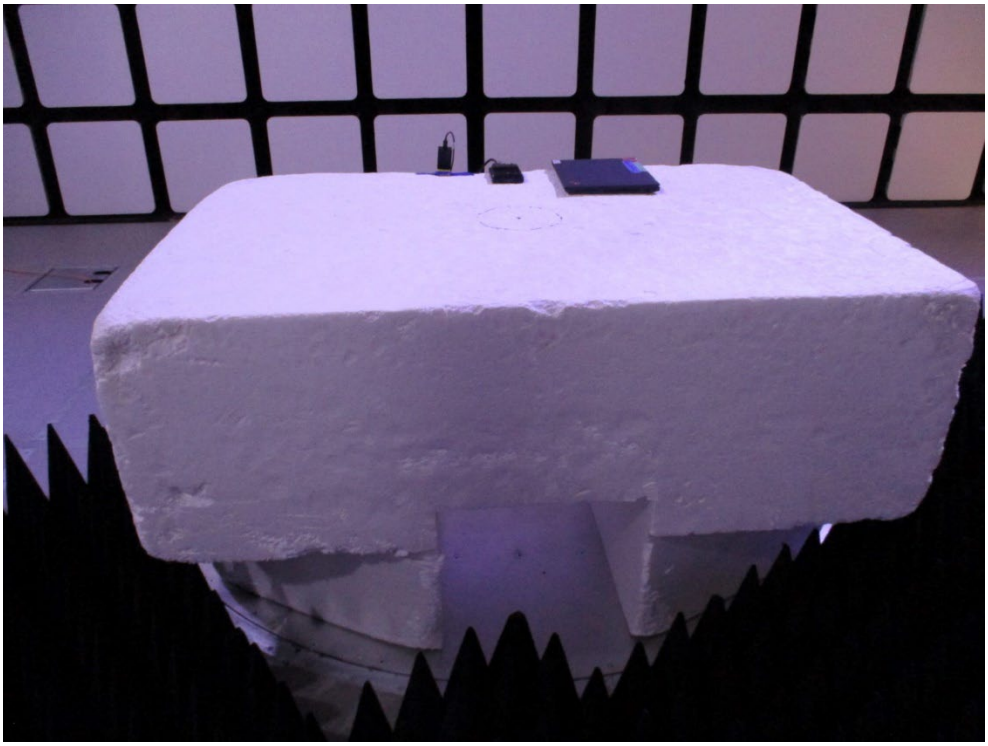

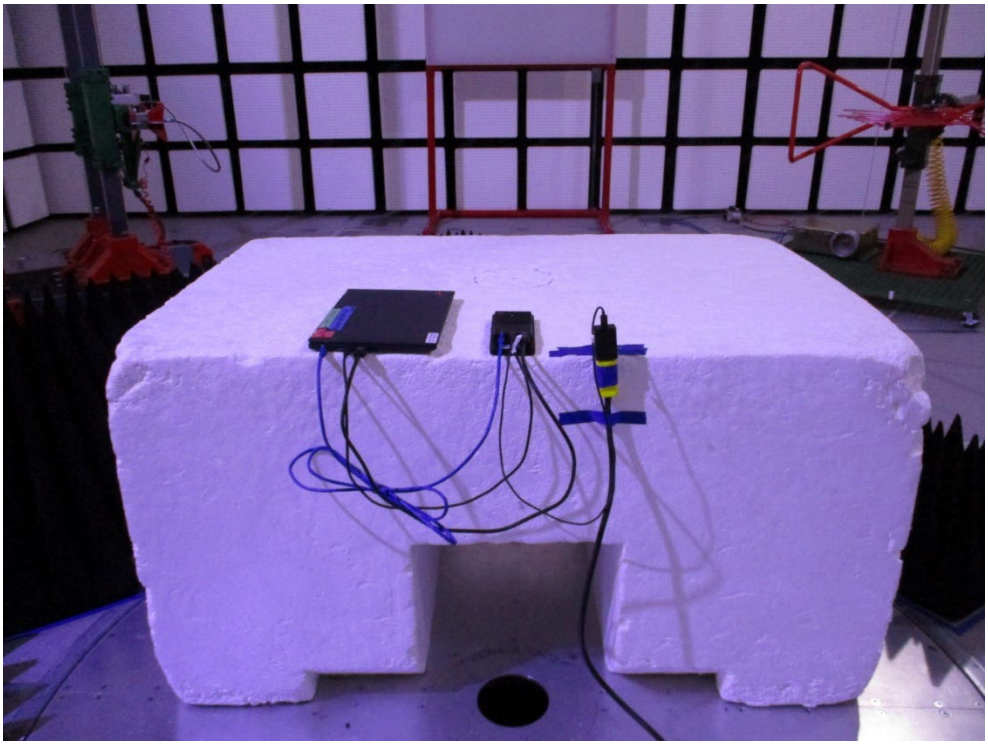

UL LLC
12 Laboratory Dr., RTP, NC 27709; USA TEL: (919) 549-1400
This report shall not be reproduced except in full, without the written approval of UL LLC

XYZ SETUP PHOTOS

X AXIS

Y AXIS

UL LLC
12 Laboratory Dr., RTP, NC 27709; USA TEL: (919) 549-1400
This report shall not be reproduced except in full, without the written approval of UL LLC

Z AXIS

END OF TEST REPORT

UL LLC
12 Laboratory Dr., RTP, NC 27709; USA TEL: (919) 549-1400
This report shall not be reproduced except in full, without the written approval of UL LLC