System Check_Head_1750MHz

DUT: D1750V2-1112

Communication System: CW; Frequency: 1750 MHz;Duty Cycle: 1:1
Medium: HSL_1750_200824 Medium parameters used: f = 1750 MHz; σ = 1.399 S/m; ε_r = 40.569; ρ = 1000 kg/m^3
Ambient Temperature：23.7 ℃; Liquid Temperature：22.7 ℃

DASY5 Configuration:
- Probe: ES3DV3 - SN3184; ConvF(5.45, 5.45, 5.45) @ 1750 MHz; Calibrated: 2019/9/25
- Sensor-Surface: 3mm (Mechanical Surface Detection)
- Electronics: DAE4 Sn916; Calibrated: 2019/12/17
- Phantom: SAM_Left; Type: QD000P40CD; Serial: TP:1684
- Measurement SW: DASY52, Version 52.10 (4);SEMCAD X Version 14.6.14 (7483)

Pin=250mW/Area Scan (61x61x1): Interpolated grid: dx=1.500 mm, dy=1.500 mm
Maximum value of SAR (interpolated) = 11.7 W/kg

Pin=250mW/Zoom Scan (5x5x7)/Cube 0: Measurement grid: dx=8mm, dy=8mm, dz=5mm
Reference Value = 89.30 V/m; Power Drift = 0.14 dB
Peak SAR (extrapolated) = 16.1 W/kg
SAR(1 g) = 8.99 W/kg; SAR(10 g) = 4.79 W/kg
Maximum value of SAR (measured) = 11.3 W/kg

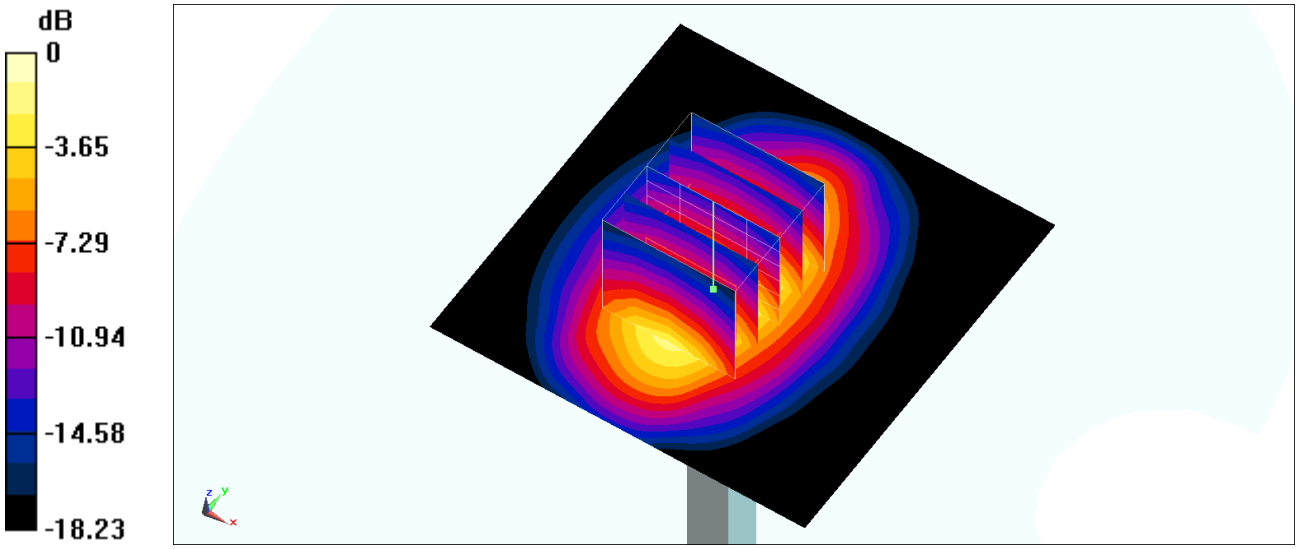

0 dB = 11.3 W/kg = 10.53 dBW/kg

System Check_Head_1900MHz

DUT: D1900V2-5d041

Communication System: CW; Frequency: 1900 MHz;Duty Cycle: 1:1
Medium: HSL_1900_200824 Medium parameters used: f = 1900 MHz; σ = 1.426 S/m; ε_r = 40.518; ρ = 1000 kg/m^3
Ambient Temperature：23.7 ℃; Liquid Temperature：22.7 ℃

DASY5 Configuration:
- Probe: ES3DV3 - SN3184; ConvF(5.23, 5.23, 5.23) @ 1900 MHz; Calibrated: 2019/9/25
- Sensor-Surface: 3mm (Mechanical Surface Detection)
- Electronics: DAE4 Sn916; Calibrated: 2019/12/17
- Phantom: SAM_Left; Type: QD000P40CD; Serial: TP:1684
- Measurement SW: DASY52, Version 52.10 (4);SEMCAD X Version 14.6.14 (7483)

Pin=250mW/Area Scan (61x61x1): Interpolated grid: dx=1.500 mm, dy=1.500 mm
Maximum value of SAR (interpolated) = 13.5 W/kg

Pin=250mW/Zoom Scan (5x5x7)/Cube 0: Measurement grid: dx=8mm, dy=8mm, dz=5mm
Reference Value = 88.32 V/m; Power Drift = -0.15 dB
Peak SAR (extrapolated) = 16.2 W/kg
SAR(1 g) = 9.67 W/kg; SAR(10 g) = 5.17 W/kg
Maximum value of SAR (measured) = 11.0 W/kg

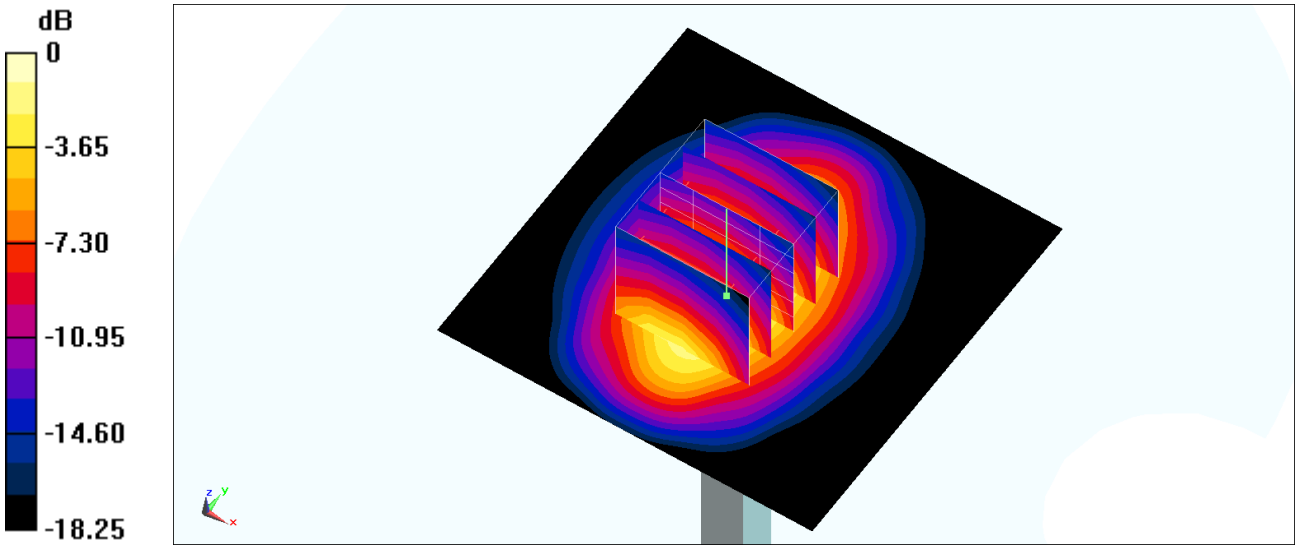

0 dB = 11.0 W/kg = 10.41 dBW/kg

System Check_Head_2450MHz

DUT: D2450V2-929

Communication System: CW ; Frequency: 2450 MHz;Duty Cycle: 1:1
Medium: HSL_2450_200915 Medium parameters used : f = 2450 MHz; σ = 1.852 S/m; ε_r = 39.332; ρ = 1000 kg/m^3
Ambient Temperature：23.3 ℃; Liquid Temperature：22.3 ℃

DASY5 Configuration:
- Probe: ES3DV3 - SN3071; ConvF(4.33, 4.33, 4.33) @ 2450 MHz; Calibrated: 2019/12/18
- Sensor-Surface: 3mm (Mechanical Surface Detection)
- Electronics: DAE4 Sn916; Calibrated: 2019/12/17
- Phantom: SAM_Left; Type: QD000P40CD; Serial: TP:1684
- Measurement SW: DASY52, Version 52.10 (4);SEMCAD X Version 14.6.14 (7483)

Pin=250mW/Area Scan (71x71x1): Interpolated grid: dx=1.200 mm, dy=1.200 mm
Maximum value of SAR (interpolated) = 16.7 W/kg

Pin=250mW/Zoom Scan (7x7x7)/Cube 0: Measurement grid: dx=5mm, dy=5mm, dz=5mm
Reference Value = 97.95 V/m; Power Drift = -0.07 dB
Peak SAR (extrapolated) = 24.8 W/kg
SAR(1 g) = 12.4 W/kg; SAR(10 g) = 5.78 W/kg
Maximum value of SAR (measured) = 16.2 W/kg

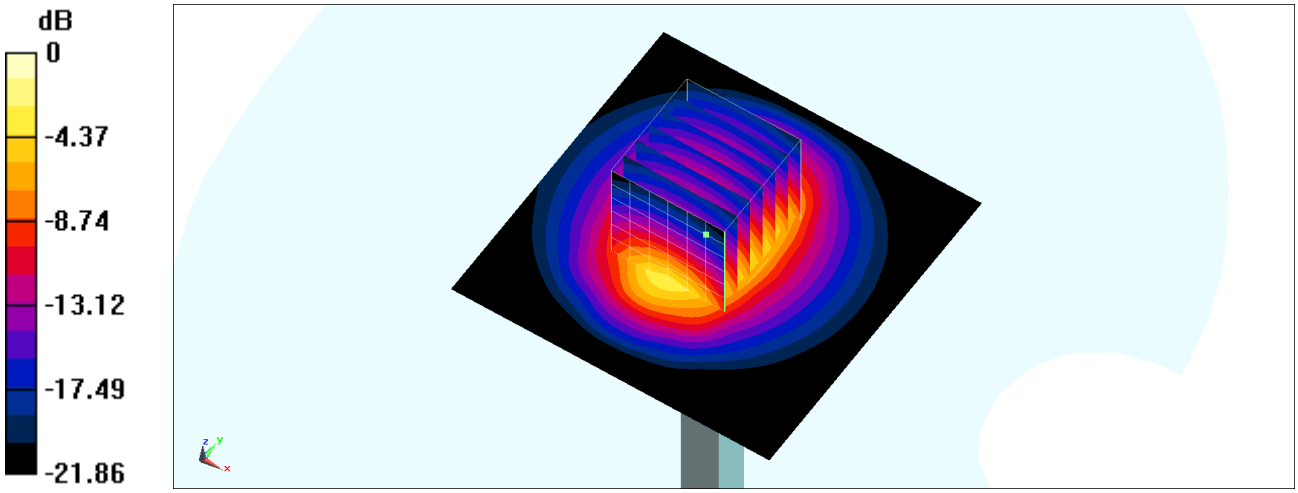

0 dB = 16.2 W/kg = 12.10 dBW/kg

Test Laboratory: Sporton International Inc. SAR/HAC Testing Lab Date: 2020/9/17

System Check_Head_2450MHz

DUT: D2450V2-929

Communication System: CW; Frequency: 2450 MHz;Duty Cycle: 1:1
Medium: HSL_2450_200917 Medium parameters used: f = 2450 MHz; σ = 1.842 S/m; ε_r = 38.777; ρ = 1000 kg/m^3
Ambient Temperature：23.4 ℃; Liquid Temperature：22.4 ℃

DASY5 Configuration:
- Probe: EX3DV4 - SN7306; ConvF(7.47, 7.47, 7.47) @ 2450 MHz; Calibrated: 2020/7/24
- Sensor-Surface: 1.4mm (Mechanical Surface Detection)
- Electronics: DAE4 Sn1399; Calibrated: 2020/2/18
- Phantom: SAM_Left; Type: SAM; Serial: 1796
- Measurement SW: DASY52, Version 52.10 (4);SEMCAD X Version 14.6.14 (7483)

Pin=250mW/Area Scan (81x81x1): Interpolated grid: dx=1.200 mm, dy=1.200 mm
Maximum value of SAR (interpolated) = 26.7 W/kg

Pin=250mW/Zoom Scan (7x7x7)/Cube 0: Measurement grid: dx=5mm, dy=5mm, dz=5mm
Reference Value = 116.0 V/m; Power Drift = 0.03 dB
Peak SAR (extrapolated) = 30.5 W/kg
SAR(1 g) = 14.2 W/kg; SAR(10 g) = 6.55 W/kg
Maximum value of SAR (measured) = 24.1 W/kg

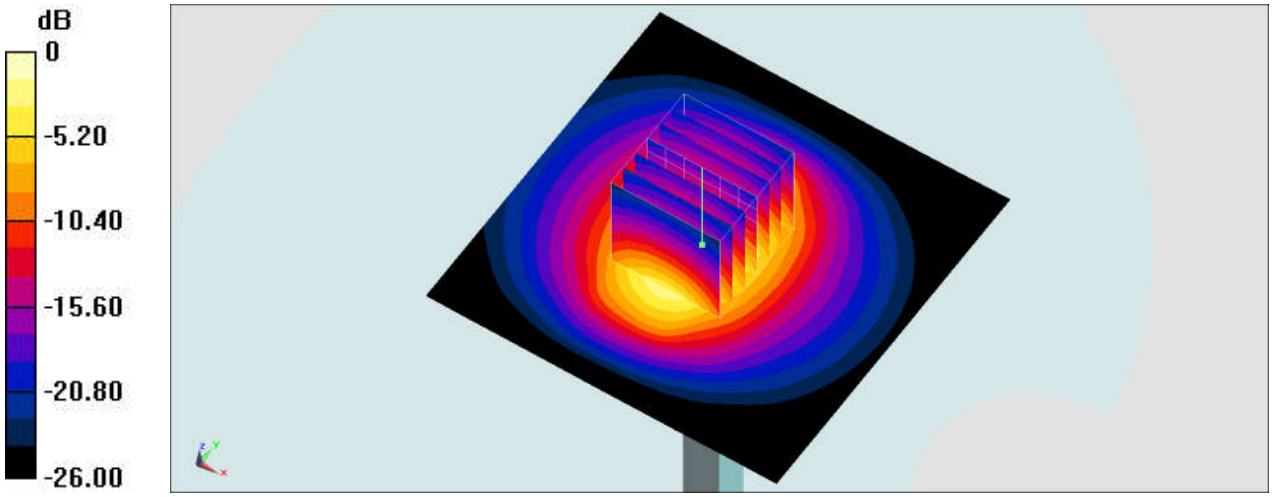

0 dB = 24.1 W/kg = 13.82 dBW/kg

System Check_Head_5250MHz

DUT: D5GHzV2-1006

Communication System: CW; Frequency: 5250 MHz;Duty Cycle: 1:1
Medium: HSL_5G_200915 Medium parameters used: f = 5250 MHz; σ = 4.682 S/m; ε_r = 36.107; ρ = 1000 kg/m^3
Ambient Temperature：23.1 ℃; Liquid Temperature：22.1 ℃

DASY5 Configuration:
- Probe: EX3DV4 - SN7515; ConvF(5.38, 5.38, 5.38) @ 5250 MHz; Calibrated: 2019/10/22
- Sensor-Surface: 1.4mm (Mechanical Surface Detection)
- Electronics: DAE4 Sn376; Calibrated: 2019/12/6
- Phantom: SAM_Right; Type: SAM; Serial: TP:1681
- Measurement SW: DASY52, Version 52.10 (4);SEMCAD X Version 14.6.14 (7483)

Pin=100mW/Area Scan (71x71x1): Interpolated grid: dx=1.000 mm, dy=1.000 mm
Maximum value of SAR (interpolated) = 18.1 W/kg

Pin=100mW/Zoom Scan (7x7x7)/Cube 0: Measurement grid: dx=4mm, dy=4mm, dz=1.4mm
Reference Value = 70.59 V/m; Power Drift = 0.07 dB
Peak SAR (extrapolated) = 30.0 W/kg
SAR(1 g) = 7.55 W/kg; SAR(10 g) = 2.11 W/kg
Maximum value of SAR (measured) = 18.6 W/kg

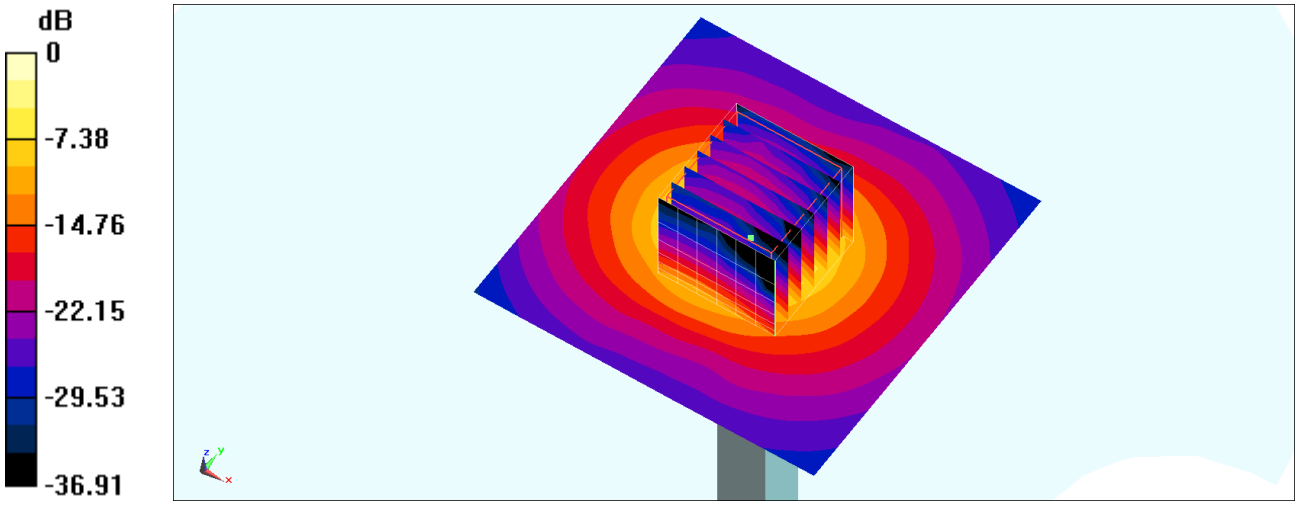

0 dB = 18.6 W/kg = 12.70 dBW/kg

System Check_Head_5250MHz

DUT: D5GHzV2-1128

Communication System: CW ; Frequency: 5250 MHz;Duty Cycle: 1:1
Medium: HSL_5G_200916 Medium parameters used : f = 5250 MHz; σ = 4.653 S/m; ε_r = 35.731; ρ = 1000 kg/m^3
Ambient Temperature：23.1 ℃; Liquid Temperature：22.1 ℃

DASY5 Configuration:
- Probe: EX3DV4 - SN7515; ConvF(5.38, 5.38, 5.38) @ 5250 MHz; Calibrated: 2019/10/22
- Sensor-Surface: 1.4mm (Mechanical Surface Detection)
- Electronics: DAE4 Sn376; Calibrated: 2019/12/6
- Phantom: SAM_Right; Type: SAM; Serial: TP:1681
- Measurement SW: DASY52, Version 52.10 (4);SEMCAD X Version 14.6.14 (7483)

Pin=100mW/Area Scan (71x71x1): Interpolated grid: dx=1.000 mm, dy=1.000 mm
Maximum value of SAR (interpolated) = 18.0 W/kg

Pin=100mW/Zoom Scan (7x7x7)/Cube 0: Measurement grid: dx=4mm, dy=4mm, dz=1.4mm
Reference Value = 69.40 V/m; Power Drift = 0.07 dB
Peak SAR (extrapolated) = 30.7 W/kg
SAR(1 g) = 7.74 W/kg; SAR(10 g) = 2.16 W/kg
Maximum value of SAR (measured) = 19.0 W/kg

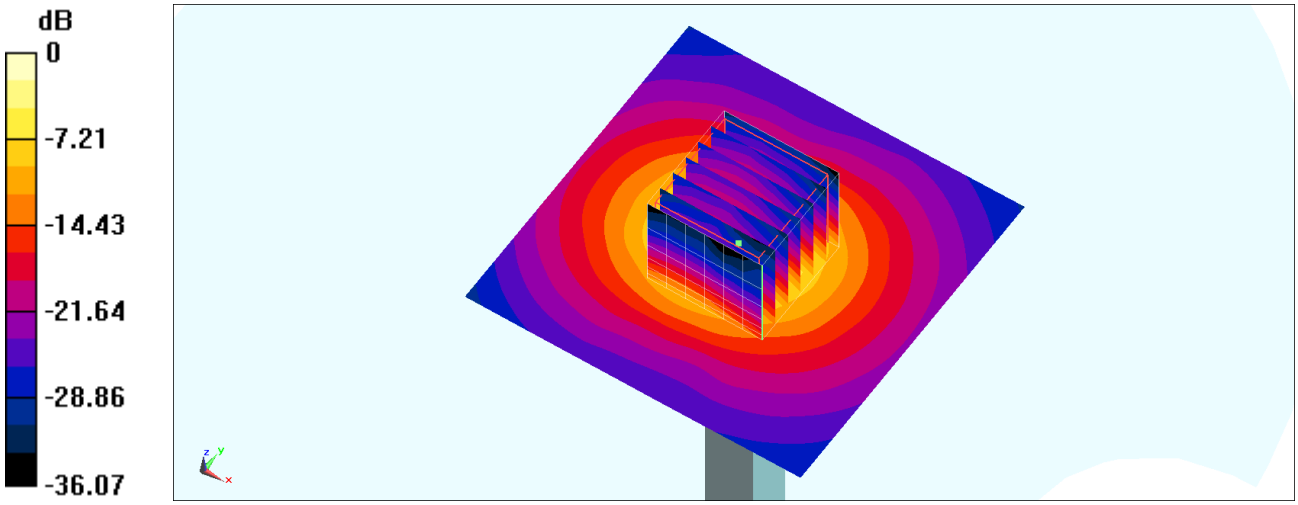

0 dB = 19.0 W/kg = 12.79 dBW/kg

System Check_Head_5250MHz

DUT: D5GHzV2-1006

Communication System: CW; Frequency: 5250 MHz;Duty Cycle: 1:1
Medium: HSL_5G_200917 Medium parameters used : f = 5250 MHz; σ = 4.77 S/m; ε_r = 36.909; ρ = 1000 kg/m^3
Ambient Temperature：23.7 ℃; Liquid Temperature：22.7 ℃

DASY5 Configuration:
- Probe: EX3DV4 - SN7515; ConvF(5.38, 5.38, 5.38) @ 5250 MHz; Calibrated: 2019/10/22
- Sensor-Surface: 1.4mm (Mechanical Surface Detection)
- Electronics: DAE4 Sn376; Calibrated: 2019/12/6
- Phantom: SAM_Right; Type: SAM; Serial: TP:1681
- Measurement SW: DASY52, Version 52.10 (4);SEMCAD X Version 14.6.14 (7483)

Pin=100mW/Area Scan (71x71x1): Interpolated grid: dx=1.000 mm, dy=1.000 mm
Maximum value of SAR (interpolated) = 18.5 W/kg

Pin=100mW/Zoom Scan (7x7x7)/Cube 0: Measurement grid: dx=4mm, dy=4mm, dz=1.4mm
Reference Value = 69.40 V/m; Power Drift = 0.07 dB
Peak SAR (extrapolated) = 31.4 W/kg
SAR(1 g) = 7.94 W/kg; SAR(10 g) = 2.22 W/kg
Maximum value of SAR (measured) = 19.4 W/kg

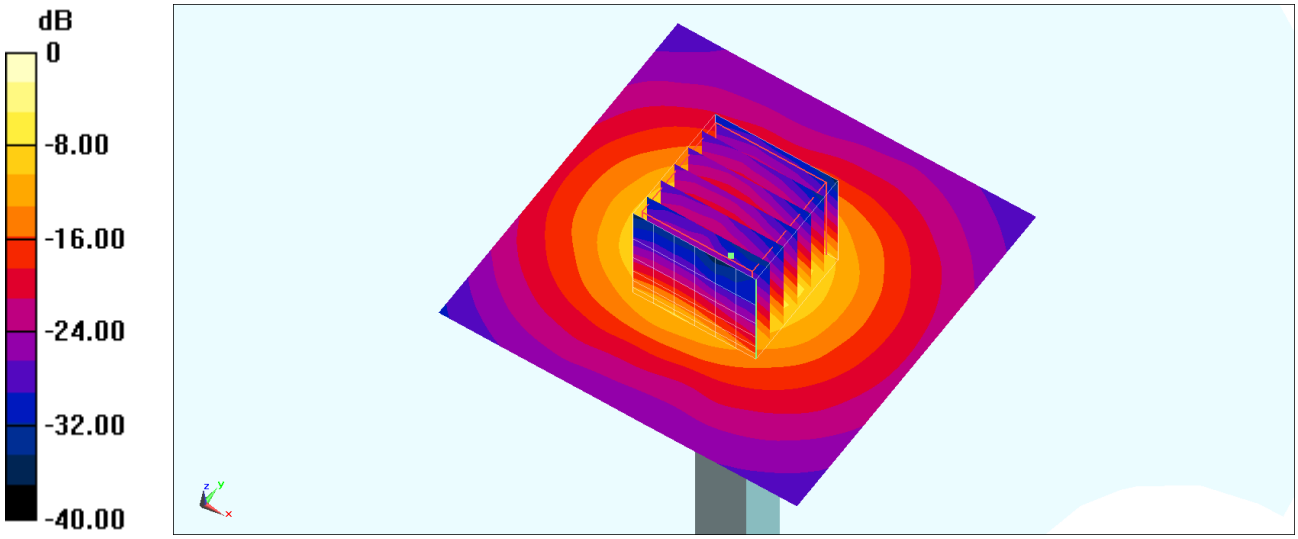

0 dB = 19.4 W/kg = 12.88 dBW/kg

System Check_Head_5600MHz

DUT: D5GHzV2-1006

Communication System: CW; Frequency: 5600 MHz;Duty Cycle: 1:1
Medium: HSL_5G_200915 Medium parameters used: f = 5600 MHz; σ = 5.033 S/m; ε_r = 35.583; ρ = 1000 kg/m^3
Ambient Temperature：23.1 ℃; Liquid Temperature：22.1 ℃

DASY5 Configuration:
- Probe: EX3DV4 - SN7515; ConvF(4.77, 4.77, 4.77) @ 5600 MHz; Calibrated: 2019/10/22
- Sensor-Surface: 1.4mm (Mechanical Surface Detection)
- Electronics: DAE4 Sn376; Calibrated: 2019/12/6
- Phantom: SAM_Right; Type: SAM; Serial: TP:1681
- Measurement SW: DASY52, Version 52.10 (4);SEMCAD X Version 14.6.14 (7483)

Pin=100mW/Area Scan (71x71x1): Interpolated grid: dx=1.000 mm, dy=1.000 mm
Maximum value of SAR (interpolated) = 21.2 W/kg

Pin=100mW/Zoom Scan (7x7x7)/Cube 0: Measurement grid: dx=4mm, dy=4mm, dz=1.4mm
Reference Value = 72.57 V/m; Power Drift = 0.05 dB
Peak SAR (extrapolated) = 37.4 W/kg
SAR(1 g) = 8.72 W/kg; SAR(10 g) = 2.41 W/kg
Maximum value of SAR (measured) = 22.0 W/kg

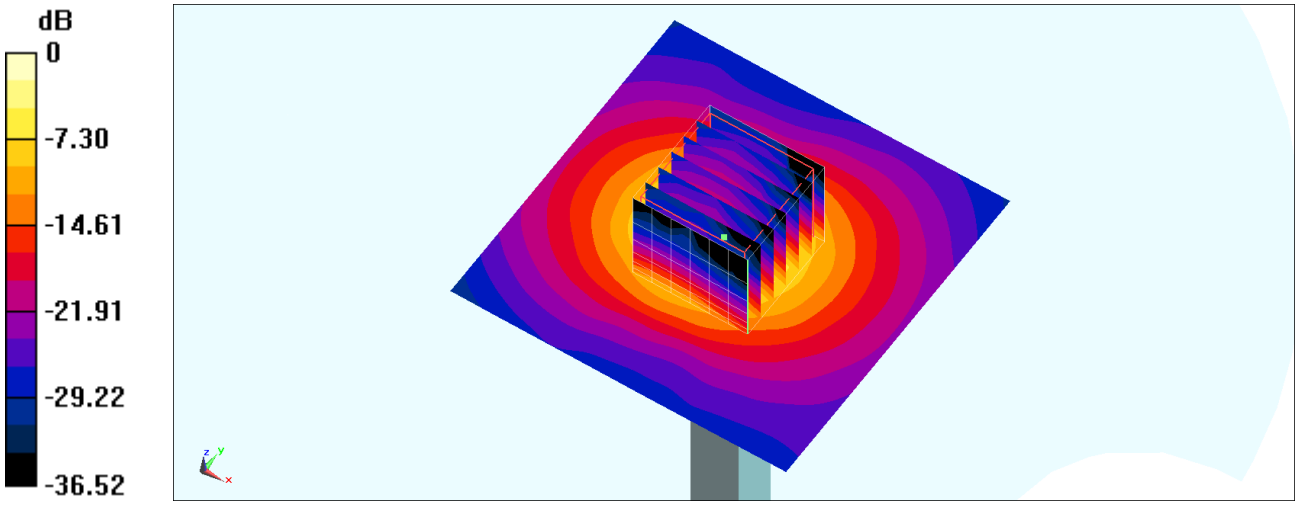

0 dB = 22.0 W/kg = 13.42 dBW/kg

System Check_Head_5600MHz

DUT: D5GHzV2-1006

Communication System: CW; Frequency: 5600 MHz;Duty Cycle: 1:1
Medium: HSL_5G_200916 Medium parameters used: f = 5600 MHz; σ = 5 S/m; ε_r = 35.207; ρ = 1000 kg/m^3
Ambient Temperature：23.1 ℃; Liquid Temperature：22.1 ℃

DASY5 Configuration:
- Probe: EX3DV4 - SN7515; ConvF(4.77, 4.77, 4.77) @ 5600 MHz; Calibrated: 2019/10/22
- Sensor-Surface: 1.4mm (Mechanical Surface Detection)
- Electronics: DAE4 Sn376; Calibrated: 2019/12/6
- Phantom: SAM_Right; Type: SAM; Serial: TP:1681
- Measurement SW: DASY52, Version 52.10 (4);SEMCAD X Version 14.6.14 (7483)

Pin=100mW/Area Scan (71x71x1): Interpolated grid: dx=1.000 mm, dy=1.000 mm
Maximum value of SAR (interpolated) = 21.1 W/kg

Pin=100mW/Zoom Scan (7x7x7)/Cube 0: Measurement grid: dx=4mm, dy=4mm, dz=1.4mm
Reference Value = 72.57 V/m; Power Drift = 0.04 dB
Peak SAR (extrapolated) = 37.1 W/kg
SAR(1 g) = 8.66 W/kg; SAR(10 g) = 2.4 W/kg
Maximum value of SAR (measured) = 21.8 W/kg

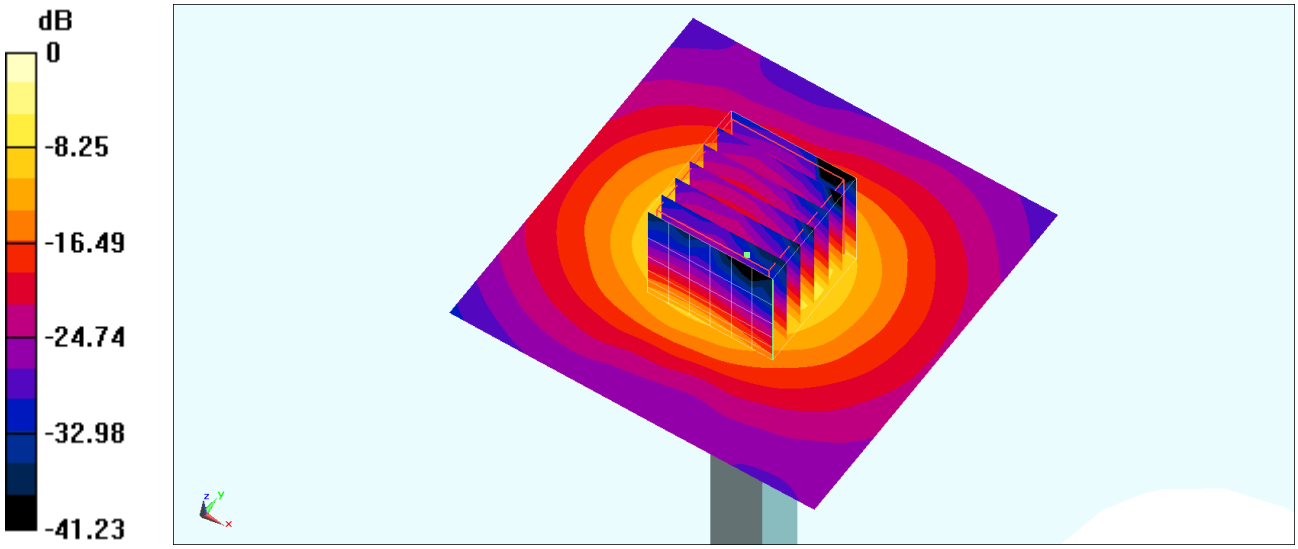

0 dB = 21.8 W/kg = 13.38 dBW/kg

System Check_Head_5600MHz

DUT: D5GHzV2-1006

Communication System: CW; Frequency: 5600 MHz;Duty Cycle: 1:1
Medium: HSL_5G_200917 Medium parameters used: f = 5600 MHz; σ = 5.145 S/m; ε_r = 36.398; ρ = 1000 kg/m^3
Ambient Temperature：23.7 ℃; Liquid Temperature：22.7 ℃

DASY5 Configuration:
- Probe: EX3DV4 - SN7515; ConvF(4.77, 4.77, 4.77) @ 5600 MHz; Calibrated: 2019/10/22
- Sensor-Surface: 1.4mm (Mechanical Surface Detection)
- Electronics: DAE4 Sn376; Calibrated: 2019/12/6
- Phantom: SAM_Right; Type: SAM; Serial: TP:1681
- Measurement SW: DASY52, Version 52.10 (4);SEMCAD X Version 14.6.14 (7483)

Pin=100mW/Area Scan (71x71x1): Interpolated grid: dx=1.000 mm, dy=1.000 mm
Maximum value of SAR (interpolated) = 21.7 W/kg

Pin=100mW/Zoom Scan (7x7x7)/Cube 0: Measurement grid: dx=4mm, dy=4mm, dz=1.4mm
Reference Value = 72.57 V/m; Power Drift = 0.05 dB
Peak SAR (extrapolated) = 38.2 W/kg
SAR(1 g) = 8.92 W/kg; SAR(10 g) = 2.47 W/kg
Maximum value of SAR (measured) = 22.5 W/kg

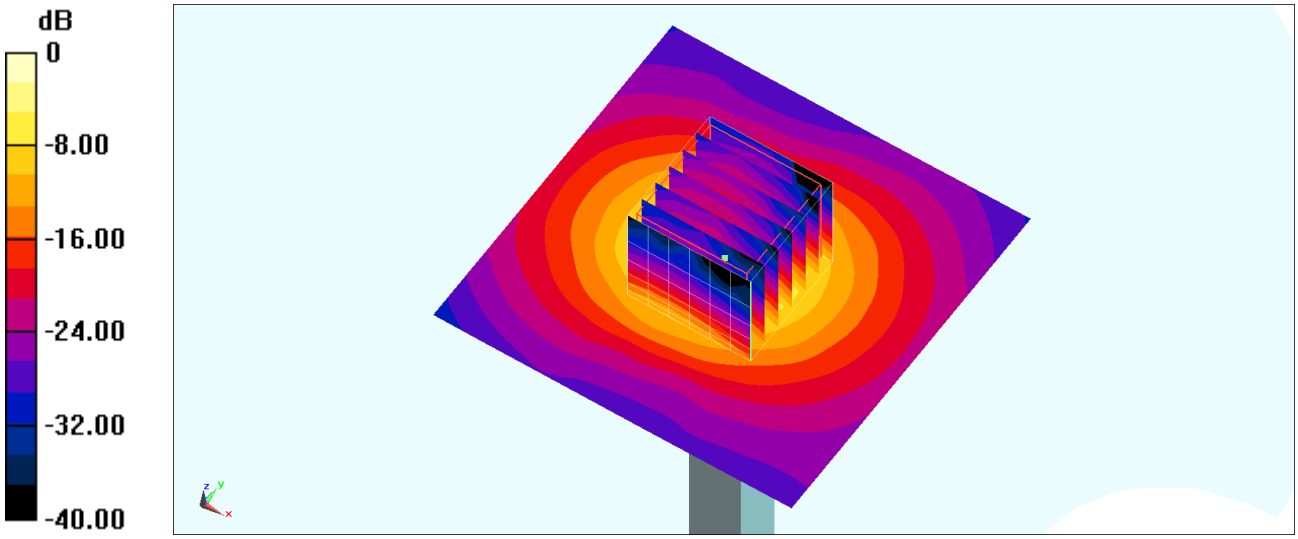

0 dB = 22.5 W/kg = 13.52 dBW/kg

System Check_Head_5600MHz

DUT: D5GHzV2-1006

Communication System: CW; Frequency: 5600 MHz;Duty Cycle: 1:1
Medium: HSL_5G_200918 Medium parameters used: f = 5600 MHz; σ = 5.093 S/m; ε_r = 36.364; ρ = 1000 kg/m^3
Ambient Temperature：23.5 ℃; Liquid Temperature：22.5 ℃

DASY5 Configuration:
- Probe: EX3DV4 - SN7515; ConvF(4.77, 4.77, 4.77) @ 5600 MHz; Calibrated: 2019/10/22
- Sensor-Surface: 1.4mm (Mechanical Surface Detection)
- Electronics: DAE4 Sn376; Calibrated: 2019/12/6
- Phantom: SAM_Right; Type: SAM; Serial: TP:1681
- Measurement SW: DASY52, Version 52.10 (4);SEMCAD X Version 14.6.14 (7483)

Pin=100mW/Area Scan (71x71x1): Interpolated grid: dx=1.000 mm, dy=1.000 mm
Maximum value of SAR (interpolated) = 24.1 W/kg

Pin=100mW/Zoom Scan (7x7x7)/Cube 0: Measurement grid: dx=4mm, dy=4mm, dz=1.4mm
Reference Value = 73.92 V/m; Power Drift = -0.01 dB
Peak SAR (extrapolated) = 39.7 W/kg
SAR(1 g) = 8.87 W/kg; SAR(10 g) = 2.51 W/kg
Maximum value of SAR (measured) = 23.2 W/kg

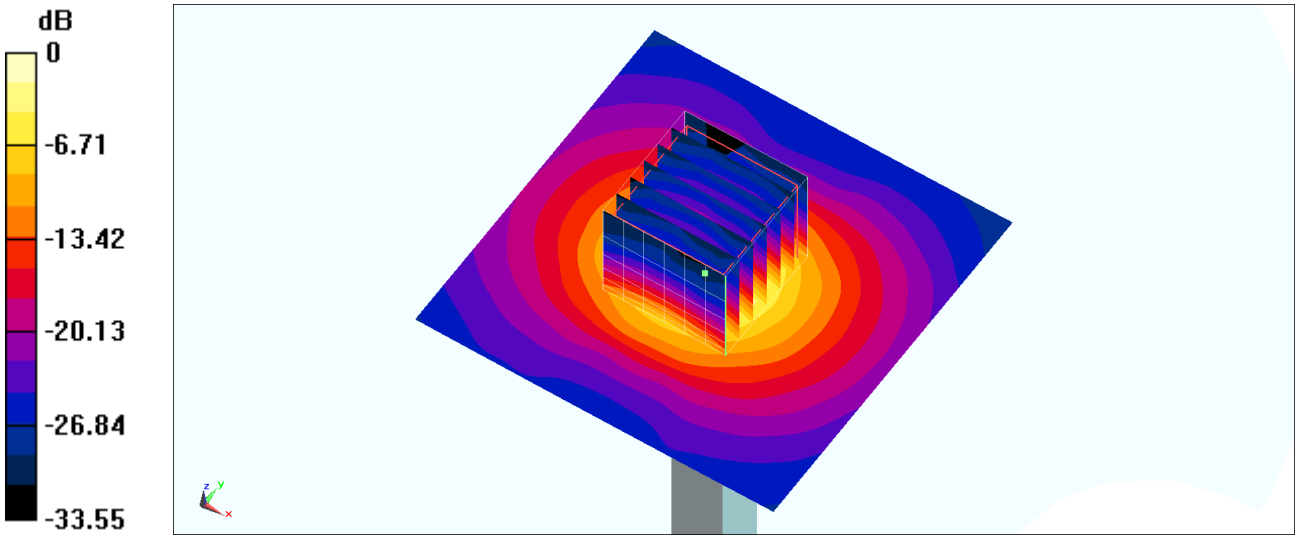

0 dB = 23.2 W/kg = 13.65 dBW/kg

System Check_Head_5750MHz

DUT: D5GHzV2-1006

Communication System: CW; Frequency: 5750 MHz;Duty Cycle: 1:1
Medium: HSL_5G_200915 Medium parameters used: f = 5750 MHz; σ = 5.183 S/m; ε_r = 35.445; ρ = 1000 kg/m^3
Ambient Temperature：23.1 ℃; Liquid Temperature：22.1 ℃

DASY5 Configuration:
- Probe: EX3DV4 - SN7515; ConvF(4.94, 4.94, 4.94) @ 5750 MHz; Calibrated: 2019/10/22
- Sensor-Surface: 1.4mm (Mechanical Surface Detection)
- Electronics: DAE4 Sn376; Calibrated: 2019/12/6
- Phantom: SAM_Right; Type: SAM; Serial: TP:1681
- Measurement SW: DASY52, Version 52.10 (4);SEMCAD X Version 14.6.14 (7483)

Pin=100mW/Area Scan (71x71x1): Interpolated grid: dx=1.000 mm, dy=1.000 mm
Maximum value of SAR (interpolated) = 19.9 W/kg

Pin=100mW/Zoom Scan (7x7x7)/Cube 0: Measurement grid: dx=4mm, dy=4mm, dz=1.4mm
Reference Value = 68.89 V/m; Power Drift = 0.07 dB
Peak SAR (extrapolated) = 36.1 W/kg
SAR(1 g) = 8.11 W/kg; SAR(10 g) = 2.25 W/kg
Maximum value of SAR (measured) = 20.6 W/kg

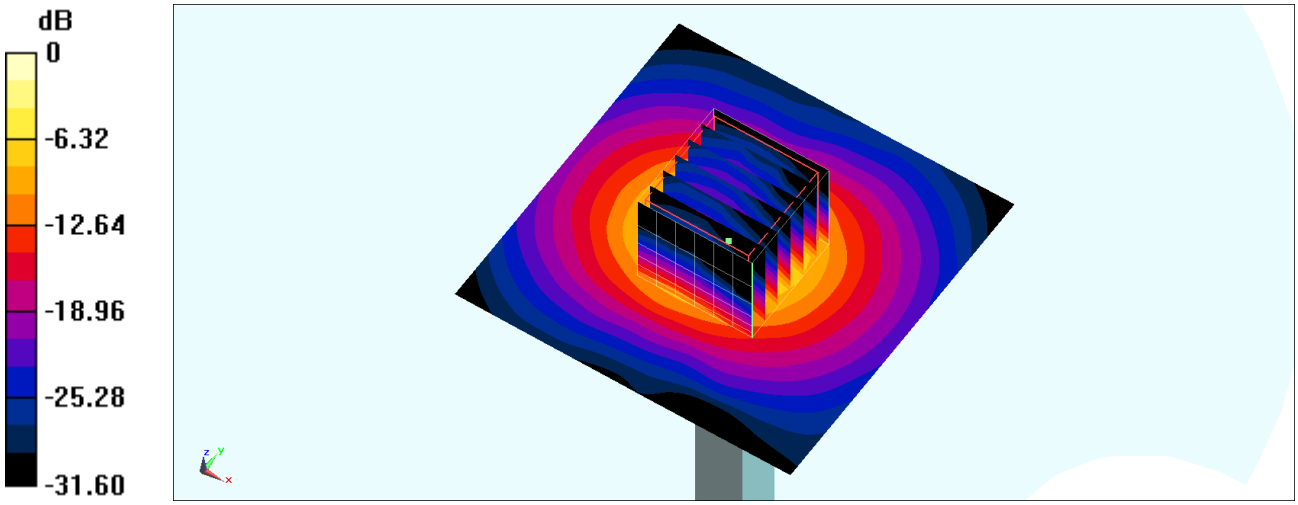

0 dB = 20.6 W/kg = 13.14 dBW/kg

System Check_Head_5750MHz

DUT: D5GHzV2-1006

Communication System: CW; Frequency: 5750 MHz;Duty Cycle: 1:1
Medium: HSL_5G_200916 Medium parameters used: f = 5750 MHz; σ = 5.15 S/m; ε_r = 35.069; ρ = 1000 kg/m^3
Ambient Temperature：23.1 ℃; Liquid Temperature：22.1 ℃

DASY5 Configuration:
- Probe: EX3DV4 - SN7515; ConvF(4.94, 4.94, 4.94) @ 5750 MHz; Calibrated: 2019/10/22
- Sensor-Surface: 1.4mm (Mechanical Surface Detection)
- Electronics: DAE4 Sn376; Calibrated: 2019/12/6
- Phantom: SAM_Right; Type: SAM; Serial: TP:1681
- Measurement SW: DASY52, Version 52.10 (4);SEMCAD X Version 14.6.14 (7483)

Pin=100mW/Area Scan (71x71x1): Interpolated grid: dx=1.000 mm, dy=1.000 mm
Maximum value of SAR (interpolated) = 19.7 W/kg

Pin=100mW/Zoom Scan (7x7x7)/Cube 0: Measurement grid: dx=4mm, dy=4mm, dz=1.4mm
Reference Value = 68.89 V/m; Power Drift = 0.07 dB
Peak SAR (extrapolated) = 35.8 W/kg
SAR(1 g) = 8.06 W/kg; SAR(10 g) = 2.24 W/kg
Maximum value of SAR (measured) = 20.5 W/kg

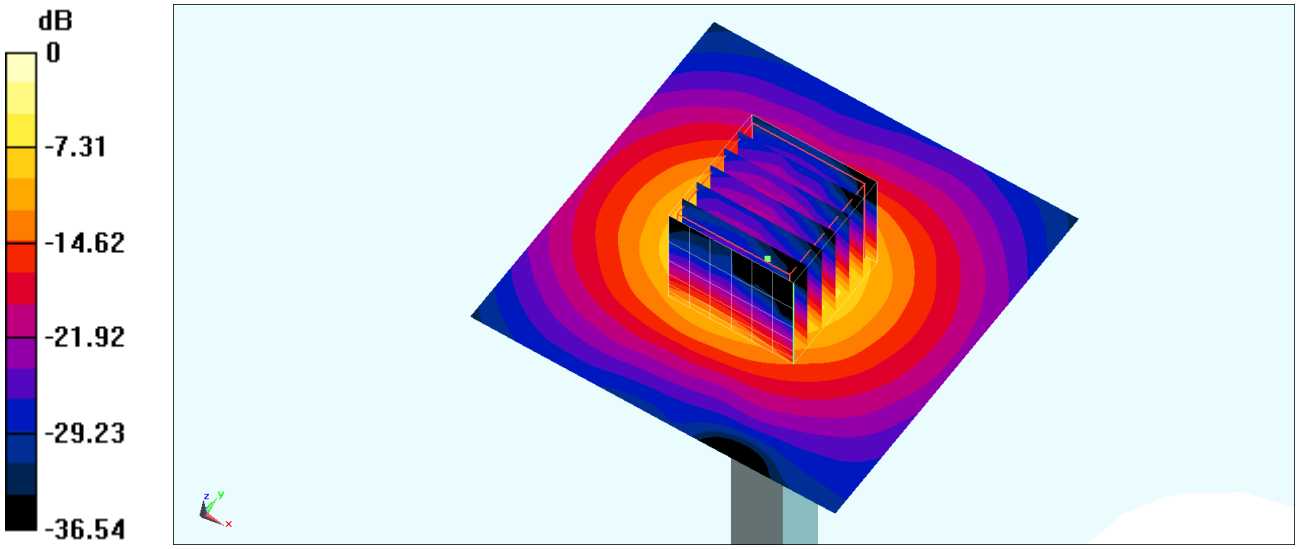

0 dB = 20.5 W/kg = 13.12 dBW/kg

System Check_Head_5750MHz

DUT: D5GHzV2-1006

Communication System: CW; Frequency: 5750 MHz;Duty Cycle: 1:1
Medium: HSL_5G_200917 Medium parameters used: f = 5750 MHz; σ = 5.307 S/m; ε_r = 36.184; ρ = 1000 kg/m^3
Ambient Temperature：23.7 ℃; Liquid Temperature：22.7 ℃

DASY5 Configuration:
- Probe: EX3DV4 - SN7515; ConvF(4.95, 4.95, 4.95) @ 5750 MHz; Calibrated: 2019/10/22
- Sensor-Surface: 1.4mm (Mechanical Surface Detection)
- Electronics: DAE4 Sn376; Calibrated: 2019/12/6
- Phantom: SAM_Right; Type: SAM; Serial: TP:1681
- Measurement SW: DASY52, Version 52.10 (4);SEMCAD X Version 14.6.14 (7483)

Pin=100mW/Area Scan (71x71x1): Interpolated grid: dx=1.000 mm, dy=1.000 mm
Maximum value of SAR (interpolated) = 20.4 W/kg

Pin=100mW/Zoom Scan (7x7x7)/Cube 0: Measurement grid: dx=4mm, dy=4mm, dz=1.4mm
Reference Value = 68.93 V/m; Power Drift = -0.07 dB
Peak SAR (extrapolated) = 36.9 W/kg
SAR(1 g) = 8.32 W/kg; SAR(10 g) = 2.31 W/kg
Maximum value of SAR (measured) = 21.2 W/kg

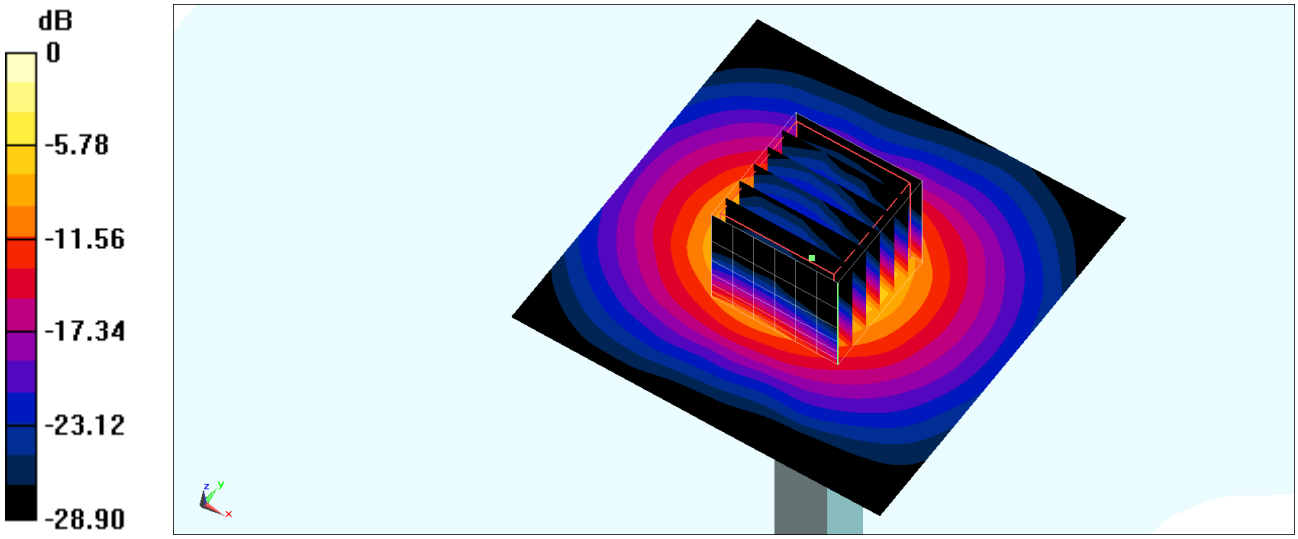

0 dB = 21.2 W/kg = 13.26 dBW/kg

System Check_Head_5750MHz

DUT: D5GHzV2-1006

Communication System: CW; Frequency: 5750 MHz;Duty Cycle: 1:1
Medium: HSL_5G_200918 Medium parameters used: f = 5750 MHz; σ = 5.259 S/m; ε_r = 36.181; ρ = 1000 kg/m^3
Ambient Temperature：23.5 ℃; Liquid Temperature：22.5 ℃

DASY5 Configuration:
- Probe: EX3DV4 - SN7515; ConvF(4.94, 4.94, 4.94) @ 5750 MHz; Calibrated: 2019/10/22
- Sensor-Surface: 1.4mm (Mechanical Surface Detection)
- Electronics: DAE4 Sn376; Calibrated: 2019/12/6
- Phantom: SAM_Right; Type: SAM; Serial: TP:1681
- Measurement SW: DASY52, Version 52.10 (4);SEMCAD X Version 14.6.14 (7483)

Pin=100mW/Area Scan (71x71x1): Interpolated grid: dx=1.000 mm, dy=1.000 mm
Maximum value of SAR (interpolated) = 20.1 W/kg

Pin=100mW/Zoom Scan (7x7x7)/Cube 0: Measurement grid: dx=4mm, dy=4mm, dz=1.4mm
Reference Value = 68.89 V/m; Power Drift = 0.11 dB
Peak SAR (extrapolated) = 36.6 W/kg
SAR(1 g) = 8.23 W/kg; SAR(10 g) = 2.28 W/kg
Maximum value of SAR (measured) = 20.9 W/kg

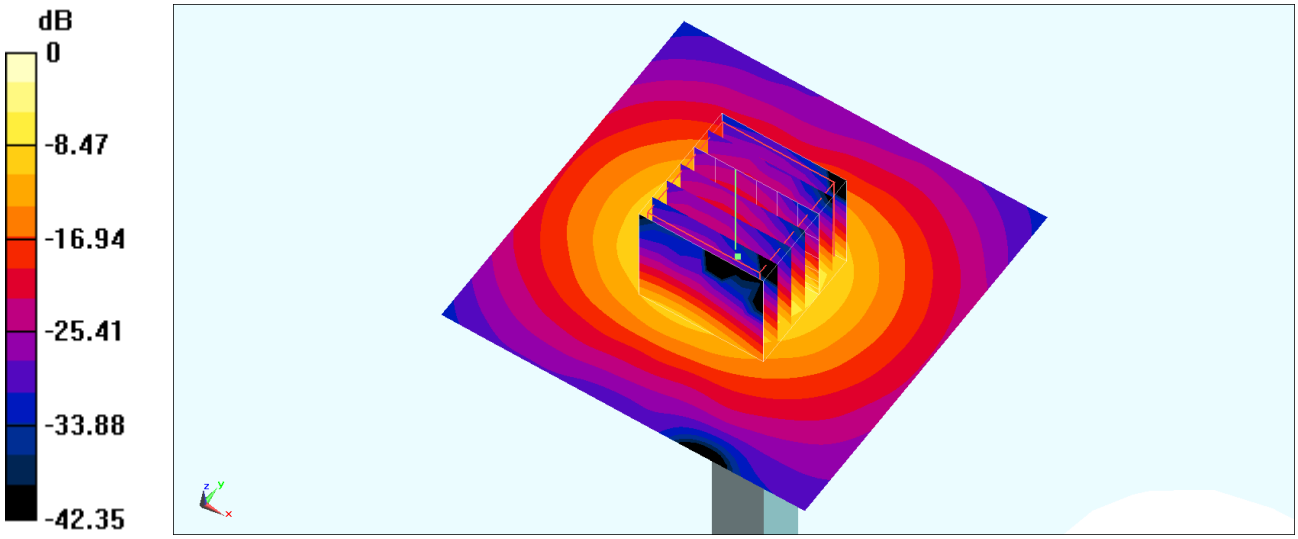

0 dB = 20.9 W/kg = 13.20 dBW/kg