Test Laboratory: Sporton International Inc. SAR/HAC Testing Lab Date: 2017/5/19

System Check_Head_835MHz

DUT: D835V2-4d092

Communication System: CW; Frequency: 835 MHz;Duty Cycle: 1:1
Medium: HSL_850_170519 Medium parameters used: f = 835 MHz; σ = 0.901 mho/m; ε_r = 42; ρ = 1000 kg/m^3
Ambient Temperature：23.6 ℃； Liquid Temperature：22.6 ℃

DASY4 Configuration:
- Probe: ES3DV3 - SN3270; ConvF(6.03, 6.03, 6.03); Calibrated: 2016/8/26
- Sensor-Surface: 3mm (Mechanical Surface Detection)
- Electronics: DAE4 Sn916; Calibrated: 2016/12/15
- Phantom: SAM_Right; Type: QD000P40CD; Serial: TP:1815
- ;Postprocessing SW: SEMCAD, V1.8 Build 159

Pin=250mW/Area Scan (61x61x1): Measurement grid: dx=15mm, dy=15mm
Maximum value of SAR (interpolated) = 2.93 mW/g

Pin=250mW/Zoom Scan (5x5x7)/Cube 0: Measurement grid: dx=8mm, dy=8mm, dz=5mm
Reference Value = 58.5 V/m; Power Drift = 0.014 dB
Peak SAR (extrapolated) = 3.70 W/kg
SAR(1 g) = 2.5 mW/g; SAR(10 g) = 1.64 mW/g
Maximum value of SAR (measured) = 2.91 mW/g

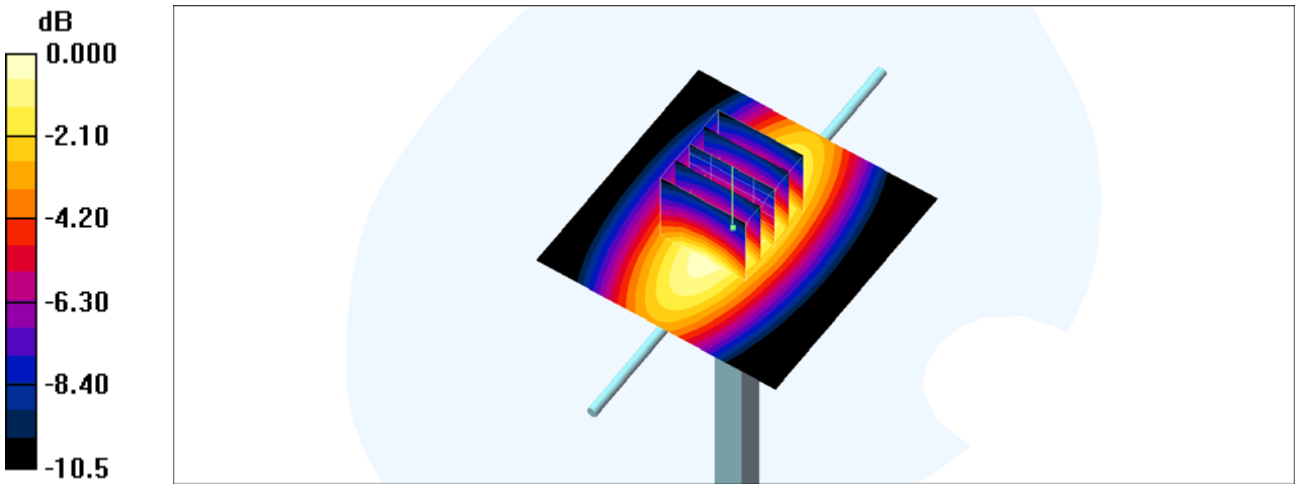

0 dB = 2.91mW/g

Test Laboratory: Sporton International Inc. SAR/HAC Testing Lab Date: 2017/5/18

System Check_Body_835MHz

DUT: D835V2-4d092

Communication System: CW; Frequency: 835 MHz;Duty Cycle: 1:1
Medium: MSL_850_170518 Medium parameters used: f = 835 MHz; σ = 0.975 mho/m; ε_r = 56.3; ρ = 1000 kg/m^3
Ambient Temperature：23.5 ℃； Liquid Temperature：22.5 ℃

DASY4 Configuration:
- Probe: ES3DV3 - SN3270; ConvF(6.01, 6.01, 6.01); Calibrated: 2016/8/26
- Sensor-Surface: 3mm (Mechanical Surface Detection)
- Electronics: DAE4 Sn916; Calibrated: 2016/12/15
- Phantom: SAM_Right; Type: QD000P40CD; Serial: TP:1815
- ;Postprocessing SW: SEMCAD, V1.8 Build 159

Pin=250mW/Area Scan (61x61x1): Measurement grid: dx=15mm, dy=15mm
Maximum value of SAR (interpolated) = 2.93 mW/g

Pin=250mW/Zoom Scan (5x5x7)/Cube 0: Measurement grid: dx=8mm, dy=8mm, dz=5mm
Reference Value = 56.8 V/m; Power Drift = -0.042 dB
Peak SAR (extrapolated) = 3.67 W/kg
SAR(1 g) = 2.51 mW/g; SAR(10 g) = 1.65 mW/g
Maximum value of SAR (measured) = 2.92 mW/g

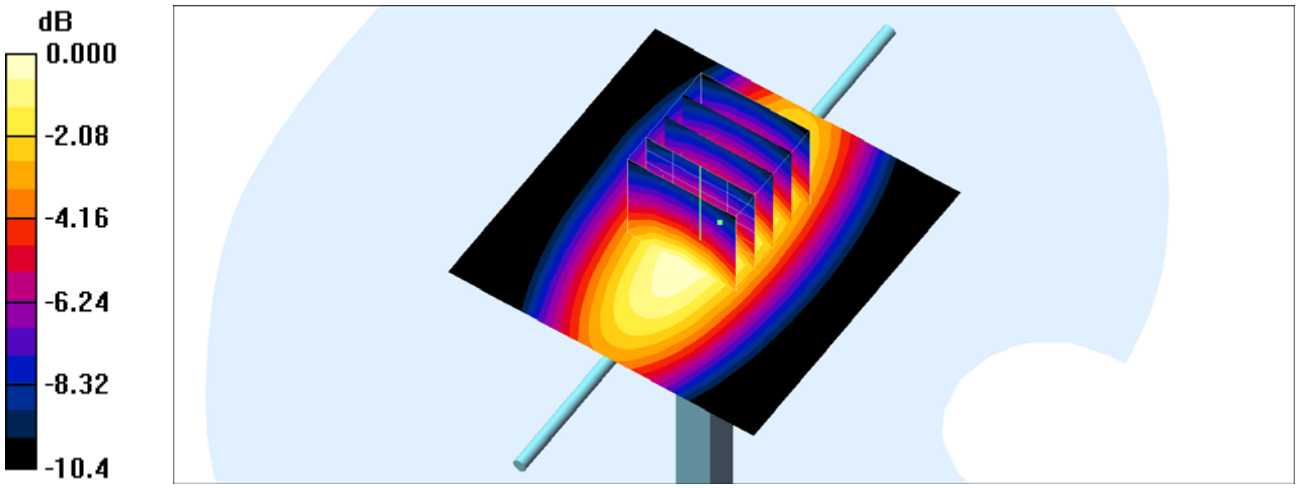

0 dB = 2.92mW/g

System Check_Head_1900MHz

DUT: D1900V2-5d041

Communication System: CW; Frequency: 1900 MHz;Duty Cycle: 1:1
Medium: HSL_1900_170520 Medium parameters used: f = 1900 MHz; σ = 1.432 S/m; ε_r = 40.626; ρ = 1000 kg/m^3
Ambient Temperature：23.2 ℃; Liquid Temperature：22.2 ℃

DASY5 Configuration:
- Probe: ES3DV3 - SN3270; ConvF(5.08, 5.08, 5.08); Calibrated: 2016/8/26;
- Sensor-Surface: 3mm (Mechanical Surface Detection)
- Electronics: DAE4 Sn916; Calibrated: 2016/12/15
- Phantom: SAM-Left; Type: QD 000 P40 C; Serial: TP-1446
- Measurement SW: DASY52, Version 52.8 (8);SEMCAD X Version 14.6.10 (7331)

Pin=250mW/Area Scan (61x61x1): Interpolated grid: dx=1.500 mm, dy=1.500 mm
Maximum value of SAR (interpolated) = 13.0 W/kg

Pin=250mW/Zoom Scan (5x5x7)/Cube 0: Measurement grid: dx=8mm, dy=8mm, dz=5mm
Reference Value = 97.42 V/m; Power Drift = -0.02 dB
Peak SAR (extrapolated) = 17.5 W/kg
SAR(1 g) = 9.99 W/kg; SAR(10 g) = 5.33 W/kg
Maximum value of SAR (measured) = 12.2 W/kg

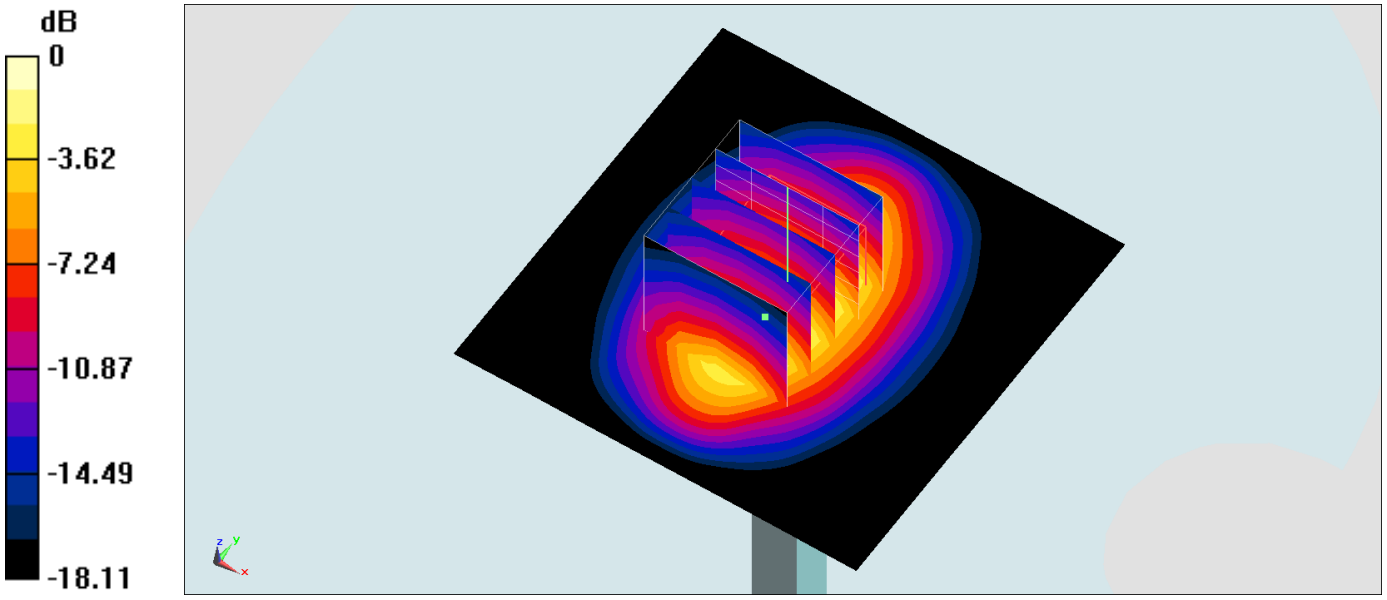

0 dB = 12.2 W/kg = 10.86 dBW/kg

Test Laboratory: Sporton International Inc. SAR/HAC Testing Lab Date: 2017/5/18

System Check_Body_1900MHz

DUT: D1900V2-5d041

Communication System: CW; Frequency: 1900 MHz;Duty Cycle: 1:1
Medium: MSL_1900_170518 Medium parameters used: f = 1900 MHz; σ = 1.52 mho/m; ε_r = 55.1; ρ = 1000 kg/m^3
Ambient Temperature：23.5 ℃； Liquid Temperature：22.5 ℃

DASY4 Configuration:
- Probe: ES3DV3 - SN3270; ConvF(4.7, 4.7, 4.7); Calibrated: 2016/8/26
- Sensor-Surface: 3mm (Mechanical Surface Detection)
- Electronics: DAE4 Sn916; Calibrated: 2016/12/15
- Phantom: SAM_Right; Type: QD000P40CD; Serial: TP:1815
- ;Postprocessing SW: SEMCAD, V1.8 Build 159

Pin=250mW/Area Scan (61x61x1): Measurement grid: dx=15mm, dy=15mm
Maximum value of SAR (interpolated) = 13.2 mW/g

Pin=250mW/Zoom Scan (5x5x7)/Cube 0: Measurement grid: dx=8mm, dy=8mm, dz=5mm
Reference Value = 92.9 V/m; Power Drift = 0.007 dB
Peak SAR (extrapolated) = 17.4 W/kg
SAR(1 g) = 10 mW/g; SAR(10 g) = 5.31 mW/g
Maximum value of SAR (measured) = 12.4 mW/g

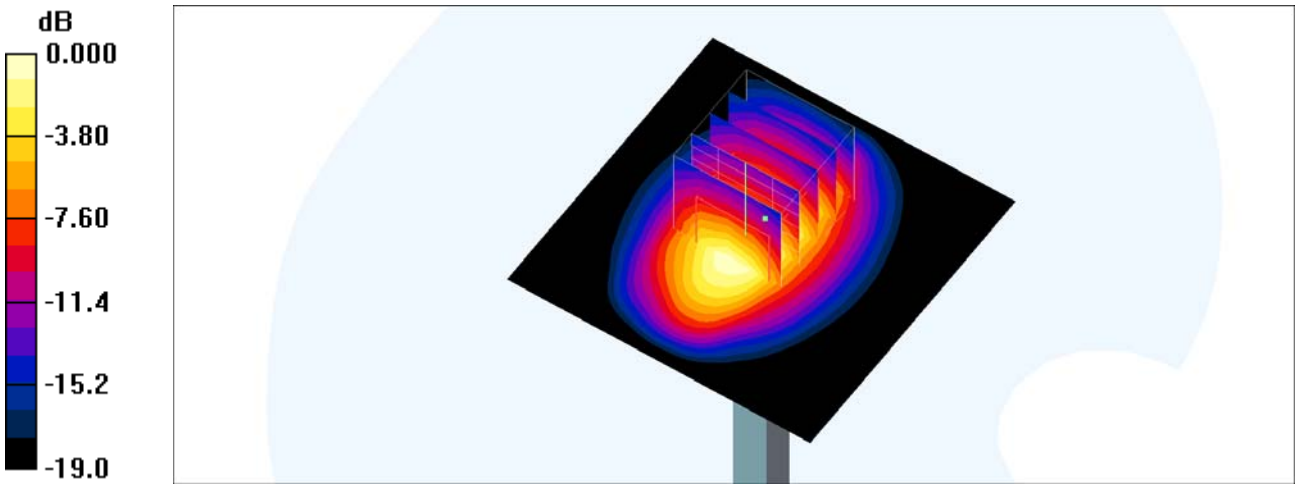

0 dB = 12.4mW/g

Test Laboratory: Sporton International Inc. SAR/HAC Testing Lab Date: 2017/5/29

System Check_Head_2450MHz

DUT: D2450V2-926

Communication System: CW; Frequency: 2450 MHz;Duty Cycle: 1:1
Medium: HSL_2450_170529 Medium parameters used: f = 2450 MHz; σ = 1.79 mho/m; ε_r = 39.4; ρ = 1000 kg/m^3
Ambient Temperature：23.4 ℃； Liquid Temperature：22.4 ℃

DASY4 Configuration:
- Probe: EX3DV4 - SN3955; ConvF(7.56, 7.56, 7.56); Calibrated: 2016/11/24
- Sensor-Surface: 1.4mm (Mechanical Surface Detection)
- Electronics: DAE4 Sn1399; Calibrated: 2016/11/17
- Phantom: SAM_Right; Type: QD000P40CD; Serial: TP:1815
- ;Postprocessing SW: SEMCAD, V1.8 Build 159

Pin=250mW/Area Scan (71x71x1): Measurement grid: dx=12mm, dy=12mm
Maximum value of SAR (interpolated) = 23.3 mW/g

Pin=250mW/Zoom Scan (7x7x7)/Cube 0: Measurement grid: dx=5mm, dy=5mm, dz=5mm
Reference Value = 116.9 V/m; Power Drift = -0.117 dB
Peak SAR (extrapolated) = 27.8 W/kg
SAR(1 g) = 13.1 mW/g; SAR(10 g) = 5.95 mW/g
Maximum value of SAR (measured) = 22.1 mW/g

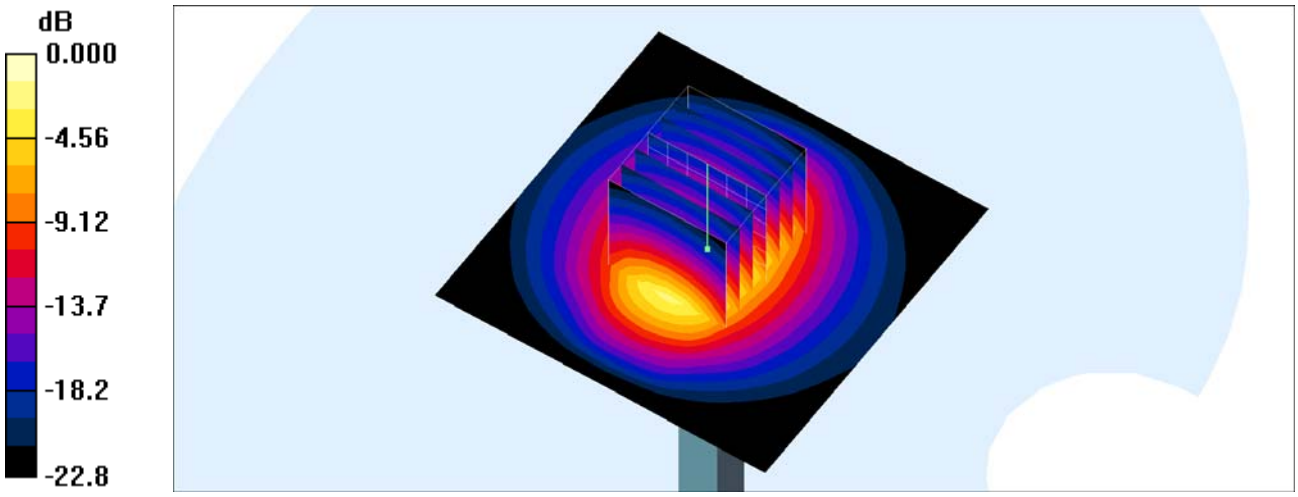

0 dB = 22.1mW/g

Test Laboratory: Sporton International Inc. SAR/HAC Testing Lab Date: 2017/5/30

System Check_Body_2450MHz

DUT: D2450V2-926

Communication System: CW; Frequency: 2450 MHz;Duty Cycle: 1:1
Medium: MSL_2450_170530 Medium parameters used: f = 2450 MHz; σ = 1.96 mho/m; ε_r = 54.9; ρ = 1000 kg/m^3
Ambient Temperature：23.4 ℃; Liquid Temperature：22.4 ℃

DASY4 Configuration:
- Probe: EX3DV4 - SN3955; ConvF(7.65, 7.65, 7.65); Calibrated: 2016/11/24
- Sensor-Surface: 1.4mm (Mechanical Surface Detection)
- Electronics: DAE4 Sn1399; Calibrated: 2016/11/17
- Phantom: SAM_Right; Type: QD000P40CD; Serial: TP:1815
- ;Postprocessing SW: SEMCAD, V1.8 Build 159

Pin=250mW/Area Scan (61x61x1): Measurement grid: dx=12mm, dy=12mm
Maximum value of SAR (interpolated) = 18.7 mW/g

Pin=250mW/Zoom Scan (7x7x7)/Cube 0: Measurement grid: dx=5mm, dy=5mm, dz=5mm
Reference Value = 99.1 V/m; Power Drift = 0.012 dB
Peak SAR (extrapolated) = 24.9 W/kg
SAR(1 g) = 12.4 mW/g; SAR(10 g) = 5.78 mW/g
Maximum value of SAR (measured) = 18.7 mW/g

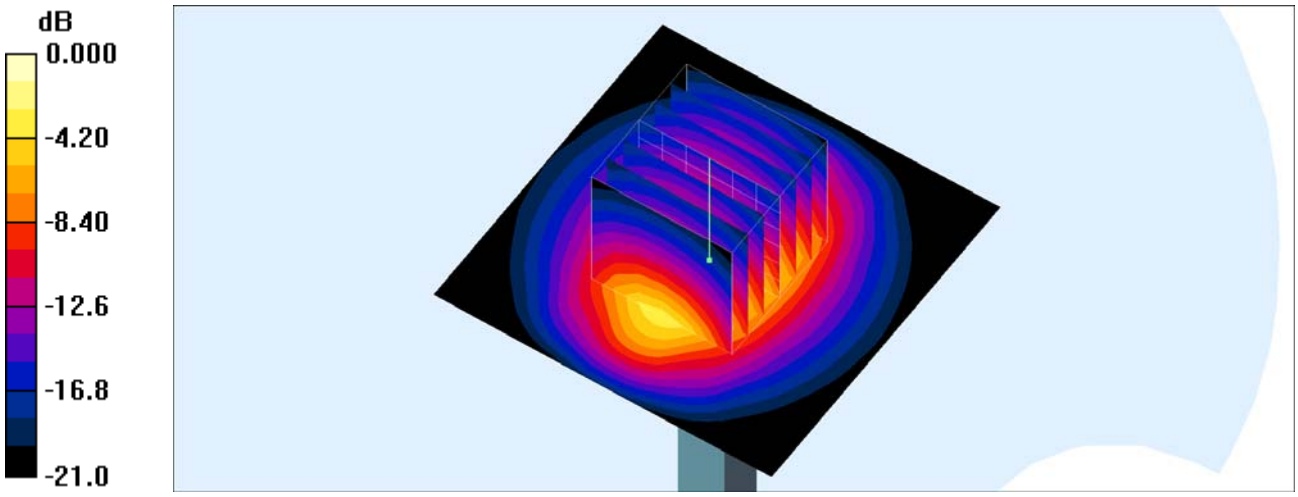

0 dB = 18.7mW/g

Test Laboratory: Sporton International Inc. SAR/HAC Testing Lab Date: 2017/5/19

System Check_Head_2600MHz

DUT: D2600V2-1008

Communication System: CW; Frequency: 2600 MHz;Duty Cycle: 1:1
Medium: HSL_2600_170519 Medium parameters used: f = 2600 MHz; σ = 1.95 mho/m; ε_r = 39; ρ = 1000 kg/m^3
Ambient Temperature：23.2 ℃; Liquid Temperature：22.2 ℃

DASY4 Configuration:
- Probe: ES3DV3 - SN3270; ConvF(4.37, 4.37, 4.37); Calibrated: 2016/8/26
- Sensor-Surface: 3mm (Mechanical Surface Detection)
- Electronics: DAE4 Sn916; Calibrated: 2016/12/15
- Phantom: SAM_Right; Type: QD000P40CD; Serial: TP:1815
- ;Postprocessing SW: SEMCAD, V1.8 Build 159

Pin=250mW/Area Scan (61x61x1): Measurement grid: dx=12mm, dy=12mm
Maximum value of SAR (interpolated) = 21.0 mW/g

Pin=250mW/Zoom Scan (7x7x7)/Cube 0: Measurement grid: dx=5mm, dy=5mm, dz=5mm
Reference Value = 100.7 V/m; Power Drift = -0.059 dB
Peak SAR (extrapolated) = 30.0 W/kg
SAR(1 g) = 14.5 mW/g; SAR(10 g) = 6.83 mW/g
Maximum value of SAR (measured) = 19.0 mW/g

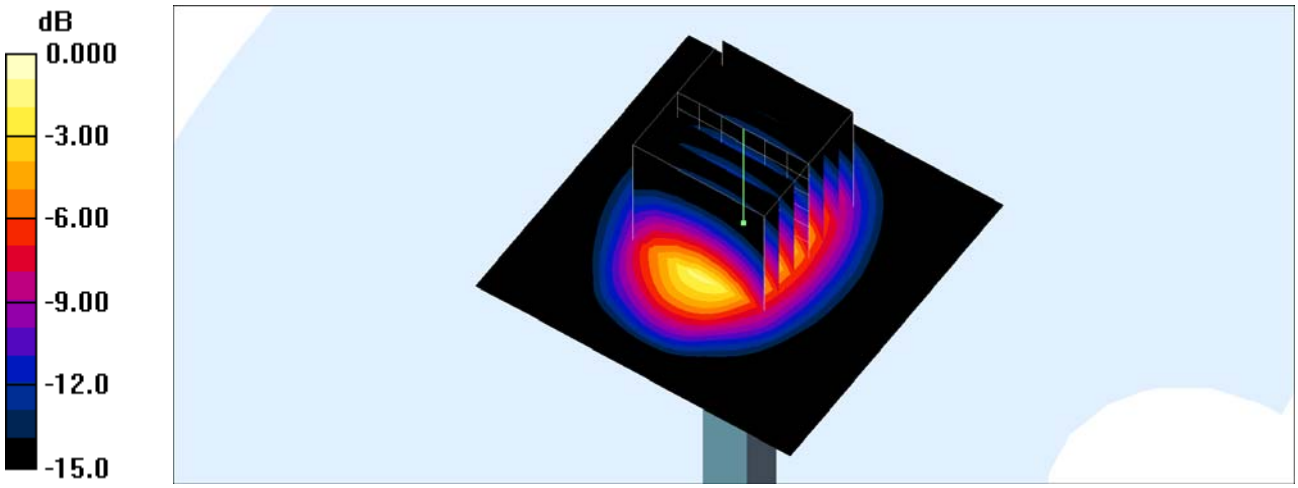

0 dB = 19.0mW/g

Test Laboratory: Sporton International Inc. SAR/HAC Testing Lab Date: 2017/5/16

System Check_Body_2600MHz

DUT: D2600V2-1008

Communication System: CW; Frequency: 2600 MHz;Duty Cycle: 1:1
Medium: MSL_2600_170516 Medium parameters used: f = 2600 MHz; σ = 2.19 mho/m; ε_r = 53.6; ρ = 1000 kg/m^3
Ambient Temperature：23.8 ℃; Liquid Temperature：22.8 ℃

DASY4 Configuration:
- Probe: ES3DV3 - SN3270; ConvF(4.12, 4.12, 4.12); Calibrated: 2016/8/26
- Sensor-Surface: 3mm (Mechanical Surface Detection)
- Electronics: DAE4 Sn916; Calibrated: 2016/12/15
- Phantom: SAM_Right; Type: QD000P40CD; Serial: TP:1815
- ;Postprocessing SW: SEMCAD, V1.8 Build 159

Pin=250mW/Area Scan (61x61x1): Measurement grid: dx=12mm, dy=12mm
Maximum value of SAR (interpolated) = 21.1 mW/g

Pin=250mW/Zoom Scan (7x7x7)/Cube 0: Measurement grid: dx=5mm, dy=5mm, dz=5mm
Reference Value = 99.1 V/m; Power Drift = -0.037 dB
Peak SAR (extrapolated) = 32.1 W/kg
SAR(1 g) = 14.8 mW/g; SAR(10 g) = 6.55 mW/g
Maximum value of SAR (measured) = 19.8 mW/g

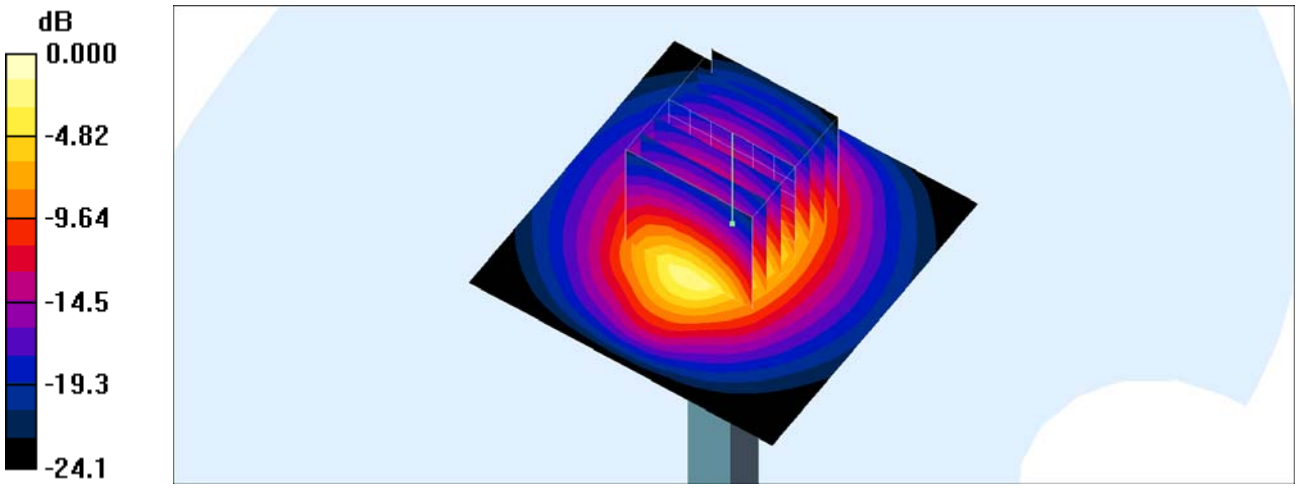

0 dB = 19.8mW/g

Test Laboratory: Sporton International Inc. SAR/HAC Testing Lab Date: 2017/5/29

System Check_Head_5250MHz

DUT: D5GHzV2-1006

Communication System: CW; Frequency: 5250 MHz;Duty Cycle: 1:1
Medium: HSL_5G_170529 Medium parameters used: f = 5250 MHz; σ = 4.52 mho/m; ε_r = 37.3; ρ = 1000 kg/m^3
Ambient Temperature：23.2 ℃； Liquid Temperature：22.2 ℃

DASY4 Configuration:
- Probe: EX3DV4 - SN3955; ConvF(5.04, 5.04, 5.04); Calibrated: 2016/11/24
- Sensor-Surface: 1.4mm (Mechanical Surface Detection)
- Electronics: DAE4 Sn1399; Calibrated: 2016/11/17
- Phantom: SAM_Right; Type: QD000P40CD; Serial: TP:1815
- ;Postprocessing SW: SEMCAD, V1.8 Build 159

Pin=100mW/Area Scan (71x71x1): Measurement grid: dx=10mm, dy=10mm
Maximum value of SAR (interpolated) = 18.5 mW/g

Pin=100mW/Zoom Scan (7x7x7)/Cube 0: Measurement grid: dx=4mm, dy=4mm, dz=1.4mm
Reference Value = 52.6 V/m; Power Drift = -0.105 dB
Peak SAR (extrapolated) = 30.2 W/kg
SAR(1 g) = 7.62 mW/g; SAR(10 g) = 2.12 mW/g
Maximum value of SAR (measured) = 18.8 mW/g

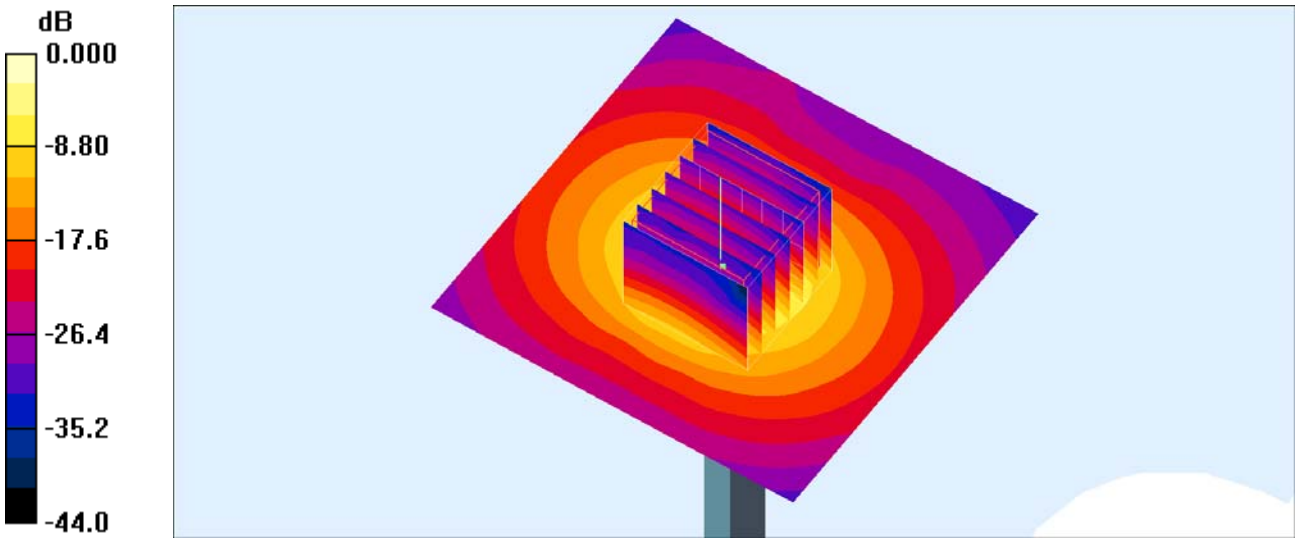

0 dB = 18.8mW/g

Test Laboratory: Sporton International Inc. SAR/HAC Testing Lab Date: 2017/5/30

System Check_Body_5250MHz

DUT: D5GHzV2-1006

Communication System: CW; Frequency: 5250 MHz;Duty Cycle: 1:1
Medium: MSL_5G_170530 Medium parameters used: f = 5250 MHz; σ = 5.39 mho/m; ε_r = 47; ρ = 1000 kg/m^3
Ambient Temperature：23.5 ℃; Liquid Temperature：22.5 ℃

DASY4 Configuration:
- Probe: EX3DV4 - SN3955; ConvF(4.51, 4.51, 4.51); Calibrated: 2016/11/24
- Sensor-Surface: 1.4mm (Mechanical Surface Detection)
- Electronics: DAE4 Sn1399; Calibrated: 2016/11/17
- Phantom: SAM_Right; Type: QD000P40CD; Serial: TP:1815
- ;Postprocessing SW: SEMCAD, V1.8 Build 159

Pin=100mW/Area Scan (71x71x1): Measurement grid: dx=10mm, dy=10mm
Maximum value of SAR (interpolated) = 20.7 mW/g

Pin=100mW/Zoom Scan (7x7x7)/Cube 0: Measurement grid: dx=4mm, dy=4mm, dz=1.4mm
Reference Value = 64.8 V/m; Power Drift = 0.017 dB
Peak SAR (extrapolated) = 31.4 W/kg
SAR(1 g) = 7.7 mW/g; SAR(10 g) = 2.06 mW/g
Maximum value of SAR (measured) = 19.6 mW/g

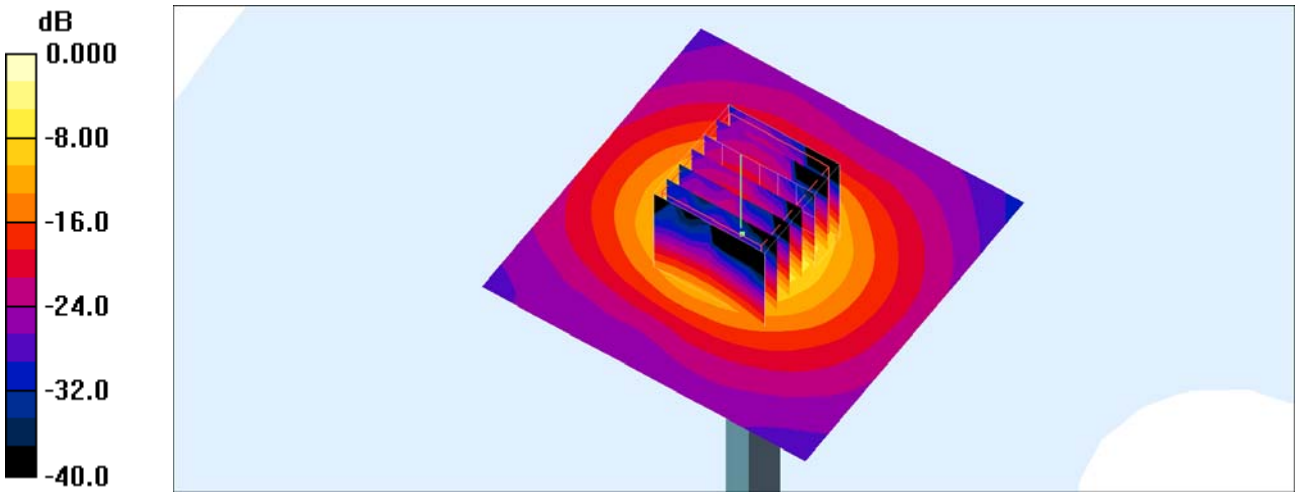

0 dB = 19.6mW/g

Test Laboratory: Sporton International Inc. SAR/HAC Testing Lab Date: 2017/5/29

System Check_Head_5600MHz

DUT: D5GHzV2-1006

Communication System: CW; Frequency: 5600 MHz;Duty Cycle: 1:1
Medium: HSL_5G_170529 Medium parameters used: f = 5600 MHz; σ = 4.88 mho/m; ε_r = 36.8; ρ = 1000 kg/m^3
Ambient Temperature：23.2 ℃; Liquid Temperature：22.2 ℃

DASY4 Configuration:
- Probe: EX3DV4 - SN3955; ConvF(4.5, 4.5, 4.5); Calibrated: 2016/11/24
- Sensor-Surface: 1.4mm (Mechanical Surface Detection)
- Electronics: DAE4 Sn1399; Calibrated: 2016/11/17
- Phantom: SAM_Right; Type: QD000P40CD; Serial: TP:1815
- ;Postprocessing SW: SEMCAD, V1.8 Build 159

Pin=100mW/Area Scan (71x71x1): Measurement grid: dx=10mm, dy=10mm
Maximum value of SAR (interpolated) = 21.0 mW/g

Pin=100mW/Zoom Scan (7x7x7)/Cube 0: Measurement grid: dx=4mm, dy=4mm, dz=1.4mm
Reference Value = 72.8 V/m; Power Drift = -0.122 dB
Peak SAR (extrapolated) = 32.9 W/kg
SAR(1 g) = 8.28 mW/g; SAR(10 g) = 2.34 mW/g
Maximum value of SAR (measured) = 20.2 mW/g

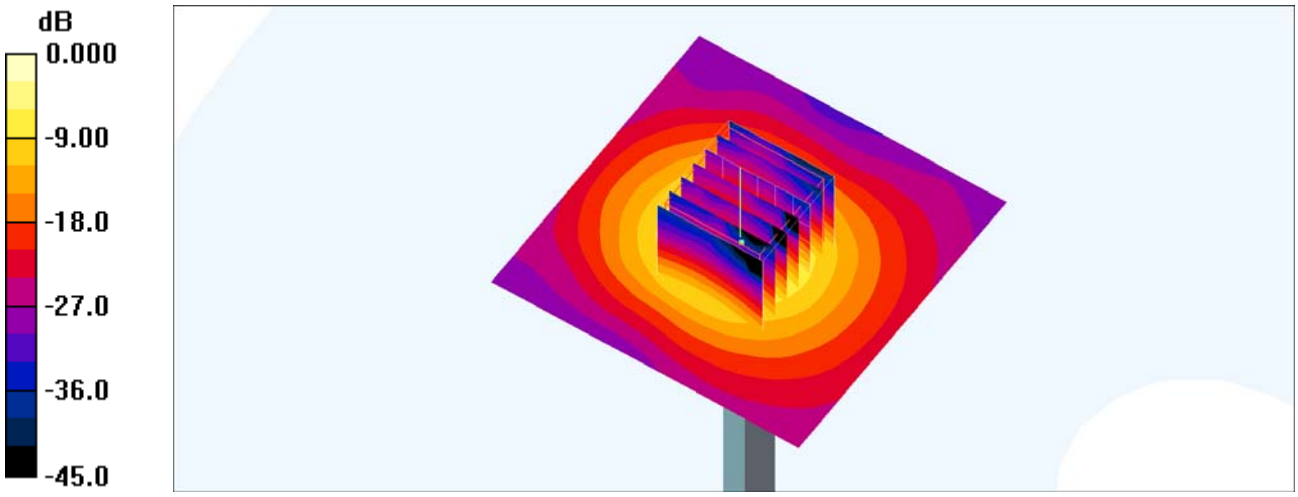

0 dB = 20.2mW/g

Test Laboratory: Sporton International Inc. SAR/HAC Testing Lab Date: 2017/5/30

System Check_Body_5600MHz

DUT: D5GHzV2-1006

Communication System: CW; Frequency: 5600 MHz;Duty Cycle: 1:1
Medium: MSL_5G_170530 Medium parameters used: f = 5600 MHz; σ = 5.85 mho/m; ε_r = 46.3; ρ = 1000 kg/m^3
Ambient Temperature：23.5 ℃； Liquid Temperature：22.5 ℃

DASY4 Configuration:
- Probe: EX3DV4 - SN3955; ConvF(3.91, 3.91, 3.91); Calibrated: 2016/11/24
- Sensor-Surface: 1.4mm (Mechanical Surface Detection)
- Electronics: DAE4 Sn1399; Calibrated: 2016/11/17
- Phantom: SAM_Right; Type: QD000P40CD; Serial: TP:1815
- ;Postprocessing SW: SEMCAD, V1.8 Build 159

Pin=100mW/Area Scan (71x71x1): Measurement grid: dx=10mm, dy=10mm
Maximum value of SAR (interpolated) = 20.6 mW/g

Pin=100mW/Zoom Scan (7x7x7)/Cube 0: Measurement grid: dx=4mm, dy=4mm, dz=1.4mm
Reference Value = 64.6 V/m; Power Drift = 0.138 dB
Peak SAR (extrapolated) = 32.7 W/kg
SAR(1 g) = 8.01 mW/g; SAR(10 g) = 2.15 mW/g
Maximum value of SAR (measured) = 20.3 mW/g

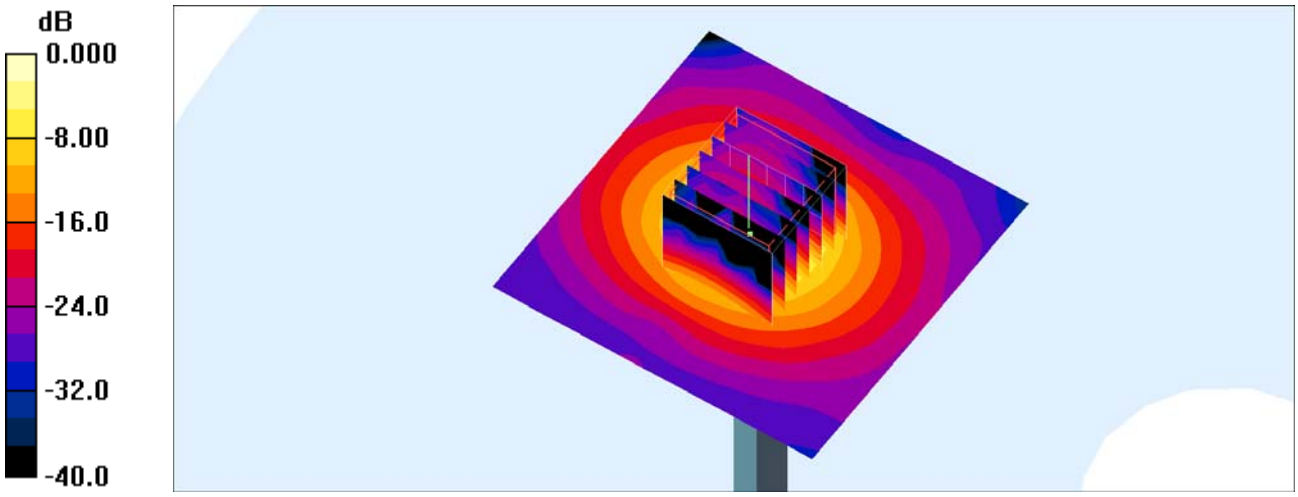

0 dB = 20.3mW/g

Test Laboratory: Sporton International Inc. SAR/HAC Testing Lab Date: 2017/5/29

System Check_Head_5750MHz

DUT: D5GHzV2-1006

Communication System: CW; Frequency: 5750 MHz;Duty Cycle: 1:1
Medium: HSL_5G_170529 Medium parameters used: f = 5750 MHz; σ = 5.01 mho/m; ε_r = 36.7; ρ = 1000 kg/m^3
Ambient Temperature：23.2 ℃； Liquid Temperature：22.2 ℃

DASY4 Configuration:
- Probe: EX3DV4 - SN3955; ConvF(4.63, 4.63, 4.63); Calibrated: 2016/11/24
- Sensor-Surface: 1.4mm (Mechanical Surface Detection)
- Electronics: DAE4 Sn1399; Calibrated: 2016/11/17
- Phantom: SAM_Right; Type: QD000P40CD; Serial: TP:1815
- ;Postprocessing SW: SEMCAD, V1.8 Build 159

Pin=100mW/Area Scan (71x71x1): Measurement grid: dx=10mm, dy=10mm
Maximum value of SAR (interpolated) = 21.2 mW/g

Pin=100mW/Zoom Scan (7x7x7)/Cube 0: Measurement grid: dx=4mm, dy=4mm, dz=1.4mm
Reference Value = 72.3 V/m; Power Drift = 0.102 dB
Peak SAR (extrapolated) = 37.5 W/kg
SAR(1 g) = 8.26 mW/g; SAR(10 g) = 2.29 mW/g
Maximum value of SAR (measured) = 21.2 mW/g

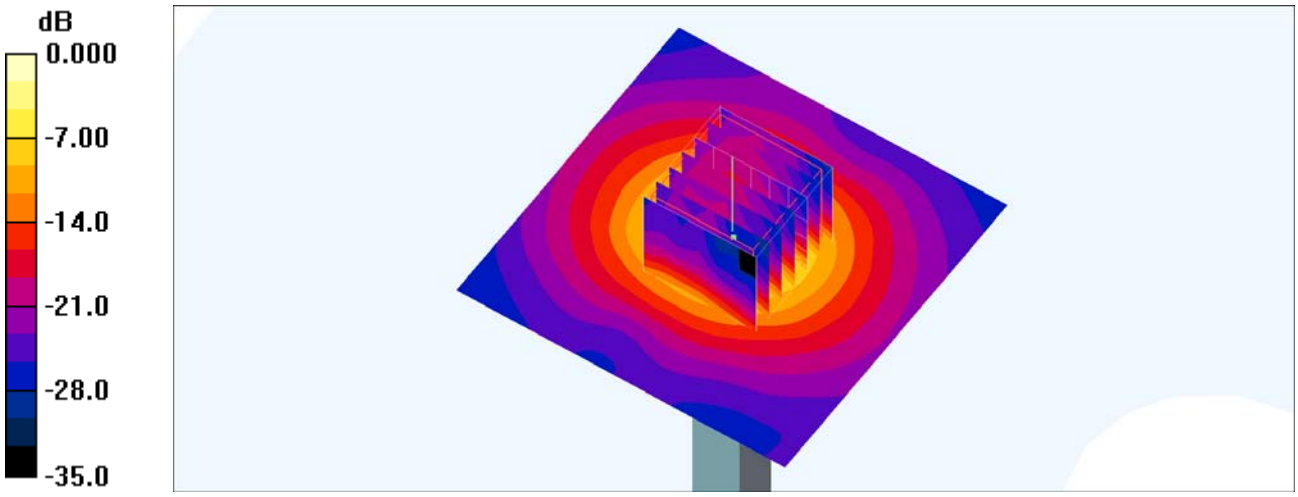

0 dB = 21.2mW/g

Test Laboratory: Sporton International Inc. SAR/HAC Testing Lab Date: 2017/5/30

System Check_Body_5750MHz

DUT: D5GHzV2-1006

Communication System: CW; Frequency: 5750 MHz;Duty Cycle: 1:1
Medium: MSL_5G_170530 Medium parameters used: f = 5750 MHz; σ = 6.05 mho/m; ε_r = 46.1; ρ = 1000 kg/m^3
Ambient Temperature：23.5 ℃; Liquid Temperature：22.5 ℃

DASY4 Configuration:
- Probe: EX3DV4 - SN3955; ConvF(4.12, 4.12, 4.12); Calibrated: 2016/11/24
- Sensor-Surface: 1.4mm (Mechanical Surface Detection)
- Electronics: DAE4 Sn1399; Calibrated: 2016/11/17
- Phantom: SAM_Right; Type: QD000P40CD; Serial: TP:1815
- ;Postprocessing SW: SEMCAD, V1.8 Build 159

Pin=100mW/Area Scan (71x71x1): Measurement grid: dx=10mm, dy=10mm
Maximum value of SAR (interpolated) = 26.2 mW/g

Pin=100mW/Zoom Scan (7x7x7)/Cube 0: Measurement grid: dx=4mm, dy=4mm, dz=1.4mm
Reference Value = 62.7 V/m; Power Drift = -0.122 dB
Peak SAR (extrapolated) = 32.0 W/kg
SAR(1 g) = 7.31 mW/g; SAR(10 g) = 1.97 mW/g
Maximum value of SAR (measured) = 18.9 mW/g

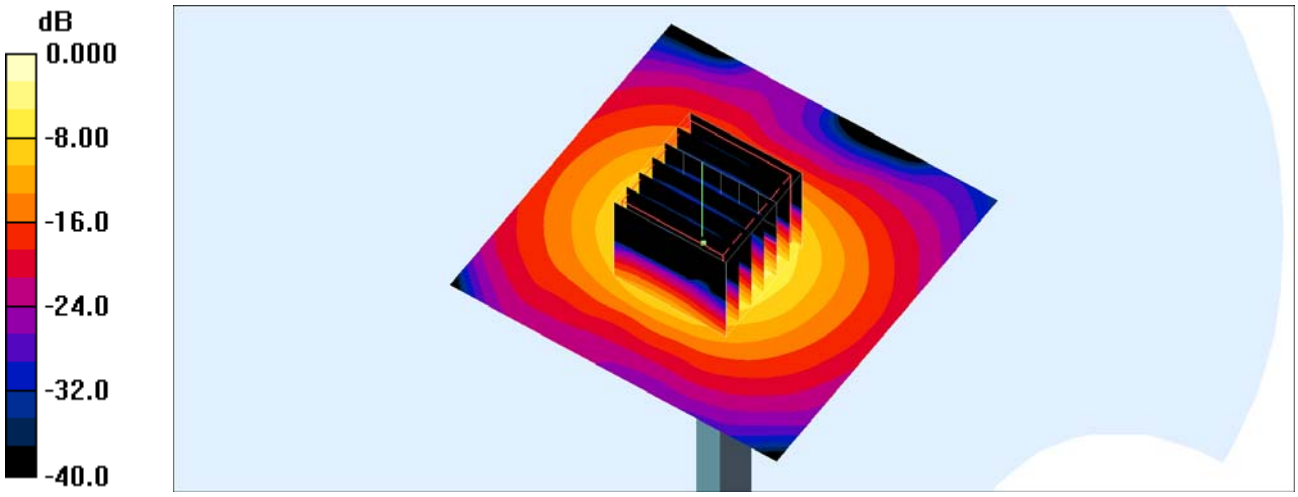

0 dB = 18.9mW/g