System Check_Head_750MHz

DUT: D750V3-1107

Communication System: CW ; Frequency: 750 MHz;Duty Cycle: 1:1
Medium: HSL_750_200130 Medium parameters used: f = 750 MHz; σ = 0.903 S/m; ε_r = 40.705; ρ = 1000 kg/m^3
Ambient Temperature：23.7 ℃; Liquid Temperature：22.7 ℃

DASY5 Configuration:
- Probe: EX3DV4 - SN3642; ConvF(9.16, 9.16, 9.16) @ 750 MHz; Calibrated: 2019/4/29
- Sensor-Surface: 1.4mm (Mechanical Surface Detection)
- Electronics: DAE4 Sn854; Calibrated: 2019/5/21
- Phantom: SAM_Left; Type: QD000P40CD; Serial: TP:1682
- Measurement SW: DASY52, Version 52.10 (2);SEMCAD X Version 14.6.12 (7470)

Pin=250mW/Area Scan (61x61x1): Interpolated grid: dx=1.500 mm, dy=1.500 mm
Maximum value of SAR (interpolated) = 2.72 W/kg

Pin=250mW/Zoom Scan (5x5x7)/Cube 0: Measurement grid: dx=8mm, dy=8mm, dz=5mm
Reference Value = 59.35 V/m; Power Drift = -0.02 dB
Peak SAR (extrapolated) = 3.24 W/kg
SAR(1 g) = 2.18 W/kg; SAR(10 g) = 1.43 W/kg
Maximum value of SAR (measured) = 2.89 W/kg

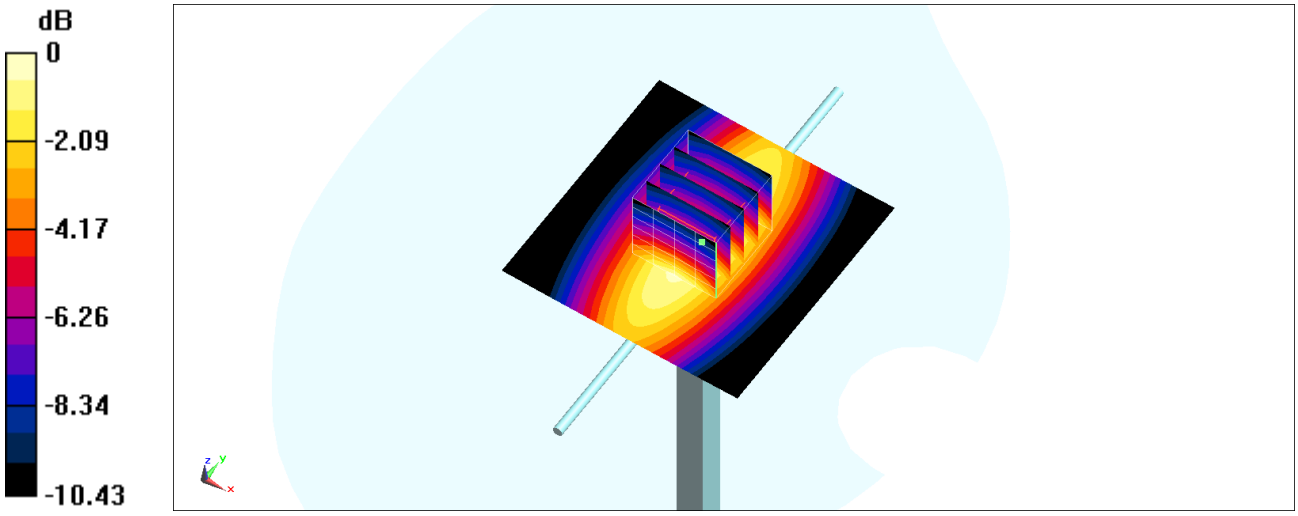

0 dB = 2.89 W/kg = 4.61 dBW/kg

System Check_Head_835MHz

DUT: D835V2-4d167

Communication System: CW; Frequency: 835 MHz;Duty Cycle: 1:1
Medium: HSL_835_200123 Medium parameters used: f = 835 MHz; σ = 0.916 S/m; ε_r = 40.919; ρ = 1000 kg/m^3
Ambient Temperature：23.9 ℃; Liquid Temperature：22.9 ℃

DASY5 Configuration:
- Probe: EX3DV4 - SN3642; ConvF(9.05, 9.05, 9.05) @ 835 MHz; Calibrated: 2019/4/29
- Sensor-Surface: 1.4mm (Mechanical Surface Detection)
- Electronics: DAE4 Sn854; Calibrated: 2019/5/21
- Phantom: SAM_Left; Type: QD000P40CD; Serial: TP:1682
- Measurement SW: DASY52, Version 52.10 (2);SEMCAD X Version 14.6.12 (7470)

Pin=250mW/Area Scan (61x61x1): Interpolated grid: dx=1.500 mm, dy=1.500 mm
Maximum value of SAR (interpolated) = 3.39 W/kg

Pin=250mW/Zoom Scan (5x5x7)/Cube 0: Measurement grid: dx=8mm, dy=8mm, dz=5mm
Reference Value = 63.95 V/m; Power Drift = -0.09 dB
Peak SAR (extrapolated) = 3.76 W/kg
SAR(1 g) = 2.5 W/kg; SAR(10 g) = 1.64 W/kg
Maximum value of SAR (measured) = 3.35 W/kg

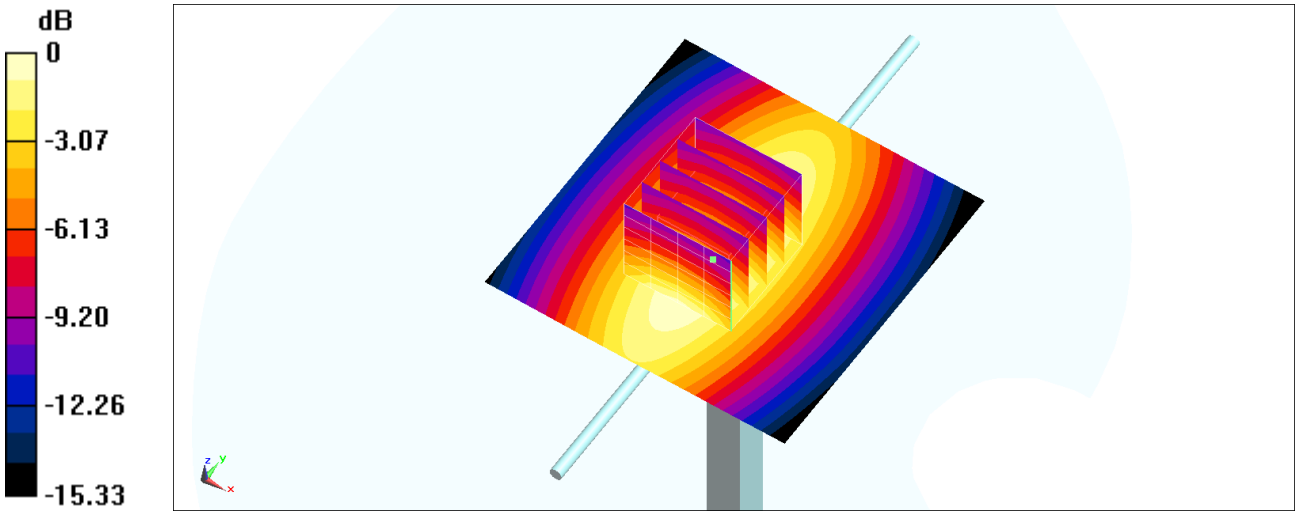

0 dB = 3.35 W/kg = 5.25 dBW/kg

System Check_Head_835MHz

DUT: D835V2-4d167

Communication System: CW; Frequency: 835 MHz;Duty Cycle: 1:1
Medium: HSL_850_200131 Medium parameters used: f = 835 MHz; σ = 0.913 S/m; ε_r = 40.761; ρ = 1000 kg/m^3
Ambient Temperature：23.6 ℃; Liquid Temperature：22.6 ℃

DASY5 Configuration:
- Probe: EX3DV4 - SN3642; ConvF(9.05, 9.05, 9.05) @ 835 MHz; Calibrated: 2019/4/29
- Sensor-Surface: 1.4mm (Mechanical Surface Detection)
- Electronics: DAE4 Sn854; Calibrated: 2019/5/21
- Phantom: SAM_Left; Type: QD000P40CD; Serial: TP:1682
- Measurement SW: DASY52, Version 52.10 (2);SEMCAD X Version 14.6.12 (7470)

Pin=250mW/Area Scan (61x61x1): Interpolated grid: dx=1.500 mm, dy=1.500 mm
Maximum value of SAR (interpolated) = 3.38 W/kg

Pin=250mW/Zoom Scan (5x5x7)/Cube 0: Measurement grid: dx=8mm, dy=8mm, dz=5mm
Reference Value = 63.95 V/m; Power Drift = -0.07 dB
Peak SAR (extrapolated) = 3.74 W/kg
SAR(1 g) = 2.49 W/kg; SAR(10 g) = 1.63 W/kg
Maximum value of SAR (measured) = 3.34 W/kg

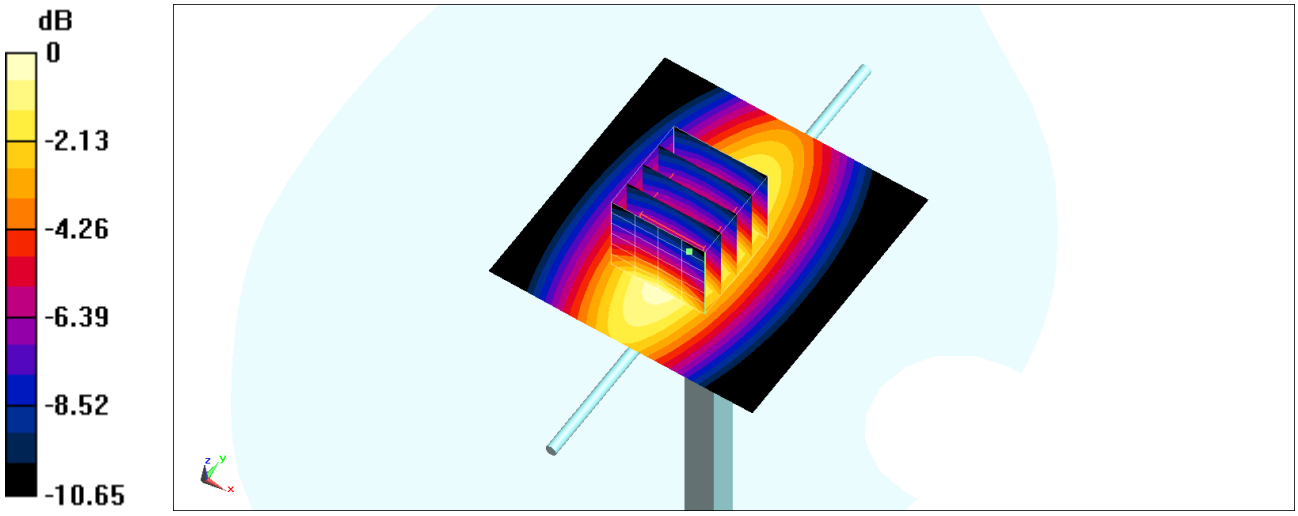

0 dB = 3.34 W/kg = 5.24 dBW/kg

System Check_Head_1750MHz

DUT: D1750V2-1112

Communication System: CW; Frequency: 1750 MHz;Duty Cycle: 1:1
Medium: HSL_1750_200203 Medium parameters used: f = 1750 MHz; σ = 1.378 S/m; ε_r = 40.711; ρ = 1000 kg/m^3
Ambient Temperature：23.6 ℃; Liquid Temperature：22.6 ℃

DASY5 Configuration:
- Probe: EX3DV4 - SN7346; ConvF(8.5, 8.5, 8.5) @ 1750 MHz; Calibrated: 2019/4/25
- Sensor-Surface: 1.4mm (Mechanical Surface Detection)
- Electronics: DAE4 Sn853; Calibrated: 2019/7/18
- Phantom: SAM_Left; Type: QD000P40CD; Serial: TP:1477
- Measurement SW: DASY52, Version 52.10 (2);SEMCAD X Version 14.6.12 (7470)

Pin=250mW/Area Scan (61x61x1): Interpolated grid: dx=1.500 mm, dy=1.500 mm
Maximum value of SAR (interpolated) = 14.8 W/kg

Pin=250mW/Zoom Scan (5x5x7)/Cube 0: Measurement grid: dx=8mm, dy=8mm, dz=5mm
Reference Value = 101.7 V/m; Power Drift = -0.11 dB
Peak SAR (extrapolated) = 16.0 W/kg
SAR(1 g) = 8.92 W/kg; SAR(10 g) = 4.8 W/kg
Maximum value of SAR (measured) = 13.5 W/kg

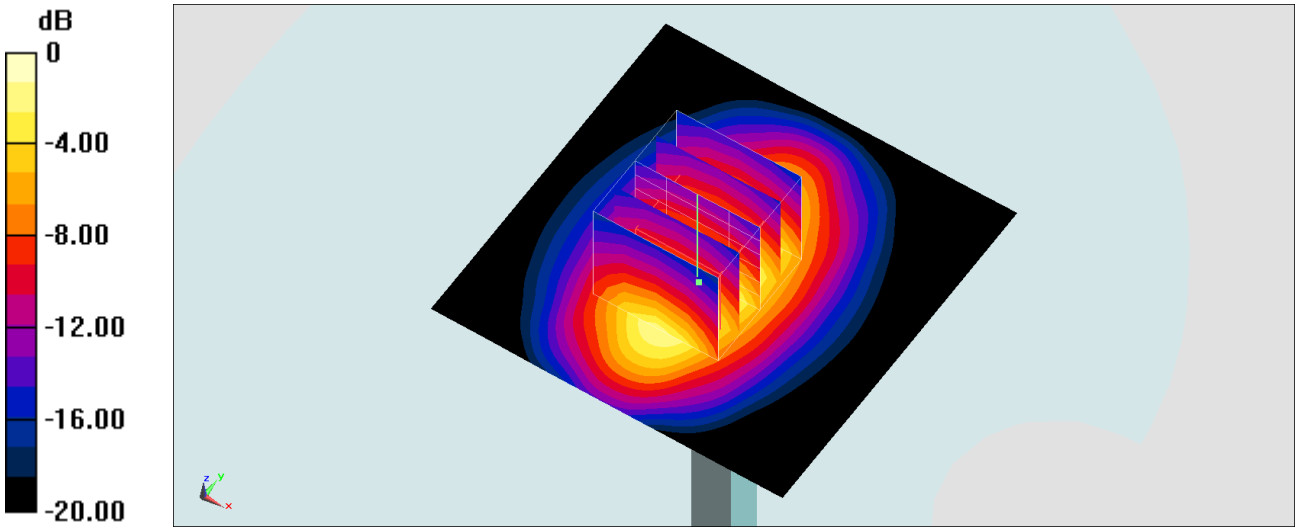

0 dB = 13.5 W/kg = 11.30 dBW/kg

System Check_Head_1750MHz

DUT: D1750V2-1112

Communication System: CW; Frequency: 1750 MHz;Duty Cycle: 1:1
Medium: HSL_1750_200204 Medium parameters used: f = 1750 MHz; σ = 1.345 S/m; ε_r = 40.571; ρ = 1000 kg/m^3
Ambient Temperature：23.6 ℃; Liquid Temperature：22.6 ℃

DASY5 Configuration:
- Probe: ES3DV3 - SN3184; ConvF(5.45, 5.45, 5.45) @ 1750 MHz; Calibrated: 2019/9/25
- Sensor-Surface: 3mm (Mechanical Surface Detection)
- Electronics: DAE4 Sn1305; Calibrated: 2019/4/30
- Phantom: SAM_Left; Type: QD000P40CD; Serial: TP:1684
- Measurement SW: DASY52, Version 52.10 (2);SEMCAD X Version 14.6.12 (7470)

Pin=250mW/Area Scan (61x61x1): Interpolated grid: dx=1.500 mm, dy=1.500 mm
Maximum value of SAR (interpolated) = 11.3 W/kg

Pin=250mW/Zoom Scan (5x5x7)/Cube 0: Measurement grid: dx=8mm, dy=8mm, dz=5mm
Reference Value = 89.35 V/m; Power Drift = 0.02 dB
Peak SAR (extrapolated) = 15.5 W/kg
SAR(1 g) = 8.66 W/kg; SAR(10 g) = 4.61 W/kg
Maximum value of SAR (measured) = 10.9 W/kg

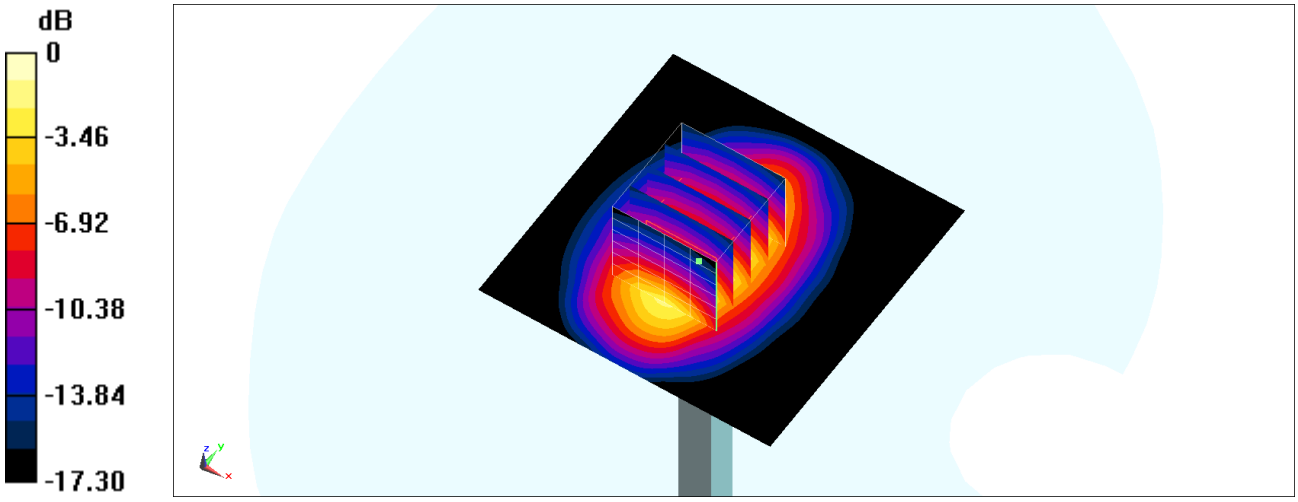

0 dB = 10.9 W/kg = 10.37 dBW/kg

System Check_Head_1900MHz

DUT: D1900V2-5d041

Communication System: CW; Frequency: 1900 MHz;Duty Cycle: 1:1
Medium: HSL_1900_200204 Medium parameters used: f = 1900 MHz; σ = 1.416 S/m; ε_r = 40.477; ρ = 1000 kg/m^3
Ambient Temperature：23.6 ℃; Liquid Temperature：22.6 ℃

DASY5 Configuration:
- Probe: ES3DV3 - SN3184; ConvF(5.23, 5.23, 5.23) @ 1900 MHz; Calibrated: 2019/9/25
- Sensor-Surface: 3mm (Mechanical Surface Detection)
- Electronics: DAE4 Sn1305; Calibrated: 2019/4/30
- Phantom: SAM_Left; Type: QD000P40CD; Serial: TP:1684
- Measurement SW: DASY52, Version 52.10 (2);SEMCAD X Version 14.6.12 (7470)

Pin=250mW/Area Scan (61x61x1): Interpolated grid: dx=1.500 mm, dy=1.500 mm
Maximum value of SAR (interpolated) = 13.5 W/kg

Pin=250mW/Zoom Scan (5x5x7)/Cube 0: Measurement grid: dx=8mm, dy=8mm, dz=5mm
Reference Value = 88.37 V/m; Power Drift = -0.06 dB
Peak SAR (extrapolated) = 16.2 W/kg
SAR(1 g) = 9.61 W/kg; SAR(10 g) = 5.13 W/kg
Maximum value of SAR (measured) = 10.9 W/kg

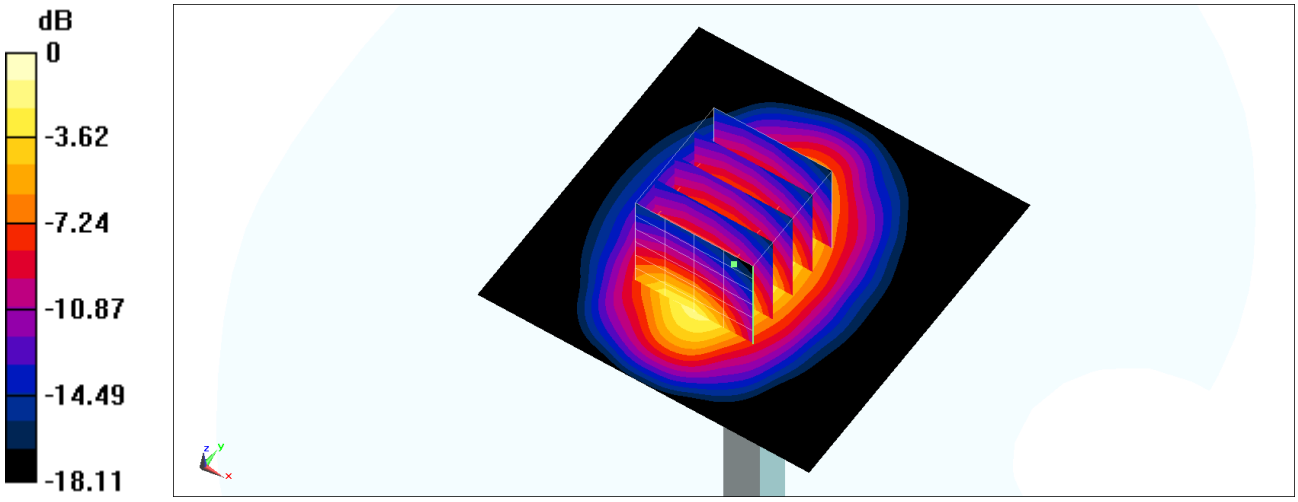

0 dB = 10.9 W/kg = 10.37 dBW/kg

System Check_Head_1900MHz

DUT: D1900V2-5d041

Communication System: CW; Frequency: 1900 MHz;Duty Cycle: 1:1
Medium: HSL_1900_200206 Medium parameters used: f = 1900 MHz; σ = 1.419 S/m; ε_r = 40.406; ρ = 1000 kg/m^3
Ambient Temperature：23.6 ℃; Liquid Temperature：22.6 ℃

DASY5 Configuration:
- Probe: EX3DV4 - SN7346; ConvF(8.07, 8.07, 8.07) @ 1900 MHz; Calibrated: 2019/4/25
- Sensor-Surface: 1.4mm (Mechanical Surface Detection)
- Electronics: DAE4 Sn853; Calibrated: 2019/7/18
- Phantom: SAM_Left; Type: QD000P40CD; Serial: TP:1477
- Measurement SW: DASY52, Version 52.10 (2);SEMCAD X Version 14.6.12 (7470)

Pin=250mW/Area Scan (61x61x1): Interpolated grid: dx=1.500 mm, dy=1.500 mm
Maximum value of SAR (interpolated) = 16.5 W/kg

Pin=250mW/Zoom Scan (5x5x7)/Cube 0: Measurement grid: dx=8mm, dy=8mm, dz=5mm
Reference Value = 106.3 V/m; Power Drift = 0.08 dB
Peak SAR (extrapolated) = 20.4 W/kg
SAR(1 g) = 10.6 W/kg; SAR(10 g) = 5.37 W/kg
Maximum value of SAR (measured) = 16.8 W/kg

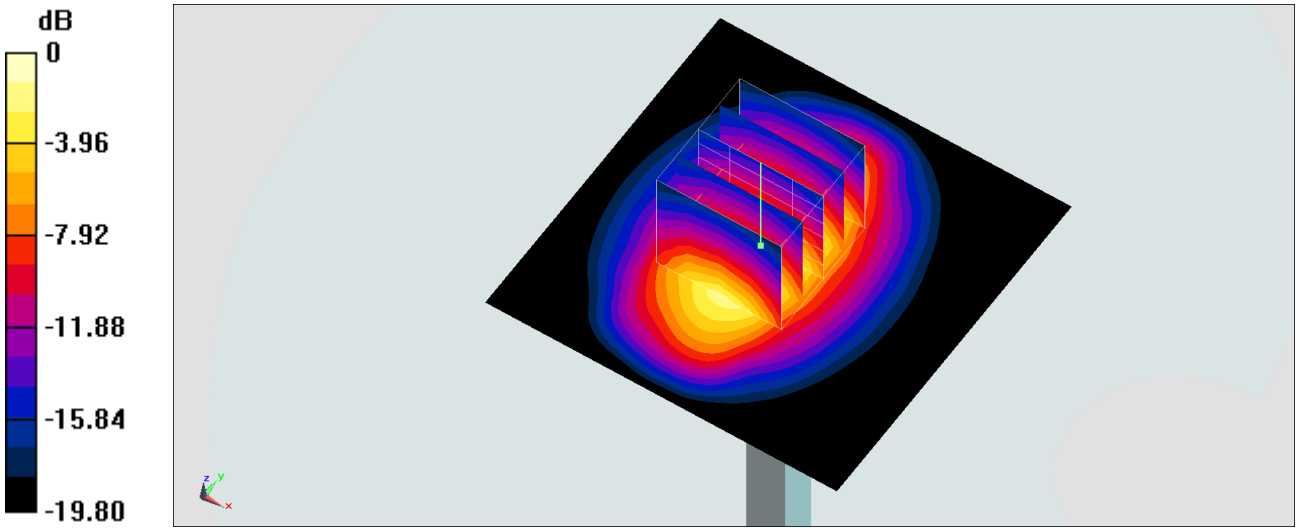

0 dB = 16.8 W/kg = 12.25 dBW/kg

System Check_Head_2450MHz

DUT: D2450V2-736

Communication System: CW; Frequency: 2450 MHz;Duty Cycle: 1:1
Medium: HSL_2450_200211 Medium parameters used: f = 2450 MHz; σ = 1.849 S/m; ε_r = 39.658; ρ = 1000 kg/m^3
Ambient Temperature：23.2 ℃; Liquid Temperature：22.2 ℃

DASY5 Configuration:
- Probe: EX3DV4 - SN3642; ConvF(7.32, 7.32, 7.32) @ 2450 MHz; Calibrated: 2019/4/29
- Sensor-Surface: 1.4mm (Mechanical Surface Detection)
- Electronics: DAE4 Sn854; Calibrated: 2019/5/21
- Phantom: SAM_Left; Type: QD000P40CD; Serial: TP:1682
- Measurement SW: DASY52, Version 52.10 (2);SEMCAD X Version 14.6.12 (7470)

Pin=250mW/Area Scan (71x71x1): Interpolated grid: dx=1.200 mm, dy=1.200 mm
Maximum value of SAR (interpolated) = 24.0 W/kg

Pin=250mW/Zoom Scan (7x7x7)/Cube 0: Measurement grid: dx=5mm, dy=5mm, dz=5mm
Reference Value = 115.6 V/m; Power Drift = 0.04 dB
Peak SAR (extrapolated) = 29.3 W/kg
SAR(1 g) = 13.9 W/kg; SAR(10 g) = 6.4 W/kg
Maximum value of SAR (measured) = 23.6 W/kg

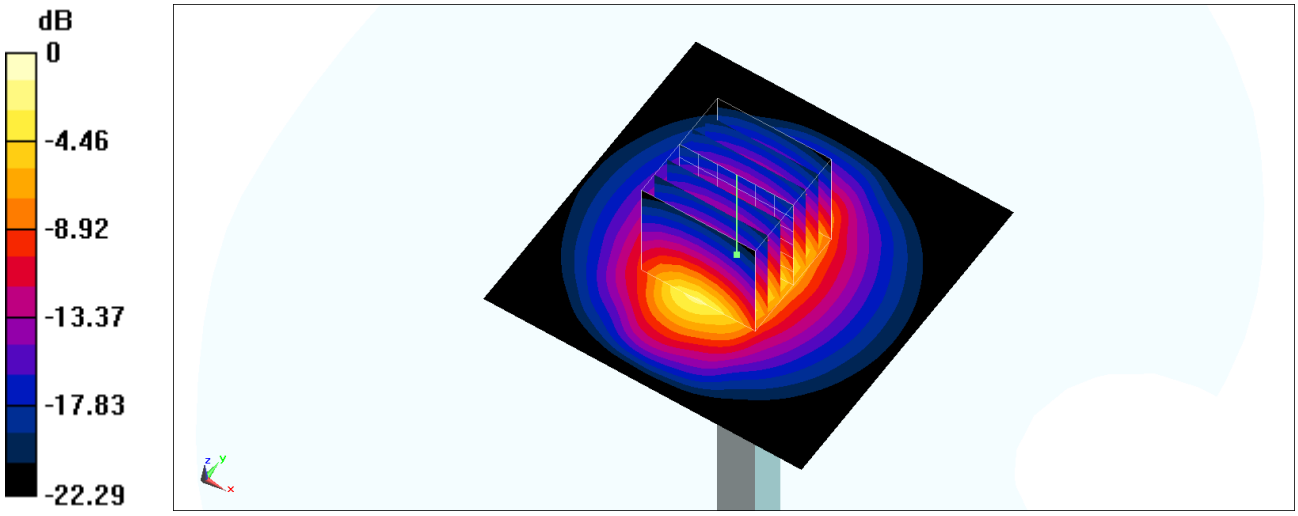

0 dB = 23.6 W/kg = 13.73 dBW/kg

System Check_Head_2600MHz

DUT: D2600V2-1078

Communication System: CW; Frequency: 2600 MHz;Duty Cycle: 1:1
Medium: HSL_2600_200122 Medium parameters used: f = 2600 MHz; σ = 1.983 S/m; ε_r = 39.454; ρ = 1000 kg/m^3
Ambient Temperature：23.4 ℃; Liquid Temperature：22.4 ℃

DASY5 Configuration:
- Probe: EX3DV4 - SN3642; ConvF(7.14, 7.14, 7.14) @ 2600 MHz; Calibrated: 2019/4/29
- Sensor-Surface: 1.4mm (Mechanical Surface Detection)
- Electronics: DAE4 Sn854; Calibrated: 2019/5/21
- Phantom: SAM_Left; Type: QD000P40CD; Serial: TP:1682
- Measurement SW: DASY52, Version 52.10 (2);SEMCAD X Version 14.6.12 (7470)

Pin=250mW/Area Scan (71x71x1): Interpolated grid: dx=1.200 mm, dy=1.200 mm
Maximum value of SAR (interpolated) = 21.4 W/kg

Pin=250mW/Zoom Scan (7x7x7)/Cube 0: Measurement grid: dx=5mm, dy=5mm, dz=5mm
Reference Value = 113.4 V/m; Power Drift = -0.01 dB
Peak SAR (extrapolated) = 29.6 W/kg
SAR(1 g) = 14.3 W/kg; SAR(10 g) = 6.53 W/kg
Maximum value of SAR (measured) = 24.0 W/kg

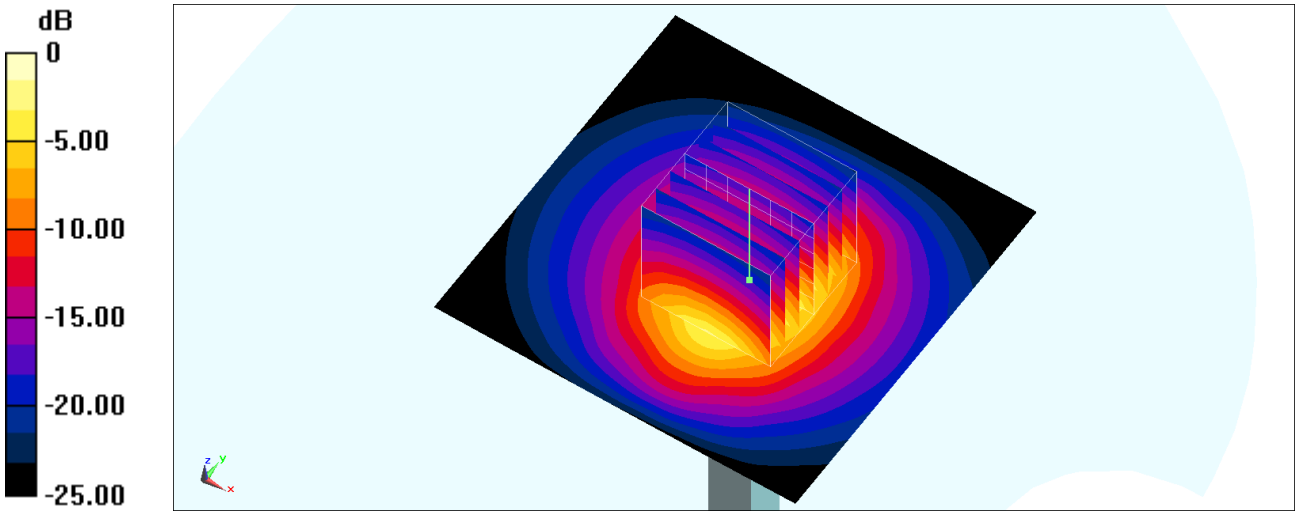

0 dB = 24.0 W/kg = 13.80 dBW/kg

System Check_Head_5250MHz

DUT: D5GHzV2-1006

Communication System: CW; Frequency: 5250 MHz;Duty Cycle: 1:1
Medium: HSL_5G_200201 Medium parameters used : f = 5250 MHz; σ = 4.718 S/m; ε_r = 36.093; ρ = 1000 kg/m^3
Ambient Temperature：23.4 ℃; Liquid Temperature：22.4 ℃

DASY5 Configuration:
- Probe: EX3DV4 - SN3642; ConvF(4.54, 4.54, 4.54) @ 5250 MHz; Calibrated: 2019/4/29
- Sensor-Surface: 1.4mm (Mechanical Surface Detection)
- Electronics: DAE4 Sn854; Calibrated: 2019/5/21
- Phantom: SAM_Right; Type: SAM; Serial: TP:1681
- Measurement SW: DASY52, Version 52.10 (2);SEMCAD X Version 14.6.12 (7470)

Pin=100mW/Area Scan (71x71x1): Interpolated grid: dx=1.000 mm, dy=1.000 mm
Maximum value of SAR (interpolated) = 24.2 W/kg

Pin=100mW/Zoom Scan (7x7x7)/Cube 0: Measurement grid: dx=4mm, dy=4mm, dz=1.4mm
Reference Value = 82.19 V/m; Power Drift = -0.19 dB
Peak SAR (extrapolated) = 35.6 W/kg
SAR(1 g) = 8.63 W/kg; SAR(10 g) = 2.44 W/kg
Maximum value of SAR (measured) = 22.0 W/kg

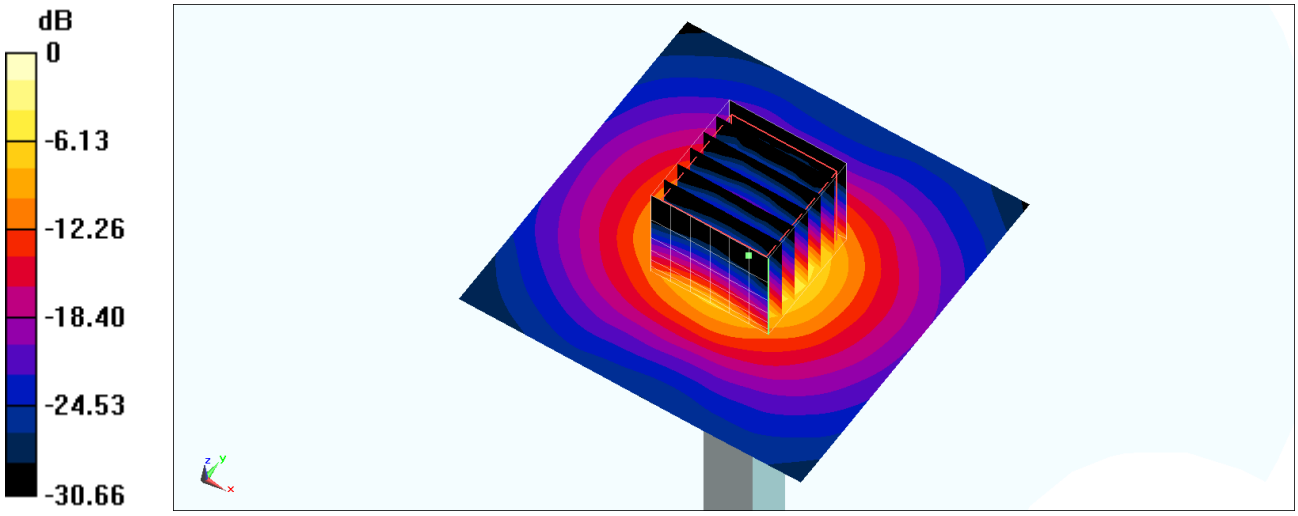

0 dB = 22.0 W/kg = 13.42 dBW/kg

System Check_Head_5250MHz

DUT: D5GHzV2-1006

Communication System: CW; Frequency: 5250 MHz;Duty Cycle: 1:1
Medium: HSL_5G_200202 Medium parameters used : f = 5250 MHz; σ = 4.68 S/m; ε_r = 35.847; ρ = 1000 kg/m^3
Ambient Temperature：23.3 ℃; Liquid Temperature：22.3 ℃

DASY5 Configuration:
- Probe: EX3DV4 - SN3642; ConvF(4.54, 4.54, 4.54) @ 5250 MHz; Calibrated: 2019/4/29
- Sensor-Surface: 1.4mm (Mechanical Surface Detection)
- Electronics: DAE4 Sn854; Calibrated: 2019/5/21
- Phantom: SAM_Right; Type: SAM; Serial: TP:1681
- Measurement SW: DASY52, Version 52.10 (2);SEMCAD X Version 14.6.12 (7470)

Pin=100mW/Area Scan (71x71x1): Interpolated grid: dx=1.000 mm, dy=1.000 mm
Maximum value of SAR (interpolated) = 24.0 W/kg

Pin=100mW/Zoom Scan (7x7x7)/Cube 0: Measurement grid: dx=4mm, dy=4mm, dz=1.4mm
Reference Value = 82.19 V/m; Power Drift = -0.19 dB
Peak SAR (extrapolated) = 35.3 W/kg
SAR(1 g) = 8.56 W/kg; SAR(10 g) = 2.42 W/kg
Maximum value of SAR (measured) = 21.8 W/kg

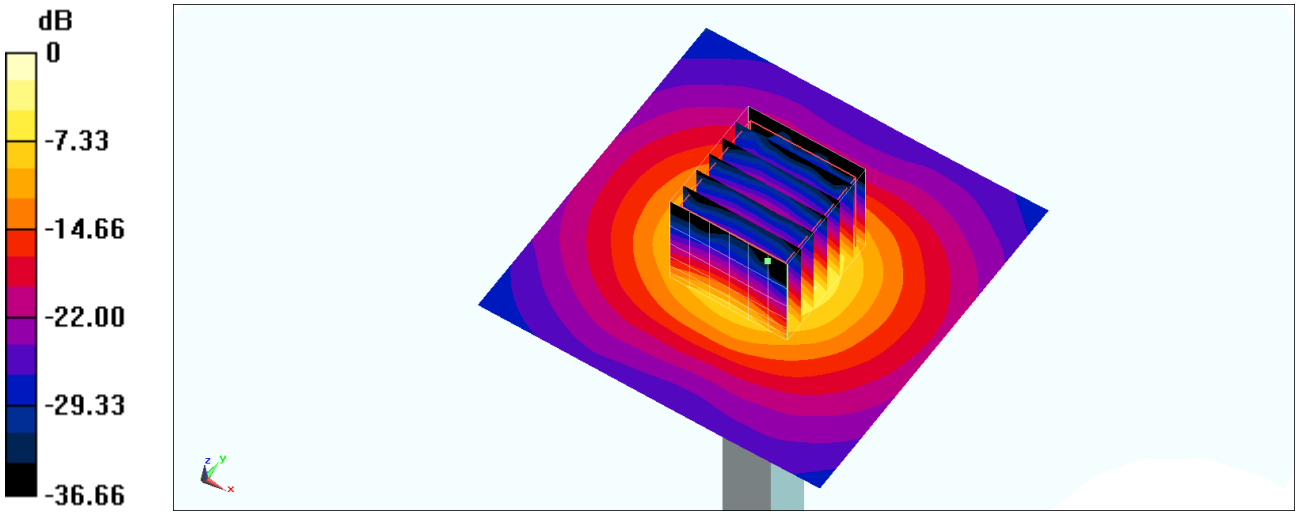

0 dB = 21.8 W/kg = 13.38 dBW/kg

System Check_Head_5250MHz

DUT: D5GHzV2-1006

Communication System: CW; Frequency: 5250 MHz;Duty Cycle: 1:1
Medium: HSL_5G_200210 Medium parameters used: f = 5250 MHz; σ = 4.695 S/m; ε_r = 35.897; ρ = 1000 kg/m^3
Ambient Temperature：23.5 ℃; Liquid Temperature：22.5 ℃

DASY5 Configuration:
- Probe: EX3DV4 - SN3642; ConvF(4.54, 4.54, 4.54) @ 5250 MHz; Calibrated: 2019/4/29
- Sensor-Surface: 1.4mm (Mechanical Surface Detection)
- Electronics: DAE4 Sn854; Calibrated: 2019/5/21
- Phantom: SAM_Right; Type: SAM; Serial: TP:1681
- Measurement SW: DASY52, Version 52.10 (2);SEMCAD X Version 14.6.12 (7470)

Pin=100mW/Area Scan (71x71x1): Interpolated grid: dx=1.000 mm, dy=1.000 mm
Maximum value of SAR (interpolated) = 24.1 W/kg

Pin=100mW/Zoom Scan (7x7x7)/Cube 0: Measurement grid: dx=4mm, dy=4mm, dz=1.4mm
Reference Value = 82.19 V/m; Power Drift = -0.05 dB
Peak SAR (extrapolated) = 35.5 W/kg
SAR(1 g) = 8.59 W/kg; SAR(10 g) = 2.43 W/kg
Maximum value of SAR (measured) = 21.9 W/kg

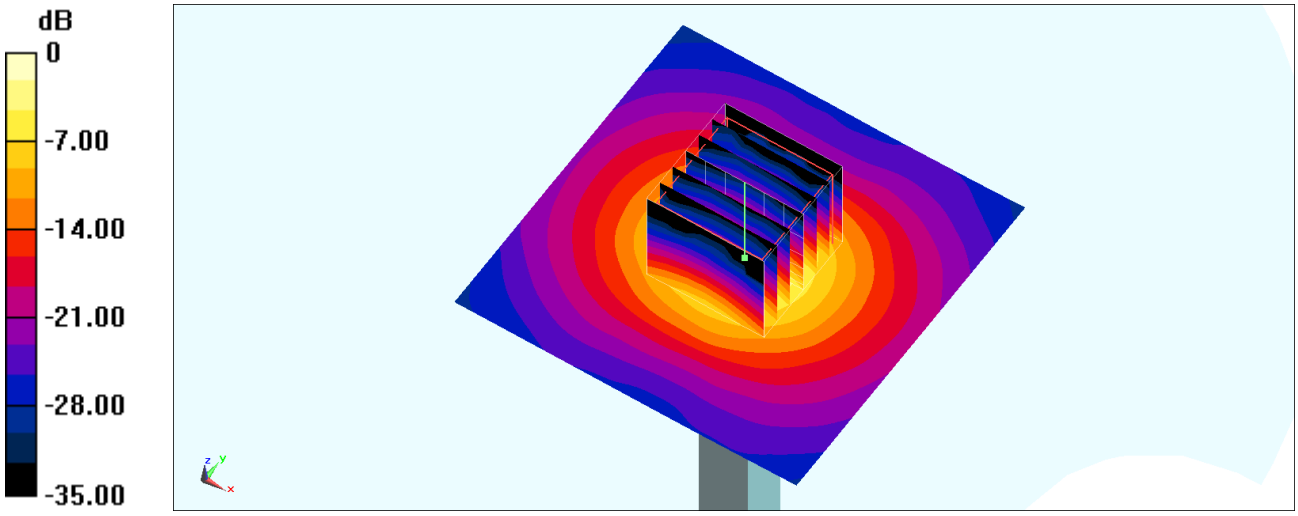

0 dB = 21.9 W/kg = 13.40 dBW/kg

System Check_Head_5600MHz

DUT: D5GHzV2-1006

Communication System: CW; Frequency: 5600 MHz;Duty Cycle: 1:1
Medium: HSL_5G_200201 Medium parameters used: f = 5600 MHz; σ = 5.069 S/m; ε_r = 35.543; ρ = 1000 kg/m^3
Ambient Temperature：23.4 ℃; Liquid Temperature：22.4 ℃

DASY5 Configuration:
- Probe: EX3DV4 - SN3642; ConvF(4.28, 4.28, 4.28) @ 5600 MHz; Calibrated: 2019/4/29
- Sensor-Surface: 1.4mm (Mechanical Surface Detection)
- Electronics: DAE4 Sn854; Calibrated: 2019/5/21
- Phantom: SAM_Right; Type: SAM; Serial: TP:1681
- Measurement SW: DASY52, Version 52.10 (2);SEMCAD X Version 14.6.12 (7470)

Pin=100mW/Area Scan (71x71x1): Interpolated grid: dx=1.000 mm, dy=1.000 mm
Maximum value of SAR (interpolated) = 23.3 W/kg

Pin=100mW/Zoom Scan (7x7x7)/Cube 0: Measurement grid: dx=4mm, dy=4mm, dz=1.4mm
Reference Value = 72.32 V/m; Power Drift = -0.18 dB
Peak SAR (extrapolated) = 37.8 W/kg
SAR(1 g) = 8.41 W/kg; SAR(10 g) = 2.28 W/kg
Maximum value of SAR (measured) = 21.3 W/kg

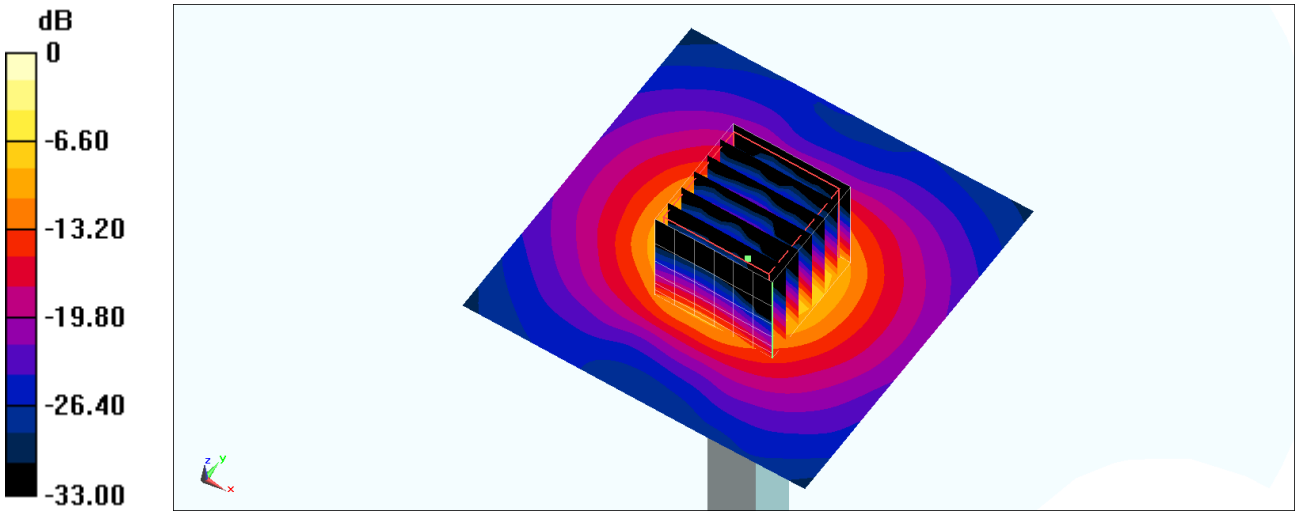

0 dB = 21.3 W/kg = 13.28 dBW/kg

System Check_Head_5600MHz

DUT: D5GHzV2-1006

Communication System: CW; Frequency: 5600 MHz;Duty Cycle: 1:1
Medium: HSL_5G_200202 Medium parameters used: f = 5600 MHz; σ = 5.028 S/m; ε_r = 35.297; ρ = 1000 kg/m^3
Ambient Temperature：23.3 ℃; Liquid Temperature：22.3 ℃

DASY5 Configuration:
- Probe: EX3DV4 - SN3642; ConvF(4.28, 4.28, 4.28) @ 5600 MHz; Calibrated: 2019/4/29
- Sensor-Surface: 1.4mm (Mechanical Surface Detection)
- Electronics: DAE4 Sn854; Calibrated: 2019/5/21
- Phantom: SAM_Right; Type: SAM; Serial: TP:1681
- Measurement SW: DASY52, Version 52.10 (2);SEMCAD X Version 14.6.12 (7470)

Pin=100mW/Area Scan (71x71x1): Interpolated grid: dx=1.000 mm, dy=1.000 mm
Maximum value of SAR (interpolated) = 23.1 W/kg

Pin=100mW/Zoom Scan (7x7x7)/Cube 0: Measurement grid: dx=4mm, dy=4mm, dz=1.4mm
Reference Value = 72.32 V/m; Power Drift = -0.17 dB
Peak SAR (extrapolated) = 37.5 W/kg
SAR(1 g) = 8.34 W/kg; SAR(10 g) = 2.26 W/kg
Maximum value of SAR (measured) = 21.2 W/kg

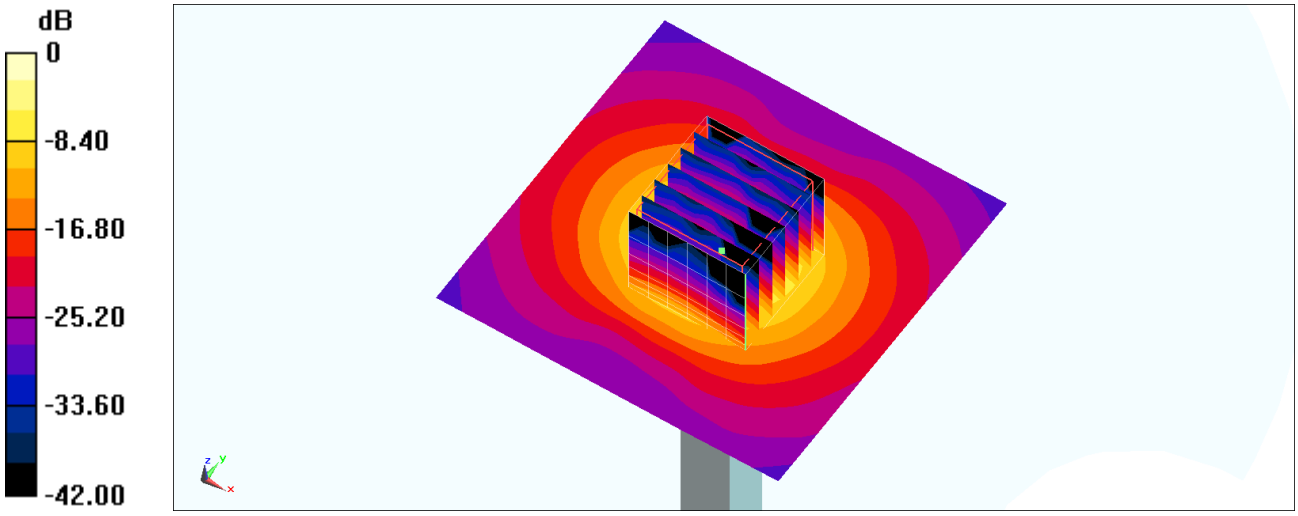

0 dB = 21.2 W/kg = 13.26 dBW/kg

System Check_Head_5600MHz

DUT: D5GHzV2-1006

Communication System: CW; Frequency: 5600 MHz;Duty Cycle: 1:1
Medium: HSL_5G_200210 Medium parameters used: f = 5600 MHz; σ = 5.044 S/m; ε_r = 35.347; ρ = 1000 kg/m^3
Ambient Temperature：23.5 ℃; Liquid Temperature：22.5 ℃

DASY5 Configuration:
- Probe: EX3DV4 - SN3642; ConvF(4.28, 4.28, 4.28) @ 5600 MHz; Calibrated: 2019/4/29
- Sensor-Surface: 1.4mm (Mechanical Surface Detection)
- Electronics: DAE4 Sn854; Calibrated: 2019/5/21
- Phantom: SAM_Right; Type: SAM; Serial: TP:1681
- Measurement SW: DASY52, Version 52.10 (2);SEMCAD X Version 14.6.12 (7470)

Pin=100mW/Area Scan (71x71x1): Interpolated grid: dx=1.000 mm, dy=1.000 mm
Maximum value of SAR (interpolated) = 23.2 W/kg

Pin=100mW/Zoom Scan (7x7x7)/Cube 0: Measurement grid: dx=4mm, dy=4mm, dz=1.4mm
Reference Value = 72.32 V/m; Power Drift = -0.15 dB
Peak SAR (extrapolated) = 37.6 W/kg
SAR(1 g) = 8.36 W/kg; SAR(10 g) = 2.27 W/kg
Maximum value of SAR (measured) = 21.2 W/kg

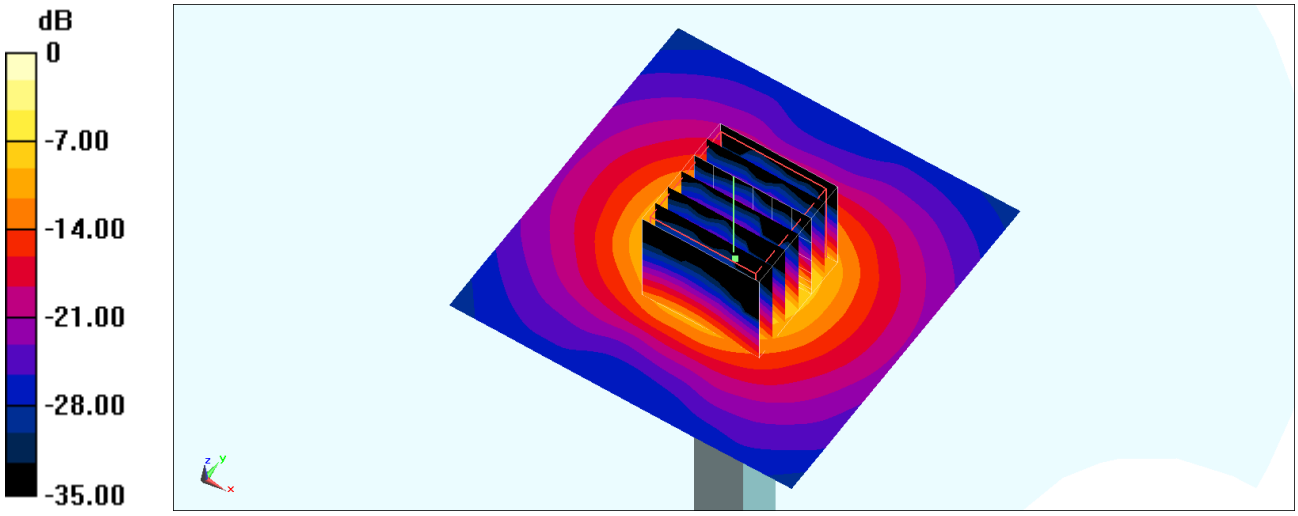

0 dB = 21.2 W/kg = 13.26 dBW/kg

System Check_Head_5750MHz

DUT: D5GHzV2-1006

Communication System: CW ; Frequency: 5750 MHz;Duty Cycle: 1:1
Medium: HSL_5G_200201 Medium parameters used: f = 5750 MHz; σ = 5.215 S/m; ε_r = 35.401; ρ = 1000 kg/m^3
Ambient Temperature：23.4 ℃; Liquid Temperature：22.4 ℃

DASY5 Configuration:
- Probe: EX3DV4 - SN3642; ConvF(4.36, 4.36, 4.36) @ 5750 MHz; Calibrated: 2019/4/29
- Sensor-Surface: 1.4mm (Mechanical Surface Detection)
- Electronics: DAE4 Sn854; Calibrated: 2019/5/21
- Phantom: SAM_Right; Type: SAM; Serial: TP:1681
- Measurement SW: DASY52, Version 52.10 (2);SEMCAD X Version 14.6.12 (7470)

Pin=100mW/Area Scan (71x71x1): Interpolated grid: dx=1.000 mm, dy=1.000 mm
Maximum value of SAR (interpolated) = 21.7 W/kg

Pin=100mW/Zoom Scan (7x7x7)/Cube 0: Measurement grid: dx=4mm, dy=4mm, dz=1.4mm
Reference Value = 72.38 V/m; Power Drift = -0.06 dB
Peak SAR (extrapolated) = 39.2 W/kg
SAR(1 g) = 8.38 W/kg; SAR(10 g) = 2.35 W/kg
Maximum value of SAR (measured) = 22.4 W/kg

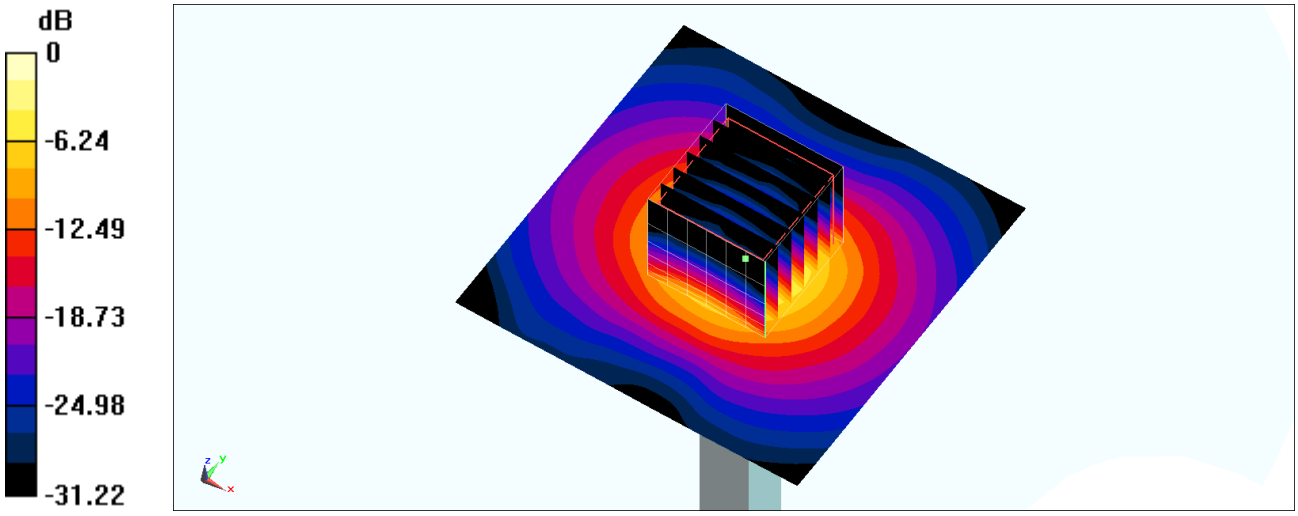

0 dB = 22.4 W/kg = 13.50 dBW/kg

System Check_Head_5750MHz

DUT: D5GHzV2-1006

Communication System: CW ; Frequency: 5750 MHz;Duty Cycle: 1:1
Medium: HSL_5G_200202 Medium parameters used: f = 5750 MHz; σ = 5.173 S/m; ε_r = 35.155; ρ = 1000 kg/m^3
Ambient Temperature：23.3 ℃; Liquid Temperature：22.3 ℃

DASY5 Configuration:
- Probe: EX3DV4 - SN3642; ConvF(4.36, 4.36, 4.36) @ 5750 MHz; Calibrated: 2019/4/29
- Sensor-Surface: 1.4mm (Mechanical Surface Detection)
- Electronics: DAE4 Sn854; Calibrated: 2019/5/21
- Phantom: SAM_Right; Type: SAM; Serial: TP:1681
- Measurement SW: DASY52, Version 52.10 (2);SEMCAD X Version 14.6.12 (7470)

Pin=100mW/Area Scan (71x71x1): Interpolated grid: dx=1.000 mm, dy=1.000 mm
Maximum value of SAR (interpolated) = 21.6 W/kg

Pin=100mW/Zoom Scan (7x7x7)/Cube 0: Measurement grid: dx=4mm, dy=4mm, dz=1.4mm
Reference Value = 72.38 V/m; Power Drift = -0.09 dB
Peak SAR (extrapolated) = 38.9 W/kg
SAR(1 g) = 8.31 W/kg; SAR(10 g) = 2.33 W/kg
Maximum value of SAR (measured) = 22.2 W/kg

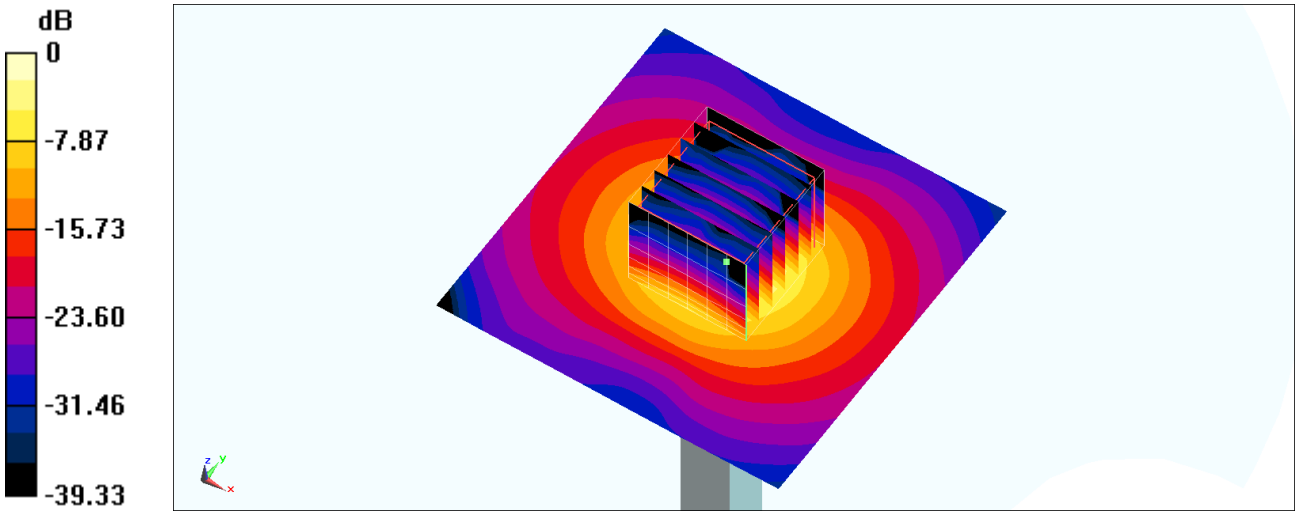

0 dB = 22.2 W/kg = 13.46 dBW/kg

System Check_Head_5750MHz

DUT: D5GHzV2-1006

Communication System: CW ; Frequency: 5750 MHz;Duty Cycle: 1:1
Medium: HSL_5G_200210 Medium parameters used: f = 5750 MHz; σ = 5.189 S/m; ε_r = 35.205; ρ = 1000 kg/m^3
Ambient Temperature：23.5 ℃; Liquid Temperature：22.5 ℃

DASY5 Configuration:
- Probe: EX3DV4 - SN3642; ConvF(4.36, 4.36, 4.36) @ 5750 MHz; Calibrated: 2019/4/29
- Sensor-Surface: 1.4mm (Mechanical Surface Detection)
- Electronics: DAE4 Sn854; Calibrated: 2019/5/21
- Phantom: SAM_Right; Type: SAM; Serial: TP:1681
- Measurement SW: DASY52, Version 52.10 (2);SEMCAD X Version 14.6.12 (7470)

Pin=100mW/Area Scan (71x71x1): Interpolated grid: dx=1.000 mm, dy=1.000 mm
Maximum value of SAR (interpolated) = 21.6 W/kg

Pin=100mW/Zoom Scan (7x7x7)/Cube 0: Measurement grid: dx=4mm, dy=4mm, dz=1.4mm
Reference Value = 72.38 V/m; Power Drift = -0.04 dB
Peak SAR (extrapolated) = 39.0 W/kg
SAR(1 g) = 8.34 W/kg; SAR(10 g) = 2.34 W/kg
Maximum value of SAR (measured) = 22.3 W/kg

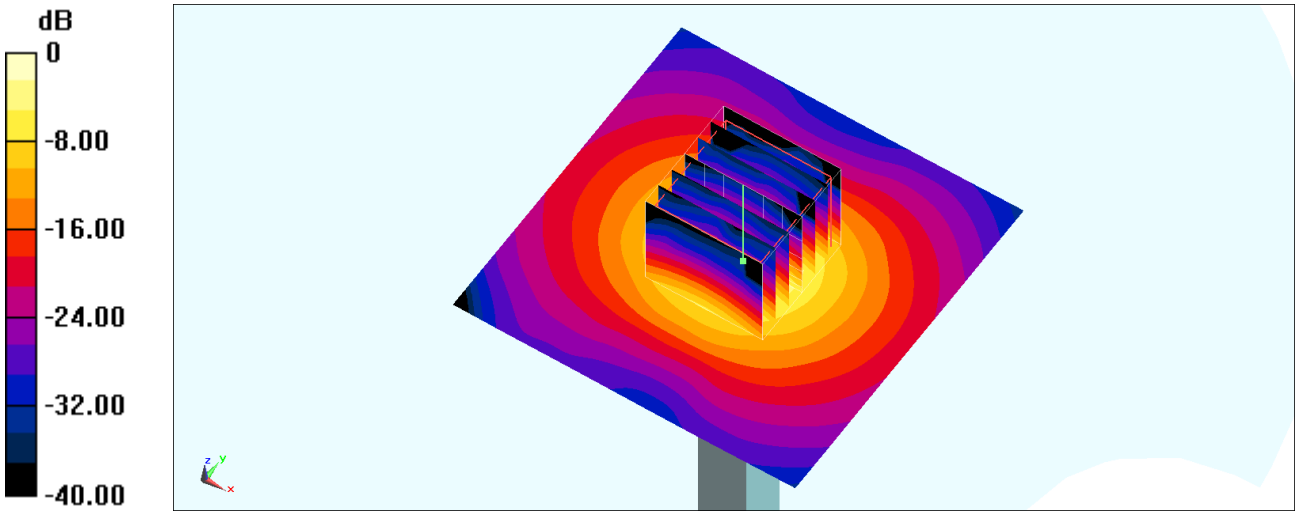

0 dB = 22.3 W/kg = 13.48 dBW/kg