NTT docomo

XPERIA XXxx xxxxxx

INSTRUCTION MANUAL

Introduction

Thank you for your purchase of "XXXXXX".
For proper use of the XXXXXX read this manual carefully before and while you use the XXXXXX.

About manuals

● "クイックスタートガイド (Quick Start Guide)" (Supplied accessories)
Part names and functions are explained.

● "Instruction Manual" application (Application of the terminal) (in Japanese only)
Operations and settings of each function are explained.
You can search by free word, open a setting screen or launch an application from a displayed page, etc. Use the terminal more conveniently with this application.

[How to use]
From the Home screen, ▶[Instruction Manual].

- When using for the first time, download and install the application according to the onscreen instructions.
- You can also call up "Instruction Manual" application from "my daiz".

- If you uninstall "Instruction Manual" application, access Google Play from Play Store for installing it again. From the Home screen, tap [Play Store], search "取扱説明書 (Instruction Manual)" application to select, then operate it following the onscreen instructions.

● "Instruction Manual" (PDF file)
Operations and settings of each function are explained.
It can be downloaded from NTT DOCOMO website.

❖Note

- Important information for XXXXXX is posted in the following website. Be sure to check before using.
https://xperia.sony.jp/support/ (in Japanese only)

Operation descriptions

In this manual, key icons (P.55) are described as ◀, ●, □.
And operations for selecting icons or items in the key operations on the screens are described as follows.

Description	Operation
Press and hold the power key for at least 1 second.	Press and hold the power key on the side of the terminal for at least 1 second.
From the Home screen, ▶ .	From the Home screen, tap , and then tap on the next screen.
From the Home screen, ▶ [Settings]▶ [Display].	From the Home screen, tap , and then tap "Settings" on the next screen and "Display" on the following screen.
Touch and hold an icon.	Keep touching an icon longer (1-2 seconds).

❖Information

- Please note that "XXXXXX" is called as "the terminal" in this manual.
- In this manual, the description is written based on the default state.

- In this manual, the easier procedure is described for the functions and settings which have multiple operating procedures.
- The terminal may have a software update of the operating system (OS) for the purpose of quality improvement or addition of functions. In that case, operation procedure may change. For the information about addition of functions or change of operation procedure, refer to NTT DOCOMO website And some applications that used in the previous OS version may not be available or some unintended bugs may occur.
- Some applications or services may not be available depending on your contract. For details, refer to NTT DOCOMO website.
- Contact to DOCOMO varies by your contract. For details on Inquiries, refer to the last page.
- In this manual, explanations for "docomo LIVE UX" as Home application are provided (P.81). If you set the other home application, the operations may differ from the descriptions.
- The contents of this manual and written URL are subject to change without prior notice.
- Screens and illustrations used in this manual are just images for explanations and may be different from the actual ones of the product.
- Reproduction or reprint of all or part of this manual without prior permission is prohibited.

Supplied accessories

- XXXXXX

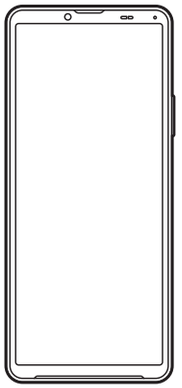

- クイックスタートガイド (Quick Start Guide) (in Japanese only)

- ご利用にあたっての注意事項 (Notes on usage) (in Japanese only)

You can check or purchase optional devices (optional) compatible with the terminal in the DOCOMO online shop.
https://onlineshop.smt.docomo.ne.jp/options/search.html (in Japanese only)

Contents

■ **Supplied accessories** 1

Precautions 4

About using the terminal 4
Recommended features 7
Safety Precautions (Always follow these directions) 8
Handling precautions 18
Waterproofness/Dustproofness 26

Before using the terminal 32

Part names and functions 32
nano SIM card 33
microSD card 36
Charging 39
FCC ID 43
Turning power on/off 43
Initial settings 45
Security codes for the terminal 47

Basic operations 50

Basic operations 50
Character entry 59
Notification LED 65
Screen display and the icons 65
Task manager 71
Split screen 71
Pop-up window 73
SuguApp 75
One-handed mode 79
Searching website information etc. 80

Home screen 81

Switching the home app 81
docomo LIVE UX 81
Xperia Home screen 89
Simple Home screen 92
Application screen 95
Application list 97

Phone/Phonebook 103

Making/Receiving a call 103
Operations during a call 107
Call history 108
Call settings 111
Accessibility 112
Phonebook 112

Mail/Web browser 117

docomo mail 117
+Message 117
Gmail 123
Early Warning "Area Mail" 124
Chrome 125

Camera/Photos 129

Camera 129
Photos 141

Apps 142

dメニュー (dmenu) 142
dmarket 142
Play Store 143
Osaifu-Keitai 144
Music 148
Location services 149
Schedule 151
Clock 153
docomo Data Copy 155

Settings 158

Viewing the Settings menu 158
Network & internet 159
Device connection 170
Apps 171
Notifications 173
Battery 175
Storage 176
Sound 177
Display 179
Appearance 182
Wallpaper 182
Accessibility 183
Security 185
Privacy 190
Location 191
Safety & emergency 192
docomo service/cloud 192
Passwords & accounts 193
Digital Wellbeing & parental controls 195
Google 195
System 196
About phone 201

File management 202

Storage structure 202
File operations 202

Data communication 204

Bluetooth function 204

External device connection 207

Connecting to PC 207

International roaming 208

Overview of International roaming (WORLD WING) 208
Available overseas service 208
Before using overseas 209
Making/Receiving a call in the place you stay 211
International roaming settings 214
After returning to Japan 216

Appendix 217

Troubleshooting 217
Software Update 225
Warranty and After Sales Services 228
Main specification 232
Certificate and compliance 235
Specific Absorption Rate of Mobile Phone, etc. 236
Export Controls and Regulations 240
Intellectual Property Right 241

Index 244

Precautions

About using the terminal

- The terminal is a SIM lock free phone that supports 5G, LTE, W-CDMA, GSM/GPRS and wireless LAN systems.
- Because the terminal uses radio frequencies, it is not available inside a tunnel, underground, building or other locations where radio waves do not reach, in a place with weak radio waves, or out of 5G service area or LTE service area. Also, it may not be available on the upper floors of high-rise apartments or buildings, even if there are no obstructions around you. Note that calls may be disconnected even when you stay without moving in areas with strong radio wave condition indicated with the 4-signal icon.
- Because the terminal uses radio waves to communicate, it is possible that a third party may attempt to tap your calls. However, the LTE, W-CDMA, GSM/GPRS system automatically scrambles all calls through a private call feature. Therefore, even if the third party successfully intercepts your call, they will only hear noise.
- The terminal operates on radio frequencies by converting voice into digital signals. If a caller moves into an area of poor radio wave condition, the digital signal may not be restored accurately, and the voice received in the call may differ slightly from the actual voice.
- The terminal supports the function which allows "User" or "Guest" to use the terminal. Therefore some services or applications recognize them as the same user even after the user is switched. DOCOMO shall have no liabilities for any damage or troubles of customer or a third party resulting from using the function (P.199).
- Note down the data saved to the terminal in a separate note on a regular basis or save to an external recording medium such as a microSD card or PC. Note that DOCOMO assumes no responsibility for any loss of saved data resulting from malfunction, repair, changing of the model or other handling of the terminal.
- Verify providers and operating conditions of applications, websites, etc. well before using them. Some user-installed applications or accessed websites may disrupt the stability of the terminal performance, or unexpectedly transmit information via the Internet causing improper use of your location information as well as personal information.

- The terminal automatically performs communication for synchronizing data, checking the latest software version, and maintaining a connection with the server, and for other purposes. If you transmit a large amount of data, such as when downloading applications or watching video, a packet communication charge becomes high. Subscription to Packet Pack/packet flat-rate service is highly recommended.
- In the initial setting, the applications provided by DOCOMO may be installed automatically. And that incurs the packet communication charge if you use mobile network. Such applications will be selected automatically by predicting your needs based on the information you have offered to DOCOMO upon your consent beforehand or your other information we hold. We manage how to handle your information in an appropriate manner defined by our privacy policy.
- Depending on the applications or services you are using, the packet communication charge may be incurred even when communicating via Wi-Fi®.
- If available memory in the microSD card or the internal storage is low, running applications may not operate correctly. In that case, delete the saved data.
- Set a password etc. for the screen lock to ensure the security of the terminal in case of loss (P.186).
- If your terminal is lost, change your each account password to invalidate authentication using a PC to prevent other persons from using Google services such as Gmail or Google Play, or SNS, etc.
- For using services and applications provided by the third party's including applications provided by Google LLC, confirm the terms and conditions, etc. specified by Google or the providers. DOCOMO assumes no responsibility for any malfunctions resulting from the services and applications.
- When a license agreement screen etc. appears, follow the onscreen instructions.
- Applications and service contents are subject to change without prior notice.
- For details on usage charge, refer to NTT DOCOMO website.
- Display is manufactured by taking advantage of highly advanced technology but some dots may be always or never lit. Note that, this shows characteristics of the display and not defects in the terminals.

- The terminal has an organic EL display. Although an afterimage may occur when the same image has been displayed for a long time, it is not a malfunction. To prevent the display from having afterimages, do not display the same image for a long time.
- The screen may become partially dark or the colors may be changed if you set the display brightness to brighter than necessary or use the terminal extremely for a long time. Also, unevenness of colors or brightness, or changes of colors may be found depending on direction you are looking. That is because of the structure of organic EL display, not a malfunction.
- DOCOMO is not liable to any failures or malfunctions for commercially available optional equipment.

Recommended features

Camera

You can activate the camera from the icon of the "Camera" application or the camera icon on the lock screen.
You can easily shoot beautiful photos just leaving it to the camera with the SUPERIOR AUTO function which automatically determines the scene and condition to select most suitable settings, Panorama which can frame vast scenery to compose smooth and natural finishes, Portrait selfie which allows you to adjust effects while shooting, etc.→ P.129

Audio (DSEE Ultimate)

It is the special AI technology of Sony, which improves expression in high sound area and reproducibility of subtle sound.
Use headphones compatible with high-resolution audio to scale up compressed sound source to high sound quality equivalent with high-resolution audio.→ P.177

Pop-up window

You can activate an application displaying the window over another application.
That allows you to operate another application while displaying information you want to keep watching.→P.73

For details of the features, refer to the Xperia™ website (https://xperia.sony.jp/myxperia/ (in Japanese only)).

Safety Precautions (Always follow these directions)

- For safe and proper use of the terminal, please read the "Safety Precautions" prior to use.
- ALWAYS observe the safety precautions since they intend to prevent personal injury or property damage.
- The following symbols indicate the different levels of injury or damage that may result if the guidelines are not observed and the terminal is used improperly.

⚠ **DANGER**	Failure to observe these guidelines may "immediately result in death or serious injury(*1)".
⚠ **WARNING**	Failure to observe these guidelines may "result in death or serious injury(*1)".
⚠ **CAUTION**	Failure to observe these guidelines may "result in minor injury(*2) and property damage(*3)".

*1 Serious injury: This refers to loss of sight, injury, burns (high- and low-temperature), electric shock, broken bones, injuries with residual aftereffects from poisoning, etc., and injuries requiring hospital admission for treatment or long-term hospital attendance as an outpatient.

*2 Minor injury: This refers to injuries, burns (high- and low-temperature), electric shock, etc. that do not require hospital admission for treatment or long-term hospital attendance as an outpatient.

*3 Property damage: This refers to extended damage to buildings, furniture, livestock, pets, etc.

- The following symbols indicate specific directions.

Don't	Indicates prohibited actions.
No disassembly	Indicates not to disassemble.
No liquids	Indicates not to use where it could get wet.
No wet hands	Indicates not to handle with wet hands.
Do	Indicates compulsory actions in accordance with instructions.
Unplug	Indicates to remove the power plug from the outlet.

1. Handling the terminal, adapter and nano SIM card (common)

⚠ DANGER

Don't

Do not use, store or leave the equipment in locations subject to high temperature or accumulation of heat (e.g. by the fire, near a heater, under a kotatsu or bedding, in direct sunlight, in a car in the hot sun).
Doing so may cause fire, burns, injury, electric shock, etc.

Don't

Do not put the equipment in or place near microwave ovens, cooking appliances such as IH cooking heaters, or high pressure containers such as pressure cookers.
Doing so may cause fire, burns, injury, electric shock, etc.

Don't

Do not splash sand, soil or mud, or do not directly place the equipment on them. Also, do not touch the equipment with hands with sand etc. adhered.
Doing so may cause fire, burns, injury, electric shock, etc.
For waterproofness/dustproofness, see the following.
⇒P.26 "Waterproofness/Dustproofness"

Don't

Do not charge the terminal when it is wet with liquids such as water (drinking water, sweat, seawater, urine of pet animals, etc.). Also, do not charge the terminal in a place where it possibly contacts water such as a bathroom or near a humidifier.
Doing so may cause fire, burns, injury, electric shock, etc.
For waterproofness, see the following.
⇒P.26 "Waterproofness/Dustproofness"

Don't

Do not subject the terminal to strong pressure or break the terminal. Especially when the terminal is in a pocket of clothes, do not let it hit against surroundings or put between the objects.
Doing so may cause fire, burns, injury, etc. because of damage of the internal battery.
* The following are examples that you should be careful of:
- Sitting or squatting with the terminal put in a pocket of trousers or skirt
- Letting your outer wear get caught in doors or a door of car when the terminal in the pocket
- Stepping on the terminal on a soft object such as a sofa, bed, or bedding, or on a floor
- Putting the terminal in a seat gap of train, bus, etc.

Don't

Do not attempt to remove the internal battery from the terminal.
Doing so may cause fire, burns, injury, electric shock, etc.

Don't

The back panel of the terminal cannot be removed. Do not attempt to remove it.
Doing so may cause fire, burns, injury, etc.

No disassembly

Do not disassemble or modify the equipment.
Doing so may cause fire, burns, injury, electric shock, etc.

No liquids

Do not let the equipment get wet with liquids such as water (drinking water, sweat, seawater, urine of pet animals, etc.).
Doing so may cause fire, burns, injury, electric shock, etc.
For waterproofness, see the following.
⇒P.26 "Waterproofness/Dustproofness"

No liquids

Do not allow liquids such as water (drinking water, sweat, seawater, urine of pet animals, etc.) to get inside of the charging jack or the external connection jack.
Doing so may cause fire, burns, injury, electric shock, etc.
For waterproofness, see the following.
⇒P.26 "Waterproofness/Dustproofness"

Do

Use optional devices specified by NTT DOCOMO.
Use of an unspecified device or device whose manufacturer, selling source, or specification is uncertain may cause fire, burns, electric shock, etc.

⚠ WARNING

Don't

Do not subject the equipment to strong force, impacts, or vibration such as letting it fail, stomping or throwing it.
Doing so may cause fire, burns, injury, electric shock, etc.

Don't

Do not allow conductive materials (such as metal objects and pencil lead) to come into contact with the charging jack or external connection jack or dust to get inside it.
Doing so may cause fire, burns, injury, electric shock, etc.

Don't

Do not cover or wrap the equipment with a cloth or bedding in use or while charging.
Doing so may cause fire, burns, etc.

Do

If charging does not finish after specified time has elapsed, stop charging.
Failure to do so may cause fire, burns, injury, etc. due to overcharge etc.

Do

Power off the terminal before you step into a place where flammable gas or dust is generated. Stop charging if you charge the battery.
May cause explosion, fire, etc. if the flammable gas, etc. catches fire.

Do

Follow the instructions of facility for use in a gas station, etc.
Do not charge the battery in a gas station, etc. Also, be careful not to drop the terminal when using in a gas station etc. Do not use it during oil feeding.
May cause explosion, fire, etc. if the flammable gas, etc. catches fire.

Do

If you notice anything unusual about the equipment such as an unusual odor, abnormal noise, smoke generation, overheating, discoloration or deformation while using or charging, or during storage, take care of safety and perform the following measures.
- Remove a power plug from a power outlet or accessory socket.
- Power off the terminal.

Failure to do so may cause fire, burns, injury, electric shock, etc. if you do not follow the instructions above.

⚠ CAUTION

Don't

Do not use damaged equipment.
Doing so may cause fire, burns, injury, etc.

Don't

Do not place on an unstable or inclined platform. Be careful especially when vibrator is set.
Doing so may cause the device to fall etc. and cause injury.

Don't

Do not use or keep in a place that is very humid, dusty, or subject to high temperature.
Doing so may cause fire, burns, electric shock, etc.
For waterproofness/dustproofness, see the following.
⇒P.26 "Waterproofness/Dustproofness"

Don't

If children use the terminal, parents or guardians should give them the proper instructions for use and do not allow them to use the terminal in the wrong way.
Doing so may cause accidental ingestion, injury, electric shock etc.

Don't

Keep the equipment out of the reach of babies and infants or pets.
Especially be careful with a location to store small parts such as the tray of nano SIM card/microSD card.
Doing so may cause accidental ingestion, injury, electric shock etc.

Do

Be careful about rise of temperature when using the terminal continuously or while charging. Also, be careful not to touch the terminal unintentionally and continuously when it is in your pocket of clothes, you fall asleep, etc.
Temperature of the terminal or an adapter may rise when using applications, calling, performing data communication, watching videos, playing games, etc. continuously or while charging. Take care when you put the terminal in your pocket or you are asleep to prevent a redness of skin, itch, rash, low-temperature burn etc. which may be caused depending on your constitution or physical condition by directly contacting to a high temperature area continuously.

2. Handling the terminal

⚠ DANGER

Don't

Do not throw the terminal into fire or apply heat.
Doing so may cause fire, burns, injury, etc.

Don't

Do not apply excessive force such as sticking a sharp object (nail, etc.) to the terminal, hitting it with a hard object (hammer, etc.), or stepping on it.
Doing so may cause fire, burns, injury, etc.

Do

If the internal substance of the terminal contacts your eyes or mouth, immediately rinse your eyes or mouth with clean water and see a doctor right away.
Failure to do so may cause blindness, medical problem, etc. due to effects of the internal substance of the terminal etc.

⚠ WARNING

Don't

Do not turn on or flash the flash/photo light with the luminous part close to the other people's eyes. Keep enough distance away especially from babies and infants.
Doing so may cause blurred vision etc. Or it may dazzle his/her eyes or scare him/her causing an accident such as injury.

Don't

Do not turn on or flash the flash/photo light toward a driver of a car etc.
Doing so may disturb driving and cause an accident etc.

Don't

Do not watch a repeatedly-blinking screen for a long time.
Doing so may cause cramp, loss of consciousness, etc.

Don't

Do not allow water or other liquids (drinking water, sweat, seawater, urine of pet animal, etc.), or foreign substance such as a metal parts (blade of cutter, staple, etc.) or flammables to get in the nano SIM card/ microSD card slot of the terminal.
Do not insert a nano SIM card or microSD card into wrong slot or in wrong orientation.
Doing so may cause fire, burns, injury, electric shock, etc.

Don't

Do not expose the camera lens to direct sunlight for an extended period.
Doing so may cause fire, burns, injury, etc. by the light-collecting mechanism of the lens.

Do

Power off the terminal or put it in Airplane mode before boarding an airplane.
Use of mobile phones on board is restricted. Follow the instructions of each airline.
The radio waves may adversely affect on-board electronic equipment.
Prohibited acts related to mobile phone usage on an airplane may be punished by law.

Do

Follow the instructions of each medical facility for the use of mobile phones on their premises.
Power off the terminal in a place where the use is prohibited.
The radio waves may affect electronic equipment and electronic medical equipment.

Do

Always keep the terminal away from your ear when you talk with hands-free set, while the ringtone is loudly sounding, or in stand-by mode.
Also, when you play a game, play back a video or music, etc. connecting the earphone/microphone, etc. to the terminal, adjust the volume adequately.
Loud sound is emitted from the terminal when calling with hands-free set.
Even in standby mode, ringtone or alarm sound may sound suddenly.
Listening to loud sound for long hours continuously may cause a disability of ears such as deafness.
Moreover, too loud sound makes you to barely hear the surrounding sounds and may cause an accident.

Do

If you have a weak heart, set the vibrator or ringtone volume carefully.
Sudden vibration or ringtone sounding when for incoming call astonishes you and it may affect your heart.

Do

If you wear any electronic medical equipment, check with the relevant medical electronic equipment manufacturer or vendor whether the operation may be affected by radio waves.
The radio waves may affect the electronic medical equipment.

Do

Power off the terminal when it is near electronic devices or equipment which controls with high precision or handles weak signals.

The radio waves may interfere with the operation of electronic devices or equipment.

* The following are some electronic devices or equipment that you should be careful of: Hearing aids, implantable cardiac pacemaker, implantable cardioverter defibrillator, other electronic medical equipment, and other automatically controlled devices or equipment. If you use an implantable cardiac pacemaker, implantable cardioverter defibrillator, or other electronic medical equipment, check with the medical electronic equipment manufacturer or vendor whether the operation can be affected by radio waves.

Do

Be careful about broken glasses or exposed internal part of the terminal if the display, camera lens, etc. is broken.

Touching damaged or exposed area may cause burns, injury, electric shock, etc.

Do

If the substance of the internal battery leaks or gives off a strange smell, immediately remove it from the vicinity of open flames.

The leaking liquid may ignite fire, catch fire, explode etc.

Do

Be careful not to allow a pet etc. to bite the terminal.

Doing so may cause fire, burns, injury, etc. because of damage of the internal battery.

⚠ CAUTION

Don't

When using the motion sensor, check the safety around you, hold the terminal firmly, and do not shake it unnecessarily.

Failure to do so may cause accident such as injuries.

Don't

If the internal substance is leaked due to damage of the display, do not allow it to touch your skin such as face, hands, or cloths etc.

Doing so may cause injury etc. on your eyes or skin.

If the internal substance gets into your eyes, mouth, etc. or contacts skin or clothes, immediately rinse the contacted area with clean water.

If the substance gets into your eyes, mouth, etc. immediately see a doctor after rinsing.

Don't

Do not dispose of the terminal together with usual trash.

Doing so may cause fire, burns, injury, etc. Also, it may cause environmental destruction. Bring the unnecessary terminal into a sales outlet such as docomo Shop. If your local municipality has a battery recycling program, dispose of them as provided for.

Don't

If the substance leaks out from the internal battery, do not make it contact with your skin of face or hands, clothes, etc.

Doing so may cause injury etc. on your eyes or skin.

If the internal substance gets into your eyes, mouth, etc. or contacts skin or clothes, immediately rinse the contacted area with clean water.

If the substance gets into your eyes, mouth, etc. immediately see a doctor after rinsing.

Do

To use the terminal in a car, check with automobile manufacturer or dealer to determine how the device is affected by radio waves before using.
In rare cases, the radio waves may affect the vehicle's electronic equipment in some vehicle models. In that case, stop using the terminal immediately.

Do

If abnormalities on skin are developed by using the terminal, immediately stop using and take medical treatment.
The use of the terminal may cause itching, rashes, eczema, or other symptoms depending on the your physical condition. For material of each part, see the following.
⇒P.17 "Material list"

Do

Make sure not to get metal objects (blade of cutter, staples, etc.) adhered because magnetic parts are used on the earpiece, speaker, vibrator (lower right of the back side) of the terminal.
Such adhered objects may cause injury etc.

Do

Keep the equipment out of the reach of children, people who needs to be supervised, etc.
The terminal contains magnets. If he or she swallows the magnet, suffocation or serious symptom resulting from hurt of bowel etc. may be caused. When he or she swallowed the magnet, consult a doctor immediately.

Do

Do not let it close to medical device.
The magnets used for the terminal may affect medical devices such as a pacemaker, pressure variable shunt for hydrocephalus curing, etc. Do not let the terminal close to persons who use such medical devices. If you are a user of such medical device, consult your doctor before using the terminal.

Do

Watch the display in an adequately bright place taking a certain distance from it.
Watching in a dark place or closely may reduce visual acuity etc.

3. Handling adapters

⚠ WARNING

Don't

Do not use an adapter whose cord is damaged.
Doing so may cause fire, burns, electric shock, etc.

Don't

DC adapter is only for a negative ground vehicle. Do not use DC adapter for a positive ground vehicle.
Doing so may cause fire, burns, electric shock, etc.

Don't

Do not touch an adapter if you hear thunder.
Doing so may cause electric shock etc.

Don't

Do not short-circuit the charging jack while it is connected to a power outlet or accessory socket. Do not touch the charging terminals with your hands, fingers, or any part of your body.
Doing so may cause fire, burns, electric shock, etc.

Don't

Do not place heavy objects on a cord of adapter, or do not apply unnecessary force to the cord by pulling etc.
Doing so may cause fire, burns, electric shock, etc.

Don't

When you insert/remove a plug of AC adapter to/from power outlet, do not let it to contact with metal objects.
Doing so may cause fire, burns, electric shock, etc.

Don't

Do not connect the voltage converter (e.g. travel converter for overseas) to AC adapter.
Doing so may cause ignition, overheating, electric shock etc.

Don't

Do not put an excessive force to the connection part with the adapter connected to the terminal.
Doing so may cause fire, burns, injury, electric shock, etc.

No wet hands

Do not touch an adapter cord, charging jack, or power plug with wet hands.
Doing so may cause fire, burns, electric shock, etc.

Do

Use the adapter only on the specified power supply and voltage.
When charging the terminal overseas, use AC adapter for global use.
Using the incorrect power supply and voltage may cause fire, burns, electric shock, etc.
AC adapter : 100V AC (Make sure to connect the adapter to a household AC power outlet.)
AC adapter for global use : 100V to 240V AC (Make sure to connect the adapter to a household AC power outlet.)
DC adapter : 12V or 24V DC (only for a negative-ground vehicle)

Do

When replacing a fuse in a DC adapter, make sure to use the specified fuse.
Using a fuse other than specified may cause fire, burns, electric shock, etc. For the specified fuse, check a manual that comes with a DC adapter.

Do

Wipe dust off from the power plug.
Using it with dust adhered may cause fire, burns, electric shock, etc.

Do

When you connect an adapter or accessory socket to a power outlet, insert it firmly.
Insecure inserting may cause fire, burns, electric shock, etc.

Do

When you disconnect the power plug from a power outlet or accessory socket, do not apply excessive force such as pulling the adapter cord. Instead, hold the adapter to disconnect.
Pulling the adapter cord may damage the cord and cause fire, burns, electric shock, etc.

Do

When plugging/unplugging an adapter into/from the terminal, plug/unplug the adapter straight toward the jack without applying excessive force such as pulling the cord etc.
Incorrect plugging/unplugging may cause fire, burns, injury, electric shock, etc.

Do

If the charging terminal is deformed such as being bent etc., stop using immediately. Do not use it with the deformation restored.
Doing so may cause fire, burns, injury, etc. due to short-circuit of charging terminal.

Unplug

Always disconnect the power plug from a power outlet or accessory socket when not using the equipment.
Keeping with connected to the power plug may cause fire, burns, electric shock, etc.

Unplug

Immediately remove the power plug from a power outlet or accessory socket if liquid such as water (drinking water, sweat, seawater, urine of pet animals, etc.) is adhered.
Failure to do so may cause fire, burns, injury, etc. due to short-circuit from the adhered substance.

Unplug

Before cleaning, remove the power plug from a power outlet or accessory socket.
Failure to do so may cause fire, burns, electric shock, etc.

⚠ CAUTION

Don't

Do not touch an adapter successively when it is connected to a power outlet or accessory socket.
Doing so may cause a burn etc.

4. Handling a nano SIM card

⚠ CAUTION

Do

Be careful of the cut surface not to hurt your body parts such as fingers when handling a nano SIM card.
The cut surface may be sharp and it may cause injury etc.

5. Handling the terminal near electronic medical equipment

⚠ WARNING

Do

If you use an implantable cardiac pacemaker or implantable cardioverter defibrillator, keep the terminal 15 cm or more away from the implant at all times.
The radio waves may affect the performance of electronic medical equipment.

Do

If you need to use electronic medical equipment other than implantable cardiac pacemaker or implantable cardioverter defibrillator outside medical facilities when treating at home etc., check with the relevant medical electronic equipment manufacturer whether the operation may be affected by radio waves.
The radio waves may affect the performance of electronic medical equipment.

Do

When you get close to other people within 15 cm just like not having enough space to turn around, set the radio wave of the terminal to OFF beforehand (Airplane mode, to Power off, etc.).

A person in close proximity may put on implanted medical electrical equipment such as pacemakers and ICDs. The radio waves may affect the performance of electronic medical equipment.

Do

Follow the instructions of each medical facility for the use of the terminal on their premises.

The radio waves may affect the performance of electronic medical equipment.

6. Material list

The terminal

Part	Material	Surface treatment
Exterior case (top part, bottom part, side part)	Nylon resin (with glass fiber)	Coating
External case (Volume key/Zoom key, back panel)	Polycarbonate resin	Coating
Exterior case (cover of the nano SIM card/ microSD card slot)	Polycarbonate resin (with glass fiber)	Coating
Exterior case (camera ring (around main camera))	Aluminum alloy	Alumite treatment
Transparent plate (Display)	Hardened glass	AFP treatment
Transparent plate (main camera)	Hardened glass	AFP treatment + AR treatment
Flash/Photo light	Acrylic resin	—
Power key/Fingerprint sensor	Epoxy resin	Coating
Earpiece mesh	PET	—
Speaker mesh	Polycarbonate resin	—
Rubber gasket of the cover of the nano SIM card/microSD card slot	Silicon rubber	—

Part	Material	Surface treatment
Tray of nano SIM card/ microSD card	Polycarbonate resin (with glass fiber) + SUS sheet metal	—

Handling precautions

Common precautions

- XXXXXX is waterproof/dustproof; however, do not allow liquids such as water (drinking water, sweat, seawater, urine of pet animals, etc.) or foreign objects such as dust to enter inside of the terminal or adhere to optional devices.

  Adapters and nano SIM cards are not waterproof/dustproof. Do not use in a highly humid place such as a bathroom or in a place where it is exposed to rain etc. Or when putting them on your body, humidity of sweat may cause internal corrosion and malfunction. Malfunctions which are determined to be caused by water as result of inspections are not covered by the warranty. For repairs, see "Warranty and After Sales Services" (P.228).
- Waterproofness/dustproofness may not be maintained if the terminal has defect in appearance such as damage or deformation. In that case, see "Warranty and After Sales Services" (P.228) and then inquire about it.
- Clean the terminal with a dry soft cloth (such as used for cleaning eyeglasses).
  - Rubbing roughly may scratch the display.
  - Drops of water or dirt left on the display may cause stains.

- Do not use alcohol, thinner, benzine, cleaning detergent, etc. to clean the terminal. These chemicals may erase the printing on the terminal or cause discoloration.

- **Clean the jacks or the fingerprint sensor occasionally and use the terminal in a clean state.**
  If the jack etc. is dirt, you may not use the terminal normally.
  When cleaning, be careful not to damage the jack etc.
- **Do not leave the terminal near the air conditioning vent.**
  Extreme temperature changes may produce condensation and corrode the internal parts of the terminal, causing the terminal to malfunction.
- **Make sure to use the terminal without excessive force.**
  Putting the terminal in a bag full of items or sitting down with the terminal in a pocket of clothes may cause malfunction or damage of the display, internal circuit board, internal battery, etc.
  Also, doing so while the external device is connected to the external connection jack may cause malfunction or damage.
- **Use the optional devices specified by NTT DOCOMO.**
  Using a non-specified device may cause malfunction or damage.
- **Read the user's manual supplied with each optional device.**
- **Do not drop the terminal or give a strong impact to the terminal.**
  Doing so may cause a malfunction or damage.

The terminal precautions

- **Do not press the display strongly, or not operate with a sharp-pointed objects.**
  The display may get scratched and it may cause a malfunction or damage.
- **Do not use the terminal in extremely hot or cold places.**
  Use the terminal where the temperature ranges between 5℃ and 40℃ (limited to the temporary use in a bathroom etc. when temperature is above 36℃) and humidity ranges between 45% and 85%.
- **Using the terminal near a household electric appliance (a TV, radio, etc.) may cause interference in such electric appliance.**
- **Back up data that you saved to the terminal to a microSD card, a PC, or cloud, etc., or note down in a separate note and keep it safely.**
  NTT DOCOMO is not liable for any loss of data saved in the terminal.
- **Do not insert the plug of external device to the external connection jack at a slant when connecting. Or, do not pull the plug when they are connected.**
  Doing so may cause a malfunction or damage.

- It is not abnormal if the terminal becomes warm while in use or charging. You can continue using the terminal.
- Do not expose the camera lens under direct sunlight.
  If you do so, some of the elements may melt or become faded.
- Always keep the cover of the nano SIM card/microSD card slot closed during use.
  Failure to do so may allow liquids such as water (drinking water, sweat, seawater, urine of pet animals, etc.) or foreign objects such as dust to enter inside and cause a malfunction.
- Do not subject the fingerprint sensor to strong impact or scratch it.
  Doing so not only may cause a malfunction of the fingerprint sensor, but also authentication may become unavailable.
- While microSD card is being used, do not take the card out and do not turn off the terminal.
  Doing so may cause data loss or malfunction.
- Keep off a magnetic card or a magnetic object from the terminal.
  The data in cash cards, credit cards, etc. may be erased.
  Also, strong magnetic objects may cause a malfunction of the terminal.
- Do not decorate the terminal with a film or stickers.
  Some functions that use the proximity sensor may not work correctly.
  For a location of proximity, see the following.
  ⇒P.32 "Part names and functions"
- The internal battery is out of the warranty due to a consumable part.
  The internal battery may become swelled toward the end of battery life depending on usage condition of the internal battery.
  Replace the internal battery if its usable time is extremely shortened even in a full charge or when the internal battery is swollen. For replacement of the internal battery, DOCOMO keeps the terminal and accept for a fee. See "Warranty and After Sales Services" (P.228) because we accept as a repair request.
- Charge the battery in an environment with the proper ambient temperature (5℃ to 35℃).
- The operating time of the internal battery varies depending on the operating environment and the degradation level of the internal battery.

- To store the terminal, avoid the following conditions so as not to degrade the performance or the battery life of the internal battery.
  - The battery is fully charged (immediately after the charging is complete)
  - The battery has run out (the terminal cannot power on)

  An appropriate battery level for storing is about 40%.
- Type of internal battery for the terminal is as follows.

Display	Type of Battery
Li-ion 00	Lithium Ion Battery

Adapter precautions

- Charge the battery in an environment with the proper ambient temperature (5℃ to 35℃).
- Do not charge in the following places.
  - Places that are very humid, dusty or exposed to strong vibrations
  - Near household electric appliance (a TV, radio, etc.)
- The adapter may become hot during charging. This condition is not abnormal. You can continue using the terminal.
- When using the DC adapter for charging, do not turn off the vehicle engine.

  Doing so may cause the exhaustion of vehicle battery.
- When you use a power outlet with a mechanism to prevent the plug from being removed, follow the instructions on the outlet's user's manual.
- Do not subject the equipment to a strong impact. Do not deform the charging jack.

  Doing so may cause malfunction.

Precautions for nano SIM cards

- Do not apply unnecessary force to insert/remove a nano SIM card.
- Note that DOCOMO assumes no responsibility for any malfunctions resulting from inserting a nano SIM card into another IC card reader/writer and using it.
- Clean the IC part occasionally and use it in a clean state.

  If the IC is dirt, it may not be used properly.
- Clean the terminal with a dry soft cloth (such as used for cleaning eyeglasses).
- Back up data saved to your nano SIM card to a microSD card, PC, cloud, etc., or note down separately and keep it safely.

  NTT DOCOMO is not liable for any loss of data saved in the terminal.
- Take an unnecessary nano SIM card to a sales outlet such as docomo Shop for proper disposal in order to protect the environment.

- Do not carelessly damage, contact, or short-circuit an IC.
  Doing so may cause data loss or malfunction.
- Do not drop a nano SIM card or subject it to impact.
  Doing so may cause malfunction.
- Do not bend a nano SIM card or place a heavy object on it.
  Doing so may cause malfunction.
- Do not insert a nano SIM card with a label or sticker attached into the terminal.
  Doing so may cause malfunction.

Precautions for using Bluetooth® function

- To secure the Bluetooth communication, the terminal supports the security function compliant with Bluetooth standards, but the security may not be sufficient depending on the settings, etc. Be aware of security risks when using Bluetooth.
- Please be aware that DOCOMO is not responsible for any data leakage that might occur when communicating data via Bluetooth.
- Frequency band
  The frequency band used by the terminal's Bluetooth/wireless LAN function is written as follows:

2.4FH4/XX8/DS4/OF4

2.4 : This radio equipment uses the 2400 MHz band.

FH/XX/DS/OF : Modulation scheme is the FH-SS, other system, DS-SS, or OFDM system.

4 : The estimated interference distance is 40 m or less.

8 : The estimated interference distance is 80 m or less.

▬ ▬ ▬ : The full band between 2400 MHz and 2483.5 MHz is used and the band of the mobile identification device can be avoided.

Available channels vary depending on the country/region.
For use in an aircraft, contact the airline beforehand.

- Bluetooth cautions

The operating frequency band of the terminal is used by industrial, scientific, consumer and medical equipment including microwave ovens, premises radio stations for identifying mobile units used in the manufacturing lines of plants (radio stations requiring a license), specified low power radio stations (radio stations requiring no license) and amateur radio stations (hereinafter referred to as "another station").

- Before using this equipment, confirm that "another station" is not being operated nearby.
- In the event of the terminal causing harmful radio wave interference with "another station", promptly change the operating frequency or stop radio wave emission by turning off the power, etc.
- If you have any questions, inquire of the contact on the last page.

Wireless LAN (WLAN) precautions

- Wireless LAN (WLAN) exchanges information using radio waves, and allows you to freely establish LAN connection if you are within an area where radio waves reach. However, without appropriate security settings, communications may be intercepted or hacked by malicious parties. It is recommended to configure necessary security settings on your own judgment and responsibility.
- Please be aware that DOCOMO is not responsible for any data leakage that might occur when communicating data via wireless LAN function.
- Wireless LAN

Do not use wireless LAN near magnetic devices such as electrical appliances or AV/OA devices, or in radio waves.

- Magnetism or radio waves may increase noises or disable communications (especially when using a microwave oven).
- When used near TV, radio, etc., reception interference may occur, or channels on the TV screen may be disturbed.
- If there are multiple wireless LAN access points nearby and the same channel is used, search may not work correctly.

- 2.4GHz device cautions

  The operating frequency band of the WLAN device is used by industrial, scientific, consumer and medical equipment including home electric appliances such as microwave ovens, premises radio stations for identifying mobile units used in the manufacturing lines of plants (radio stations requiring a license), specified low power radio stations (radio stations requiring no license) and amateur radio stations (radio stations requiring a license).

  - Before using the device, confirm that premises radio stations for identifying mobile units, specified low power radio stations and amateur radio stations are not being operated nearby.
  - If the device causes harmful radio interference to premises radio stations for identifying mobile units, immediately change the frequency band or stop use, and inquire of the contact on the last page for crosstalk avoidance, etc. (e.g. partition setup).
  - If the device causes radio interference to specified low power radio stations or amateur radio stations, inquire of the contact on the last page.

- 5GHz device cautions

  The terminal can use 3 frequency bands of 5.2GHz band (W52), 5.3GHz band (W53), 5.6 GHz band (W56).

  - 5.2GHz band (W52/36, 40, 44, 48 ch)
  - 5.3GHz band (W53/52, 56, 60, 64 ch)
  - 5.6GHz band (W56/100, 104, 108, 112, 116, 120, 124, 128, 132, 136, 140, 144 ch)

  Use of 5.2/5.3 GHz band wireless LAN outdoors is prohibited by the law (except when communicating with an access point of high power data communication system for 5.2 GHz band/relay station).

Precautions for FeliCa® and NFC reader/writer function

- FeliCa and NFC reader/writer function of the terminal use weak waves requiring no licenses for radio stations.
- They use 13.56 MHz frequency band. When the other FeliCa or NFC reader/writer is used in the surroundings, keep the terminal away sufficiently from them.

  Before using, confirm that there are no radio stations using the same frequency band nearby.
- For use in an aircraft, contact the airline beforehand. Some countries/regions may restrict the use of the function. Check the regulations of the country/region before using it.

Note

- **Do not use a remodeled terminal. Using a remodeled terminal violates the Radio Law/Telecommunications Business Act.**

  The terminal is compliant with rules on the technical standard conformance of specified wireless equipment based on the Radio Law/Telecommunications Business Act, and as a proof of it, the "Technical Compliance Mark ⊜" is depicted on the electronic nameplate of the terminal. To check the electronic name plate, from the Home screen, ▦▶[Settings]▶[About phone]▶[Certificates].

  If you remove the screws and alter the inside of the terminal, the technical regulations conformity certification becomes invalid.

  Do not use the terminal with the certification invalid, as it is a violation of the Radio Law and Telecommunications Business Act.

- **Be careful when using the terminal while driving.**

  Unless required by laws and regulations, gazing at the screen of the terminal or holding the terminal in your hand for calling while driving is subject to penalties.

- **To prevent possible hearing damage, do not listen at high volume levels for long periods.**

- **This mark is displayed when the surface temperature of the product rises during use. When the mark is displayed, there is a risk of burns if you continue using the product while holding it in your hands. In this case, please refrain from holding it in your hands.**

- **The FeliCa and the NFC reader/writer functions are compliant with the wireless standards of Japan.**

  Check the regulations of the country/region beforehand if you try to use the function overseas.

- **Do not alter the basic software illegally.**

  It is regarded as the software modification and Repairs may be refused.

Waterproofness/ Dustproofness

XXXXXX provides waterproofness property of IPX5*1, IPX8*2, and dustproofness property of IP6X*3 with the cover of the nano SIM card/microSD card slot firmly installed.

*1 IPX5 means that a communication device keeps functioning after applying a jet flow of 12.5 L/min. from every direction from a distance of approximately 3 m for at least 3 minutes using water nozzle in 6.3 mm inner diameter.

*2 IPX8 means that a communication device keeps functioning after it is slowly submerged to depth of 1.5 m in static tap water at room temperature, left there for approximately 30 minutes and then taken out.

*3 IP6X indicates a protection degree that a mobile phone has the ability to prevent dust from entering inside even when it has been shaken for 8 hours in an apparatus containing dust particles 75 μm or less in diameter.

What you can do with waterproofness/dustproofness of XXXXXX

- You can talk without an umbrella in the rain (for rainfall of 20 mm or less per hour).
  - Do not open or close the cover of the nano SIM card/microSD card slot with wet hands or with water droplets on the terminal.
- You can wash the terminal when it gets dirt or stained with liquid other than tap water.
  - Wash the terminal with tap water at normal temperature (5℃-35℃) by weaker water flow (less than 6 L/min.) at distance of approximately 10 cm away from the tap or shower.
  - When washing the terminal, hold the cover of the nano SIM card/microSD card slot closed, and wash the terminal with your hands, not using a brush or sponge. After washing, drain water from the terminal before use (P.30).
- You can use at a poolside. Do not throw water from the pool on the terminal, or soak it in pool water.

- You can use the terminal in a bathroom.
  - Do not immerse the terminal into a bathtub. Also, do not use the terminal in hot water. Doing so may cause malfunction. If you should fall the terminal into the bathtub, immediately pick it up to drain water in specified procedure (P.30).
  - Never put the terminal in hot spring water or water containing soap, detergent or bath powder. In case the terminal gets wet with water other than tap water, wash it in the procedure previously mentioned.
  - You can use the terminal within 2 hours in a bathroom where the temperature ranges between 5 and 45℃ and humidity ranges between 45 and 99%.
  - Sudden change in temperature may cause condensation. In case of bringing the terminal from a cold place to a warm place such as a bathroom, wait until the temperature of the terminal comes to room temperature.
  - Do not splash hot water from a faucet or shower.

To ensure waterproofness/ dustproofness

To avoid water ingress, be sure to observe the following points.

- Do not throw any liquid other than room temperature tap water on the terminal, or soak the terminal in such liquid.
- Firmly close the cover of the nano SIM card/ microSD card slot. Even a fine obstacle (one hair, one grain of sand, tiny fiber, etc.) put between contact surfaces may allow water to enter.
- Do not poke the earpiece, mouthpiece/ microphone, speaker, second microphone, headset jack, USB Type-C® jack, etc. with a sharp-pointed object.
- Do not let the terminal fall. It may become scratched causing the waterproof/dustproof performance to degrade.
- The rubber gasket on the inner side of the cover of the nano SIM card/microSD card slot plays an important role in keeping waterproof/dustproof performance. Do not remove or damage them. Also, prevent dust from adhering to them.

Opening the cover of the nano SIM card/microSD card slot

Put your tip of finger (fingernail) into the groove and draw the cover out in the arrow direction.

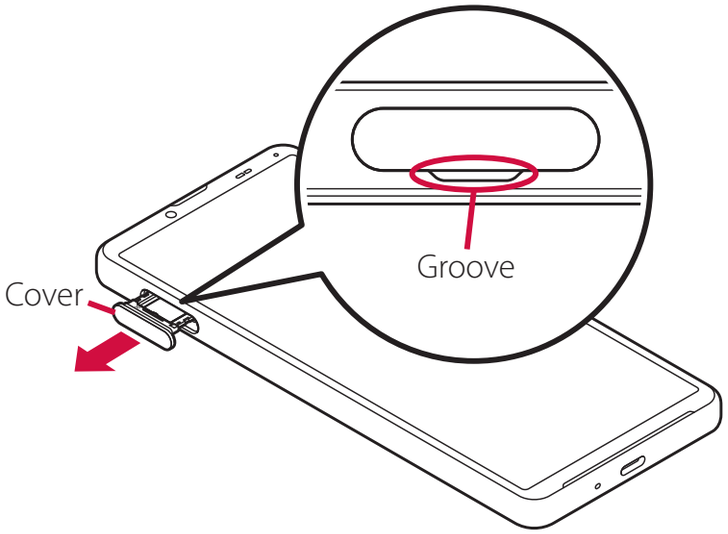

Closing the cover of the nano SIM card/microSD card slot

Push the tray all the way in the arrow direction and firmly press ○ parts and make sure that there are no gaps between the terminal and the cover.

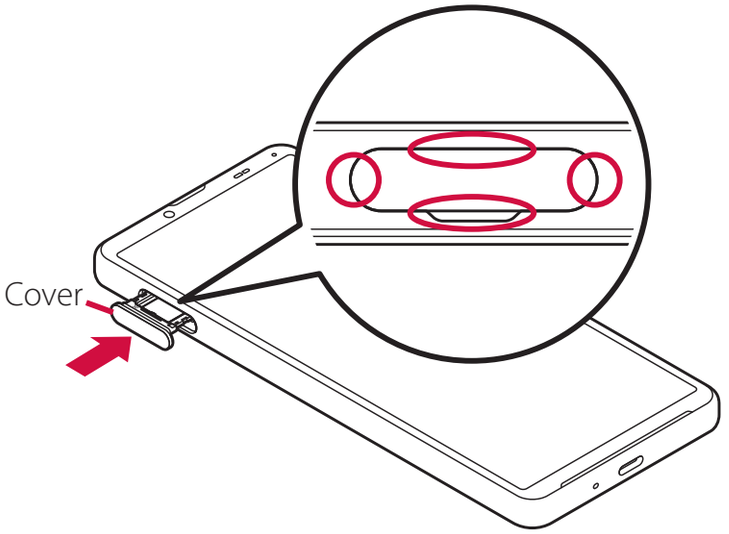

It is recommended to replace the parts for maintaining waterproof/dustproof property once every two years regardless of whether any abnormality is present. For replacement of the parts, DOCOMO keeps the terminal at DOCOMO-specified repair office and accept for a fee. For inquiries, refer to the last page.

Important precautions

Do not perform actions shown in the illustrations below.

<Example>

Using Soap/Detergent/ Bath powder

Washing with brush/sponge

Machine-washing

Applying strong water flow

Soaking in ocean water

Using in hot spring

Attaching sand/mud

Observe the following precautions to use the terminal properly.

- Optional devices are not waterproof/ dustproof.
- Do not apply water flow stronger than allowed (P.26). XXXXXX provides IPX5 waterproofness, but doing so may cause malfunction.
- If the terminal gets wet with salt water, sea water, refreshing beverage or mud or sand adhered, wash it immediately. If they dry out, it is hard to remove the dirt and it may cause damage or malfunction.
- Do not put the terminal in hot water, use it in a sauna or apply hot airflow (from a hair dryer etc.) to it.
- Do not move the terminal under water or slam the terminal against the surface of water.
- If you put the terminal in tap water, be sure to have it within 30 minutes.
- When you use the terminal in swimming pool, obey rules of the facility.
- The terminal does not float on water.
- Do not leave water on the terminal. In cold region, the terminal freezes up and may cause malfunction.
- Do not leave water droplet on the earpiece, mouthpiece/microphone, speaker, second microphone and headset jack. Such water may cause talking failure.
- If water or other liquid splashes the terminal when the cover of the nano SIM card/ microSD card slot is open, the liquid may enter inside of the terminal and cause electric shock or malfunction. Do not use the terminal and turn off the power. For handling, inquire of the contact on the last page.
- If the rubber gasket on the inner side of the cover of the nano SIM card/microSD card slot is damaged or deformed, replace the part at a DOCOMO-specified repair office. Note that repair may be accepted for a fee depending on the terminal condition.
- Do not connect earphones etc. when the terminal is wet with water. Doing so may cause a malfunction.

DOCOMO does not guarantee actual operations under all states. Malfunctions deemed to be caused by inappropriate operation by the customer are not covered by the warranty.

Draining water from the terminal

When the terminal is wet, water may flow out after wiping it off; drain the water in the following steps.

① Hold the terminal firmly and wipe off the front and back surfaces with dry, clean cloth etc.

② Shake the terminal about 20 times, firmly holding it, until no more drops of water come out (shown left). Do the same with the terminal upside down (shown right).

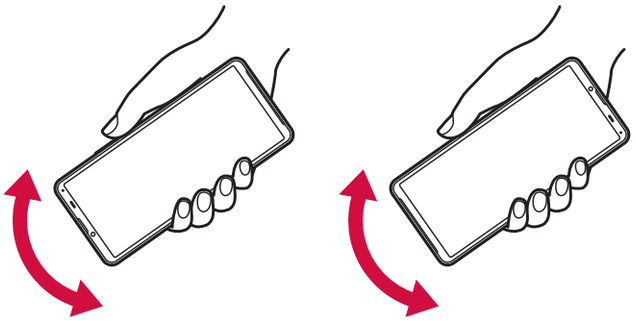

③ To wipe remained water off from the gaps or the following parts, tap the terminal against a dry, clean cloth or similar material about 10 times.

- Earpiece
- Mouthpiece/microphone
- Speaker
- Second microphone
- Headset jack
- USB Type-C jack
- Camera ring (around the main camera)
- Power key/Fingerprint sensor
- Volume key/Zoom key
- Cover of the nano SIM card/microSD card slot

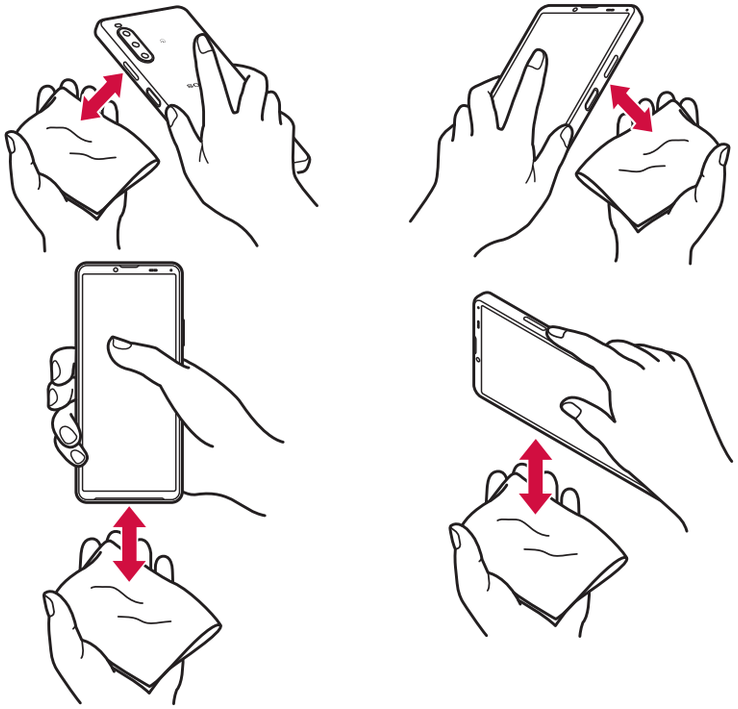

* Turn the terminal up side down to wipe off.

④ Wipe off water drained from the terminal with dry, clean cloth etc., and dry naturally.

- Wipe off water drained from the terminal with dry, clean cloth etc., and dry naturally.
- Do not wipe off water remaining in gaps directly with a cotton swab etc.
- Dry the terminal naturally for about 3 hours at room temperature.

Notes on charging

Check the following before and after charging.

- Check if the terminal is not wet while charging. Never charge the battery if the terminal is wet.
- Optional devices are not waterproof/ dustproof.
- When charging the battery when or after the terminal is wet, adequately drain it and wipe off water with a dry, clean cloth etc.
- Do not use the AC adapter in a bathroom, shower room, kitchen, lavatory, or other humid area. Doing so may cause fire or electric shock.
- Do not touch the AC adapter with wet hands. Doing so may cause electric shock.
- Never connect a Type-C plug if the terminal is wet. Although the terminal is waterproof, inserting a Type-C plug when the terminal is wet may cause an electric shock or short circuit due to moisture or foreign matter on the terminal or the Type-C plug. This can cause excessive heat, malfunction, fire, burn injury, electric shock, etc.

Before using the terminal

Part names and functions

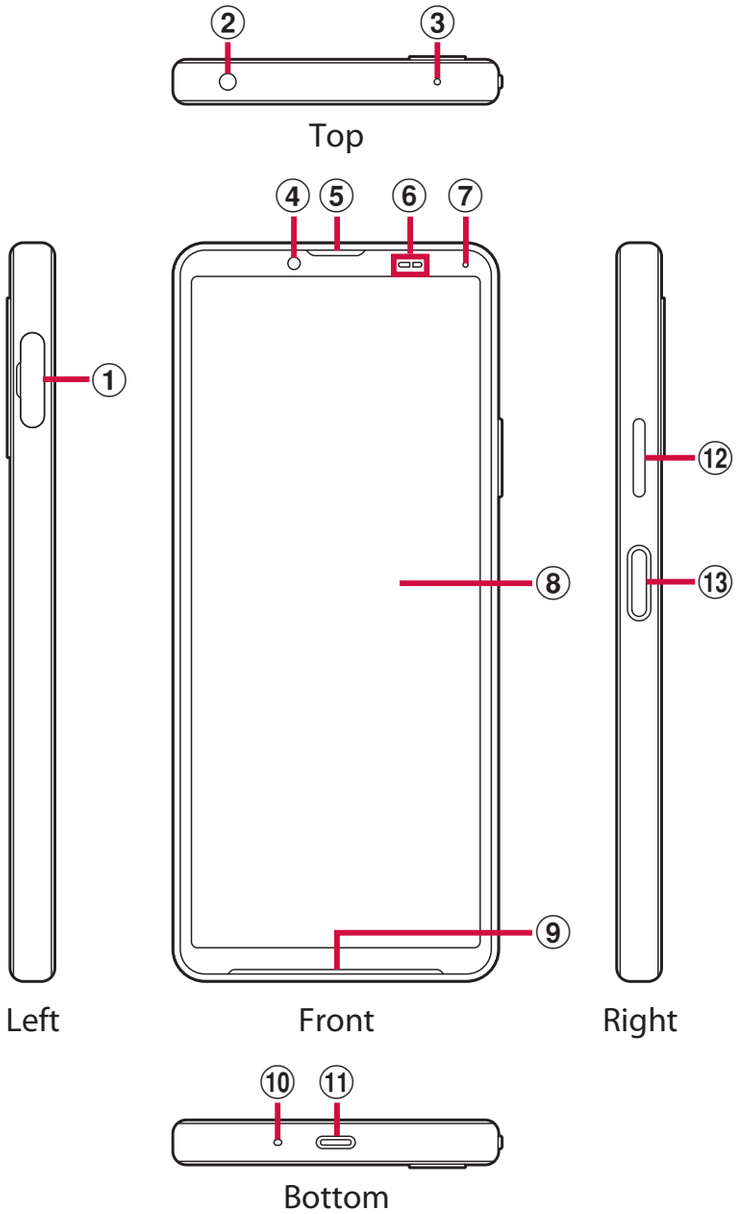

① nano SIM card/microSD card slot
② Headset jack→P.233
③ Second microphone : Used for reducing noise when calling.
④ Front camera→P.129
⑤ Earpiece
⑥ Proximity/light sensor*1 : Detects a face approach during a call to prevent misoperation, or used for automatic control of the screen brightness.
⑦ Notification LED→P.65
⑧ Display (Touch screen)→P.50
⑨ Speaker
⑩ Mouthpiece/microphone
⑪ USB Type-C jack : Used for charging etc. It supports USB Power Delivery.
⑫ Volume key/Zoom key : Use to adjust each sound volume, shoot with the camera, set silent mode, turn off the power, etc.
⑬ Power key/Fingerprint sensor*1 : Use to turn on/off the power or screen display, or perform fingerprint authentication.
Touch and hold for at least 1 second to open Google Assistant.

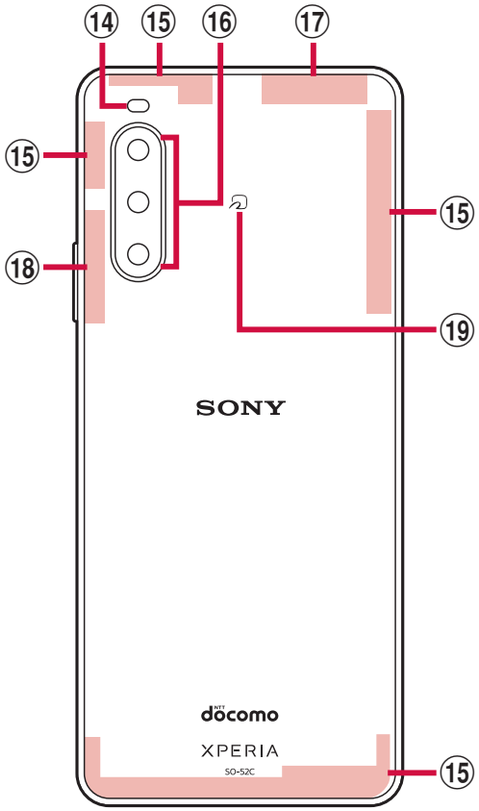

Back

⑭ Flash/Photo light
⑮ 5G/LTE antenna*2
⑯ Main camera→P.129
⑰ 5G/LTE/Wi-Fi/Bluetooth/GPS antenna *2
⑱ 5G antenna*2
⑲ mark→P.144

*1 Do not cover the sensor area with a sticker etc.
*2 It is built into the terminal. Covering this area with your hand may affect quality of communication.

❖Note

- The back panel cannot be removed. Attempting to remove the back panel with excessive force may cause damage or a malfunction.
- The battery is built into the terminal and not removal.

nano SIM card

nano SIM card is an IC card which stores information such as your phone number.

- You can use the terminal with a nano SIM card. If you have a docomo mini UIM card, UIM, or FOMA card, bring it to a docomo Shop to replace it.
- When a nano SIM card is not inserted to the terminal, making calls, packet communication, etc. are not available.
- For details on nano SIM cards, refer to NTT DOCOMO website.
- Turn off the terminal before installing/removing a nano SIM card.
- For opening/closing the cover of the nano SIM card/microSD card slot, see "To ensure waterproofness/dustproofness" (P.27).

Security codes of nano SIM card

nano SIM card has the security code of PIN code (P.48).

❖Information

- Please be careful not to touch or scratch the IC when handling nano SIM cards. Doing so may cause a malfunction or damage.

Installing a nano SIM card

1 **Draw the cover of the nano SIM card/microSD card slot (P.28).**

2 **Pull out the tray straight from the terminal.**

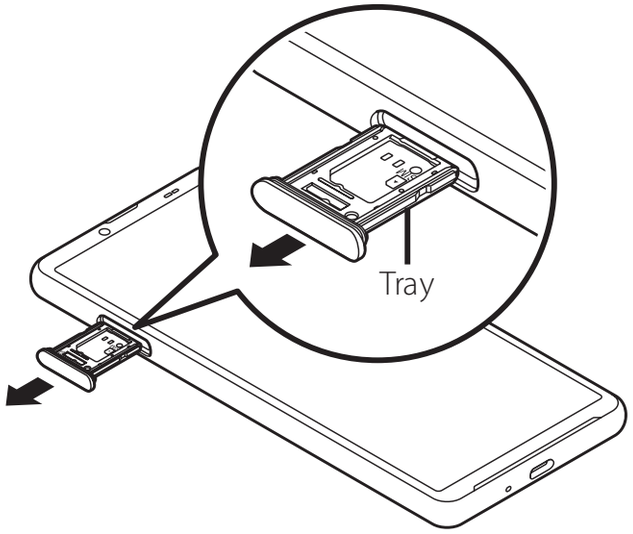

3 **Set the nano SIM card in the tray with the IC face down.**

- Make sure that the corner cut of the card is oriented properly.
- Be sure to fit the nano SIM card into the tray so that it does not shift.

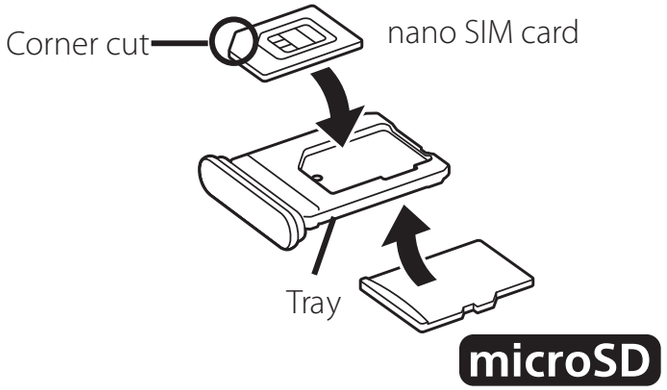

4 **Hold the terminal horizontally, insert the tray with the card into the terminal, and then push it straight.**

- Check the orientation of the terminal and the tray.

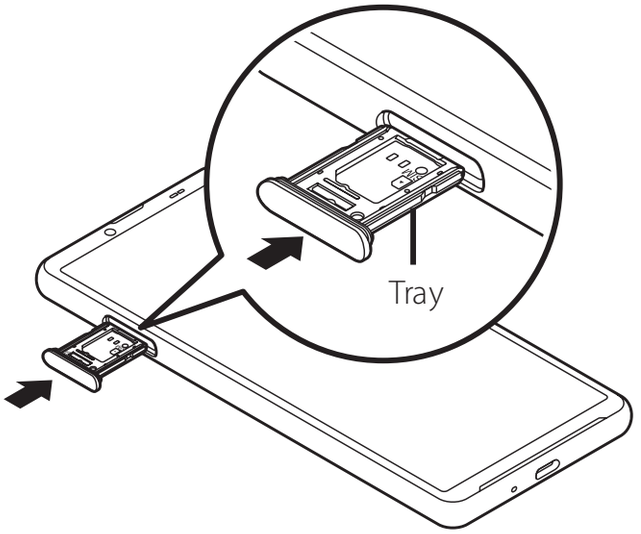

5 **Push the tray into the end, firmly press each point indicated with ○, and then make sure that there are no gaps between the terminal and the cover.**

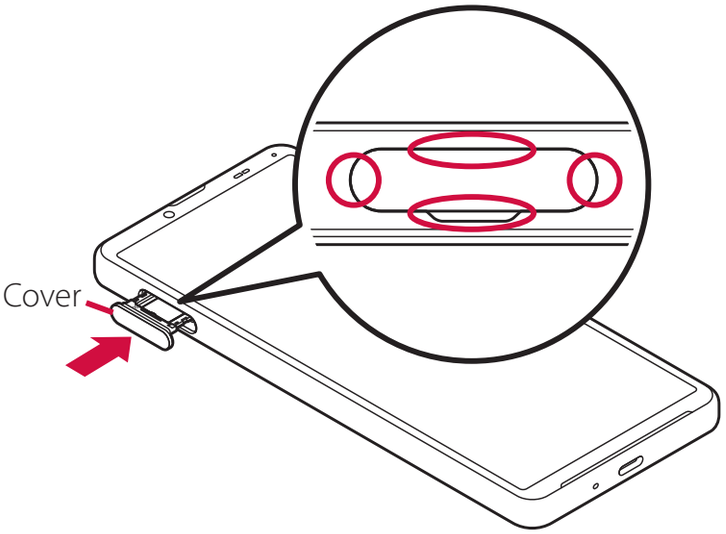

Removing a nano SIM card

1 **Draw the cover of the nano SIM card/microSD card slot (P.28).**

2 **Pull out the tray straight from the terminal (P.34).**

3 **Remove the nano SIM card from the tray.**

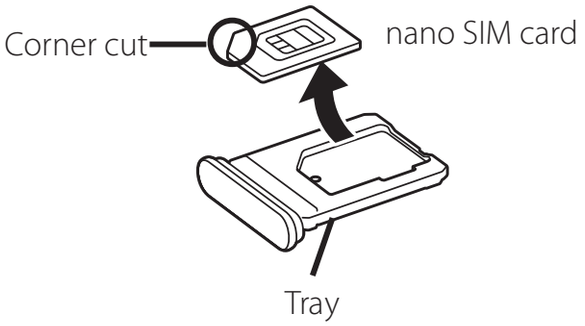

4 **Hold the terminal horizontally, insert the tray into the terminal, and then push it straight.**

- Check the orientation of the terminal and the tray.

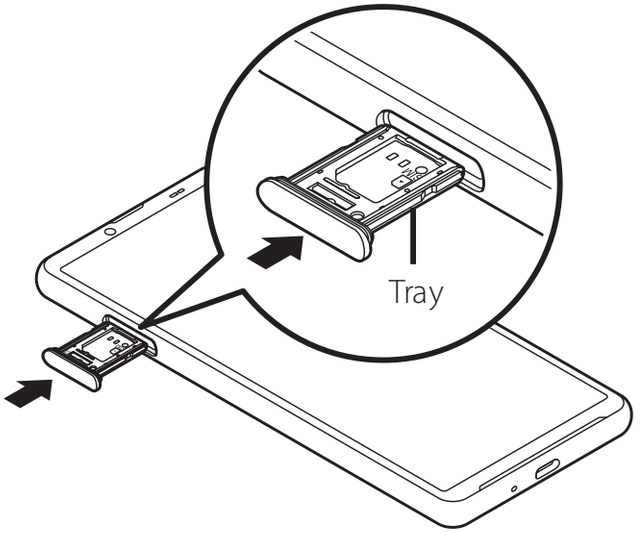

5 **Firmly push the tray into the end and make sure that there are no gaps between the terminal and the cover (P.35).**

microSD card

You can save the data in the terminal to a microSD card or import data from the microSD card to the terminal.

- The terminal supports microSD card of up to 2GB, and microSDHC card of up to 32GB, microSDXC card of up to 1TB (As of May, 2022).
- DOCOMO does not guarantee operations of any commercially available microSD card. For compatible microSD cards, contact each manufacturer of microSD card.
- A microSDXC card can be used only on a SDXC-compatible device. Do not install a microSDXC card to a non-microSDXC-compatible device because doing so may damage or destroy data saved on the microSDXC card.
- If you want to reuse a microSDXC card on which data is destroyed, format microSDXC card (all data will be erased) on an SDXC-compatible device.
- When copying data to/from a non-SDXC-compatible device, use a card (microSDHC card, microSD card, etc.) complying with standards of device.
- The terminal supports microSD cards of up to Class 10 and UHS speed class 1. Note that the speed class indicates performance of microSD cards and all the functions may not be performed at the speed class rate.
- Although a microSD card can be used on other compatible device, data which is transferred from the other device may not be viewed/played on the terminal. Also, data saved to the microSD card from the terminal may not be viewed/played on another devices.
- Turn off the terminal before installing/removing the microSD card.
- For opening/closing the cover of the nano SIM card/microSD card slot, see "To ensure waterproofness/dustproofness" (P.27).

Installing microSD card

1 Draw the cover of the nano SIM card/microSD card slot (P.28).

2 Pull out the tray straight from the terminal.

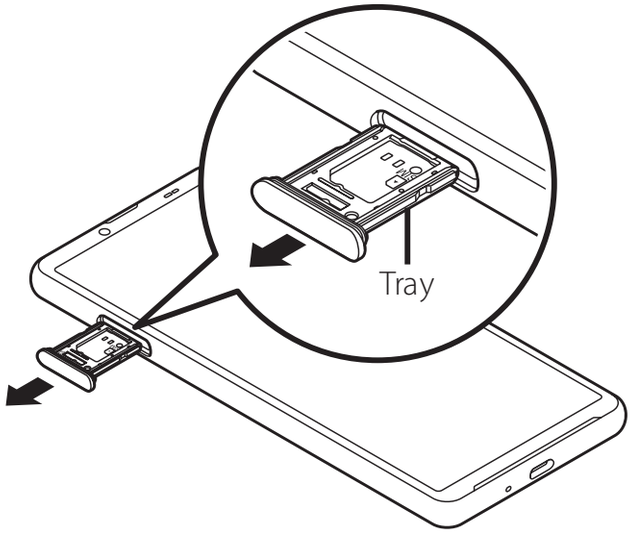

3 Put a microSD card in the tray with the contacts side down.

- Be sure to fit the microSD card into the tray so that it does not shift.

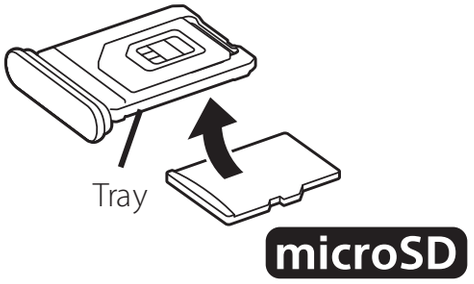

4 Hold the terminal horizontally, insert the tray with the card into the terminal, and then push it straight.

- Check the orientation of the terminal and the tray.

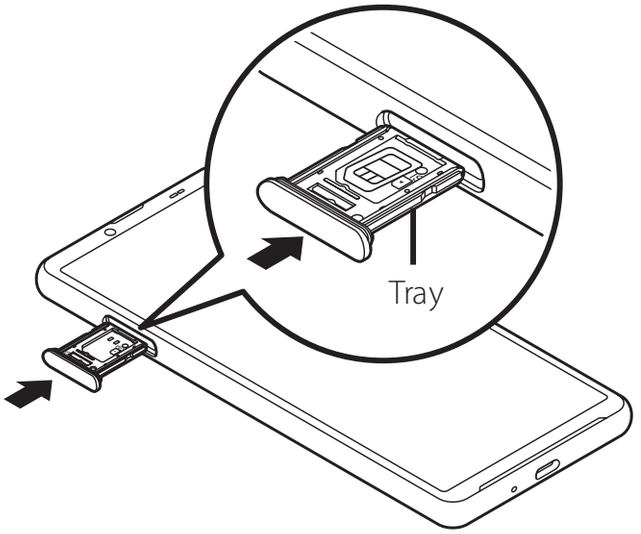

5 **Push the tray into the end, firmly press each point indicated with ○, and then make sure that there are no gaps between the terminal and the cover.**

- When the terminal is turned on, appears on the status bar.

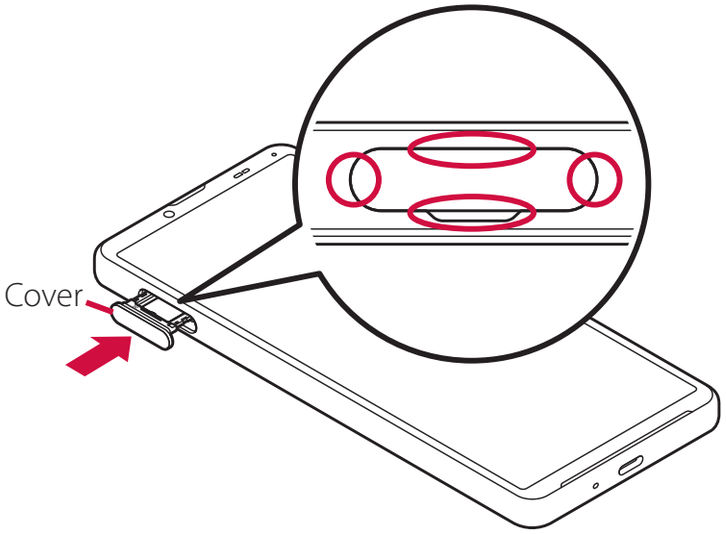

Removing microSD card

1 **Draw the cover of the nano SIM card/microSD card slot (P.28).**

2 **Pull out the tray straight from the terminal (P.37).**

3 **Remove the microSD card from the tray.**

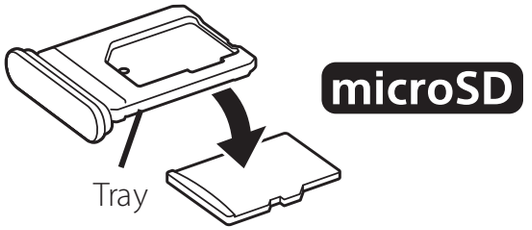

4 **Hold the terminal horizontally, insert the tray into the terminal, and then push it straight.**

- Check the orientation of the terminal and the tray.

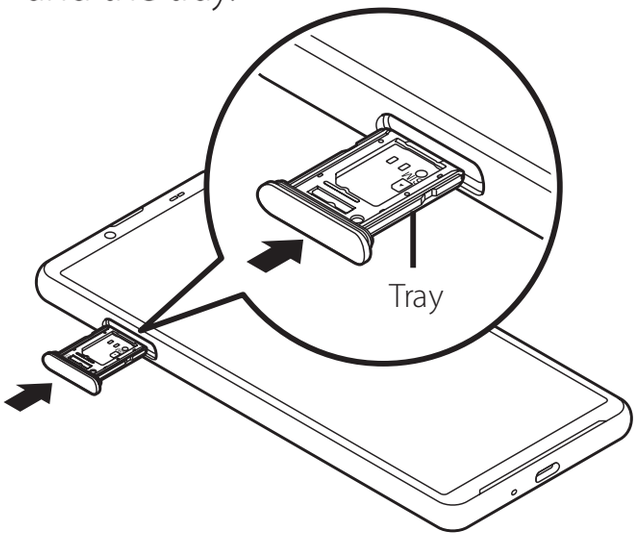

5 **Firmly push the tray into the end and make sure that there are no gaps between the terminal and the cover (P.38).**

Charging

The internal battery is not fully charged at the time of purchase.

- Estimated charging time (P.232)

Available time on full charge (estimate)

The available time differs depending on operating environment or the internal battery condition.

- Estimated available time (P.232)

Life of the internal battery

- The internal battery is a consumable part. Each time the internal battery is recharged, the battery usage time per one charge gradually decreases.
- When the battery usage time per one charge becomes about half of that at the time of purchased, replacing the internal battery is recommended because the internal battery is near the end of life.
- Using the application or shooting videos for a long time while charging may shorten the lifetime of the internal battery.
- To check performance of the internal battery, from the Home screen, tap ▦▶[Settings]▶[About phone]▶[Battery life].

Before charging

- It is recommended to use AC Adapter 08 (optional) for charging. For handling of AC Adapter 08, refer to the AC Adapter 08 manual.
- AC Adapter 08 is compatible with 100V to 240V AC. For using the terminal overseas, a plug adapter that conforms to your destination is needed. Do not use a transformer for overseas trip to charge the terminal.
- Use a compatible AC adapter or USB cable A to C to charge the terminal. If you use a non-compatible charger, charging may not be available or the operation may not work correctly.
- Insert and pull out an AC adapter or plug of USB cable A to C slowly and evenly without applying excessive force.
- When charging is started, the notification LED of the terminal lights in the color according to the battery level (P.65).
- You can check the battery level on the status bar at the top of screen, or operate from the Home screen, tap ▦▶[Settings]▶[Battery].

- If you start charging with the terminal powered off, the screen indicating charging status activates although you cannot operate the terminal. Therefore, do not charge the battery in a place where the powering off is required.
- If the following message appears, there is an abnormality in charging function. Stop using the terminal and ask for inspection and repair at a DOCOMO-specified repair location (at a shop or website). For inquiries, refer to the last page.

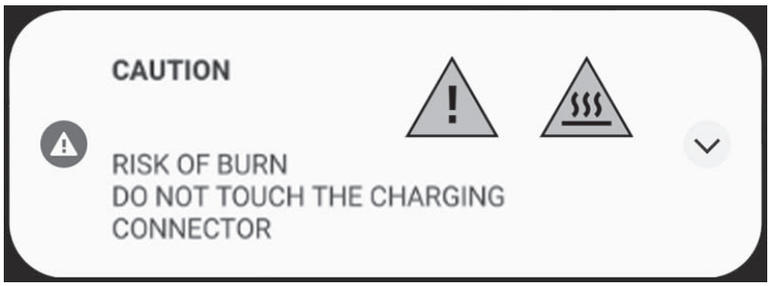

- You can check the latest charging equipment compatible with the terminal in the DOCOMO online shop.
https://onlineshop.smt.docomo.ne.jp/options/search.html (in Japanese only)

Saving battery life (Battery Care)

Battery Care is a function that learns your charging habit (time zone for connecting to charging equipment long) to adjust charging speed and keep battery performance better so as to extend battery life.

1 From the Home screen, ▶[Settings]▶[Battery]▶[Battery Care].

- The Battery Care screen appears.

2 Tap of "Use Battery Care".

❖Information

- To turn off Battery Care charging, tap of "Use Battery Care" in Step 2.
- To switch to usual charging during Battery Care charging, drag the status bar down▶Open the notification of Battery Care (P.68) ▶[REGULAR CHARGING].
- To set the time for Battery Care manually, tap [Custom] in the Battery Care screen. Battery Care charging is available when you start charging between the times set in "Start time" and "Target time for full charge".
- You can specify the upper limit of charging by tapping [Always] in the Battery Care screen. To set the upper limit of charging level, tap "Charging limit" field▶[80%]/[90%]▶[OK].
- When "Always" is set, Battery Care charging works even when charging with the power of the terminal off.

❖**Note**

- It may take 7 days or more to complete learning your habit.

Charging with AC adapter

Charge using AC Adapter 08 (optional) as follows.

1 Insert the Type-C plug of the AC adapter horizontally into the USB Type-C jack of the terminal.

2 Unfold the power plug of the AC adapter and insert it into a power outlet.

- When charging is started with the power on, the charging start sound is heard and the notification LED of the terminal turns on (P.65).

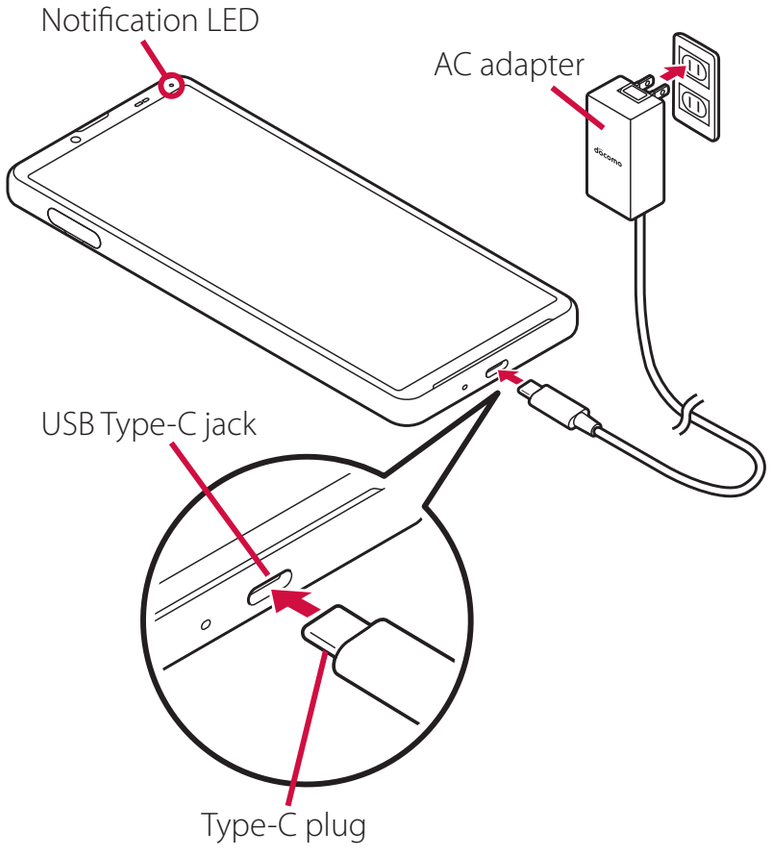

3 When charging is complete, remove the power plug of the AC adapter from the power outlet, and then remove the Type-C plug horizontally from the terminal.

❖**Note**

- Do not connect the Type-C plug of the AC adapter forcibly. Wrong connection may cause damage.

Charging with DC adapter

DC adapter is an adapter for supplying power to charge via accessory sockets (12V/24V) of cars.
For handling, refer to the manual of your DC adapter.

Charging with a PC

To charge the terminal by connecting to a PC, USB cable A to C 02 (optional) is required.

1 Insert a Type-C plug of the USB cable A to C horizontally into the USB Type-C jack of the terminal.

2 Insert a USB plug of the USB cable A to C to a USB port of PC.

- When charging is started with the power on, the charging start sound is heard and the notification LED of the terminal turns on (P.65).

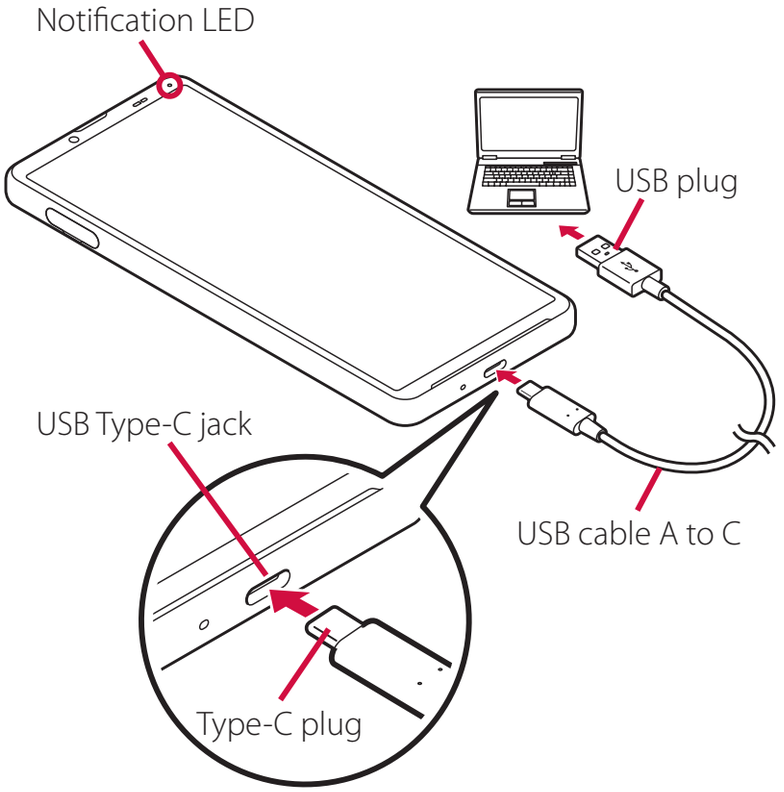

- If the installation screen for the terminal's driver software appears on your PC, please wait a moment for the installation to complete.

3 When charging is complete, remove the USB plug of the USB cable A to C from the USB port of PC and then remove the Type-C plug horizontally from the terminal.

❖Note

- Do not connect the Type-C plug of the USB cable A to C forcibly. Wrong connection may cause damage.

FCC ID

To view the regulatory compliance mark.

1 Find and tap [Settings]▶[About phone]▶[Certificates].

Regulatory compliance mark such as FCC ID is displayed on the screen.

Turning power on/off

Turning power on

1 Press and hold the power key until the terminal vibrates.

- The lock screen appears after a while.
- When you first turn on the power and "ようこそ (Welcome)" is displayed, follow the onscreen instructions to make the initial settings (P.45).

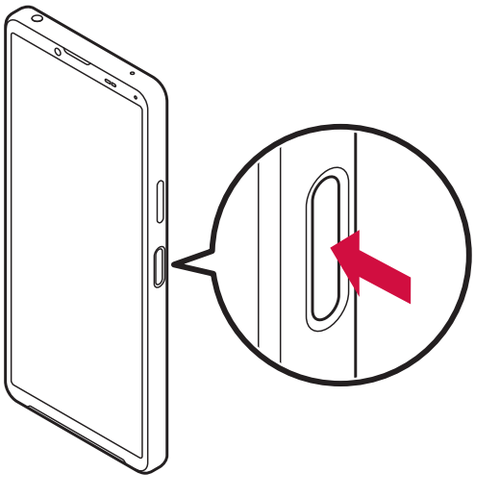

2 Unlock the screen lock.

- The Home screen appears.
- Unlocking the screen lock (P.44).

❖Information

- When PIN code (P.48) is set, enter the PIN code on the PIN code entry screen (P.48).

Turning power off

1 Press the power key and the volume up key at the same time.

2 [Power off].

- To restart the terminal, tap [Restart].

Setting sleep mode

Set sleep mode to turn off the screen so that you can avoid unintended operations of the display (touch screen) or the keys, or lock the screen.

1 Press the power key.

- Press the power key again to exit from sleep mode and turn on the screen.

❖Information

- When the specified time set in "Screen timeout" (P.179) elapses with no operation performed, the screen will turn off automatically and then go into sleep mode.

Unlocking the screen lock

The lock screen appears when you turn on the power or press the power key to exit from sleep mode.

1 On the lock screen, swipe (flick) the screen.

❖Information

- On the lock screen, touch and hold 🎙 or 📷 to use Google Assistant or the camera.
- You can change the screen lock unlocking method (P.186).
- Once you register your fingerprint in the Fingerprint Manager, you can use fingerprint authentication to unlock the screen (P.188).

Initial settings

When you first turn on the power and "ようこそ (Welcome)" is displayed, follow the onscreen instructions to make initial settings, such as individual functions and services.

1 [GET STARTED].

- Tap [日本語 (Japanese)] to change the language.
- Tap [VISUAL AIDS] to make settings related to the accessibility functions.
- Follow the onscreen instructions to make the following settings.
  - Setting the network connection
  - Verification/setting the important information
  - Copy apps & data
  - Set your Google account
  - Setting the Google services
  - Setting the screen lock
  - Setting Google Assistant

2 When the docomo initial setting screen appears, confirm the content▶[Next].

- Follow the onscreen instructions to make the following confirmations and settings.
  - Use verification of the function
  - Set d ACCOUNT
  - Easy bulk setting Safety and ease of use
  - Select Home
  - Review additional apps
  - System navigation

3 When the setup completion screen appears, [FINISH].

❖Information

- In this manual, descriptions with System navigation set to "3-button navigation" are provided.
- The displayed setting etc. may differ depending on operation of the terminal etc.
- When the confirmation screen of function use etc. appears after the completion of the initial setting, follow the onscreen instructions.
- Some settings can be changed later (P.46, P.46, P.81, P.160, P.183, P.186, P.188, P.197, P.201).
- When setting the online services, make sure to connect to the network (P.66).
- You can use the terminal without setting up a Google account, however the Google services such as Gmail, Google Play, etc. are not available.
- To show Machi-Chara, tap the notification related to display of character or information from "my daiz" and then follow the onscreen instructions.

Setting up a Google account

Google account is an ID/password to use Google services. By setting Google account to the terminal, you can use Gmail to send Email, use Google Play to download applications or contents such as games.
If you have not set up a Google account in the initial settings or to add other Google account, you can set it up as follows.

1 From the Home screen, ⊞▶[Settings]▶[Passwords & accounts]▶[Add account]▶[Google].

- After this step, follow the onscreen instructions.

❖Information

- Google account with the item that indicating backup to your Google Drive turned ON when registering on the "Google Services" screen can be registered as a backup account (P.196).
- You can use the terminal without setting up a Google account, however the Google services such as Gmail, Google Play, etc. are not available.
- To set ON/OFF of items to auto-sync, from the Home screen, ⊞▶[Settings]▶[Passwords & accounts]▶Tap the Google account▶[Account sync].

Setting up d ACCOUNT

d ACCOUNT is an ID/password that is necessary to use the services available with d Account or d points on a smartphone, tablet, or PC.
When you do not set up d ACCOUNT in the initial settings, you can set as follows.

1 From the Home screen, tap ⊞▶[Settings]▶[docomo service/cloud]▶[d ACCOUNT setting].

- If the d ACCOUNT confirmation screen etc. appears, follow the onscreen instructions.

2 [Set your d ACCOUNT]/[Create new d ACCOUNT].

- After this step, follow the onscreen instructions.

❖Information

- For details on d ACCOUNT, in Step 2, tap ☰▶[Help] to see the Help of d ACCOUNT setting.

Security codes for the terminal

Some functions provided for convenient use of the terminal require the security code to use them. Besides the security code for locking the terminal, the network security code necessary for the network services etc. are available. Make use of the terminal using an appropriate security code according to the purpose.

Notes on the security codes

- Do not use a number that is easy to guess, such as "birth date", "part of your phone number", "street address number or room number", "1111", and "1234". Make sure to make a note of the security code you set lest you should forget it.
- Be very careful not to let others know your security code. If your security code is known by anyone else, DOCOMO shall have no liability for any loss due to any unauthorized use of it.
- If you forget your security codes, you must bring your official identification (such as driver's license), the terminal, and the nano SIM card with you to a docomo Shop. For details, ask the contact on the last page.
- The PIN Unlocking Key is written on the subscription form (copy for customer) handed when subscribing at a docomo Shop. If you subscribed other than at a docomo Shop, ask the contact on the last page.

PIN/Password for screen lock

It is a security code for using the screen lock function of the terminal (P.186).

Network security code

The network security code is a 4-digit number necessary for identification or using the docomo network services at reception of your request in docomo Shop, or at docomo Information Center or "お客様サポート (Customer support)". It can be set any number at the subscription and also changed later by yourself.

- For details on network security code, refer to NTT DOCOMO website.

PIN code

nano SIM card has a security code called as PIN code. The code is set to "0000" at subscription, which you can change by yourself (P.49).

PIN code is a 4- to 8-digit security number (code) that must be entered for user confirmation to prevent unauthorized use of nano SIM card by a third party every time you insert the nano SIM card into the terminal or when the terminal is powered on. Entering the PIN code enables making/receiving calls and terminal operation.

- For using a newly purchased terminal with the nano SIM card you are using so far inserted, use the PIN code set on the former terminal. If you did not change the setting, the code is "0000".
- If you enter a wrong PIN code 3 times consecutively, the PIN code is locked and cannot be used anymore. In this case, unlock with "PIN Unlock Key (PUK code)" (P.48).

PIN Unlock Key (PUK code)

The PUK code is an 8-digit number for canceling the locked PIN code. The PUK code cannot be changed by yourself.

- If you failed to enter PUK code 10 times consecutively, the nano SIM card will be locked. In that case, ask the contact on the last page.

Setting a PIN code

By entering PIN code when powered on, you can protect from improper use.

1 From the Home screen, ▶[Settings]▶[Security]▶[SIM card lock]▶[Lock SIM card].

2 Enter PIN code▶[OK].

Entering the PIN code when powered on

1 On the PIN code entry screen, enter the PIN code.

2 .

❖Information

- When "Use SIM" (P.163) is OFF, the PIN code entry screen can be appeared after "Use SIM" is switched to ON.

Unlocking PIN lock

1 Enter the PUK code▶Tap .

2 Enter a new PIN code▶Tap .

3 Enter the PIN code again▶Tap .

Changing the PIN code

- You can change only when you activate the SIM card lock.

1 **From the Home screen, ⊞▶[Settings]▶[Security]▶[SIM card lock]▶[Change SIM PIN].**

2 **Enter the current PIN code▶[OK].**

3 **Enter a new PIN code▶[OK].**

4 **Enter the new PIN code again▶[OK].**

Basic operations

Basic operations

Using the display (touch screen)

Precautions on using the display (touch screen)

- The display (touch screen) is designed for being touched lightly with fingers. Do not push the touch screen hard with a finger or press sharp-pointed objects (nail, ballpoint pen, pin, etc.) against the screen.
- Touching the display (touch screen) may not work in the following cases. Note that it may cause a malfunction.
  - Operation with a gloved hand
  - Operation with tip of fingernail
  - Operation with foreign object on the screen
  - Operation with protective sheet or seal on the screen
  - Operation on the wet display (touch screen)
  - Operation with fingers wet with sweat or water
  - Operation under water

Operations on the display (touch screen)

■ Tap

Touch an item such as icon or menu with your finger lightly and release it.

- Double-tap means tapping twice quickly.

■ Touch and hold

Touch and hold an icon or menu item long.

■ Swipe (flick)

Touch the screen and flick up/down or left/right.

■ Drag

Touch the screen, drag to the desired position and release the finger.

■ Slide

When whole content cannot be displayed, while lightly touching the screen, move your finger to desired direction.

Scroll

When whole content cannot be displayed, flick up/down/left/right displayed content to scroll (move) the display position.

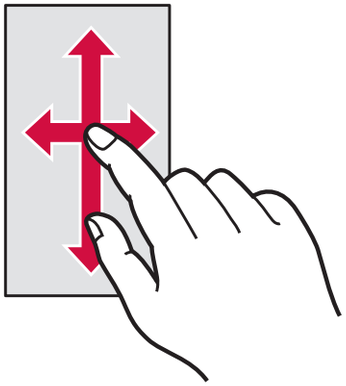

Pinch

Touch the screen with two fingers and widen (pinch-out) or narrow (pinch-in) the fingers' distance to zoom in/out screen display.

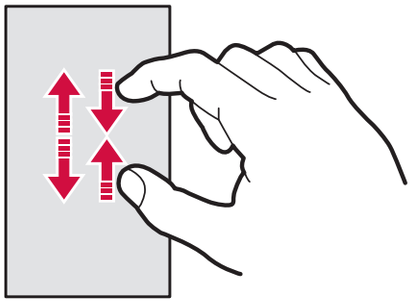

Using Side sense

Side sense is a function that allows you to operate the terminal with one hand and you can use it by operating the side sense bar displayed on the screen.

- You can operate the side sense function on every screen which the side sense bar is displayed.

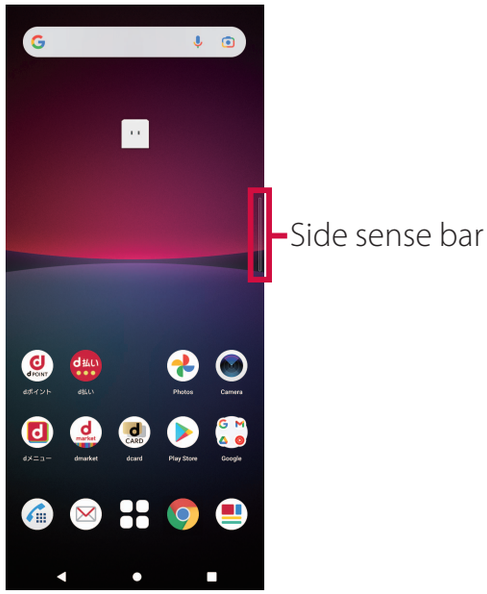

Double-tap the side sense bar to open the side sense menu from which you can activate applications or display the Notification panel. Slide the side sense bar up to display the multi-window menu from which you can activate the Multi-window (split screen). Also, slide the side sense bar down to undo the operation (returning to the previous screen).

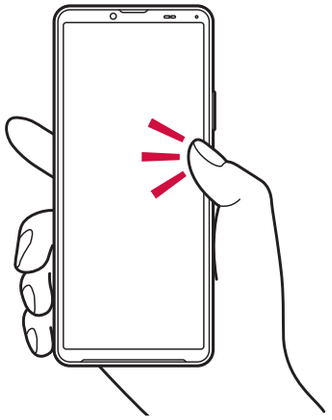

Double-tap

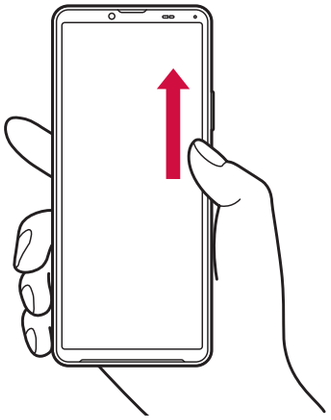

Slide up

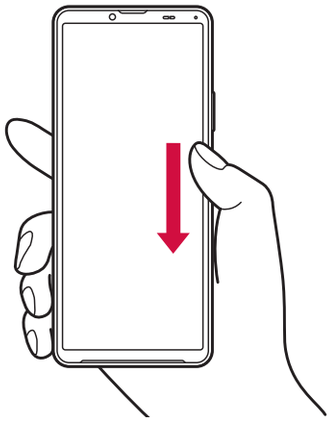

Slide down

❖Information

- You can change the operation range, sensitivity of the side sense bar, etc. in "Side sense" (P.181). Set as your preference.
- Side sense feature is not available while the shooting screen is displayed.

Moving the side sense bar

1 Touch and hold the side sense bar.

- When "Try double-tapping this bar" appears, double-tap the side sense bar to open the side sense menu, close the side sense menu, and then operate the step again.

2 Drag it to a desired location.

- When you drag it to other than the left-/right-end of the screen, the side sense bar changes to .

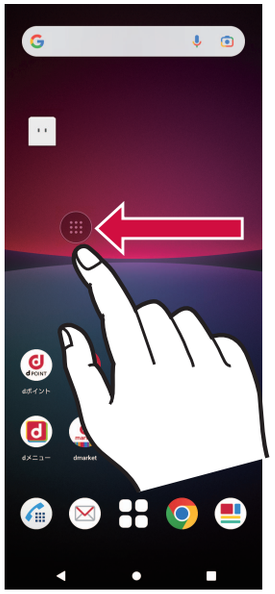

❖Information

- You can move by touching and holding and then dragging in any direction. To restore to the original display, drag it to the left- /right-end of the screen.

Using the Side sense menu

1 Double-tap the side sens bar.

- The Side sense menu appears.
- When the explanation screen appears, tap [OK].

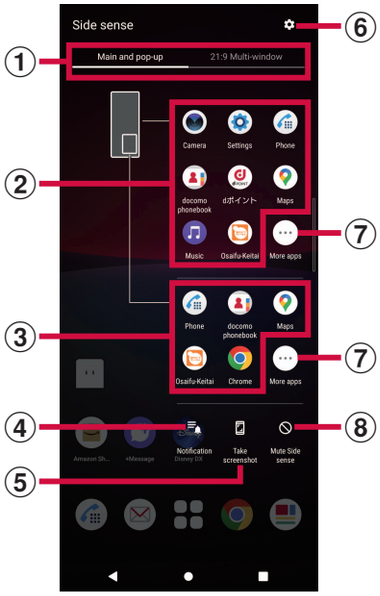

① Switch the menu
- Switch the Multi-window menu (P.54)/Side sense menu.

② Application icon list (main screen (full-screen))
- Icons of recommended applications predicted from your use condition are displayed. Tap the application icon to activate the application on the main screen (full-screen).
- You can also set to display favorite application icons (P.181).
- You can switch applications in the lower part of the screen by tapping any application icon while Multi-window (split screen) activates.

③ Application icon list (pop-up window)
- Icons of recommended applications predicted from your use condition are displayed; tap the application icon to activate the application in the pop-up window (P.73).

④ Notifications
- Open the Notification panel (P.67).

⑤ Screenshot
- You can capture the screen displayed behind the side sense menu as a still image (P.56).

⑥ Advanced
- Open the "Side sense" in the Settings menu (P.181).

⑦ More apps
- Display more applications that are not currently shown in the application icon list.

⑧ Mute Side sense
- Set to show/hide the side sense bar for each application.

❖Information

- You can move the menu position up/down by dragging the screen while the Side sense menu is displayed.
- To end the Side sense menu, perform any of the following operations.
  - Tap ● or ◀
  - Tap outside of the Side sense menu
  - Double-tap the side sens bar.

Using the Multi-window menu

You can activate Multi-window (split screen) using Side sense.

- Operations in the split screen (P.71)

1 Slide the side sense bar up

- The Multi-window menu appears.
- When the explanation screen appears, tap [OK].

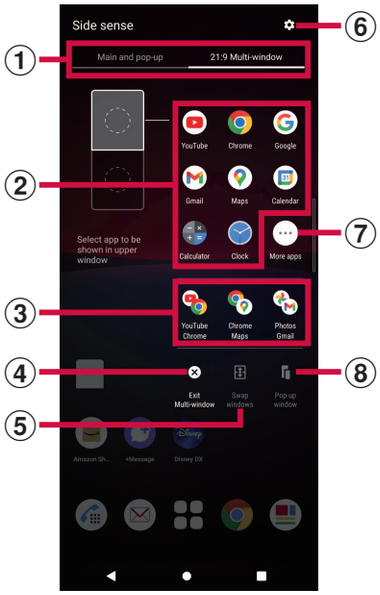

① Switch the menu
- Switch the Side sense menu (P.53)/Multi-window menu.

② Application icon list
- Icons of recommended applications predicted from your use condition are displayed; tap the application icon to activate the application in the multi-window screen (split screen).
- You can switch applications in the lower part of the screen by tapping any application icon while Multi-window (split screen) activates. To switch applications in the upper part of the screen, tap the upper part of the window illustration shown beside the Multi-window menu and then tap any application icon.

③ Pairs of applications (Combination)
- Pairs of applications which are predicted by your usage condition are displayed.
- You can also set your desired pairs to display (P.181).

④ Exit Multi-window
- Exit Multi-window (split screen).

⑤ Swap windows
- Swap applications between the upper part and lower part when Multi-window (split screen) is activated.

⑥ Advanced
- Open the "Side sense" in the Settings menu (P.181).

⑦ More apps
- Display more applications that are not currently shown in the application icon list.

⑧ Pop-up window
- Tap while the Multi-window (split screen) is activated to display the application of the lower part of the screen in the pop-up window (P.73). However, it is not available for applications that cannot be displayed in the pop-up window.

❖Information

- You can move the menu position up/down by dragging the screen while the Multi-window menu is displayed.

- To exit the Multi-window menu, perform any of the following operations.
  - Tap ● or ◀
  - Tap outside of the Multi-window menu
  - Slide the side sense bar up

Basic key icon operation

The following operations can be performed by tapping the key icon shown in the bottom of the screen.

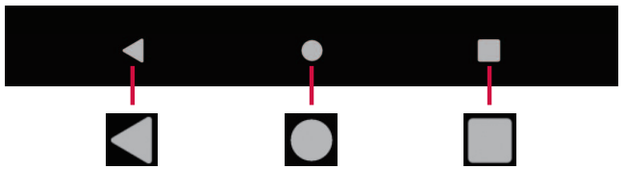

◀	Back	Go back to the previous screen. Or close the menu, the Notification panel, etc.
●	Home	Go to the Home screen. Touch and hold the icon to open the Google Assistant.
■	History	Use the task manager (P.71). Also, you can use the following functions. • Screenshot (P.56) • Split screen (P.71) • Pop-up window (P.73)

* In this manual, the key icon operations are described as ◀, ●, and ■.

❖Information

- When "One-handed mode" (P.179) is set to ON, you can use the one-handed mode by double-tapping ● (P.79).
- The color of key icon may differ depending on displayed screen.

Switching portrait or landscape view automatically

You can set the screen orientation to switch between landscape and portrait view automatically according to the terminal orientation.

1 From the Home screen, ⊞▶[Settings]▶[Display].

2 ⬭ of "Auto-rotate screen".

❖Information

- You can also switch the landscape/portrait view by tapping ⟲ if ⟲ appears when you change the terminal orientation although this feature is set to OFF.
- Some displayed screens are fixed in portrait orientation or landscape orientation.
- Changing orientation of the terminal in nearly horizontal state against the ground may not switch the screen to the portrait view/landscape view automatically.
- You can also set from the Quick settings panel (P.69).

Setting Silent mode

- Even when the silent mode is set, muting of shutter sound, start/end sound for video recording, alarm sound, and audio sound of video, music, etc. is not available.
- If the sound volume is adjusted in "Ring and notification volume" (P.178) in silent mode, the silent mode setting is canceled.
- You can adjust media volume by dragging up/down the slider on the volume control bar which appears when the volume key is pressed. Also, tap ••• to display the sound setting screen and you can change the volume of call sound, ringtone and notification sound, and alarm sound.

Setting Silent mode (Vibrate)

1 **Press the volume up or down key.**
- The volume control bar appears.

2 ▶ .
- The icon for the volume control bar changes to .

Setting Silent mode (Mute)

1 **Press the volume up or down key.**
- The volume control bar appears.

2 ▶ .
- The icon for the volume control bar changes to .

Capturing the displayed screen

You can capture the currently displayed screen as a still image (Take screenshot).

- Capturing may not be available depending on screen display.

1 **On a screen you want to capture, press and hold the power key and the volume down key at the same time.**
- A still image is saved and the thumbnail and menu are displayed for a certain period of time in the lower part of the screen.

❖Information

- You can capture the screen which is shown as a thumbnail by tapping [Screenshot] in the task manager (P.71).
- You can tap the thumbnail or menu to edit a still image or send it via Bluetooth or email. Also, you can turn off the display of the thumbnail and menu (still image remains) by tapping ⊗ at the upper right of thumbnail or swipe (flick) the thumbnail left or right.
- When "Capture more" is displayed in the menu, you can save a still image with capturing range changed. To change the capturing range, tap [Capture more]▶ Drag the frame to specify the range▶[SAVE].

Recording the displayed screen

You can record the currently displayed video screen (Screen record).

- Recording may not be available depending on currently displayed screen.

1 Drag the status bar down with two fingers.

- The Quick settings panel appears.

2 Swipe (flick) the Quick setting tools left.

3 [Screen record].

- The confirmation screen for start of recording appears. Set "Record audio" etc. before start of recording.

4 [Start].

- Recording starts and and appear on the status bar.
- To stop recording, drag the status bar down and then tap [STOP] in the notification of "Screen Recorder".

Selecting an application to use

When you have some options of applications for certain operations such as sending an email or displaying an image, an application selection screen appears.

<Example> To select an application for sending email

1 From the Home screen, ▶ [docomo phonebook]▶Select a contact▶Select a mail address.

- The application selection screen appears.

2 Select the application▶[Just once]/[Always].

- Select "Just once" to view available applications each time, or "Always" to use the same application all the time. If you select "Always", the application selection screen does not appear the next time you perform the same task.
- If you selected "Just once" previously for the same task, the screen with the application selected appears. To use another application, select in the "Use a different app" area.

❖Information

- Some tasks may require you to select an application each time, with "Just once" or "Always" not displayed on an application selection screen.
- To release application with "Always" set, from the Home screen, tap ▦▶[Settings]▶[Apps]▶[See all XX apps]▶Tap an application you want to release the setting▶[Open by default]▶[CLEAR DEFAULT PREFERENCES].

Setting an application's permissions

When the first time you activate an application or function that accesses the other functions or information of your terminal, the confirmation screen to request permissions to access rights may appear. When you approve these access rights, the corresponding functions and information become available to the application/function.

<Example> When activating the "Schedule" application for the first time

1 From the Home screen, ▦▶[Schedule].

- The explanation screen about permission may appears.

2 [OK].

- The confirmation screen appears.

3 [ALLOW]/[DON'T ALLOW]

- When the other confirmation screen appears, confirm the content and then repeat the operation.

❖Information

- If permission is not granted, some applications/functions may not work, or use of the functions may be limited.
- To change setting of permissions, from the Home screen, tap ▦▶[Settings]▶[Apps]▶[See all XX apps]▶Tap any application you want to change the setting▶[Permissions]▶Tap the permission to change▶[Allow]/[Don't allow].
- Depending on application/function, the explanation screen about permission may not appear. Also, number of times of the confirmation screen or the display may differ. Check the displayed contents carefully and follow the onscreen instructions.
- In this manual, description of the confirmation screen may be omitted.

Character entry

Enter characters using the software keyboard (On-screen keyboard) which appears when you tap the character input box in a mail, phonebook, etc.
Input method is set to "Gboard" by default.

❖Information

- To hide software keyboard, tap ▼ displayed at the lower left of the screen.
- For details on Gboard, in the character entry screen, tap ⚙▶ ⋮ ▶[Help & feedback] and then refer to Help.
- Depending on your usage condition, keyboard display or the operations may be changed.

Switching the input method

You can change to the input method other than Gboard.

- You can operate it when the other input method is installed on the terminal and set it as a use keyboard in "Manage on-screen keyboards" (P.196).

1 While entering characters, tap ⌨ at the bottom of the screen.

- The input method selection screen appears.

2 Select the input method you want to use.

❖Information

- When the input method you want to use is not listed in the selection screen, tap ◯ of the input method you want to use in "Manage on-screen keyboards" (P.196).

Software keyboard

The default software keyboard is a Japanese keyboard and its layout is "12 keys" when the language is set to Japanese. You can add the following layouts to the Japanese keyboard.

- Character input method (P.60)

12 keys	Keyboard with the same key arrangement as a mobile phone. Repeatedly tap a key to select a character (multi-tap input). Flick input is also available.
QWERTY	Keyboard with characters allocated in the same arrangement as general PCs. Enter Japanese in Roman character. Flick input is also available.
Handwriting	Keyboard for inputting characters by handwriting.
GODAN	Keyboard for inputting Japanese with roman characters.

Adding the layout for Japanese keyboard

To use the layouts other than 12 keys, add them beforehand.

1 **In the character entry screen, ⚙▶[Languages].**

2 **[Japanese 12 keys].**

3 **Put checkmarks to the layouts▶[Done].**

❖Information

- Once the layout is added, 🌐 will be displayed on the software keyboard and the keyboard can be switched every time you tap the icon. Also, touch and hold 🌐 or ␣ to display the keyboard change screen and you can switch the keyboards.
- To add the other language's keyboard, in Step 2, tap [ADD KEYBOARD]▶Select the language etc.▶Select the country, region, etc. as required▶Put checkmarks to the layouts▶[Done]. Available layouts vary by language.
- If the layout selection screen appears when you tap the character entry field, you can set the layout for Kana or Alphabet mode.

Character input method

When you tap a key on the software keyboard, candidates list for the entered characters appears. Tap a word to enter from the candidate list, text can be input one after another.
Japanese keyboard in 12 keys and QWERTY layouts is explained in this section.

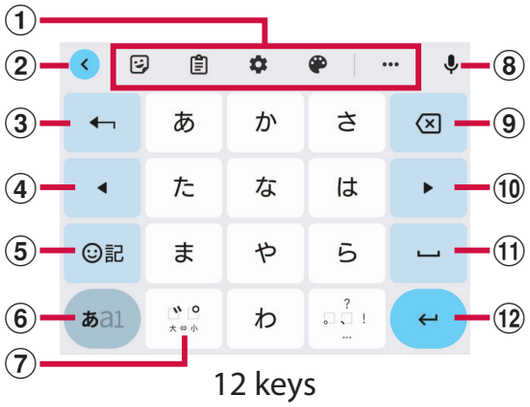

12 keys

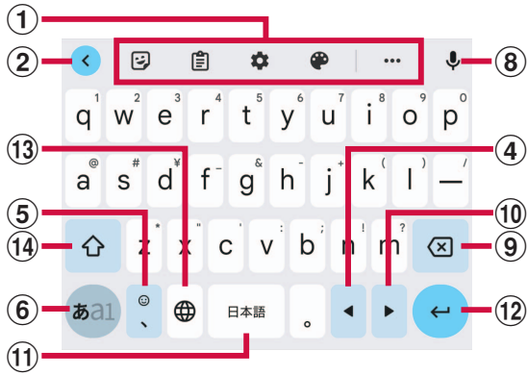

QWERTY

① Tool bar
Displays the tool icon list (P.62).

② ❮ / ❯
Switches the tool icon to hide/display.

③
Shows characters entered by Multi-tap input (P.63) in the order that is reverse of the regular one. Or undoes character conversion after it is decided.

④
Moves the cursor to the left. Or changes range of character conversion when it is not yet decided. Swipe (Flick) up/down/left/right to move the cursor (the operation may not be available depending on condition).

⑤ ☺記 /
Display the list of emoji/sticker/smiley etc.
In QWERTY keyboard, enters a punctuation mark. Touch and hold it to display the icons and you can switch to the one-handed mode, or display the list of emoji etc. or the setting screen.

⑥ あa1 / あa1 / あa1
Switches the character mode to "Kana"→"Alphabet"→"Number" in order. Touch and hold it to display icons with which you can display the Settings screen or switch to the one-handed mode.

⑦ 大⇔小
Puts a sonant mark/p-sound mark, or switches to uppercase/lowercase.

It is appeared when the layout for Japanese keyboard or the keyboard for other language is added. Tap it to switch the keyboard. Touch and hold it to display the keyboard change screen.

⑧
Switch to voice input to enter characters with voice.

⑨
Deletes the character before the cursor.

⑩
Moves the cursor to the right. Or changes range of character conversion when it is not yet decided. Swipe (Flick) up/down/left/right to move the cursor (the operation may not be available depending on condition).

⑪ / 日本語
Enters a space. Before confirming conversion when entering characters in Kana mode, the display changes to "変換 (Convert)". Tap it to display/switch the conversion candidates. Touch and hold it to display the keyboard change screen (the operation may not be available depending on condition).

⑫
Enters a line feed. Tap it to decide characters before conversion is decided.
* In some screens, , , , , etc. appear.

⑬
Switches the keyboards each time you tap. Touch and hold it to display the keyboard change screen.

⑭ /
Switches entries between lower case letter and first capital letter. Double-tap to change the key to for entering upper case letter.

❖Information

- To enlarge the display area, tap in the candidate list. To display the software keyboard, tap .

Using the tool icon

Tap the tool icon on the tool bar to operate as follows.

(Sticker)	Display the list of emoji/sticker/smiley etc.
(Clipboard)	Quote characters saved to the clipboard and enter characters.
(Settings)	Display the Settings screen.
(Theme)	Change software keyboard theme.
•••	Display the list of tool icons that are not displayed in the tool bar. • Touch and hold the tool icon and drag to the tool bar to display in the tool bar.
(One-handed)	Switches to the software keyboard whose size can be operated with one hand.
(Text Editing)	Select, cut, copy, or paste characters.
(Share Gboard)	Send information such as the current layout via Bluetooth, email, etc.
(Translate)	Translate word, sentence, etc. and enter it.
(Floating)	Allow the software keyboard to move to the other position.

Flick input

Touch a key of 12 keys to display a character, number, or symbol that are assigned to the key. Flick to the direction of a target character etc. to enter the character.

- On the QWERTY keyboard, flick each key up or down to enter number or symbol.

<Example> Entering "な" column character on 12 keys

You can enter "な" only by tapping. Flick left for "に", up for "ぬ", right for "ね" and down for "の".

Multi-tap input

On the 12 keys keyboard, tap the same key consecutively to enter a character, number, or symbol that is assigned to the key.
To enter characters etc. assigned to the same key consecutively, wait until the color of the cursor indicating the conversion range is changed (approx. 1 second) and then enter the next character. To enter the next character soon, tap ▶ to change the color of cursor.

<Example> Entering "あお"

1 **Tap "あ" once▶Wait for approximately 1 second (until the color of cursor is changed).**

2 **Tap "あ" 5 times.**

or

1 **Tap "あ" once▶ ▶ (immediately).**

2 **Tap "あ" 5 times.**

Editing text

You can cut or copy text in character entry screen or web page and then paste it to the other application etc.

1 **Touch and hold text.**
- The text is selected and the edit menu appears nearby.
- Alternatively, double-tap text.

2 **Drag / to up/down/left/right to select range of the text.**

3 **Tap the item in the edit menu.**

Cut	Cut a selected character string.
Copy	Copy a selected character string.
Paste	Paste a copied/cut character string.
Share	Use a selected text in the other application.
Select all	Select all text.
Web search	Search for web information related to a selected character string.
⋮	Display the editing menu that could not be shown. Tap ← to return to the previous editing menu.

❖Information

- To paste a copied or cut character string, touch and hold a position to insert▶Tap [Paste]. When text is already entered, tap a position to insert▶ ▶Tap [Paste].
- On some applications, these functions may not be available or the editing menu may appear different.

Personal dictionary

Add words to Personal dictionary beforehand to have them appeared preferentially in the candidate list when entering characters.

1 **In the character entry screen, ▶[Dictionary]▶[Personal dictionary]▶Select a language.**

2 +.

3 **Follow the onscreen instructions to enter a word and the reading.**

4 ←.

❖Information

- To delete registered words, in Step 2, select the words to delete▶ .

Setting character entry

Set character entry per input method such as Gboard.

1 **From the Home screen, ▶[Settings]▶[System]▶[Languages & input].**

2 **[On-screen keyboard]▶Select the input method.**

- Tap an item displayed on the screen to set.

❖Information

- The items vary depending on the input method.
- For Gboard, alternatively, tap in the character entry screen to display the Settings screen.
- If the input method is not displayed, in Step 2, [On-screen keyboard]▶[Manage on-screen keyboards]▶Tap of the input method you want to use.

Notification LED

Notification LED provides information on the terminal status, incoming calls, mail reception, etc.

LED color and lighting	Indication
Red	Charging (the battery level is 14% or less)
Orange	Charging (the battery level is 15% - 89%)
Green	Charging (the battery level is 90% or more)
Flashing red	The battery level is 14% or less

❖Information

- For notification such as missed call, it flashes in different color by application.

Screen display and the icons

You can check notifications from applications, the terminal status, etc. with the icons on the status bar. Display the Notification panel to check detail information such as notifications appeared in the status bar. Also, you can open the Quick settings panel and set ON/OFF of the functions.

Status bar

In the status bar at the top of screen, the notification icons of new mail, running operation, etc. and the status icons of the signal status, battery level, etc. appear.

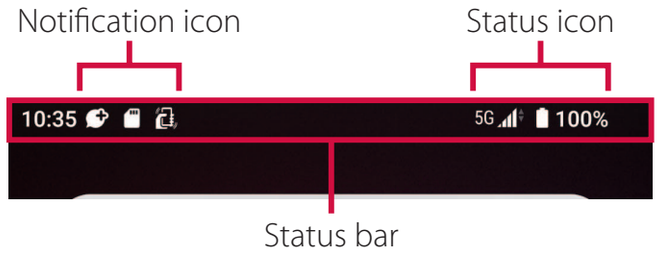

❖Information

- When an application accesses the camera or microphone, / / appears on the screen for a certain period of time and is displayed on the status bar during the access. While is displayed, you can check which application has been accessing by opening the Notification panel or Quick settings panel.

Status icon

The main status icons displayed on the status bar are as follows.

	Signal strength*1	—
5G	5G available	—
4G+	4G (LTE) available*2	—
	During International roaming	—
	Out of service	—
	Connected to Wi-Fi*1*3	P.160
	Connected to a Wi-Fi network with the Internet unavailable, and Wi-Fi signal is unstable*3	P.161
	Portable hotspot (Wi-Fi tethering) ON	P.166
	Connected to Bluetooth device	P.205
	Airplane mode activated	P.165
	Silent mode (vibrate) ON	P.56
	Silent mode (no vibrate) is set	P.56
	Calling with hands-free (speaker ON)	P.108
	Calling with the mouthpiece/ microphone OFF (mute)	P.107
	Alarm etc. is set	P.153
	Do Not Disturb is set	P.174
	Positioning with GPS	P.150
	Connected to VPN	P.169
	Data Saver is set	P.168
	Recording with Screen record	P.57
	STAMINA® mode ON	P.175
	Battery status	—
	The battery is charging	P.39
	Charging is required	—

*1 appears on the right of the icon during communication.

*2 4G+ is always displayed when the terminal is connected with LTE.

*3 The number appeared at the left of the icon varies by the wireless LAN (Wi-Fi) standard that is currently connected.

Notification icon

The main notification icons displayed on the status bar are as follows.

	New Gmail message	P.123
	New +Message message	P.117
	Receiving/downloading data	—
	Sending/uploading data	—
	Notification of data reception etc. via Bluetooth communication	P.206
	microSD card is detected/currently mounted	P.38
	Update notice of application	—
	Software update notification	P.225
	Call is incoming/dialing/During a call	P.103
	Call is on hold	P.107
	Missed call	P.109
	Notification from Answering Machine/voicemail	P.106, P.110
	Notification from Memo/Schedule	P.99, P.152
	Stopwatch is running*	P.154
	Timer is in use*	P.154

	Alarm is sounding/Alarm is snoozing/ Next alarm exist	P.153
	USB device is connected	P.176
	Screen mirroring in use	P.170
	Wi-Fi open network available	P.162
	Charging with Battery Care	P.40
	Battery is low (15% or less)	—
	Notification of error/warning	—
	Hidden notifications	—
	Omakase Lock is set	—
	Notification from docomo Data Copy	P.155
	SuguApp is available	P.75
	Notification for Screen record	P.57
	Available internal storage is getting low	—
	Authentication failed when you set up your d ACCOUNT	P.46

* Appears when switched to the Home screen etc.

Notification panel

When the notification icons appear on the status bar, you can open the Notification panel to check the notifications, activate corresponding application, etc.

1 Drag the status bar down.

① Quick setting tools
- A part of the quick setting tools (P.69) are displayed.
- Tap it to turn on/off each function.
- Touch and hold it to display the setting screen, etc. depending on function.

② Notifications
- When is displayed, tap to activate an application in pop-up window (P.73).
- Swipe (flick) left or right the notification to clear from the list. However, some notifications may not be cleared.
- Touch and hold the notification to change the notification setting or set "Silent", "Default", etc. However, the setting may not be available for some notifications.
- If / appears when a notification in Conversations is unfolded, you can set to show/hide the floating icon (bubble). The floating icon (bubble) can be shown even while the other application is running so that you can check arrival notifications in Conversations or check/send messages by tapping it.

③ Manage
- Change notification setting (P.173).
- It is shown as "History" when "Notification history" (P.173) is set to ON and you can check the notification history.

④ Notification of access to the camera or microphone
- This appears while an application is accessing the camera or microphone.
- Tap / / to display the notification and you can check which application has been accessing. Also, tap the notification with shown to display the app permission screen and you can change the permission setting.

⑤ Open/Close the notification
- Tap to open the notification to fully display the content or the operation menu.
- Some notifications may not be displayed or opened by tapping.

⑥ Operation menu
- The operation menu such as "CALL BACK" or "REPLY" may appear when a notification is unfolded.
- For some notifications, operations such as replying a message of +Message may be available by tapping the item of the operation menu on the Notification panel.

⑦ Clear notifications
- It appears when there is any notification that can be cleared and you can clear all notifications under the "Silent" section. However, some notifications may not be cleared.

⑧ Clear all
- It appears when there are any notifications that can be cleared to clear all notifications. However, some notifications may not be cleared.

❖Information

- The control panel for Music etc. may be displayed below the quick setting tools depending on operation condition, with which you can play/pause a song, switch the audio output, etc.
- To hide the floating icon (bubble), touch and hold the floating icon (bubble)▶Drag it to any direction a little▶Drag it to ⊗ at the bottom of the screen.
- To close the Notification panel, tap ◁ or drag the Notification panel up.
- Even when the notification icon is not displayed on the status bar, the notification etc. indicating the terminal status may be displayed.
- You can also check the notification on the lock screen by swiping (flicking) down the screen to open the Notification panel (Notifications newly arrived after the screen lock is set and some notifications can be displayed without any operation). You can set to hide notifications on the lock screen with "Notifications on lock screen" (P.173) or always display the notifications with "Keep notifications" (P.174).

Quick settings panel

Set ON/OFF etc. of each function.

1 Drag the status bar down with two fingers.

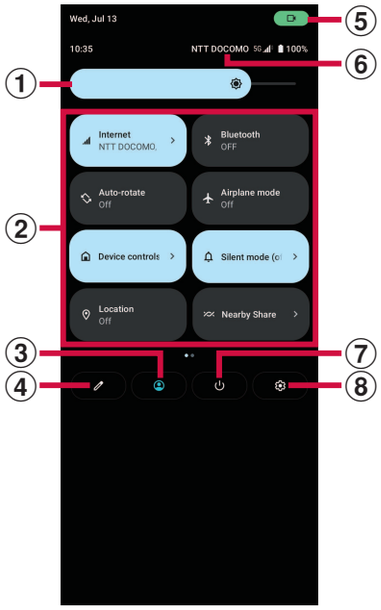

① Brightness level
- Adjust the screen brightness.

② Quick setting tools
- Touch and hold it to display the setting screen, etc. depending on function.
- When the indicator of the number of pages and the current page position appears below the quick setting tools, swipe (flick) the quick setting tools left or right to switch the page.

Internet	Switch network that can access the Internet, or set ON/OFF of "Mobile data" or "Wi-Fi".
Bluetooth	Set ON/OFF of Bluetooth function.

Auto-rotate	Set whether to switch portrait/ landscape view automatically according to the terminal orientation.
Airplane mode	Enable/disable Airplane mode.
Device controls	Show a controller of smart home device (commercially available) etc. connected to the terminal to operate.
Silent mode (XXXX)*	Set silent mode.
Location	Enable/disable location information.
Nearby Share	Share a file with nearby compatible device.
Flashlight	Set ON/OFF of the flash/photo light.
STAMINA mode	Enable/disable STAMINA mode.
Hotspot	Set ON/OFF of portable hotspot function.
Screen record	Record the currently displayed screen (P.57).

* In "XXXX", the silent mode status appears.

③ Multiple users
- When the icon is not displayed, turn "Multiple users" (P.199) to ON.
- You can switch the user of the terminal, add a user/guest, or remove the guest.
- Tap [USE SETTINGS] to display "Multiple users" in the Settings menu (P.199).

④ Edit
- Display the edit screen to add, delete or rearrange the quick setting tools.
- In the edit screen, ⋮ ▶[Reset] to restore to the default.

⑤ Notification of access to the camera or microphone (P.68)

⑥ Name of network operator

⑦ Display the Power menu
- Tap this to display the Power menu and you can operate "Emergency", "Power off", "Restart" or "Force restart guide".

⑧ Settings
- Display the setting menu (P.158).

❖Information

- The quick setting tool may be automatically added depending on usage condition.
- You can also open the Quick settings panel by dragging down the Notification panel or dragging down the status bar on the lock screen.
- The control panel for Music etc. may be displayed below the quick setting tools depending on operation condition, with which you can play/pause a song, switch the audio output, etc.
- To close the Quick settings panel, drag it up.

Task manager

Display recently used applications as thumbnails to confirm, open, switch between, or close them.

1 □.

- Applications are displayed as thumbnails.
- Swipe (flick) left or right to switch the thumbnails.

❖Information

- Tap a thumbnail to open or switch the application. However, depending on the displayed thumbnails, the application may not be opened.
- Swipe (flick) a thumbnail up to clear the thumbnail and exit the application. Tap [Clear all] in the lower part of the screen or at the left end of thumbnail area to clear all thumbnails.
- When "App pinning" (P.186) is set to ON, tap the icon displayed in the upper part of thumbnail▶[Pin]▶[GOT IT] to pin the screen so that you cannot use the other applications except the currently displayed one. To cancel pinning, follow the onscreen instructions.
- Use the menu on the bottom of the screen for the following operations.
  - Screenshot (P.56)
  - Pop-up window (P.73)
  - Multi-window switch (P.72)

Split screen

Split the screen to display and operate two applications at the same time.

- Activate the applications to display beforehand.
- Split screen may not be available depending on application.

1 □.

- Applications are displayed as thumbnails.

2 **Tap an icon appeared in the top of a thumbnail▶[Split screen].**

- For applications which are not available for the split screen, "Split screen" does not appear.

3 **Tap the application thumbnail to display from the lower part of the screen.**

- If you select the application which is not available in the split screen, the confirmation screen for asking if you end Multi-window (Split screen) and activate the application appears.

- When a thumbnail of application you want to display is not shown, tap ● to activate the application. However, if you activate the application that is not available in the split screen, it is displayed in the main screen (full-screen).

❖Information

- The application windows of the split screen can be displayed up and down in the portrait view and left and right in the landscape view.
- Drag ▬ of the split line displayed in the center of the split screen up or down (in the landscape view, left or right) to change the range of the application display.
- To end the split screen, drag ▬ to the top end or bottom end of the screen (left end or right end for the landscape view).
- When the home app is Xperia Home, touch and hold an application icon shortcut in the Home screen, or touch and hold an application icon in the Application screen and then tap [Split screen] or ⊟ in the shortcut menu to activate the split screen.

Switching applications (Multi-window switch)

1 In the split screen, tap ▬ of the split line.

- ⊕ appears on the split line.
- To change the display position, drag ⊕ on the divider line left or right (up or down for the landscape view).

2 ⊕.

- The application thumbnails are displayed in the upper - lower panes (left - right panes in the landscape view)

3 Display the application thumbnail or the name you want to switch to.

- Swipe (flick) the thumbnail left/right (up/down in the landscape view) to display the thumbnail or name of the application you want to switch to.
- Alternatively, tap [All apps] displayed in the left/right end (upper/lower end in the landscape view) of the thumbnail line▶Tap the application to display it.

4 [Done].

❖Information

- Alternatively, in Step 3, tap the pair of applications (combination) displayed in the bottom of the screen (left/right in the landscape view) to switch the applications.
- To change the application that is displayed last, in the split screen, tap ⊟ and select the application thumbnail, or tap ●▶Activate the application to display.
- Alternatively, you can use the multi-window switch by tapping [Multi-window switch] in the task manager (P.71).

Pop-up window

You can display an application that is activated in the pop-up window over another application displayed in the main screen (full-screen).

- Activate an application to display beforehand.
- Using in pop-up window may not be available depending on application.

1 □.

- Applications are shown as thumbnails.

2 **Display a thumbnail of application to activate.**

- Swipe (flick) thumbnails left/right (flick) to display a thumbnail of the application you want to activate.

3 **[Pop-up window].**

- A pop-up window appears on the thumbnail.
- If "Pop-up window" cannot be selected, activating the application in pop-up window is not available.

4 **Tap a thumbnail of another application.**

- The application is displayed under the pop-up window in the main screen (full-screen).
- When a thumbnail of application you want to display is not shown, tap ● to activate the application.
- To switch the applications to operate, tap the display area of the application in pop-up window or main screen (full-screen).

❖Information

- Alternatively, tap the icon shown at the top of thumbnail in Step 3▶[Pop-up window] to activate the application in pop-up window.
- To show a pop-up window over the split screen, tap the icon shown at the top of thumbnail in Step 4▶[Split screen]▶Tap a thumbnail of another application.
- Pop-up window can be activated from the following functions/screens.
  - Side sense menu (P.53)
  - Notifications on the Notification panel (P.68)
- Pop-up window may not be available depending on operation condition such as when Camera is activated.

Pop-up window

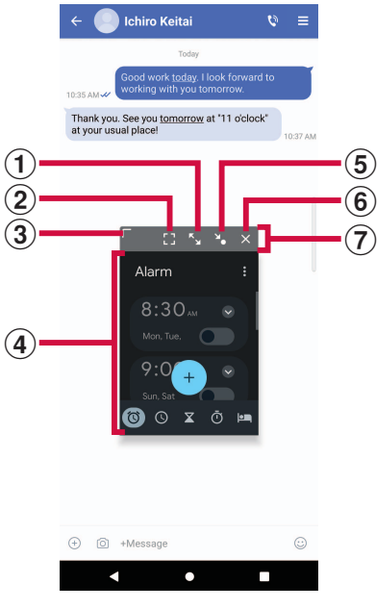

① Maximize
- Tap when it is maximized to return to the original display.

② Switch to the main screen (full-screen)/split screen
- Switch to the main screen (full-screen). When the split screen is activated, the application is displayed in the lower part of the screen.

③ Change the size
- Drag to any direction to change the size of pop-up window.

④ Operation area of application
- When the area for displaying the operation icons does not appear, drag the operation area of the application in any direction to move.

⑤ Iconify
- Iconified application is displayed. Tap it to restore the original display. Drag an iconified application to any direction to move, or drag it to in the upper part of the screen to close the pop-up window.

⑥ Close
- Close the pop-up window

⑦ Display area for operation icons
- Appears when operating the application shown in pop-up window. When it is not displayed, tap the operation area of the application.
- Drag an area where there is no icon in any direction to move the pop-up window.
- Position of the display area or shape of operation icons may vary depending on operation condition.

SuguApp

Set "SuguApp" which you can activate an application or operate the phone call instantly with intuitive handling just like shaking a smartphone.

1 From the Home screen, tap ⊞▶[Settings]▶[docomo service/cloud]▶[SuguApp].

- When the explanation screen etc. appears, follow the onscreen instructions.

Shake 1-time	Set an application to activate when the terminal is shaken once.
Simultaneous display of icons	Set the other application to be displayed simultaneously when using the Shake 1-time function.
Shake 2-times	Set an application to activate when the terminal is shaken twice.
Simultaneous display of icons	Set the other application to be displayed simultaneously when using the Shake 2-times function.
SuguApp Operation Deterrence	Set an application to restrict its activation by SuguApp function.
Suguden setting	Set the phone operations (Answer, Disconnect, Call, Mute, Reject) only by motion or voice command (P.76).

❖Information

- In the following case, SuguApp does not work properly.
  - When making or receiving an additional call during a call
  - While lying down
  - When you perform vigorous exercise such as running, going up and down stairs, etc.
- By default, "d払い(d Barai)" app is set to "Shake 1-time".
- SuguApp function is not available when the screen is OFF, while the lock screen is displayed, or during a call.
- If you put the terminal into a bag or pocket when the screen is ON, an application may activate in rare cases because that is recognized as a motion performance.
- When SuguApp function is available, the notification icon is displayed. You can also confirm notification detail from the Notification panel.
- Either of the "SuguApp" or "Suguden (Call) " feature can only be available.
- For details on SuguApp, refer to NTT DOCOMO website.
- Simultaneous display of icons may not be available depending on applications set to Shake 1-time or Shake 2-times.

Suguden setting

Set "Suguden" which allows you to operate phone with the motion and the voice command.

1 From the Home screen, ▶ ⋮.

2 [Settings]▶[Calls]▶[Suguden setting].

- Alternatively, operate from the Home screen, tap ▶[Settings]▶[docomo service/cloud]▶[SuguApp]▶[Suguden setting].

Answer	Answer calls by placing the terminal to your ear.
Disconnect (Motion/ Voice command)	End a call by motion or voice command. When "Motion" is ON, calls can be disconnected by placing the terminal horizontally with the screen faced down or by shaking the terminal twice during a call. When the "Voice command" is ON, calls can be disconnected by saying the disconnect keyword while talking and then detaching your ear from the terminal.
Call	Make a call to the other party who is registered in advance by shaking the terminal once with the Home screen and then placing it to your ear.
Mute, Reject	Mute the incoming ringtone or reject a call by placing the terminal horizontally with the screen faced down while a call is incoming, or shaking the terminal twice. You can select from "Mute", "Reject", or "Reject and send SMS".
Disable Suguden during roaming	Turn off Suguden function automatically overseas.

Notes on using Suguden

- In the following case, Suguden does not work properly.
  - When using speakerphone
  - When using an earphone or headset
  - When the terminal is connected to a Bluetooth device which has calling function (Disconnect (Voice command), Call (Motion))
  - When making or receiving an additional call during a call
  - While lying down
  - When you perform vigorous exercise such as running, going up and down stairs, etc.
  - When the display is covered with a book type smartphone case etc.
- If you put the terminal into a bag or pocket while on the incoming screen, the call may be answered or rejected in rare cases because that is recognized as a motion performance.

- The proximity sensor does not respond well to black objects.
  When answering a call, if you put the earpiece over your hair, the proximity sensor may have trouble working and may failure to answer a call. In this case, please put the earpiece directly on your ear.
  When disconnecting (Motion)/muting or rejecting a call, flipping over the terminal on a black desk, etc. may cause the operation (Disconnect (Motion)/Mute, Reject) to fail. In this case, instead of placing the terminal directly on the surface, flip over the terminal about 1 cm above the desk etc. to operate (Disconnect (Motion)/Mute, Reject).
- When the Suguden function is available, the notification icon appears. You can also confirm notification detail from the Notification panel.
- For details on Suguden, refer to NTT DOCOMO website.

Functions of Suguden

Disconnect (Motion)

- When the motion is performed, a call will be disconnected even in the following cases.
  - When the other party puts the call on hold
  - When the Answering Machine is running (playing the answering message/recording a message)
- When disconnecting a call with Suguden motion, it may not react (disconnect) if the speed of motion for placing the terminal facing down is fast. In that case, try the motion slowly to react (disconnect).
- When "Disconnect" is ON, a call may be disconnected if you shake the terminal strongly even just once during the call because the action is recognized as motion performance.

Disconnect (Voice command)

- When the disconnect keyword is heard, a call will be disconnected even in the following cases.
  - When the other party puts the call on hold
  - When the Answering Machine is running (playing the answering message/recording a message)
- While calling with Disconnect (Voice command) ON, other application using the mouthpiece/microphone or a voice recording application etc. using the voice sound during a call may not be available. To use those application during a call, turn off the both settings of Disconnect (Voice command) and then start calling.

- When the Answering Machine is running (while playing the answering message/ recording a message), Disconnect (Voice command) function is not available. In the case that you answer a call while recording with the Answering Machine, Disconnect (Voice command) function is available.
- For calls using "Jspeak", Disconnect (Voice command) function is not available.
- Although the voice command function of Suguden uses the voice recognition technology and the language processing technology, DOCOMO is not liable for any accuracy of those technologies.
- The voice recognition may fail when the volume of voice is too small during a call or calling under a noisy environment, or depending on the way of utterance.

● Call

- A Suguden call can be made from the Home screen or the lock screen (only when "Screen lock" (P.186) is set to "Swipe").
- Either of the "SuguApp" or "Suguden (Call) " feature can only be available.

● Mute, Reject

When "Mute, Reject" is set to ON, the function set in "Mute, Reject" may be performed when you shake the terminal strongly even just once while a call is incoming because the action is recognized as motion performance.

● Disable Suguden during roaming

Suguden is disabled automatically overseas by default setting. To use Suguden overseas, turn off "Disable Suguden during roaming" in Suguden setting.

One-handed mode

Use One-handed mode to slide the screen down so that your finger can easily reach the top part of the screen.

Setting One-handed mode

1 From the Home screen, ▶ [Settings]▶[Display]▶ [One-handed mode].

2 Tap of "Use one-handed mode".

❖Information

- When "Double tap Home to" field is set to "Show notifications", the Notification panel is opened by double-tapping .
- Tap [One-handed mode shortcut] to set the shortcut operations to use One-handed mode.

Using One-handed mode

1 Double-tap .

- The screen is slid downward.

❖Information

- To exit One-handed mode, tap the area that "Using one-handed mode" is displayed in the upper part of the screen.
- The one-handed mode may end automatically depending on operation condition, for example, when a certain time of period has passed with no operation while using One-handed mode, or the screen turns off or switches to the landscape view.

Searching website information etc.

Enter words in the search box to search information.

1 From the Home screen, tap the Google search widget.

2 Enter a keyword to search.
- Character entry (P.59)
- The search candidate list appears.

3 Tap the search suggestion or 🔍 of the software keyboard.

❖Information
- Alternatively, from the Home screen, tap [Google]▶[Google] to open the "Google" application.
- When the search candidates include applications, the applications can be activated by selecting.
- You can set search etc. by opening the Google account menu in the search result screen etc.▶Tap [Settings].

Using Google Voice Search

Enter a search key word by voice.

1 From the Home screen, tap 🎤 on the Google Search widget.

2 Speak a search key word to the mouthpiece/microphone.

Home screen

Switching the home app

You can switch the home app for the terminal to "docomo LIVE UX", "Xperia Home" or "Simple Home".

- "docomo LIVE UX" (P.81)
- "Xperia Home" (P.89)
- "Simple Home" (P.92)

1 From the Home screen, ▦▶[Settings]▶[Apps].

2 [Default apps]▶[Home app].

3 Tap any of [docomo LIVE UX]/[Simple Home]/[Xperia Home].

- When you select "Simple Home", confirm the content and tap [OK].

❖Information

- When the home app is switched, widgets or application icon shortcuts on the screen may not be displayed correctly depending on the home screen layout etc.

docomo LIVE UX

It is a home app that DOCOMO offers you. You can customize the home screen intuitively.

For details on docomo LIVE UX, from the Home screen, tap ▦▶ ⋮ ▶[Help] to see Help, or refer to the following website.

https://www.docomo.ne.jp/service/live_ux/index.html (in Japanese only)

Home screen layout

You can activate applications or use widgets in the Home screen. All of applications are stored in the Application screen and the application icon shortcuts are located in the Home screen.

- Swipe (flick) the Home screen left or right to switch the pages.
- When the application has a notification, a dot or number may appear on the upper right of the icon or folder.

① Widget
- Activate the widget (Google Search).
- For some widgets, you can display the shortcut menu by touching and holding the widget to perform specific operations.

② Machi-Chara
- Tap to ask something you want to know through dialog.
- By default, Machi-Chara is not displayed on the Home screen (P.84).

③ Application icon shortcuts
- Tap to activate the application.
- Touch and hold to display the shortcut menu from which you can perform specified operations or check the application information. When ═ is displayed, touch and hold and then drag it to any location to add the shortcut of specified operation to the Home screen.

④ Indicator
- This indicates the current display position of the Home page.
- This is appeared only when you swipe (flick) the Home screen left or right.

⑤ Dock
- This is always displayed even when the Home screen page is switched.

⑥ Apps button
- Display all of applications. You can also search applications or use Osusume Apps (P.86).

⑦ Customizing area
- You can locate application icon shortcuts, widgets, folders, etc.

⑧ Folder
- It contains the multiple application icon shortcuts etc.

⑨ My Magazine
- Display My Magazine (P.87).

❖Information

- If there is any notification that indicates update of application or pause of setup, or any double-framed application icon shortcut in the Notification panel, download the application (P.102).

Managing the Home screen

Moving application icon shortcut etc.

1 **In the Home screen, touch and hold an application icon shortcut or widget you want to move.**

2 **Drag it to a desired position.**
- To move it to the next page, drag it to the end of the Home screen.

Adding an application icon shortcut

1 **From the Home screen, ⊞.**

2 **Touch and hold an application icon you want to add to the Home screen.**
- The shortcut menu appears.

3 **[Add to Home screen].**
- It is also possible to add the multiple same application icon shortcuts.

Removing an application icon shortcut from the Home screen

1 **In the Home screen, touch and hold an application icon shortcut to remove.**

2 **Drag it in any direction a little▶Drag it to "Remove" in the upper part of the screen.**
- Although the application icon shortcut is removed from the Home screen, the application itself is not uninstalled.

Removing a widget etc.

1 **In the Home screen, touch and hold a widget or folder you want to remove.**

2 **Drag it in any direction a little▶Drag it to "Remove" or ☒ in the upper part of the screen.**

Uninstalling an application

- Before uninstalling, back up all of the related contents which you want to save including the data saved in the application.
- Some applications cannot be uninstalled.

1 **In the Home screen, touch and hold an application icon shortcut you want to uninstall.**
- To uninstall an application stored in a folder, tap the folder and then touch and hold the application icon shortcut.

2 **Drag it in any direction a little▶ Drag it to "Uninstall" in the upper part of the screen.**

- For applications that cannot be uninstalled, "Uninstall" is not shown.

3 **[OK].**

- When an application is uninstalled, the application icon is also deleted from the Application screen.

Renaming folder

1 **In the Home screen, tap a folder.**

2 **Tap the folder name or [Edit Name].**

3 **Enter a folder name.**

- When entry is finished, tap ✓ on the software keyboard.

Setting the Home screen

1 **Touch and hold an area of the Home screen where no icons etc. are displayed▶[Home settings].**

Notification dots	Turn on/off the dots or numbers which indicate notifications from applications.
Add icons to home screen	Select whether to automatically add an application icon shortcut to the Home screen or display the application icon only in the Application screen when a new application is installed. • By default, installed applications are displayed only in the Application list.
Add home settings icon	Turn ON/OFF in the Home screen.
Wallpapers	You can change the wallpapers of the Home screen and the lock screen.
Machi-Chara*	Set Machi-Chara ON/OFF, change of character, etc.
Osusume Apps settings	Set the display of "Osusume Apps" contents in the Application screen.
Display my daiz NOW	Set the display of my daiz NOW which is located in the leftmost page of the Home screen.
My Magazine	Turn ON/OFF of flick-up activation of My Magazine.
Get started	Check the tutorial of the Home screen.
Help	Check how to use the Home screen in detail.

* To display Machi-Chara, operate as follows.

■ docomo LIVE UX

1 Touch and hold an area of the Home screen where no icons etc. are displayed▶[Home settings]▶[Machi-Chara].

- The "キャラ (Chara)" setting screen appears.

2 Tap of "キャラ表示 (Display of character)" to turn off▶Tap to turn it to on again.

- The "Display over other apps" setting screen appears.

3 [my daiz]▶Tap of "Allow display over other apps".

■ Xperia Home

1 Swipe (flick) the Home screen up▶Tap " ドコモ (docomo)" folder▶[my daiz].

2 Follow the onscreen instruction (in Japanese only) to verify/set.

- When "Display over other apps" setting screen appears, tap [my daiz]▶Tap of "Allow display over other apps".

■ Simple Home

1 On the Simple Home screen, [Apps]▶[my daiz].

2 Follow the onscreen instruction to verify/set.

- When "Display over other apps" setting screen appears, tap [my daiz]▶Tap of "Allow display over other apps".

Application screen

It is appeared when ⊞ is tapped in the Home screen. In the Application screen, you can find applications sorted in the order of use or installation, or search them by application name. Also, you can check the selected applications which are recommended to you now.

- Application list (P.97)

① Search apps bar
- Tap to enter characters to search applications.

② Osusume Apps
- Up to 4 selected applications or services from Osusume Apps are displayed.

③ All apps
- All applications installed to the terminal are displayed. Tap to activate the application.

④ More apps
- Display the Osusume Apps screen (P.86).

⑤ Pull-down menu
- You can sort all the applications in the Application screen by "Recent", "Name" or "Installed".

Using Osusume Apps

Applications or services are recommended according to your usage condition.

1 From the Home screen, ⊞.

2 [Osusume Apps].
- When using it for the first time, the confirmation screen for use appears. Tap [ENABLE] to display the explanation screen. In the explanation screen, tap [おすすめアプリ一覧へ (To Osusume Apps list)] to display the Osusume Apps screen and enable the notifications from Osusume Apps.

3 Select an application or service.
- A screen for introducing the application or a service page appears.

❖Information

- In the Osusume Apps screen, ⚙▶Tap ◯ / ● of each setting to switch it to ON/OFF.
- When you have agreed the terms of use of Osusume Apps, tap ⊞ on the Home screen to display the selection content of Osusume Apps. To display the Osusume Apps screen, tap [See more].

マイマガジン (My Magazine)

My Magazine is a safe and secure news application that allows you to check topic news/articles in the world, articles according to your interest and taste, great value coupons, and comics that are suitable to kill time collectively. According to the tendency of articles you read and your profile information, the more you use, the more it comes close to your preference. You can also customize the display of categories, notification of information, area for the constellation or weather, etc.

Viewing articles

1 From the Home screen, .

- When the initial screen appears, tap [規約に同意して利用を開始 (Agree the agreement and start use)].
- The list screen of articles per category is displayed.
- Alternatively, swipe (flick) the Home screen up to open the list of articles per category.
- Swipe (flick) left or right to switch categories.

2 Tap an article you want to read.

- Tap an article in the article list screen to read the detail of the article.

Adding categories to display

1 From the Home screen, .

2 ≡▶[ジャンル追加 (Add category)].

- You can add categories to the article list screen by tapping them in the category list.

Removing/rearranging the displayed categories

1 From the Home screen, .

2 ≡▶[ジャンル削除・並べ替え (Remove/rearrange categories)].

- You can remove/rearrange categories from the category list.

my daiz NOW

my daiz NOW is a service which delivers convenient information according to your preference or behavior. You can readily check information which is convenient for daily life such as weather, traffic, or gourmet.

Displaying my daiz NOW

1 In the leftmost page of the Home screen, swipe (flick) right.

- Swipe (flick) up or down to switch cards to be displayed.
- Swipe (flick) left to return to the Home screen.
- If the confirmation screen for use appears, tap [my daizを使ってみる (I'll try "my daiz")] and follow the onscreen instructions.

2 Tap a card you want to read.

- Tap a card to view the detail information.
- Tap my daiz (character) appeared in the upper left of screen to ask something you want to know through dialog.

Setting the display

Set to show/hide my daiz NOW.

1 Touch and hold an area of the Home screen where no icons etc. are displayed▶[Home settings].

2 Tap ● of "Display my daiz NOW".

- my daiz NOW disappears.
- To display it again, tap ○ of "Display my daiz NOW".

Home app information

You can check the version information etc. of docomo LIVE UX.

1 From the Home screen, ⊞▶ ⋮ .

2 [About].

- If the update of docomo LIVE UX is available, "Update now" is displayed in the application information screen. Tap it to update docomo LIVE UX.

Xperia Home screen

This section describes the Home screen displayed when the home app is set to "Xperia Home".

① Widget : Clock widget

② Machi-chara
- Tap to ask something you want to know through dialog.
- By default, Machi-Chara is not displayed on the Home screen (P.84).

③ Application icon shortcuts
- Touch and hold to display the shortcut menu where you can perform specified operations or check the application information. When ═ is displayed, touch and hold and then drag it to any location to add a shortcut of specified operation to the Home screen.

④ Folder
- It contains the multiple application icon shortcuts etc.

⑤ Dock
- Locate application icon shortcuts or folders. They are always displayed even if the page of the Home screen is switched.

⑥ Widget : Google Search

⑦ Wallpaper

⑧ Widget : Window manager
- Tap to display the Side sense menu (P.53).

❖Information

- Swipe (flick) the Home screen up to open the Application screen.
- In the Home screen, swipe (flick) the part above the dock left or right to switch the pages and the indicator of the current location appears above the dock.
- Touch and hold an application icon shortcut etc. and drag it to the left end/right end of the screen to move to the next page. Also, drag the rightmost page to the right end of the screen to add a home screen page.
- You can add widgets, change the wallpaper, etc. by touching and holding an area of the Home screen where no icons, etc. are displayed.
- Swipe (flick) the Home screen down to open the Notification panel.
- If there is any notification that indicates update of application or pause of setup, or any double-framed application icon shortcut in the Notification panel, download the application (P.102).
- A dot or number may appear on the application icon shortcut or folder when the application has a notification.

Adding folders on the Home screen

You can store application icon shortcuts etc. added to the Home screen to a folder to organize them.

1 From the Home screen, touch and hold an icon▶Drag it over another icon.

❖Information

- To store an icon into a folder, touch and hold an icon in the Home screen▶Drag it over a folder.
- To rename a folder, tap a folder▶Tap the folder name or [Edit Name].
- To delete a folder, touch and hold the folder in the Home screen▶Drag it to "Remove" which appears in the upper part of the screen. The application icon shortcuts etc. in the folder are also deleted.

Adding a widget to the Home screen

Widget is an application which can be added to the Home screen to use. Use a widget to start an application easily.

1 Touch and hold an area of the Home screen where no icons, etc. are displayed.

2 [Widgets].

- When the explanation screen appears, tap [OK].

3 Tap the type of widgets▶Touch and hold a widget to add.

- When the Home screen appears, drag it to anywhere.
- If the settings screen etc. appears, follow the onscreen instructions.

❖Information

- If a frame is displayed when a widget added to the Home screen is touched and held, you can drag the frame to resize the widget.
- To remove a widget, in the Home screen, touch and hold the widget▶Drag it in any direction a little as required▶Drag it to "Remove" or ✕ in the upper part of the screen.