Test Laboratory: Sporton International Inc. SAR/HAC Testing Lab Date: 2015/5/25

System Check_Head_750MHz_150525

DUT: D750V3-1132

Communication System: CW; Frequency: 750 MHz;Duty Cycle: 1:1
Medium: HSL_750_150525 Medium parameters used: f = 750 MHz; σ = 0.898 mho/m; ε_r = 43.176; ρ = 1000 kg/m^3
Ambient Temperature：23.3 ℃； Liquid Temperature：22.3 ℃

DASY5 Configuration:
- Probe: ES3DV3 - SN3270; ConvF(6.62, 6.62, 6.62); Calibrated: 2014/9/26;
- Sensor-Surface: 2mm (Mechanical Surface Detection)
- Electronics: DAE4 Sn778; Calibrated: 2014/8/21
- Phantom: SAM_Left; Type: QD000P40CD; Serial: TP:1542
- Measurement SW: DASY52, Version 52.8 (2);SEMCAD X Version 14.6.6 (6477)

Configuration/Pin=250mW/Area Scan (61x61x1): Measurement grid: dx=15mm, dy=15mm
Maximum value of SAR (interpolated) = 2.48 mW/g

Configuration/Pin=250mW/Zoom Scan (5x5x7)/Cube 0: Measurement grid: dx=8mm, dy=8mm, dz=5mm
Reference Value = 55.155 V/m; Power Drift = -0.17 dB
Peak SAR (extrapolated) = 3.070 mW/g
SAR(1 g) = 2.11 mW/g; SAR(10 g) = 1.41 mW/g
Maximum value of SAR (measured) = 2.45 mW/g

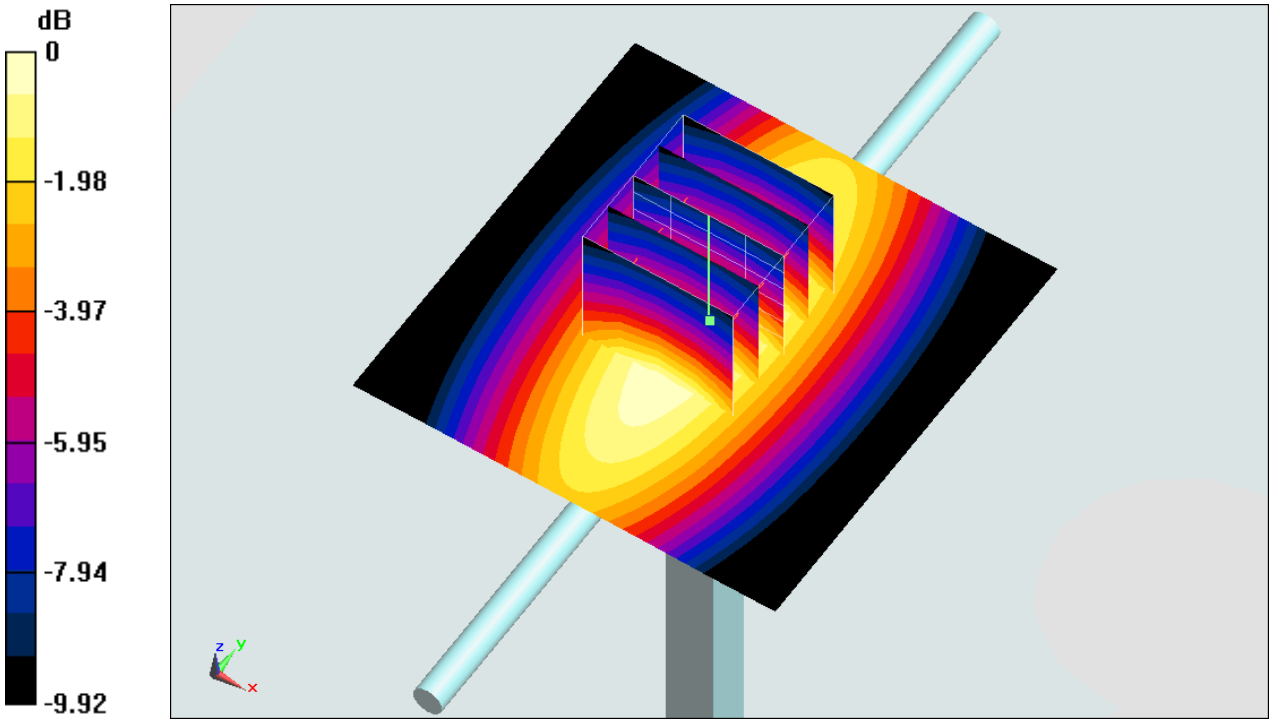

0 dB = 2.45 mW/g = 7.78 dB mW/g

Test Laboratory: Sporton International Inc. SAR/HAC Testing Lab Date: 2015/5/24

System Check_Body_750MHz_150524

DUT: D750V3-1132

Communication System: CW; Frequency: 750 MHz;Duty Cycle: 1:1
Medium: MSL_750_150524 Medium parameters used: f = 750 MHz; σ = 0.97 mho/m; ε_r = 54.646; ρ = 1000 kg/m^3
Ambient Temperature：23.5 ℃； Liquid Temperature：22.5 ℃

DASY5 Configuration:
- Probe: ES3DV3 - SN3270; ConvF(6.17, 6.17, 6.17); Calibrated: 2014/9/26;
- Sensor-Surface: 2mm (Mechanical Surface Detection)
- Electronics: DAE4 Sn916; Calibrated: 2014/12/29
- Phantom: SAM_Left; Type: QD000P40CD; Serial: TP:1542
- Measurement SW: DASY52, Version 52.8 (2);SEMCAD X Version 14.6.6 (6477)

Configuration/Pin=250mW/Area Scan (61x61x1): Measurement grid: dx=15mm, dy=15mm
Maximum value of SAR (interpolated) = 2.61 mW/g

Configuration/Pin=250mW/Zoom Scan (5x5x7)/Cube 0: Measurement grid: dx=8mm, dy=8mm, dz=5mm
Reference Value = 53.452 V/m; Power Drift = -0.02 dB
Peak SAR (extrapolated) = 3.207 mW/g
SAR(1 g) = 2.25 mW/g; SAR(10 g) = 1.52 mW/g
Maximum value of SAR (measured) = 2.62 mW/g

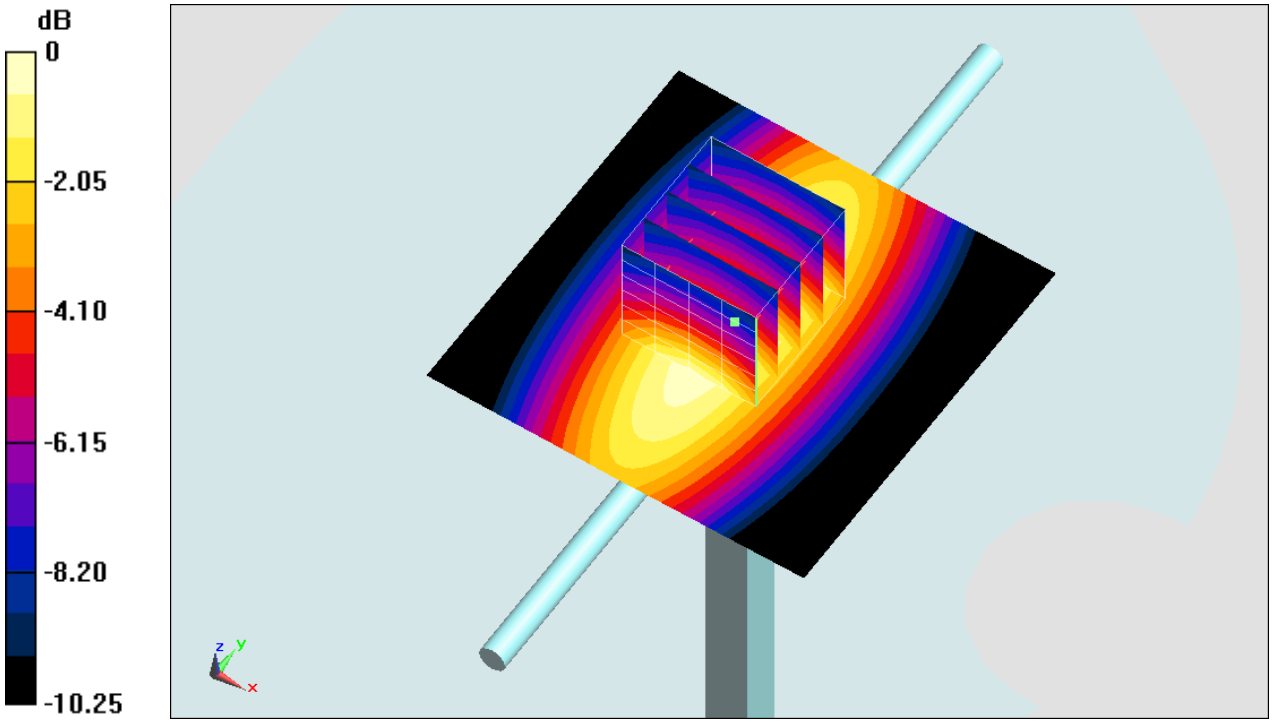

0 dB = 2.62 mW/g = 8.37 dB mW/g

Test Laboratory: Sporton International Inc. SAR/HAC Testing Lab Date: 2015/5/17

System Check_Head_835MHz_150517

DUT: D835V2-499

Communication System: CW; Frequency: 835 MHz;Duty Cycle: 1:1
Medium: HSL_850_150517 Medium parameters used: f = 835 MHz; σ = 0.877 mho/m; ε_r = 43.2; ρ = 1000 kg/m^3
Ambient Temperature：23.4 ℃； Liquid Temperature：22.4 ℃

DASY4 Configuration:
- Probe: EX3DV4 - SN3697; ConvF(8.93, 8.93, 8.93); Calibrated: 2014/9/29
- Sensor-Surface: 1.4mm (Mechanical Surface Detection)
- Electronics: DAE4 Sn1388; Calibrated: 2014/9/24
- Phantom: SAM_Right; Type: SAM; Serial: TP-1303
- ;Postprocessing SW: SEMCAD, V1.8 Build 159

Pin=250mW/Area Scan (61x61x1): Measurement grid: dx=15mm, dy=15mm
Maximum value of SAR (interpolated) = 2.92 mW/g

Pin=250mW/Zoom Scan (5x5x7)/Cube 0: Measurement grid: dx=8mm, dy=8mm, dz=5mm
Reference Value = 58.5 V/m; Power Drift = 0.128 dB
Peak SAR (extrapolated) = 3.46 W/kg
SAR(1 g) = 2.3 mW/g; SAR(10 g) = 1.5 mW/g
Maximum value of SAR (measured) = 2.93 mW/g

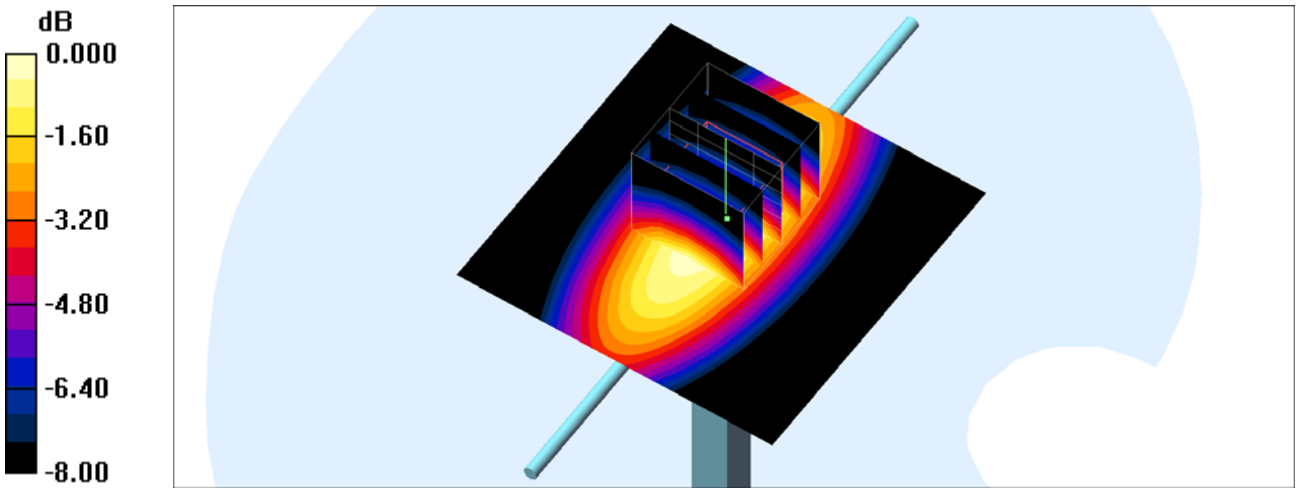

0 dB = 2.93mW/g

Test Laboratory: Sporton International Inc. SAR/HAC Testing Lab Date: 2015/5/25

System Check_Head_835MHz_150525

DUT: D835V2-499

Communication System: CW; Frequency: 835 MHz;Duty Cycle: 1:1
Medium: HSL_850_150525 Medium parameters used: f = 835 MHz; σ = 0.902 mho/m; ε_r = 42.289; ρ = 1000 kg/m^3
Ambient Temperature：23.4 ℃； Liquid Temperature：22.4 ℃

DASY5 Configuration:
- Probe: ES3DV3 - SN3270; ConvF(6.43, 6.43, 6.43); Calibrated: 2014/9/26;
- Sensor-Surface: 2mm (Mechanical Surface Detection)
- Electronics: DAE4 Sn778; Calibrated: 2014/8/21
- Phantom: SAM_Left; Type: QD000P40CD; Serial: TP:1542
- Measurement SW: DASY52, Version 52.8 (2);SEMCAD X Version 14.6.6 (6477)

Configuration/Pin=250mW/Area Scan (61x61x1): Measurement grid: dx=15mm, dy=15mm
Maximum value of SAR (interpolated) = 2.75 mW/g

Configuration/Pin=250mW/Zoom Scan (5x5x7)/Cube 0: Measurement grid: dx=8mm, dy=8mm, dz=5mm
Reference Value = 52.926 V/m; Power Drift = 0.02 dB
Peak SAR (extrapolated) = 3.507 mW/g
SAR(1 g) = 2.34 mW/g; SAR(10 g) = 1.54 mW/g
Maximum value of SAR (measured) = 2.73 mW/g

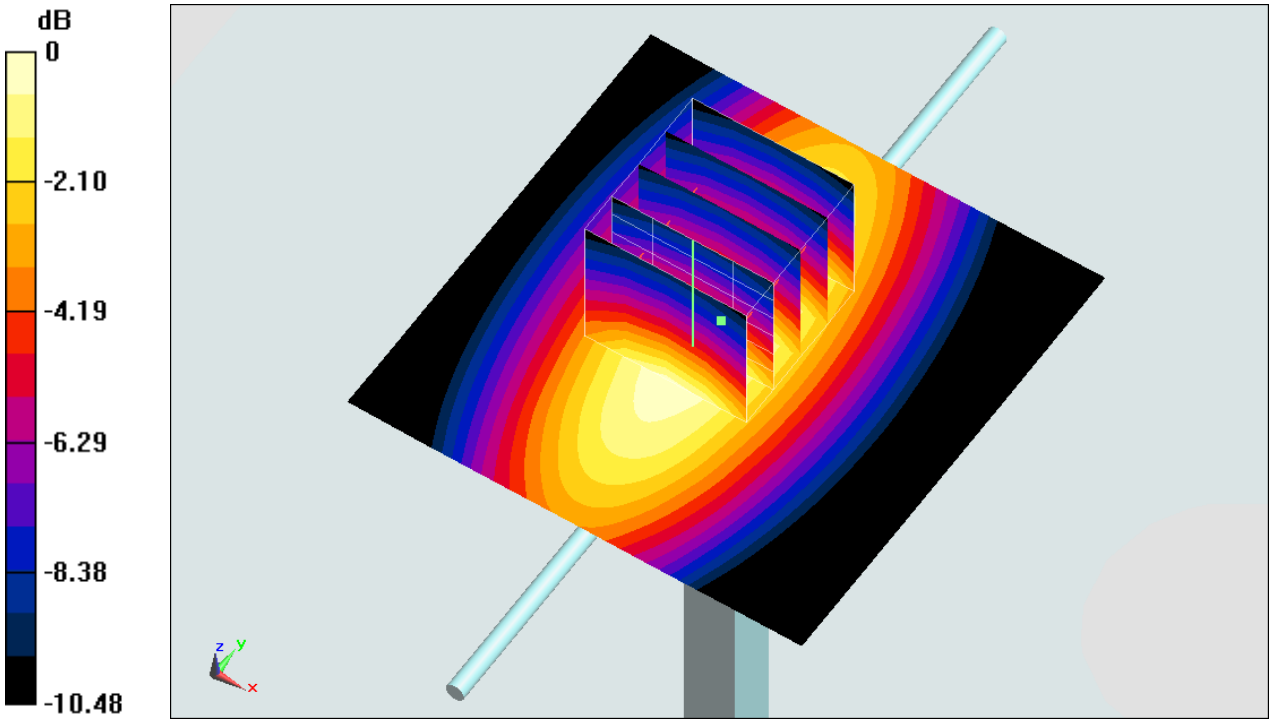

0 dB = 2.73 mW/g = 8.72 dB mW/g

Test Laboratory: Sporton International Inc. SAR/HAC Testing Lab Date: 2015/5/22

System Check_Body_835MHz_150522

DUT: D835V2-499

Communication System: CW ; Frequency: 835 MHz;Duty Cycle: 1:1
Medium: MSL_850_150522 Medium parameters used: f = 835 MHz; σ = 0.99 mho/m; ε_r = 57.599; ρ = 1000 kg/m^3
Ambient Temperature：23.4 ℃； Liquid Temperature：22.4 ℃

DASY5 Configuration:
- Probe: EX3DV4 - SN3955; ConvF(10.03, 10.03, 10.03); Calibrated: 2014/11/21;
- Sensor-Surface: 1.4mm (Mechanical Surface Detection)
- Electronics: DAE4 Sn1399; Calibrated: 2014/11/13
- Phantom: SAM_Left; Type: QD000P40CD; Serial: TP:1542
- Measurement SW: DASY52, Version 52.8 (2);SEMCAD X Version 14.6.6 (6477)

Configuration/Pin=250mW/Area Scan (61x61x1): Measurement grid: dx=15mm, dy=15mm
Maximum value of SAR (interpolated) = 2.94 mW/g

Configuration/Pin=250mW/Zoom Scan (5x5x7)/Cube 0: Measurement grid: dx=8mm, dy=8mm, dz=5mm
Reference Value = 55.514 V/m; Power Drift = -0.03 dB
Peak SAR (extrapolated) = 3.413 mW/g
SAR(1 g) = 2.32 mW/g; SAR(10 g) = 1.53 mW/g
Maximum value of SAR (measured) = 2.92 mW/g

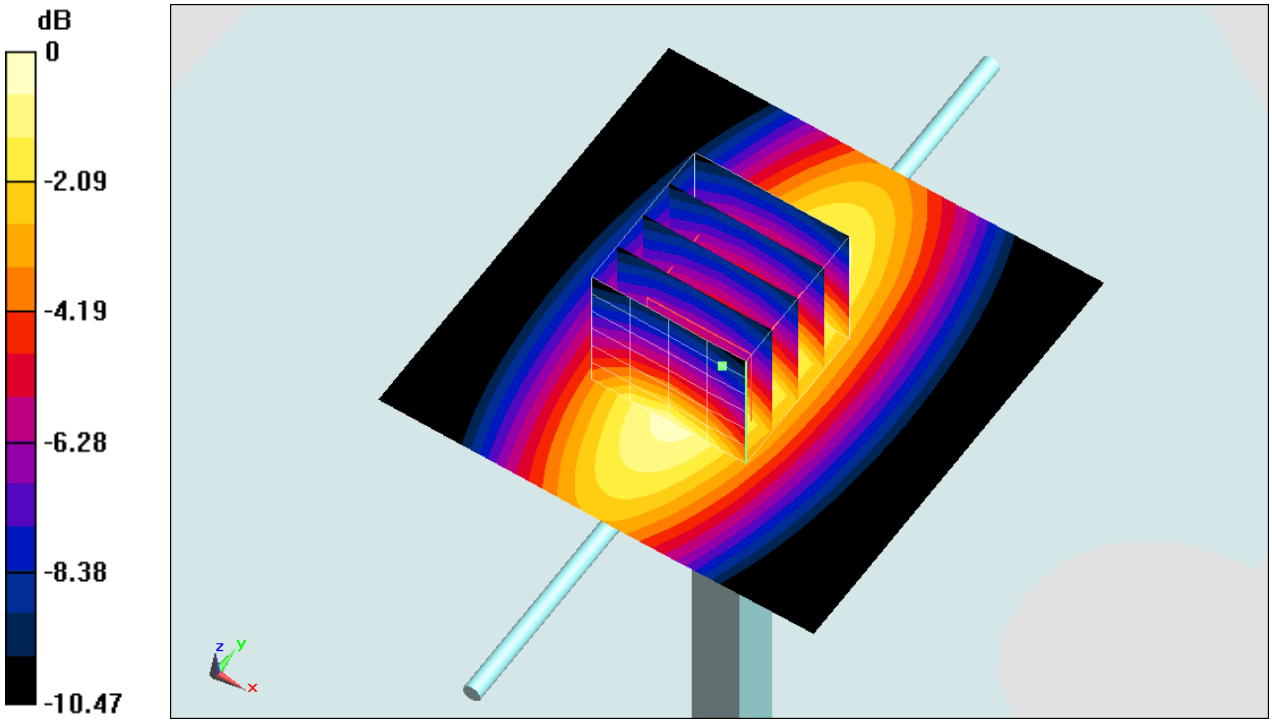

0 dB = 2.92 mW/g = 9.31 dB mW/g

Test Laboratory: Sporton International Inc. SAR/HAC Testing Lab Date: 2015/5/25

System Check_Head_1750MHz_150525

DUT: D1750V2-1137

Communication System: CW; Frequency: 1750 MHz;Duty Cycle: 1:1
Medium: HSL_1750_150525 Medium parameters used: f = 1750 MHz; σ = 1.366 mho/m; ε_r = 39.761; ρ = 1000 kg/m^3
Ambient Temperature：23.4 ℃； Liquid Temperature：22.4 ℃

DASY5 Configuration:
- Probe: ES3DV3 - SN3270; ConvF(5.25, 5.25, 5.25); Calibrated: 2014/9/26;
- Sensor-Surface: 2mm (Mechanical Surface Detection)
- Electronics: DAE4 Sn916; Calibrated: 2014/12/29
- Phantom: SAM_Right; Type: QD000P40CC; Serial: TP:1383
- Measurement SW: DASY52, Version 52.8 (2);SEMCAD X Version 14.6.6 (6477)

Configuration/Pin=250mW/Area Scan (61x61x1): Measurement grid: dx=15mm, dy=15mm
Maximum value of SAR (interpolated) = 10.3 mW/g

Configuration/Pin=250mW/Zoom Scan (5x5x7)/Cube 0: Measurement grid: dx=8mm, dy=8mm, dz=5mm
Reference Value = 82.916 V/m; Power Drift = 0.05 dB
Peak SAR (extrapolated) = 13.296 mW/g
SAR(1 g) = 8.49 mW/g; SAR(10 g) = 4.93 mW/g
Maximum value of SAR (measured) = 10.2 mW/g

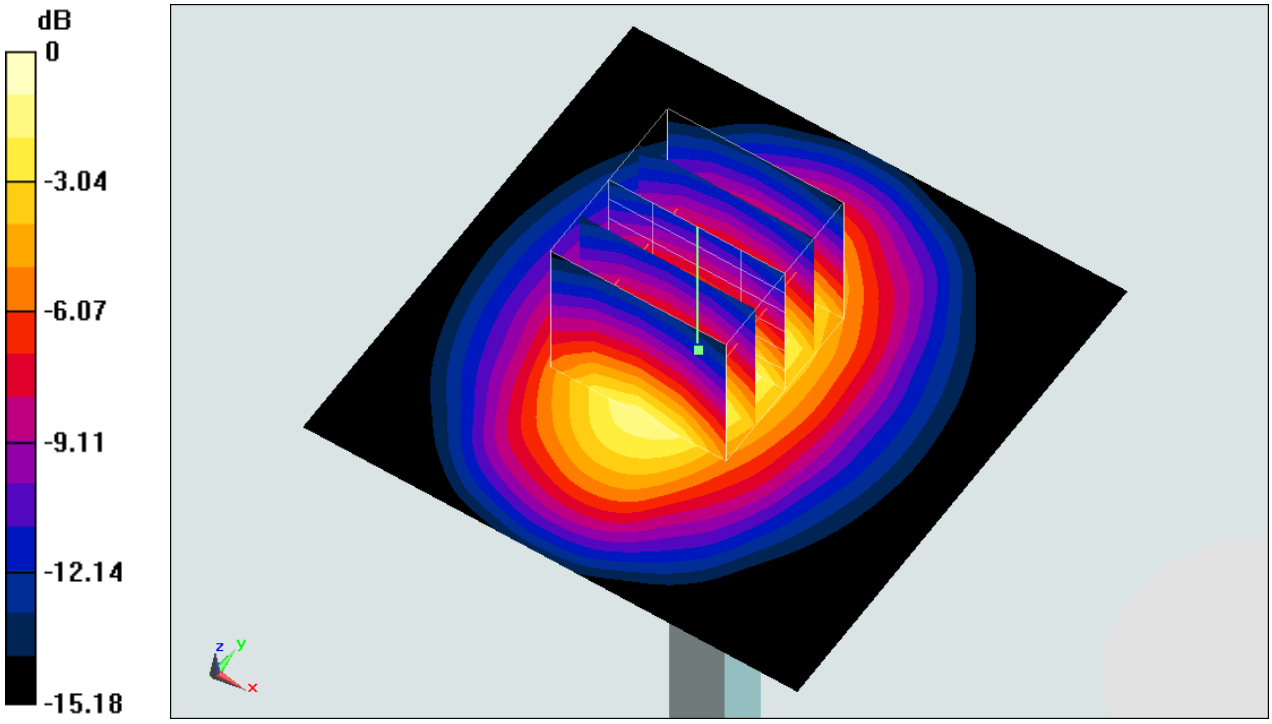

0 dB = 10.2 mW/g = 20.17 dB mW/g

Test Laboratory: Sporton International Inc. SAR/HAC Testing Lab Date: 2015/5/23

System Check_Body_1750MHz_150523

DUT: D1750V2-1137

Communication System: CW; Frequency: 1750 MHz;Duty Cycle: 1:1
Medium: MSL_1750_150523 Medium parameters used: f = 1750 MHz; σ = 1.532 mho/m; ε_r = 54.004; ρ = 1000 kg/m^3
Ambient Temperature：23.6 ℃； Liquid Temperature：22.6 ℃

DASY5 Configuration:
- Probe: ES3DV3 - SN3270; ConvF(4.95, 4.95, 4.95); Calibrated: 2014/9/26;
- Sensor-Surface: 2mm (Mechanical Surface Detection)
- Electronics: DAE4 Sn916; Calibrated: 2014/12/29
- Phantom: SAM_Right; Type: QD000P40CC; Serial: TP:1383
- Measurement SW: DASY52, Version 52.8 (2);SEMCAD X Version 14.6.6 (6477)

Configuration/Pin=250mW/Area Scan (61x61x1): Measurement grid: dx=15mm, dy=15mm
Maximum value of SAR (interpolated) = 12.1 mW/g

Configuration/Pin=250mW/Zoom Scan (5x5x7)/Cube 0: Measurement grid: dx=8mm, dy=8mm, dz=5mm
Reference Value = 83.409 V/m; Power Drift = -0.02 dB
Peak SAR (extrapolated) = 15.823 mW/g
SAR(1 g) = 9.23 mW/g; SAR(10 g) = 4.96 mW/g
Maximum value of SAR (measured) = 11.5 mW/g

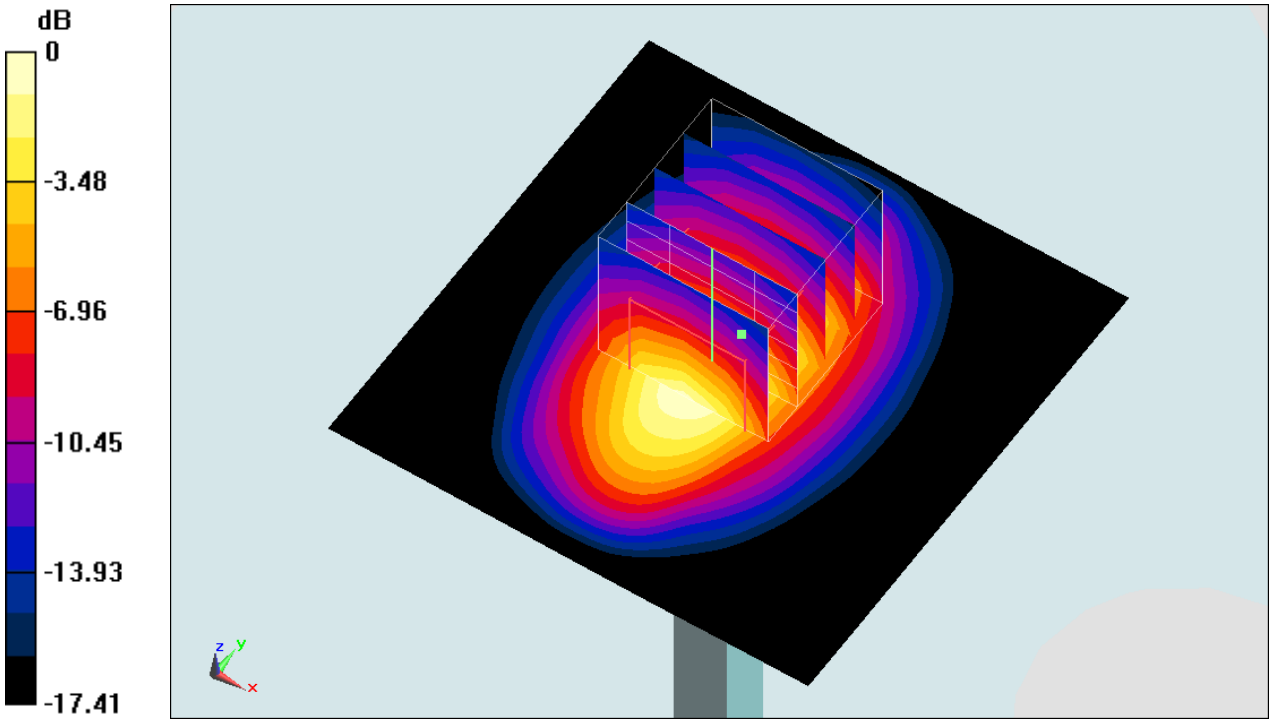

0 dB = 11.5 mW/g = 21.21 dB mW/g

Test Laboratory: Sporton International Inc. SAR/HAC Testing Lab Date: 2015/5/24

System Check_Body_1750MHz_150524

DUT: D1750V2-1137

Communication System: CW; Frequency: 1750 MHz;Duty Cycle: 1:1
Medium: MSL_1750_150524 Medium parameters used: f = 1750 MHz; σ = 1.529 mho/m; ε_r = 52.221; ρ = 1000 kg/m^3
Ambient Temperature：23.5 ℃； Liquid Temperature：22.5 ℃

DASY5 Configuration:
- Probe: ES3DV3 - SN3270; ConvF(4.95, 4.95, 4.95); Calibrated: 2014/9/26;
- Sensor-Surface: 2mm (Mechanical Surface Detection)
- Electronics: DAE4 Sn916; Calibrated: 2014/12/29
- Phantom: SAM_Right; Type: QD000P40CC; Serial: TP:1383
- Measurement SW: DASY52, Version 52.8 (2);SEMCAD X Version 14.6.6 (6477)

Configuration/Pin=250mW/Area Scan (61x61x1): Measurement grid: dx=15mm, dy=15mm
Maximum value of SAR (interpolated) = 10.9 mW/g

Configuration/Pin=250mW/Zoom Scan (5x5x7)/Cube 0: Measurement grid: dx=8mm, dy=8mm, dz=5mm
Reference Value = 81.336 V/m; Power Drift = 0.00 dB
Peak SAR (extrapolated) = 13.670 mW/g
SAR(1 g) = 8.93 mW/g; SAR(10 g) = 5.21 mW/g
Maximum value of SAR (measured) = 10.7 mW/g

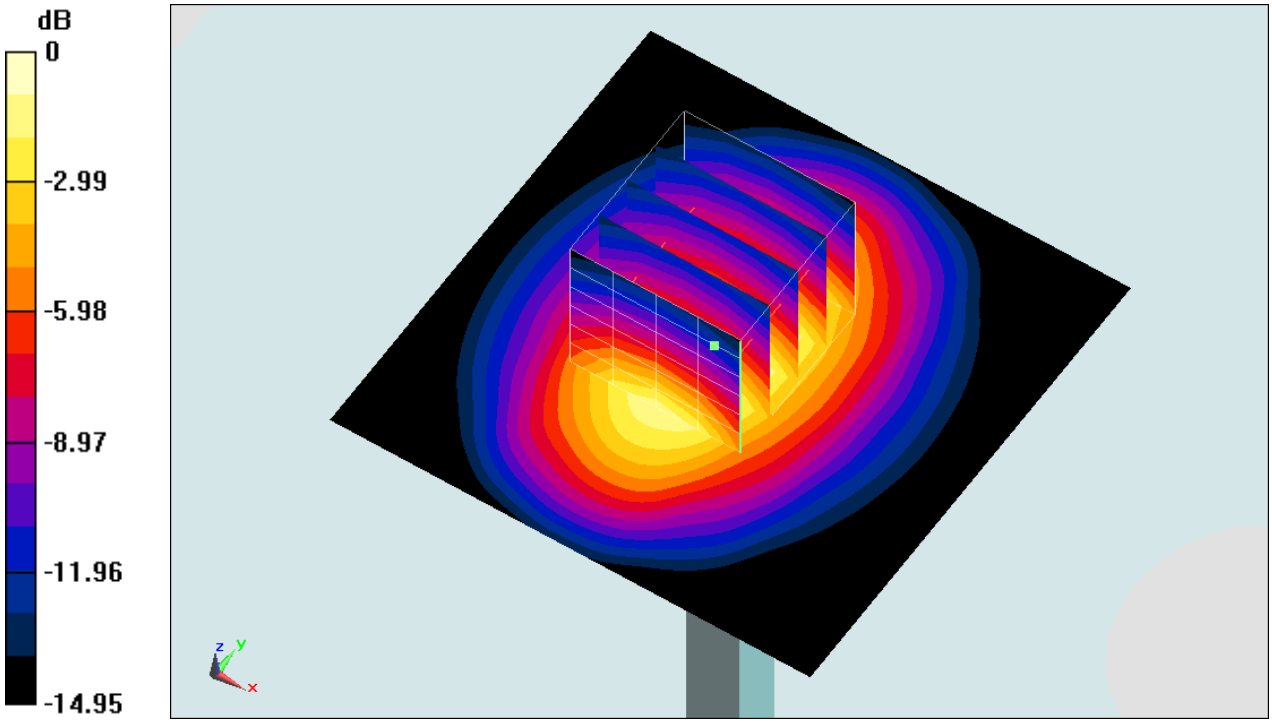

0 dB = 10.7 mW/g = 20.59 dB mW/g

Test Laboratory: Sporton International Inc. SAR/HAC Testing Lab Date: 2015/5/26

System Check_Head_1900MHz_150526

DUT: D1900V2-5d041

Communication System: CW; Frequency: 1900 MHz;Duty Cycle: 1:1
Medium: HSL_1900_150526 Medium parameters used: f = 1900 MHz; σ = 1.438 mho/m; ε_r = 39.776; ρ = 1000 kg/m^3
Ambient Temperature：23.2 ℃； Liquid Temperature：22.2 ℃

DASY5 Configuration:
- Probe: ES3DV3 - SN3270; ConvF(5.05, 5.05, 5.05); Calibrated: 2014/9/26;
- Sensor-Surface: 2mm (Mechanical Surface Detection)
- Electronics: DAE4 Sn916; Calibrated: 2014/12/29
- Phantom: SAM_Right; Type: QD000P40CC; Serial: TP:1383
- Measurement SW: DASY52, Version 52.8 (2);SEMCAD X Version 14.6.6 (6477)

Configuration/Pin=250mW/Area Scan (61x61x1): Measurement grid: dx=15mm, dy=15mm
Maximum value of SAR (interpolated) = 15.6 mW/g

Configuration/Pin=250mW/Zoom Scan (5x5x7)/Cube 0: Measurement grid: dx=8mm, dy=8mm, dz=5mm
Reference Value = 111.8 V/m; Power Drift = 0.04 dB
Peak SAR (extrapolated) = 20.346 mW/g
SAR(1 g) = 10.7 mW/g; SAR(10 g) = 5.52 mW/g
Maximum value of SAR (measured) = 15.4 mW/g

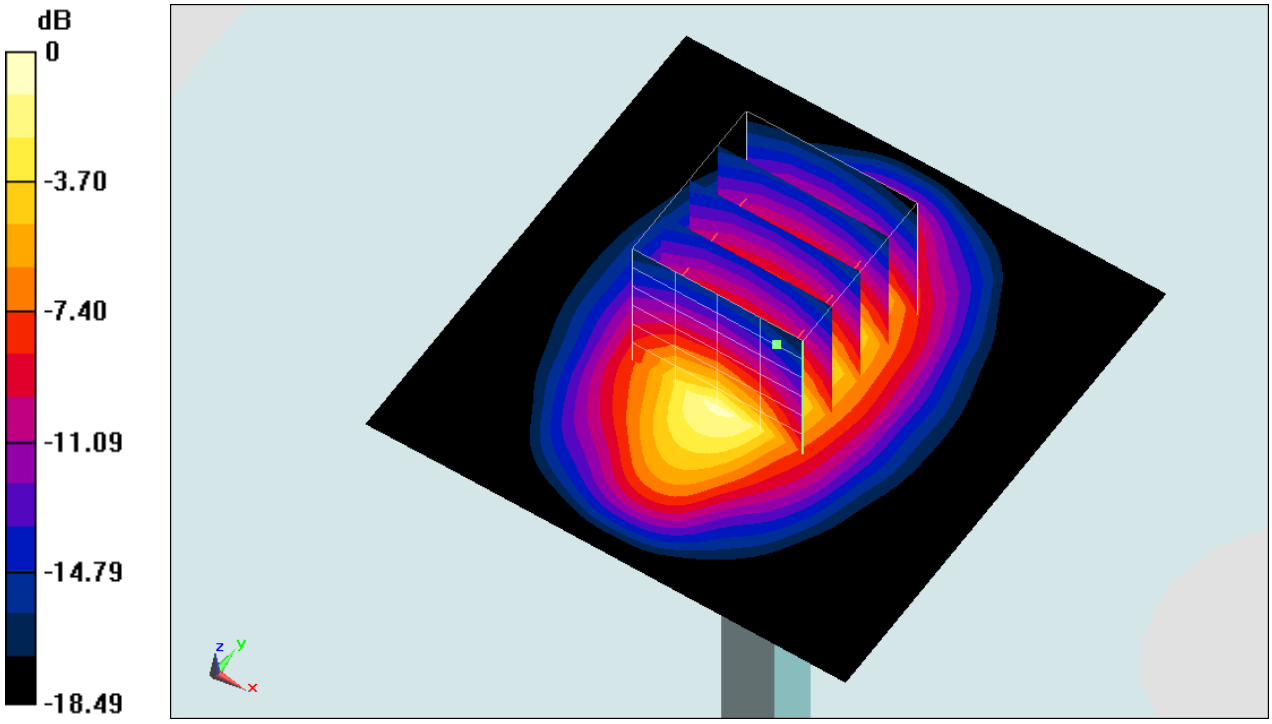

0 dB = 15.4 mW/g = 23.75 dB mW/g

Test Laboratory: Sporton International Inc. SAR/HAC Testing Lab Date: 2015/5/23

System Check_Body_1900MHz_150523

DUT: D1900V2-5d041

Communication System: CW; Frequency: 1900 MHz;Duty Cycle: 1:1
Medium: MSL_1900_150523 Medium parameters used: f = 1900 MHz; σ = 1.56 mho/m; ε_r = 54.78; ρ = 1000 kg/m^3
Ambient Temperature：23.5 ℃； Liquid Temperature：22.5 ℃

DASY5 Configuration:
- Probe: EX3DV4 - SN3955; ConvF(7.89, 7.89, 7.89); Calibrated: 2014/11/21;
- Sensor-Surface: 1.4mm (Mechanical Surface Detection)
- Electronics: DAE4 Sn1399; Calibrated: 2014/11/13
- Phantom: SAM_Right; Type: QD000P40CC; Serial: TP:1383
- Measurement SW: DASY52, Version 52.8 (2);SEMCAD X Version 14.6.6 (6477)

Configuration/Pin=250mW/Area Scan (61x61x1): Measurement grid: dx=15mm, dy=15mm
Maximum value of SAR (interpolated) = 14.2 mW/g

Configuration/Pin=250mW/Zoom Scan (5x5x7)/Cube 0: Measurement grid: dx=8mm, dy=8mm, dz=5mm
Reference Value = 97.791 V/m; Power Drift = 0.01 dB
Peak SAR (extrapolated) = 17.384 mW/g
SAR(1 g) = 10.1 mW/g; SAR(10 g) = 5.4 mW/g
Maximum value of SAR (measured) = 14.2 mW/g

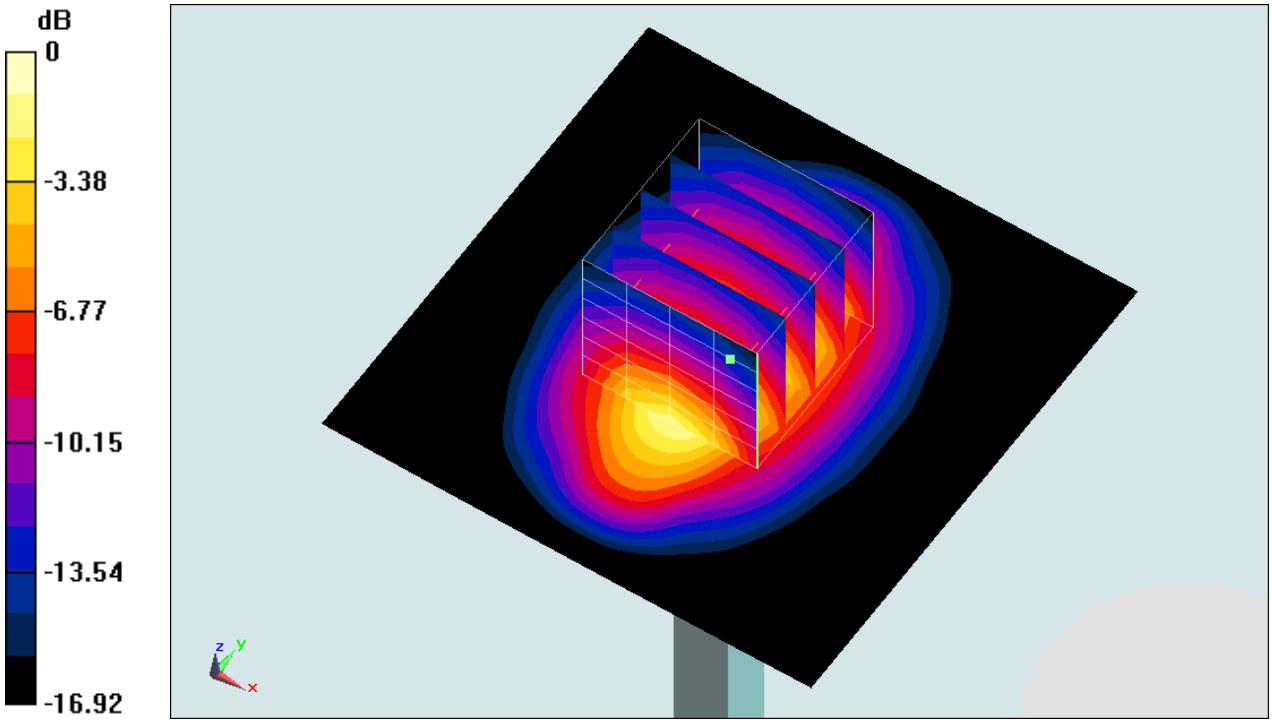

0 dB = 14.2 mW/g = 23.05 dB mW/g

Test Laboratory: Sporton International Inc. SAR/HAC Testing Lab Date: 2015/5/23

System Check_Body_1900MHz_150523

DUT: D1900V2-5d041

Communication System: CW; Frequency: 1900 MHz;Duty Cycle: 1:1
Medium: MSL_1900_150523 Medium parameters used: f = 1900 MHz; σ = 1.56 mho/m; ε_r = 54.78; ρ = 1000 kg/m^3
Ambient Temperature：23.5 ℃； Liquid Temperature：22.5 ℃

DASY5 Configuration:
- Probe: ES3DV3 - SN3270; ConvF(4.7, 4.7, 4.7); Calibrated: 2014/9/26;
- Sensor-Surface: 2mm (Mechanical Surface Detection)
- Electronics: DAE4 Sn916; Calibrated: 2014/12/29
- Phantom: SAM_Right; Type: QD000P40CC; Serial: TP:1383
- Measurement SW: DASY52, Version 52.8 (2);SEMCAD X Version 14.6.6 (6477)

Configuration/Pin=250mW/Area Scan (61x61x1): Measurement grid: dx=15mm, dy=15mm
Maximum value of SAR (interpolated) = 14.7 mW/g

Configuration/Pin=250mW/Zoom Scan (5x5x7)/Cube 0: Measurement grid: dx=8mm, dy=8mm, dz=5mm
Reference Value = 98.520 V/m; Power Drift = -0.02 dB
Peak SAR (extrapolated) = 19.291 mW/g
SAR(1 g) = 10.5 mW/g; SAR(10 g) = 5.47 mW/g
Maximum value of SAR (measured) = 15.0 mW/g

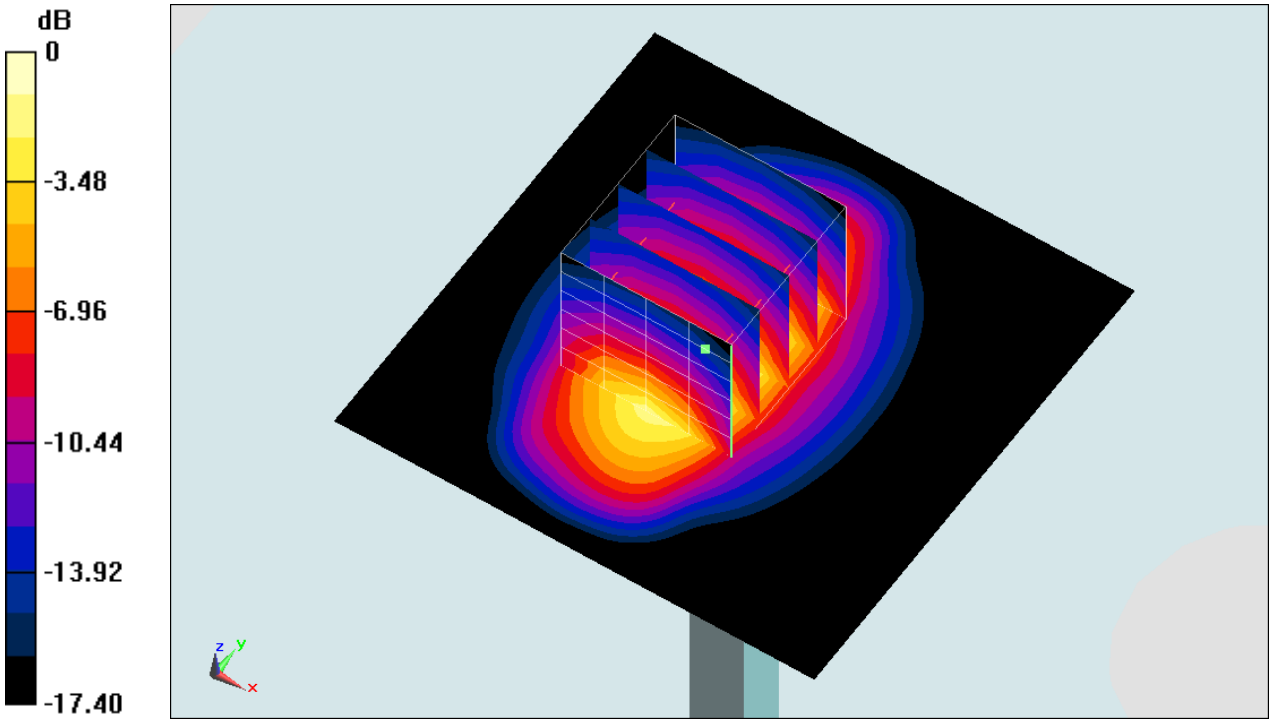

0 dB = 15.0 mW/g = 23.52 dB mW/g

Test Laboratory: Sporton International Inc. SAR/HAC Testing Lab Date: 2015/5/26

System Check_Head_2450MHz_150526

DUT: D2450V2-924

Communication System: CW; Frequency: 2450 MHz;Duty Cycle: 1:1
Medium: HSL_2450_150526 Medium parameters used: f = 2450 MHz; σ = 1.848 mho/m; ε_r = 38.077; ρ = 1000 kg/m^3
Ambient Temperature：23.4 ℃； Liquid Temperature：22.4 ℃

DASY5 Configuration:
- Probe: ES3DV3 - SN3270; ConvF(4.52, 4.52, 4.52); Calibrated: 2014/9/26;
- Sensor-Surface: 2mm (Mechanical Surface Detection)
- Electronics: DAE4 Sn916; Calibrated: 2014/12/29
- Phantom: SAM_Left; Type: QD000P40CD; Serial: TP:1542
- Measurement SW: DASY52, Version 52.8 (2);SEMCAD X Version 14.6.6 (6477)

Configuration/Pin=250mW/Area Scan (61x61x1): Measurement grid: dx=12mm, dy=12mm
Maximum value of SAR (interpolated) = 19.8 mW/g

Configuration/Pin=250mW/Zoom Scan (7x7x7)/Cube 0: Measurement grid: dx=5mm, dy=5mm, dz=5mm
Reference Value = 100.6 V/m; Power Drift = 0.00 dB
Peak SAR (extrapolated) = 28.197 mW/g
SAR(1 g) = 13.9 mW/g; SAR(10 g) = 6.55 mW/g
Maximum value of SAR (measured) = 18.1 mW/g

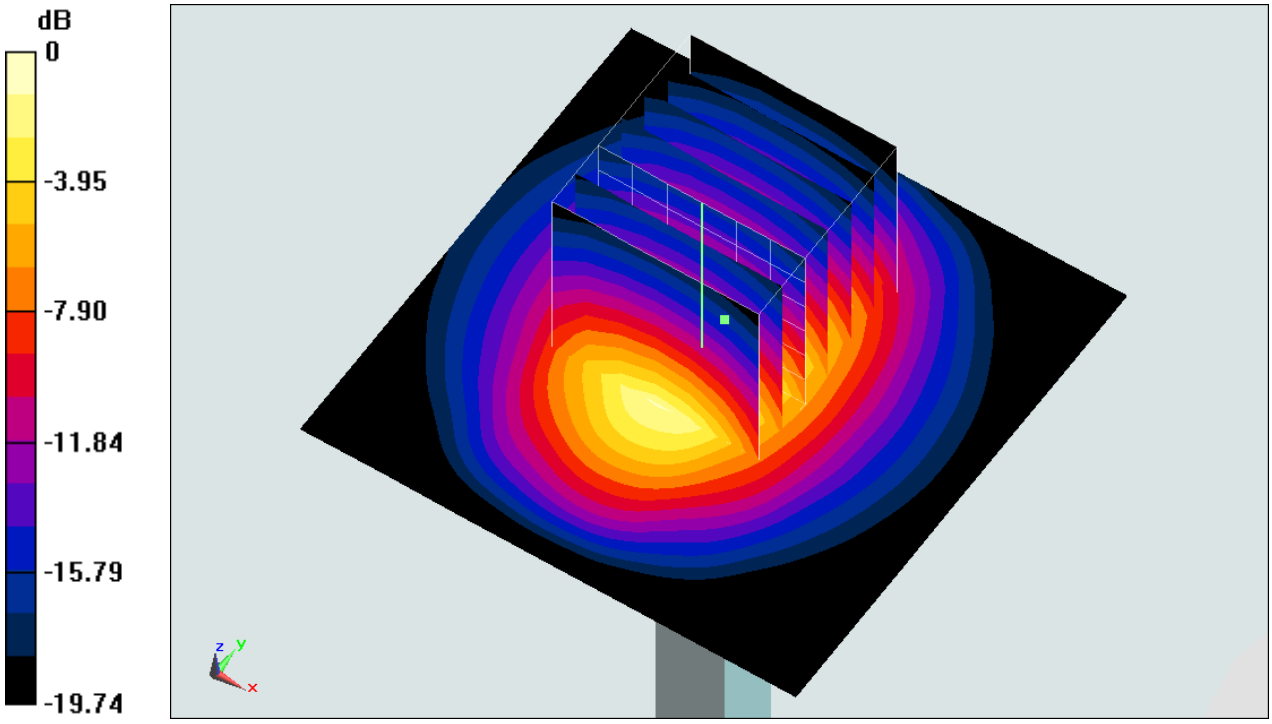

0 dB = 18.1 mW/g = 25.15 dB mW/g

Test Laboratory: Sporton International Inc. SAR/HAC Testing Lab Date: 2015/5/29

System Check_Head_2450MHz_150529

DUT: D2450V2-924

Communication System: CW; Frequency: 2450 MHz;Duty Cycle: 1:1
Medium: HSL_2450_150529 Medium parameters used: f = 2450 MHz; σ = 1.852 mho/m; ε_r = 38.477; ρ = 1000 kg/m^3
Ambient Temperature：23.5 ℃； Liquid Temperature：22.5 ℃

DASY5 Configuration:
- Probe: EX3DV4 - SN3578; ConvF(7.11, 7.11, 7.11); Calibrated: 2015/3/31;
- Sensor-Surface: 1.4mm (Mechanical Surface Detection)
- Electronics: DAE4 Sn916; Calibrated: 2014/12/29
- Phantom: SAM_Left; Type: QD000P40CD; Serial: TP:1542
- Measurement SW: DASY52, Version 52.8 (2);SEMCAD X Version 14.6.6 (6477)

Configuration/Pin=250mW/Area Scan (81x81x1): Measurement grid: dx=12mm, dy=12mm
Maximum value of SAR (interpolated) = 18.6 mW/g

Configuration/Pin=250mW/Zoom Scan (7x7x7)/Cube 0: Measurement grid: dx=5mm, dy=5mm, dz=5mm
Reference Value = 104.5 V/m; Power Drift = 0.13 dB
Peak SAR (extrapolated) = 25.140 mW/g
SAR(1 g) = 12.3 mW/g; SAR(10 g) = 5.74 mW/g
Maximum value of SAR (measured) = 20.5 mW/g

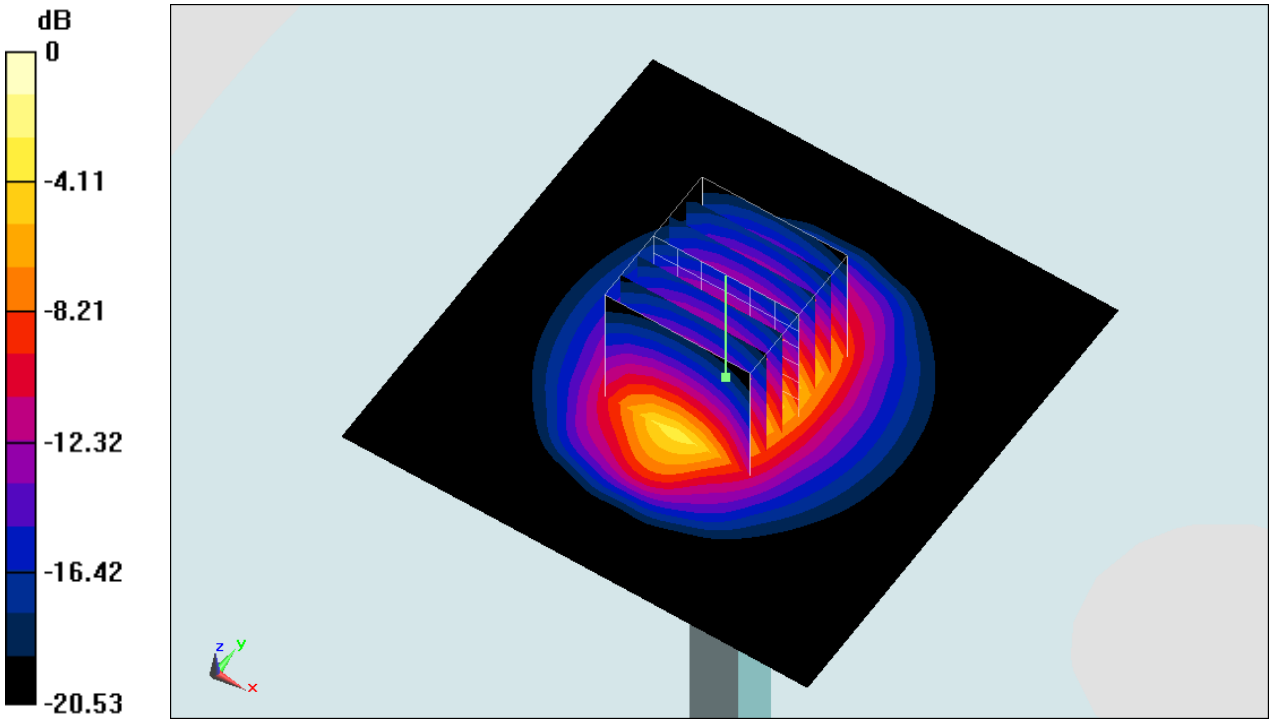

0 dB = 20.5 mW/g = 26.24 dB mW/g

Test Laboratory: Sporton International Inc. SAR/HAC Testing Lab Date: 2015/5/27

System Check_Body_2450MHz_150527

DUT: D2450V2-924

Communication System: CW; Frequency: 2450 MHz;Duty Cycle: 1:1
Medium: MSL_2450_150527 Medium parameters used: f = 2450 MHz; σ = 2.01 mho/m; ε_r = 53.412; ρ = 1000 kg/m^3
Ambient Temperature：23.4 ℃； Liquid Temperature：22.4 ℃

DASY5 Configuration:
- Probe: ES3DV3 - SN3270; ConvF(4.29, 4.29, 4.29); Calibrated: 2014/9/26;
- Sensor-Surface: 2mm (Mechanical Surface Detection)
- Electronics: DAE4 Sn916; Calibrated: 2014/12/29
- Phantom: SAM_Right; Type: QD000P40CC; Serial: TP:1383
- Measurement SW: DASY52, Version 52.8 (2);SEMCAD X Version 14.6.6 (6477)

Configuration/Pin=250mW/Area Scan (71x71x1): Measurement grid: dx=12mm, dy=12mm
Maximum value of SAR (interpolated) = 17.0 mW/g

Configuration/Pin=250mW/Zoom Scan (7x7x7)/Cube 0: Measurement grid: dx=5mm, dy=5mm, dz=5mm
Reference Value = 92.248 V/m; Power Drift = -0.05 dB
Peak SAR (extrapolated) = 26.717 mW/g
SAR(1 g) = 12.4 mW/g; SAR(10 g) = 5.75 mW/g
Maximum value of SAR (measured) = 18.6 mW/g

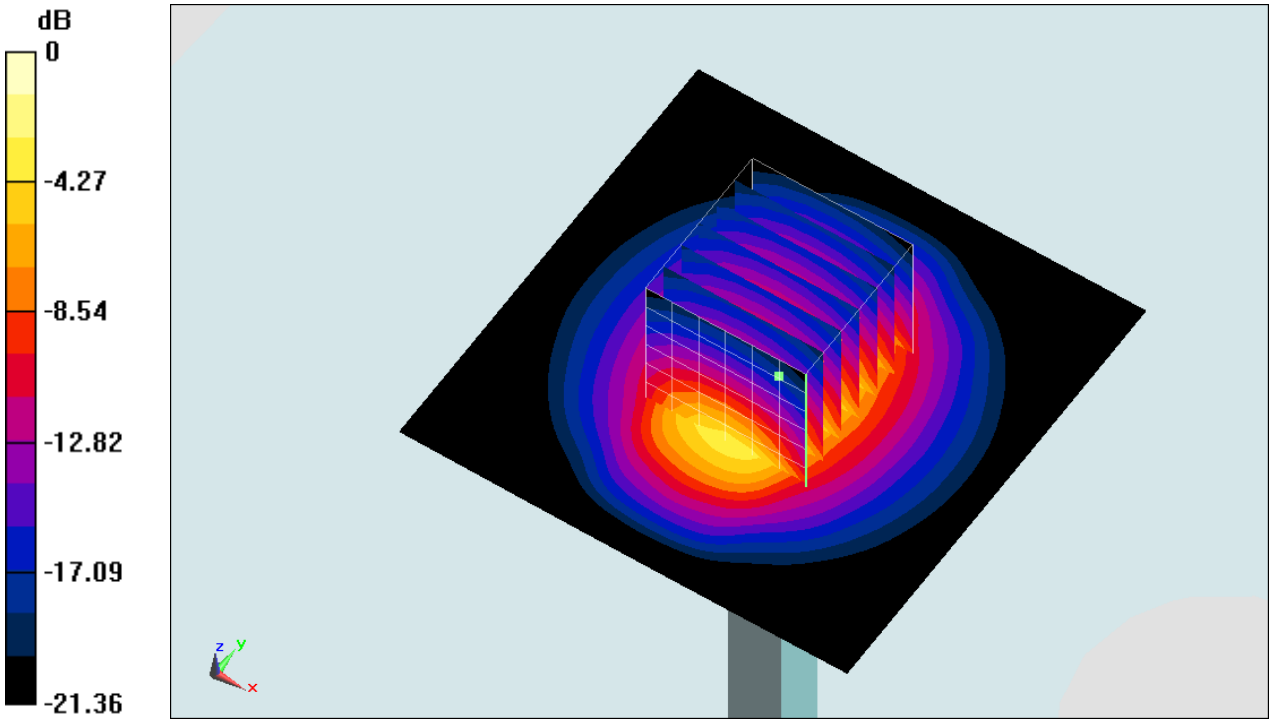

0 dB = 18.6 mW/g = 25.39 dB mW/g

Test Laboratory: Sporton International Inc. SAR/HAC Testing Lab Date: 2015/5/21

System Check_Head_2600MHz_150521

DUT: D2600V2-1070

Communication System: CW ; Frequency: 2600 MHz;Duty Cycle: 1:1
Medium: HSL_2600_150521 Medium parameters used: f = 2600 MHz; σ = 2.027 mho/m; ε_r = 38.418; ρ = 1000 kg/m^3
Ambient Temperature：23.4 ℃； Liquid Temperature：22.4 ℃

DASY5 Configuration:
- Probe: EX3DV4 - SN3955; ConvF(7.21, 7.21, 7.21); Calibrated: 2014/11/21;
- Sensor-Surface: 1.4mm (Mechanical Surface Detection)
- Electronics: DAE4 Sn1399; Calibrated: 2014/11/13
- Phantom: SAM_Right; Type: QD000P40CC; Serial: TP:1383
- Measurement SW: DASY52, Version 52.8 (2);SEMCAD X Version 14.6.6 (6477)

Configuration/Pin=250mW/Area Scan (61x61x1): Measurement grid: dx=12mm, dy=12mm
Maximum value of SAR (interpolated) = 25.4 mW/g

Configuration/Pin=250mW/Zoom Scan (7x7x7)/Cube 0: Measurement grid: dx=5mm, dy=5mm, dz=5mm
Reference Value = 116.3 V/m; Power Drift = -0.02 dB
Peak SAR (extrapolated) = 32.169 mW/g
SAR(1 g) = 14.4 mW/g; SAR(10 g) = 6.29 mW/g
Maximum value of SAR (measured) = 25.1 mW/g

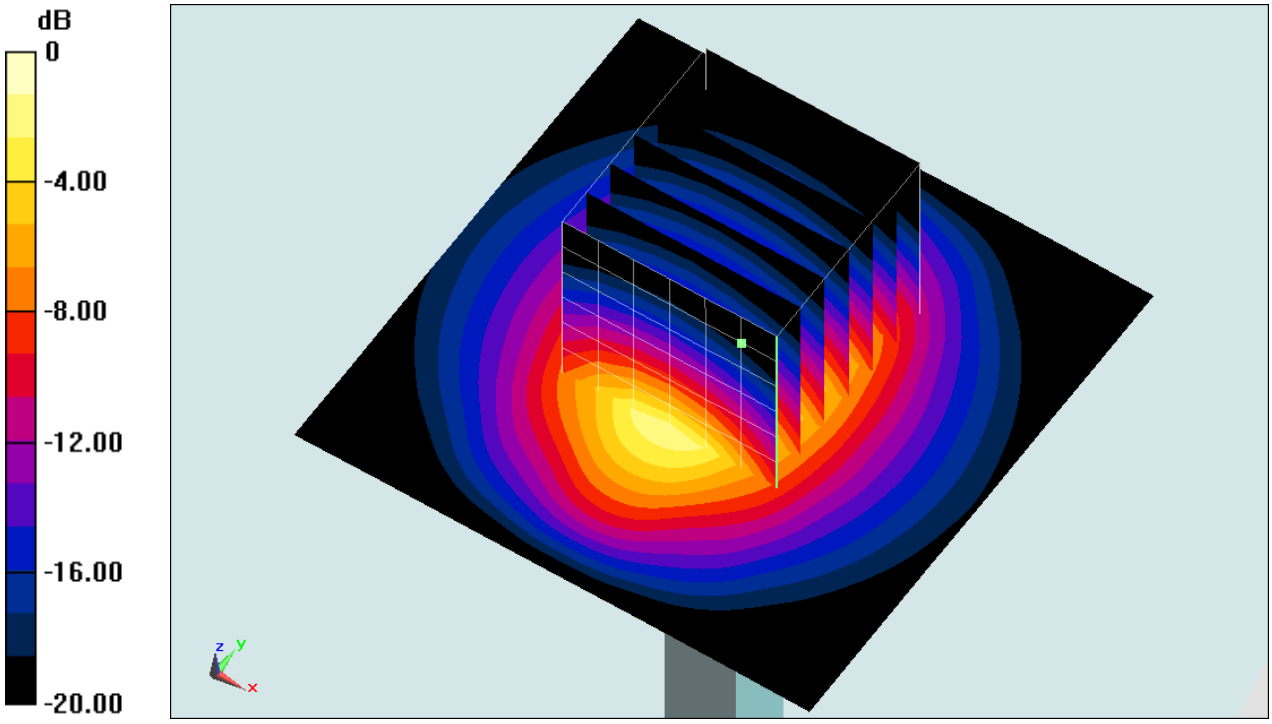

0 dB = 25.1 mW/g = 27.99 dB mW/g

Test Laboratory: Sporton International Inc. SAR/HAC Testing Lab Date: 2015/5/20

System Check_Body_2600MHz_150520

DUT: D2600V2-1070

Communication System: CW; Frequency: 2600 MHz;Duty Cycle: 1:1
Medium: MSL_2600_150520 Medium parameters used: f = 2600 MHz; σ = 2.218 mho/m; ε_r = 52.818; ρ = 1000 kg/m^3
Ambient Temperature：23.3 ℃； Liquid Temperature：22.3 ℃

DASY5 Configuration:
- Probe: EX3DV4 - SN3955; ConvF(7.09, 7.09, 7.09); Calibrated: 2014/11/21;
- Sensor-Surface: 1.4mm (Mechanical Surface Detection)
- Electronics: DAE4 Sn1399; Calibrated: 2014/11/13
- Phantom: SAM_Left; Type: QD000P40CD; Serial: TP:1542
- Measurement SW: DASY52, Version 52.8 (2);SEMCAD X Version 14.6.6 (6477)

Configuration/Pin=250mW/Area Scan (71x71x1): Measurement grid: dx=12mm, dy=12mm
Maximum value of SAR (interpolated) = 23.8 mW/g

Configuration/Pin=250mW/Zoom Scan (7x7x7)/Cube 0: Measurement grid: dx=5mm, dy=5mm, dz=5mm
Reference Value = 107.2 V/m; Power Drift = 0.02 dB
Peak SAR (extrapolated) = 29.635 mW/g
SAR(1 g) = 13.7 mW/g; SAR(10 g) = 6.06 mW/g
Maximum value of SAR (measured) = 23.6 mW/g

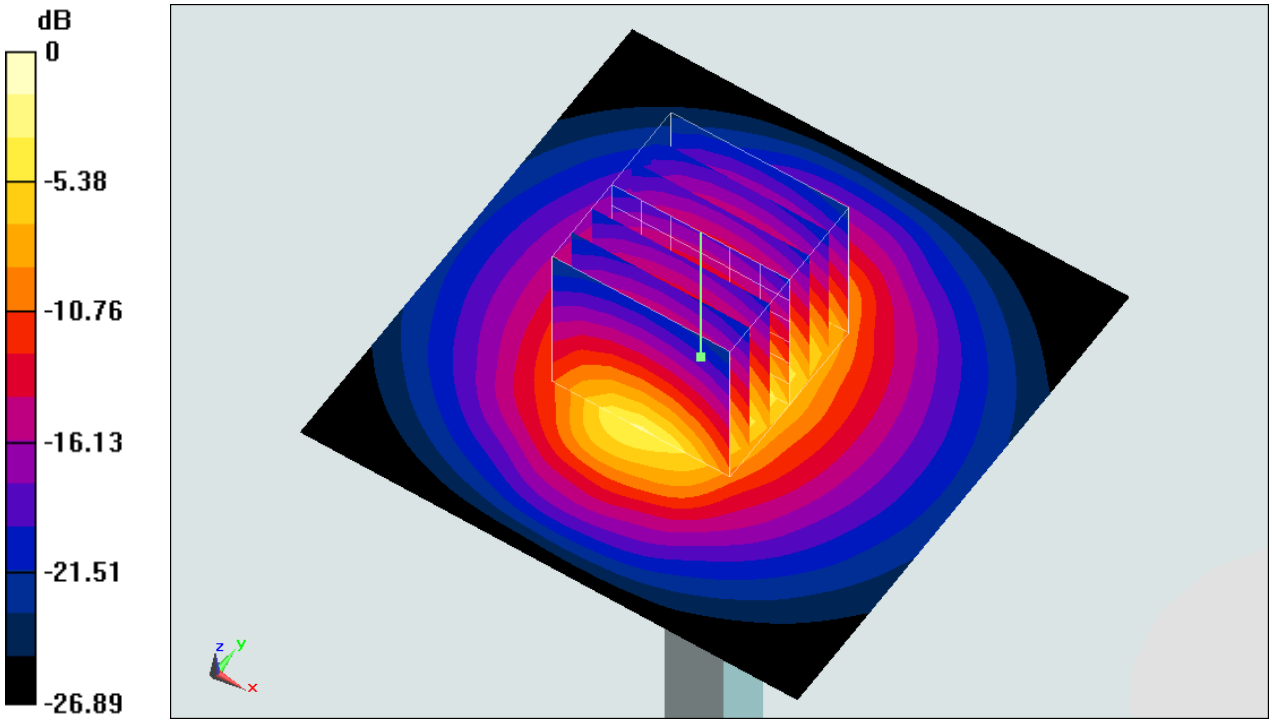

0 dB = 23.6 mW/g = 27.46 dB mW/g

System Check_Body_5200MHz_150527

DUT: D5GHzV2-1006

Communication System: CW ; Frequency: 5200 MHz;Duty Cycle: 1:1
Medium: MSL_5G_150527 Medium parameters used: f = 5200 MHz; σ = 5.316 S/m; ε_r = 48.235; ρ = 1000 kg/m^3
Ambient Temperature：23.3 ℃； Liquid Temperature：22.3 ℃

DASY5 Configuration
- Probe: EX3DV4 - SN3954; ConvF(4.32, 4.32, 4.32); Calibrated: 2014/11/21;
- Sensor-Surface: 1.4mm (Mechanical Surface Detection)
- Electronics: DAE4 Sn1279; Calibrated: 2014/7/23
- Phantom: SAM_Left; Type: QD000P40CD; Serial: S/N:1796
- Measurement SW: DASY52, Version 52.8 (8); SEMCAD X Version 14.6.10 (7331)

Configuration/Pin=100mW/Area Scan (71x71x1): Interpolated grid: dx=1.000 mm, dy=1.000 mm
Maximum value of SAR (interpolated) = 18.5 W/kg

Configuration/Pin=100mW/Zoom Scan (7x7x7)/Cube 0: Measurement grid: dx=4mm, dy=4mm, dz=1.4mm
Reference Value = 65.67 V/m; Power Drift = 0.18 dB
Peak SAR (extrapolated) = 33.0 W/kg
SAR(1 g) = 7.76 W/kg; SAR(10 g) = 2.11 W/kg
Maximum value of SAR (measured) = 19.3 W/kg

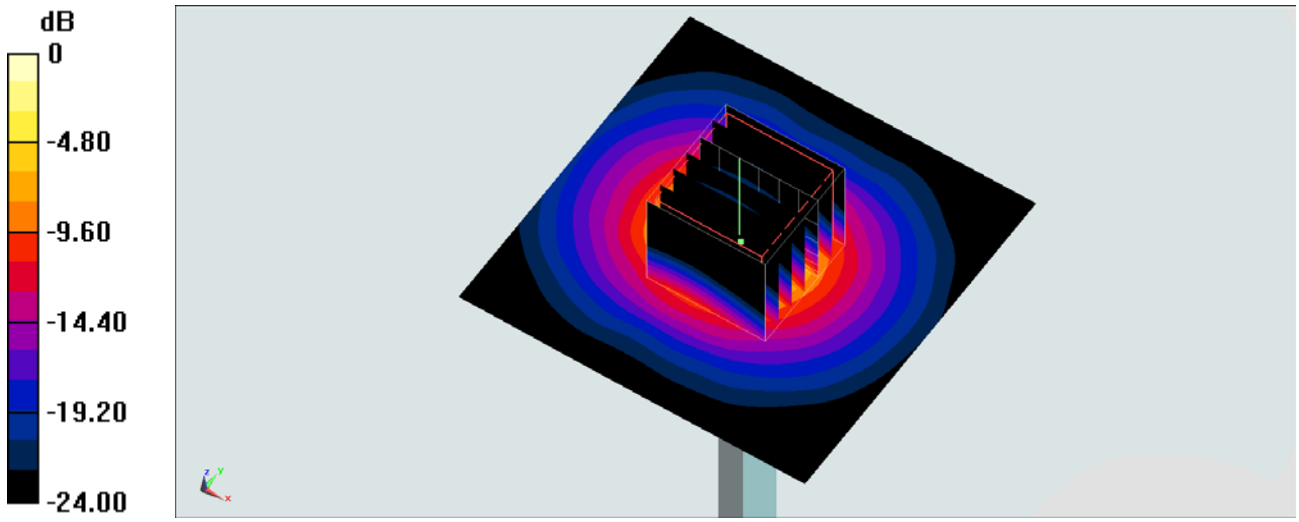

0 dB = 19.3 W/kg = 12.86 dBW/kg

Test Laboratory: Sporton International Inc. SAR/HAC Testing Lab Date: 2015/5/28

System Check_Head_5300MHz_150528

DUT: D5GHzV2-1006

Communication System: CW; Frequency: 5300 MHz;Duty Cycle: 1:1
Medium: HSL_5G_150528 Medium parameters used: f = 5300 MHz; σ = 4.603 mho/m; ε_r = 36.733; ρ = 1000 kg/m^3
Ambient Temperature：23.4 ℃； Liquid Temperature：22.4 ℃

DASY5 Configuration:
- Probe: EX3DV4 - SN3578; ConvF(5.3, 5.3, 5.3); Calibrated: 2015/3/31;
- Sensor-Surface: 1.4mm (Mechanical Surface Detection)
- Electronics: DAE4 Sn916; Calibrated: 2014/12/29
- Phantom: SAM_Right; Type: QD000P40CC; Serial: TP:1383
- Measurement SW: DASY52, Version 52.8 (2);SEMCAD X Version 14.6.6 (6477)

Configuration/Pin=100mW/Area Scan (71x71x1): Measurement grid: dx=10mm, dy=10mm
Maximum value of SAR (interpolated) = 20.9 mW/g

Configuration/Pin=100mW/Zoom Scan (7x7x7)/Cube 0: Measurement grid: dx=4mm, dy=4mm, dz=1.4mm
Reference Value = 74.044 V/m; Power Drift = -0.10 dB
Peak SAR (extrapolated) = 34.328 mW/g
SAR(1 g) = 8.47 mW/g; SAR(10 g) = 2.32 mW/g
Maximum value of SAR (measured) = 21.0 mW/g

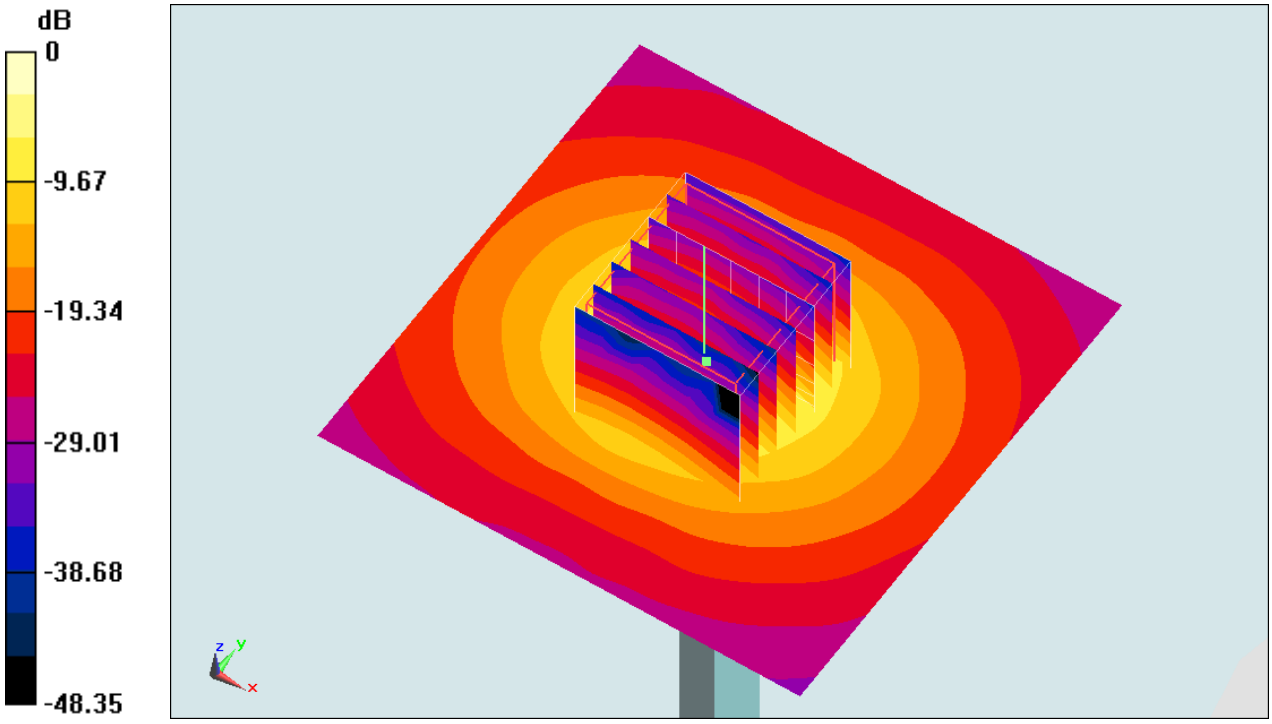

0 dB = 21.0 mW/g = 26.44 dB mW/g

System Check_Body_5300MHz_150528

DUT: D5GHzV2-1006

Communication System: CW ; Frequency: 5300 MHz;Duty Cycle: 1:1
Medium: MSL_5G_150528 Medium parameters used: f = 5300 MHz; σ = 5.562 S/m; ε_r = 47.039; ρ = 1000 kg/m^3
Ambient Temperature：23.3 ℃； Liquid Temperature：22.3 ℃

DASY5 Configuration
- Probe: EX3DV4 - SN3954; ConvF(4.15, 4.15, 4.15); Calibrated: 2014/11/21;
- Sensor-Surface: 1.4mm (Mechanical Surface Detection)
- Electronics: DAE4 Sn1279; Calibrated: 2014/7/23
- Phantom: SAM_Left; Type: QD000P40CD; Serial: S/N:1796
- Measurement SW: DASY52, Version 52.8 (8); SEMCAD X Version 14.6.10 (7331)

Configuration/Pin=100mW/Area Scan (71x71x1): Interpolated grid: dx=1.000 mm, dy=1.000 mm
Maximum value of SAR (interpolated) = 21.7 W/kg

Configuration/Pin=100mW/Zoom Scan (7x7x7)/Cube 0: Measurement grid: dx=4mm, dy=4mm, dz=1.4mm
Reference Value = 68.63 V/m; Power Drift = -0.14 dB
Peak SAR (extrapolated) = 34.5 W/kg
SAR(1 g) = 8.6 W/kg; SAR(10 g) = 2.4 W/kg
Maximum value of SAR (measured) = 21.3 W/kg

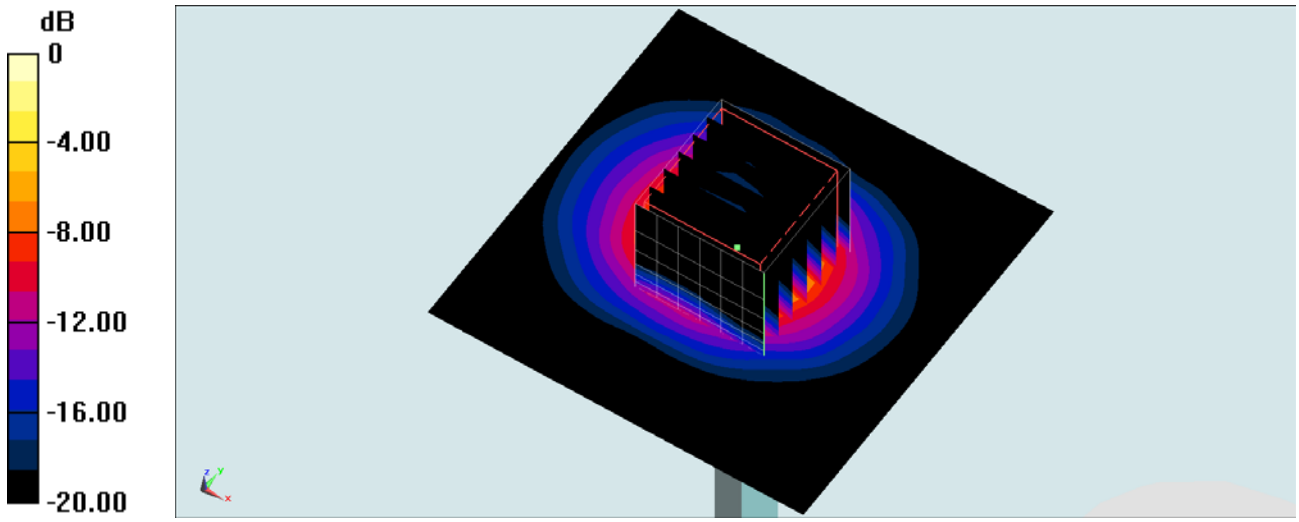

0 dB = 21.3 W/kg = 13.28 dBW/kg

Test Laboratory: Sporton International Inc. SAR/HAC Testing Lab Date: 2015/5/28

System Check_Head_5600MHz_150528

DUT: D5GHzV2-1006

Communication System: CW; Frequency: 5600 MHz;Duty Cycle: 1:1
Medium: HSL_5G_150528 Medium parameters used: f = 5600 MHz; σ = 4.885 mho/m; ε_r = 36.307; ρ = 1000 kg/m^3
Ambient Temperature：23.4 ℃； Liquid Temperature：22.4 ℃

DASY5 Configuration:
- Probe: EX3DV4 - SN3578; ConvF(4.99, 4.99, 4.99); Calibrated: 2015/3/31;
- Sensor-Surface: 1.4mm (Mechanical Surface Detection)
- Electronics: DAE4 Sn916; Calibrated: 2014/12/29
- Phantom: SAM_Right; Type: QD000P40CC; Serial: TP:1383
- Measurement SW: DASY52, Version 52.8 (2);SEMCAD X Version 14.6.6 (6477)

Configuration/Pin=100mW/Area Scan (71x71x1): Measurement grid: dx=10mm, dy=10mm
Maximum value of SAR (interpolated) = 18.1 mW/g

Configuration/Pin=100mW/Zoom Scan (7x7x7)/Cube 0: Measurement grid: dx=4mm, dy=4mm, dz=1.4mm
Reference Value = 50.192 V/m; Power Drift = 0.09 dB
Peak SAR (extrapolated) = 32.701 mW/g
SAR(1 g) = 8.54 mW/g; SAR(10 g) = 2.43 mW/g
Maximum value of SAR (measured) = 20.0 mW/g

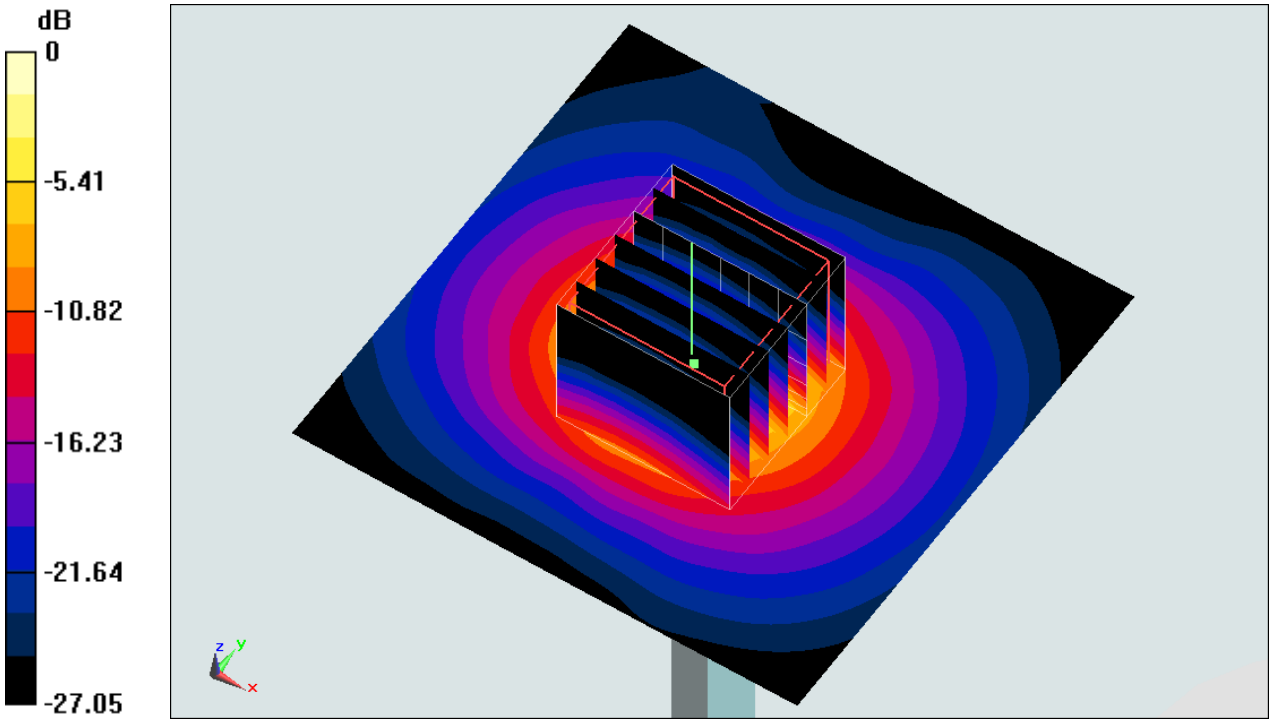

0 dB = 20.0 mW/g = 26.02 dB mW/g

System Check_Body_5600MHz_150528

DUT: D5GHzV2-1006

Communication System: CW ; Frequency: 5600 MHz;Duty Cycle: 1:1
Medium: MSL_5G_150528 Medium parameters used: f = 5600 MHz; σ = 5.946 S/m; ε_r = 46.47; ρ = 1000 kg/m^3
Ambient Temperature：23.3 ℃； Liquid Temperature：22.3 ℃

DASY5 Configuration
- Probe: EX3DV4 - SN3954; ConvF(3.74, 3.74, 3.74); Calibrated: 2014/11/21;
- Sensor-Surface: 1.4mm (Mechanical Surface Detection)
- Electronics: DAE4 Sn1279; Calibrated: 2014/7/23
- Phantom: SAM_Left; Type: QD000P40CD; Serial: S/N:1796
- Measurement SW: DASY52, Version 52.8 (8); SEMCAD X Version 14.6.10 (7331)

Configuration/Pin=100mW/Area Scan (71x71x1): Interpolated grid: dx=1.000 mm, dy=1.000 mm
Maximum value of SAR (interpolated) = 20.6 W/kg

Configuration/Pin=100mW/Zoom Scan (7x7x7)/Cube 0: Measurement grid: dx=4mm, dy=4mm, dz=1.4mm
Reference Value = 65.50 V/m; Power Drift = 0.02 dB
Peak SAR (extrapolated) = 36.6 W/kg
SAR(1 g) = 8.21 W/kg; SAR(10 g) = 2.22 W/kg
Maximum value of SAR (measured) = 21.7 W/kg

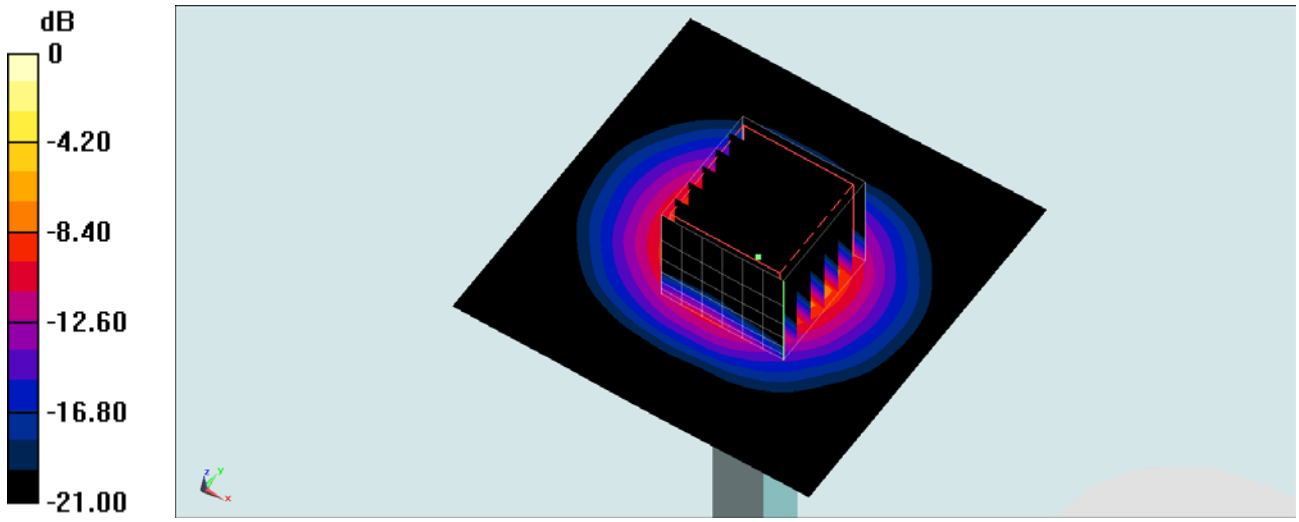

0 dB = 21.7 W/kg = 13.36 dBW/kg

Test Laboratory: Sporton International Inc. SAR/HAC Testing Lab Date: 2015/5/28

System Check_Head_5800MHz_150528

DUT: D5GHzV2-1006

Communication System: CW; Frequency: 5800 MHz;Duty Cycle: 1:1
Medium: HSL_5G_150528 Medium parameters used: f = 5800 MHz; σ = 5.096 mho/m; ε_r = 36.116; ρ = 1000 kg/m^3
Ambient Temperature：23.4 ℃； Liquid Temperature：22.4 ℃

DASY5 Configuration:
- Probe: EX3DV4 - SN3578; ConvF(4.88, 4.88, 4.88); Calibrated: 2015/3/31;
- Sensor-Surface: 1.4mm (Mechanical Surface Detection)
- Electronics: DAE4 Sn916; Calibrated: 2014/12/29
- Phantom: SAM_Right; Type: QD000P40CC; Serial: TP:1383
- Measurement SW: DASY52, Version 52.8 (2);SEMCAD X Version 14.6.6 (6477)

Configuration/Pin=100mW/Area Scan (71x71x1): Measurement grid: dx=10mm, dy=10mm
Maximum value of SAR (interpolated) = 20.3 mW/g

Configuration/Pin=100mW/Zoom Scan (7x7x7)/Cube 0: Measurement grid: dx=4mm, dy=4mm, dz=1.4mm
Reference Value = 52.572 V/m; Power Drift = -0.18 dB
Peak SAR (extrapolated) = 29.302 mW/g
SAR(1 g) = 7.69 mW/g; SAR(10 g) = 2.19 mW/g
Maximum value of SAR (measured) = 18.2 mW/g

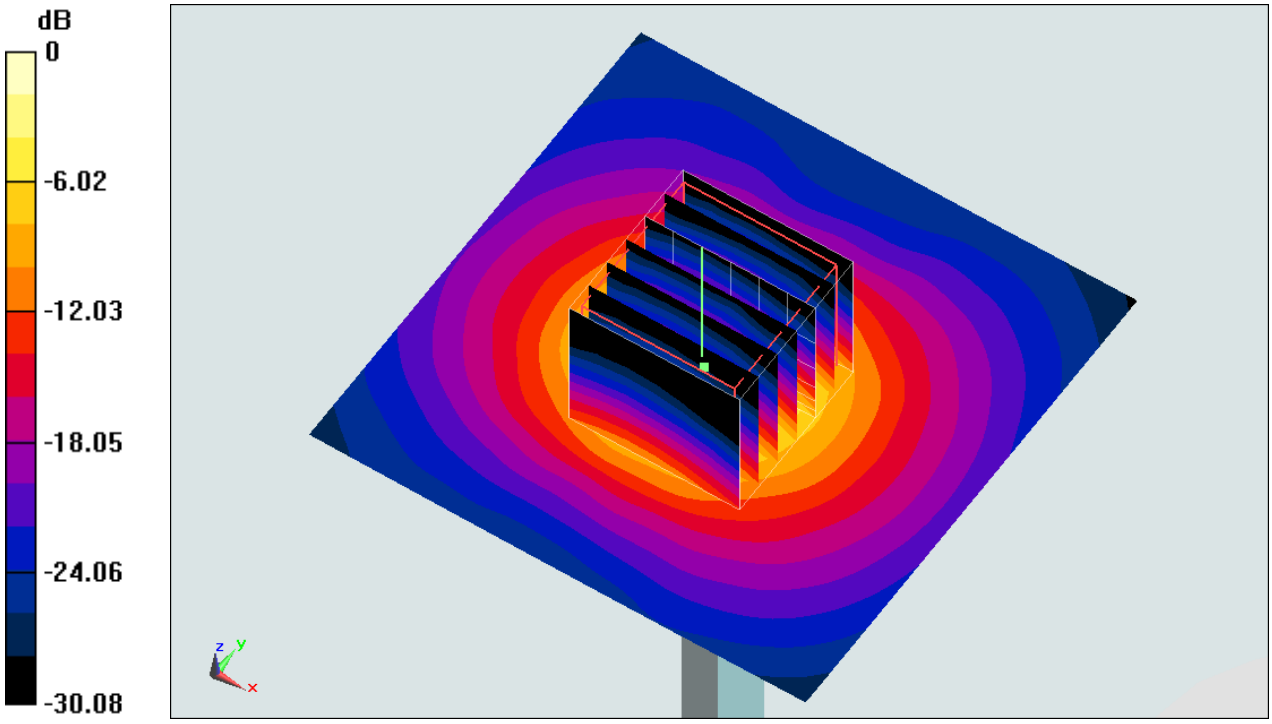

0 dB = 18.2 mW/g = 25.20 dB mW/g

System Check_Body_5800MHz_150529

DUT: D5GHzV2-1006

Communication System: CW; Frequency: 5800 MHz;Duty Cycle: 1:1
Medium: MSL_5G_150529 Medium parameters used: f = 5800 MHz; σ = 6.183 S/m; ε_r = 46.204; ρ = 1000 kg/m^3
Ambient Temperature：23.3 ℃； Liquid Temperature：22.3 ℃

DASY5 Configuration
- Probe: EX3DV4 - SN3954; ConvF(3.96, 3.96, 3.96); Calibrated: 2014/11/21;
- Sensor-Surface: 1.4mm (Mechanical Surface Detection)
- Electronics: DAE4 Sn1279; Calibrated: 2014/7/23
- Phantom: SAM_Left; Type: QD000P40CD; Serial: S/N:1796
- Measurement SW: DASY52, Version 52.8 (8); SEMCAD X Version 14.6.10 (7331)

Configuration/Pin=100mW/Area Scan (71x71x1): Interpolated grid: dx=1.000 mm, dy=1.000 mm
Maximum value of SAR (interpolated) = 19.7 W/kg

Configuration/Pin=100mW/Zoom Scan (7x7x7)/Cube 0: Measurement grid: dx=4mm, dy=4mm, dz=1.4mm
Reference Value = 61.61 V/m; Power Drift = 0.17 dB
Peak SAR (extrapolated) = 36.4 W/kg
SAR(1 g) = 7.89 W/kg; SAR(10 g) = 2.15 W/kg
Maximum value of SAR (measured) = 20.6 W/kg

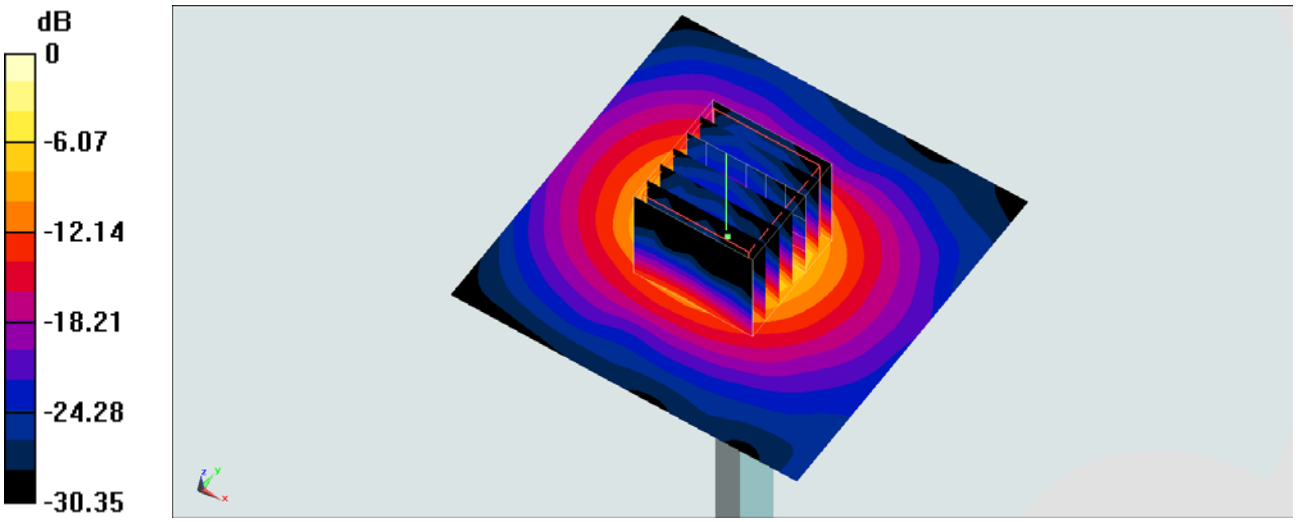

0 dB = 20.6 W/kg = 13.14 dBW/kg