System Check_Head_835MHz_151121

DUT: D835V2-499

Communication System: CW; Frequency: 835 MHz;Duty Cycle: 1:1
Medium: HSL_850_151121 Medium parameters used: f = 835 MHz; σ = 0.905 S/m; ε_r = 41.096; ρ = 1000 kg/m^3
Ambient Temperature：23.6 ℃; Liquid Temperature：22.6 ℃

DASY5 Configuration:
- Probe: EX3DV4 - SN3931; ConvF(10.04, 10.04, 10.04); Calibrated: 2015/10/1;
- Sensor-Surface: 1.4mm (Mechanical Surface Detection)
- Electronics: DAE3 Sn577; Calibrated: 2015/9/24
- Phantom: SAM_Left; Type: QD000P40CD; Serial: TP:1644
- Measurement SW: DASY52, Version 52.8 (8);SEMCAD X Version 14.6.10 (7331)

Configuration/Pin=250mW/Area Scan (61x61x1): Interpolated grid: dx=1.500 mm, dy=1.500 mm
Maximum value of SAR (interpolated) = 3.08 W/kg

Configuration/Pin=250mW/Zoom Scan (5x5x7)/Cube 0: Measurement grid: dx=8mm, dy=8mm, dz=5mm
Reference Value = 60.13 V/m; Power Drift = -0.08 dB
Peak SAR (extrapolated) = 3.51 W/kg
SAR(1 g) = 2.43 W/kg; SAR(10 g) = 1.61 W/kg
Maximum value of SAR (measured) = 3.03 W/kg

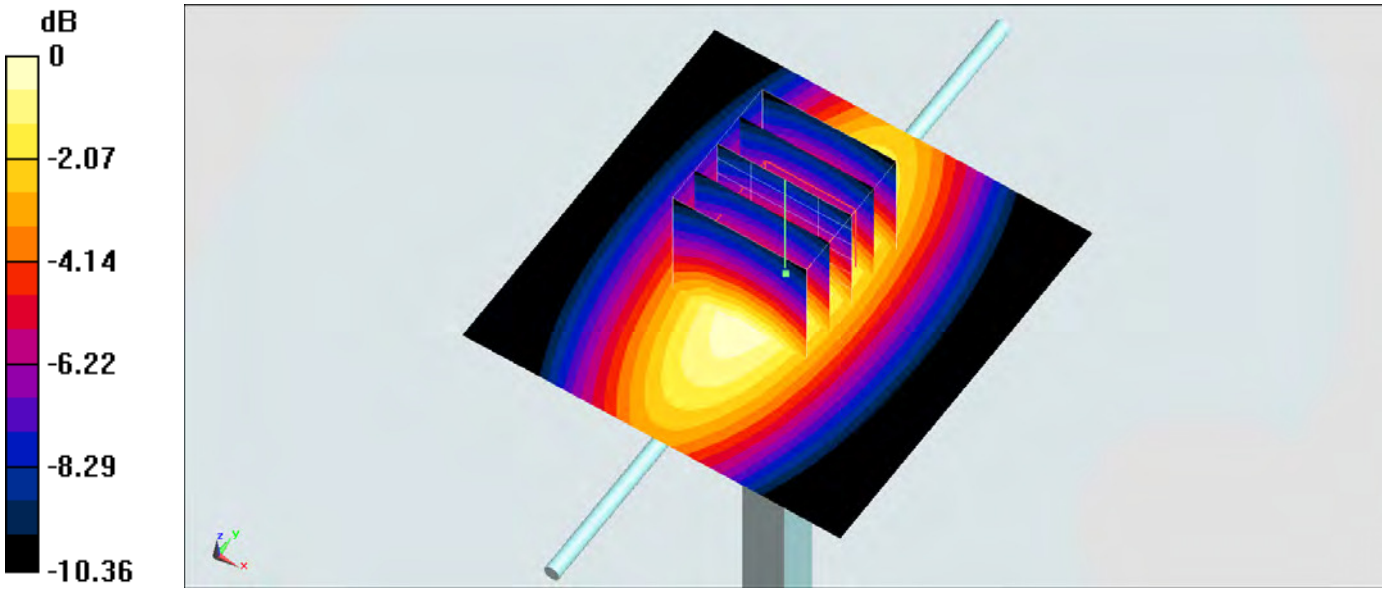

0 dB = 3.03 W/kg = 4.81 dBW/kg

System Check_Body_835MHz_151120

DUT: D835V2-499

Communication System: CW; Frequency: 835 MHz;Duty Cycle: 1:1
Medium: MSL_850_151120 Medium parameters used: f = 835 MHz; σ = 1.003 S/m; ε_r = 54.968; ρ = 1000 kg/m^3
Ambient Temperature：23.2 ℃; Liquid Temperature：22.2 ℃

DASY5 Configuration:
- Probe: ES3DV3 - SN3270; ConvF(6.24, 6.24, 6.24); Calibrated: 2015/9/28;
- Sensor-Surface: 2mm (Mechanical Surface Detection)
- Electronics: DAE4 Sn778; Calibrated: 2015/8/25
- Phantom: SAM-Right; Type: SAM; Serial: 1795
- Measurement SW: DASY52, Version 52.8 (8);SEMCAD X Version 14.6.10 (7331)

Configuration/Pin=250mW/Area Scan (61x61x1): Interpolated grid: dx=1.500 mm, dy=1.500 mm
Maximum value of SAR (interpolated) = 2.76 W/kg

Configuration/Pin=250mW/Zoom Scan (5x5x7)/Cube 0: Measurement grid: dx=8mm, dy=8mm, dz=5mm
Reference Value = 54.23 V/m; Power Drift = -0.02 dB
Peak SAR (extrapolated) = 3.41 W/kg
SAR(1 g) = 2.38 W/kg; SAR(10 g) = 1.58 W/kg
Maximum value of SAR (measured) = 2.77 W/kg

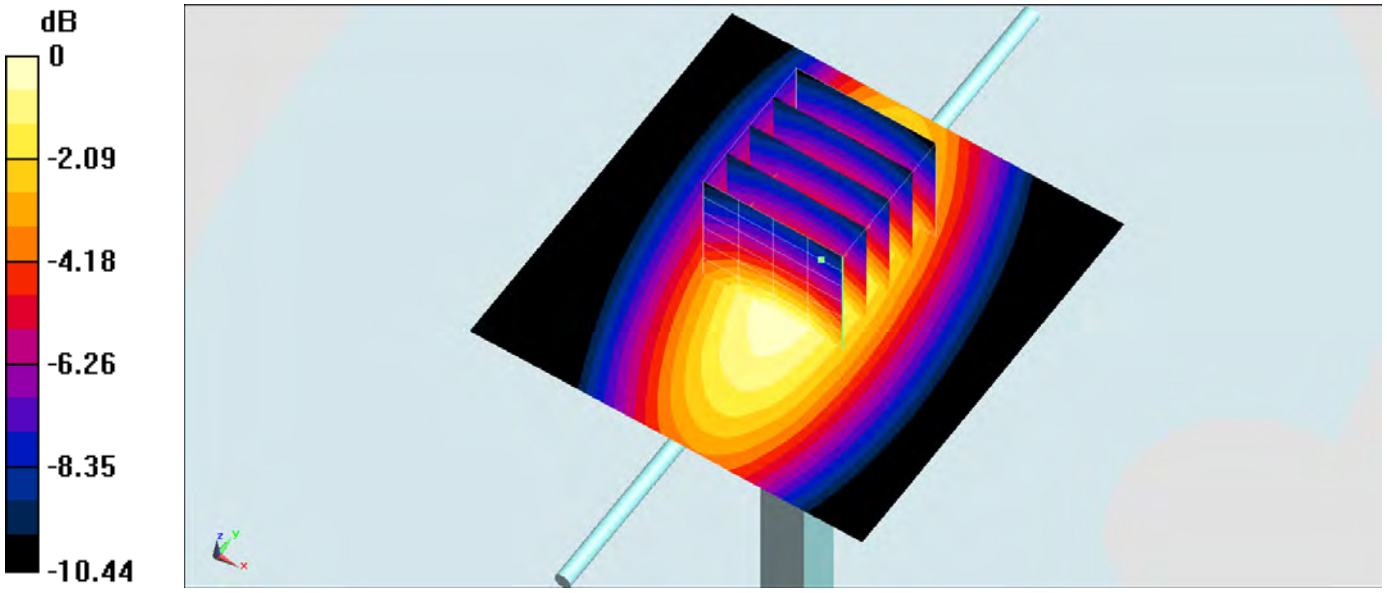

0 dB = 2.77 W/kg = 4.42 dBW/kg

System Check_Head_1900MHz_151123

DUT: D1900V2_5d041

Communication System: CW; Frequency: 1900 MHz;Duty Cycle: 1:1
Medium: HSL_1900_151123 Medium parameters used: f = 1900 MHz; σ = 1.423 S/m; ε_r = 38.572; ρ = 1000 kg/m^3
Ambient Temperature：23.8 ℃; Liquid Temperature：22.8 ℃

DASY5 Configuration:
- Probe: EX3DV4 - SN3931; ConvF(8.31, 8.31, 8.31); Calibrated: 2015/10/1;
- Sensor-Surface: 1.4mm (Mechanical Surface Detection)
- Electronics: DAE3 Sn577; Calibrated: 2015/9/24
- Phantom: SAM-Right; Type: SAM; Serial: 1795
- Measurement SW: DASY52, Version 52.8 (8);SEMCAD X Version 14.6.10 (7331)

Configuration/Pin=250mW/Area Scan (61x61x1): Interpolated grid: dx=1.500 mm, dy=1.500 mm
Maximum value of SAR (interpolated) = 16.3 W/kg

Configuration/Pin=250mW/Zoom Scan (5x5x7)/Cube 0: Measurement grid: dx=8mm, dy=8mm, dz=5mm
Reference Value = 106.8 V/m; Power Drift = 0.01 dB
Peak SAR (extrapolated) = 18.3 W/kg
SAR(1 g) = 9.66 W/kg; SAR(10 g) = 4.96 W/kg
Maximum value of SAR (measured) = 15.3 W/kg

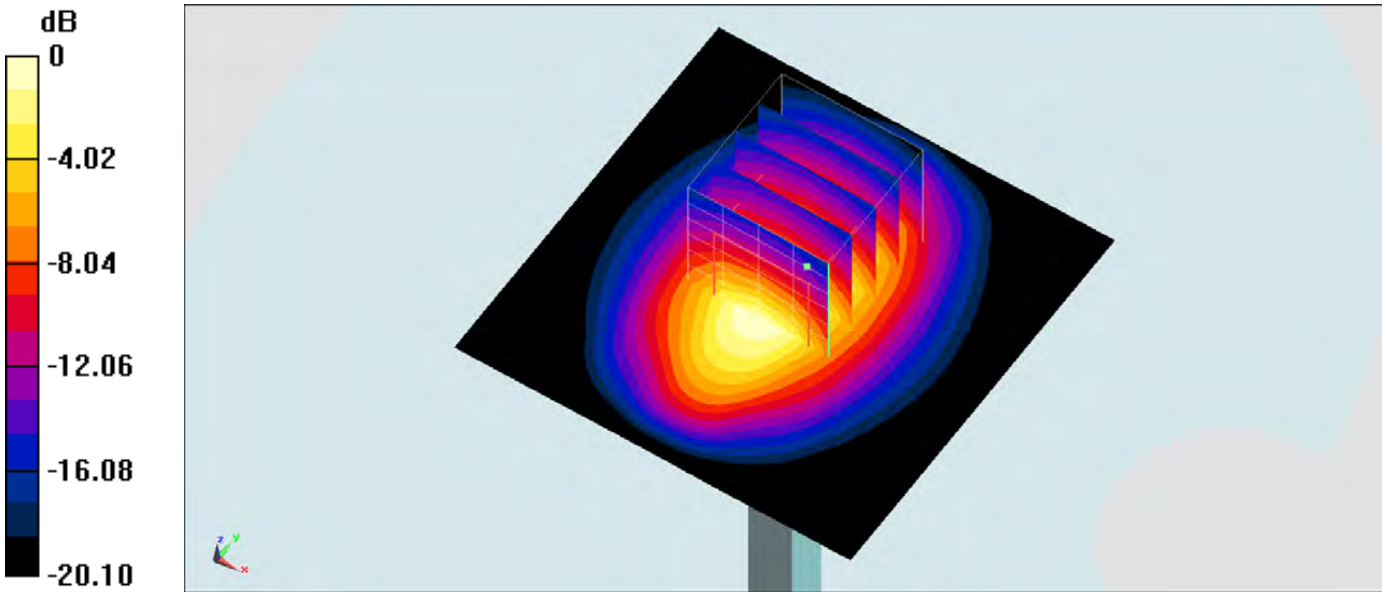

0 dB = 15.3 W/kg = 11.85 dBW/kg

System Check_Body_1900MHz_151117

DUT: D1900V2_5d041

Communication System: CW ; Frequency: 1900 MHz;Duty Cycle: 1:1
Medium: MSL_1900_151117 Medium parameters used: f = 1900 MHz; σ = 1.556 S/m; ε_r = 51.544; ρ = 1000 kg/m^3
Ambient Temperature：23.7 ℃; Liquid Temperature：22.7 ℃

DASY5 Configuration:
- Probe: ES3DV3 - SN3270; ConvF(4.78, 4.78, 4.78); Calibrated: 2015/9/28;
- Sensor-Surface: 2mm (Mechanical Surface Detection)
- Electronics: DAE4 Sn778; Calibrated: 2015/8/25
- Phantom: SAM_Left; Type: QD000P40CD; Serial: TP:1644
- Measurement SW: DASY52, Version 52.8 (8);SEMCAD X Version 14.6.10 (7331)

Configuration/Pin=250mW/Area Scan (61x61x1): Interpolated grid: dx=1.500 mm, dy=1.500 mm
Maximum value of SAR (interpolated) = 13.0 W/kg

Configuration/Pin=250mW/Zoom Scan (5x5x7)/Cube 0: Measurement grid: dx=8mm, dy=8mm, dz=5mm
Reference Value = 94.40 V/m; Power Drift = -0.10 dB
Peak SAR (extrapolated) = 17.3 W/kg
SAR(1 g) = 9.84 W/kg; SAR(10 g) = 5.17 W/kg
Maximum value of SAR (measured) = 12.4 W/kg

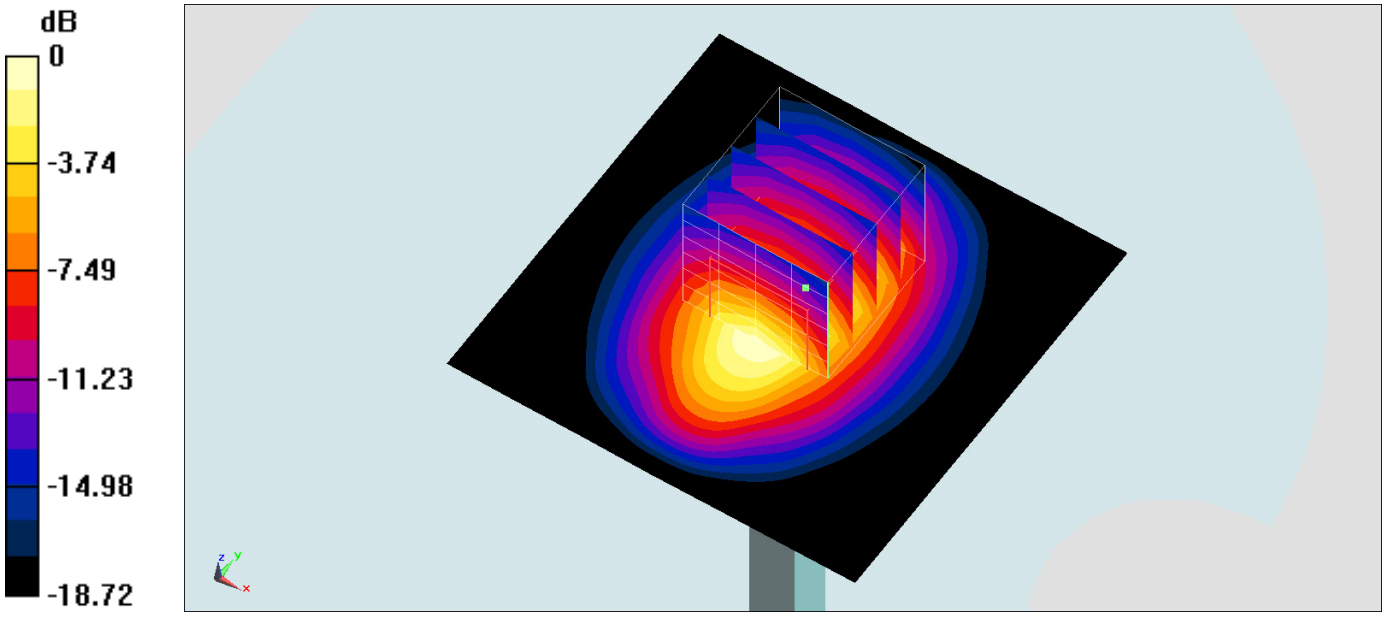

0 dB = 12.4 W/kg = 10.93 dBW/kg

Test Laboratory: Sporton International Inc. SAR/HAC Testing Lab Date: 2015/12/2

System Check_Body_1900MHz_151202

DUT: D1900V2_5d041

Communication System: CW; Frequency: 1900 MHz;Duty Cycle: 1:1
Medium: MSL_1900_151202 Medium parameters used: f = 1900 MHz; σ = 1.574 S/m; ε_r = 54.7; ρ = 1000 kg/m^3
Ambient Temperature：23.2 ℃； Liquid Temperature：22.2 ℃

DASY5 Configuration:
- Probe: EX3DV4 - SN3931; ConvF(7.94, 7.94, 7.94); Calibrated: 2015/10/1;
- Sensor-Surface: 1.4mm (Mechanical Surface Detection)
- Electronics: DAE3 Sn577; Calibrated: 2015/9/24
- Phantom: SAM-Right; Type: SAM; Serial: 1795
- Measurement SW: DASY52, Version 52.8 (8);SEMCAD X Version 14.6.10 (7331)

Configuration/Pin=250mW/Area Scan (61x61x1): Interpolated grid: dx=1.500 mm, dy=1.500 mm
Maximum value of SAR (interpolated) = 15.9 W/kg

Configuration/Pin=250mW/Zoom Scan (5x5x7)/Cube 0: Measurement grid: dx=8mm, dy=8mm, dz=5mm
Reference Value = 104.2 V/m; Power Drift = -0.10 dB
Peak SAR (extrapolated) = 18.0 W/kg
SAR(1 g) = 10.1 W/kg; SAR(10 g) = 5.31 W/kg
Maximum value of SAR (measured) = 15.0 W/kg

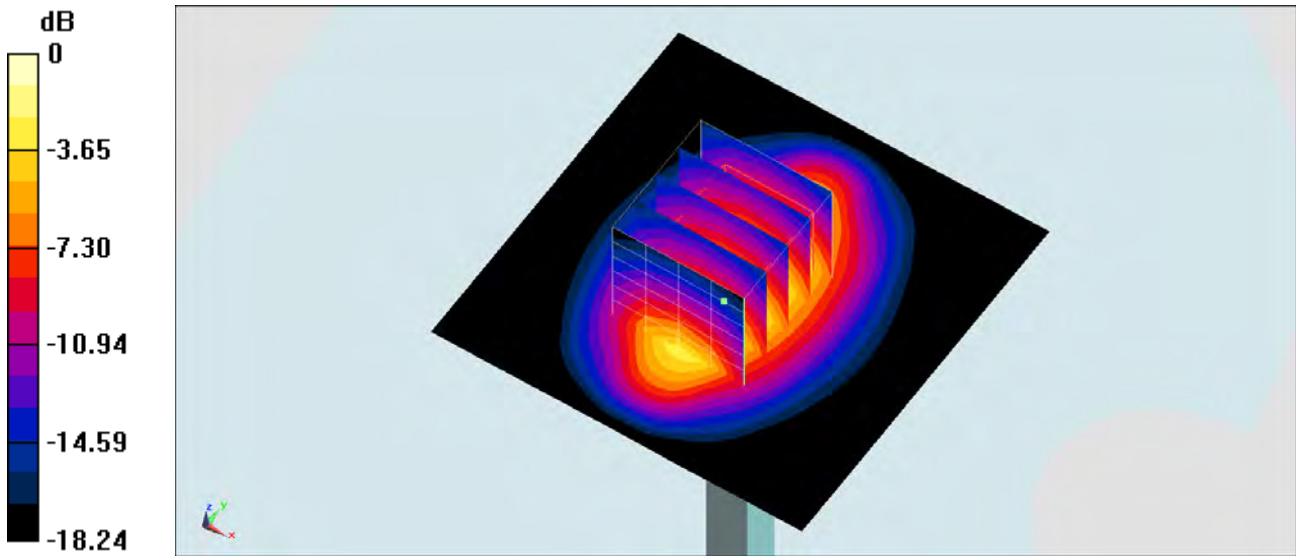

0 dB = 15.0 W/kg = 11.76 dBW/kg

System Check_Head_2450MHz_151128

DUT: D2450V2-736

Communication System: CW; Frequency: 2450 MHz;Duty Cycle: 1:1
Medium: HSL_2450_151128 Medium parameters used: f = 2450 MHz; σ = 1.727 S/m; ε_r = 38.591; ρ = 1000 kg/m^3
Ambient Temperature：23.5 ℃； Liquid Temperature：22.5 ℃

DASY5 Configuration:
- Probe: EX3DV4 - SN3931; ConvF(7.51, 7.51, 7.51); Calibrated: 2015/10/1;
- Sensor-Surface: 1.4mm (Mechanical Surface Detection)
- Electronics: DAE3 Sn577; Calibrated: 2015/9/24
- Phantom: SAM_Left; Type: QD000P40CD; Serial: TP:1644
- Measurement SW: DASY52, Version 52.8 (8);SEMCAD X Version 14.6.10 (7331)

Configuration/Pin=250mW/Area Scan (71x71x1): Interpolated grid: dx=1.200 mm, dy=1.200 mm
Maximum value of SAR (interpolated) = 19.6 W/kg

Configuration/Pin=250mW/Zoom Scan (7x7x7)/Cube 0: Measurement grid: dx=5mm, dy=5mm, dz=5mm
Reference Value = 112.0 V/m; Power Drift = -0.06 dB
Peak SAR (extrapolated) = 25.2 W/kg
SAR(1 g) = 12.4 W/kg; SAR(10 g) = 5.79 W/kg
Maximum value of SAR (measured) = 20.5 W/kg

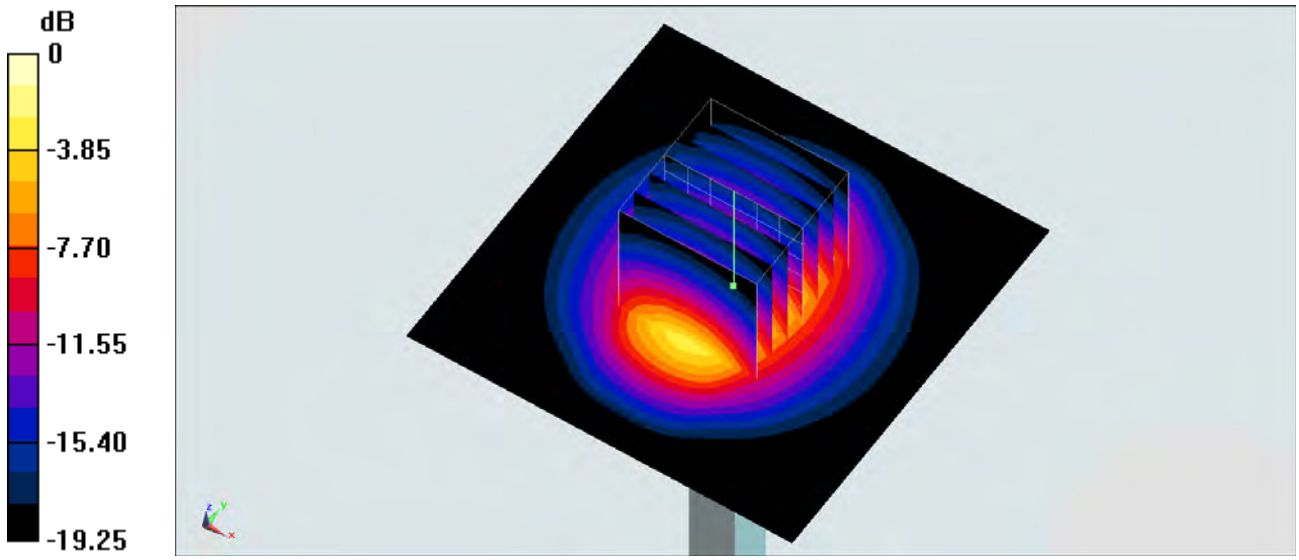

0 dB = 20.5 W/kg = 13.12 dBW/kg

System Check_Body_2450MHz_151121

DUT: D2450V2-736

Communication System: CW; Frequency: 2450 MHz;Duty Cycle: 1:1
Medium: MSL_2450_151121 Medium parameters used: f = 2450 MHz; σ = 1.974 S/m; ε_r = 51.268; ρ = 1000 kg/m^3
Ambient Temperature：23.2 ℃; Liquid Temperature：22.2 ℃

DASY5 Configuration:
- Probe: ES3DV3 - SN3270; ConvF(4.37, 4.37, 4.37); Calibrated: 2015/9/28;
- Sensor-Surface: 2mm (Mechanical Surface Detection)
- Electronics: DAE4 Sn778; Calibrated: 2015/8/25
- Phantom: SAM_Left; Type: QD000P40CD; Serial: TP:1644
- Measurement SW: DASY52, Version 52.8 (8);SEMCAD X Version 14.6.10 (7331)

Configuration/Pin=250mW/Area Scan (71x71x1): Interpolated grid: dx=1.200 mm, dy=1.200 mm
Maximum value of SAR (interpolated) = 18.0 W/kg

Configuration/Pin=250mW/Zoom Scan (7x7x7)/Cube 0: Measurement grid: dx=5mm, dy=5mm, dz=5mm
Reference Value = 106.0 V/m; Power Drift = -0.06 dB
Peak SAR (extrapolated) = 25.7 W/kg
SAR(1 g) = 12.3 W/kg; SAR(10 g) = 5.64 W/kg
Maximum value of SAR (measured) = 18.7 W/kg

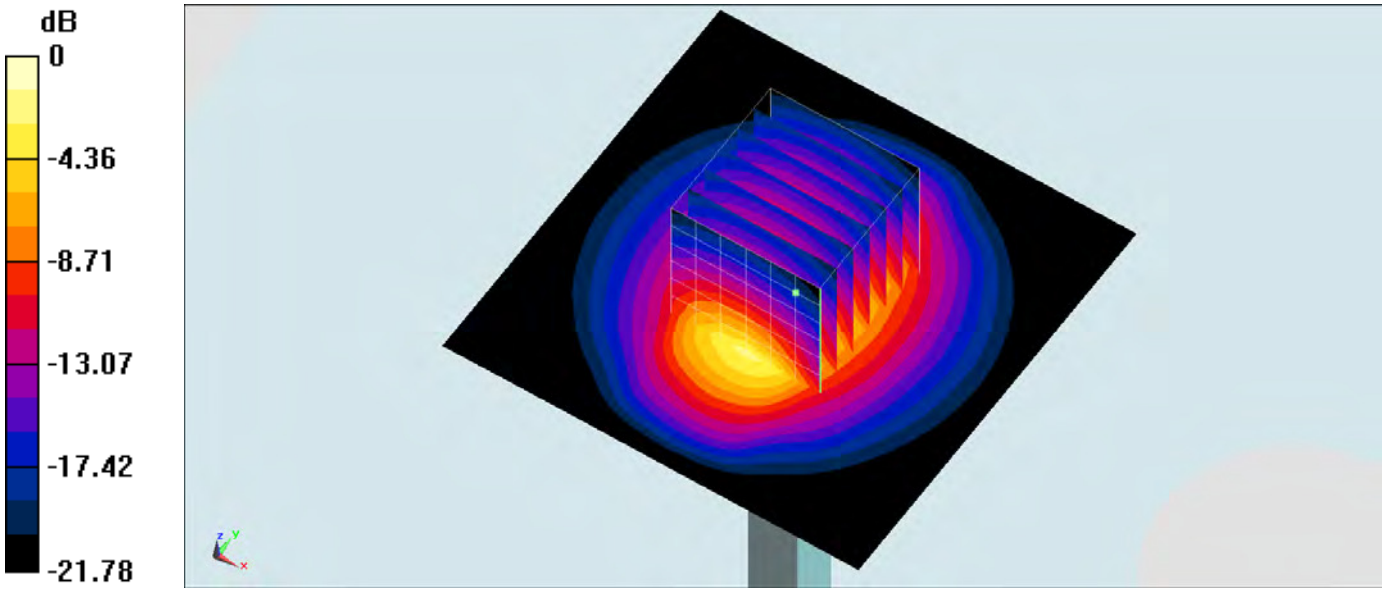

0 dB = 18.7 W/kg = 12.72 dBW/kg

System Check_Head_2600MHz_151123

DUT: D2600V2-1008

Communication System: CW; Frequency: 2600 MHz;Duty Cycle: 1:1
Medium: HSL_2600_151123 Medium parameters used: f = 2600 MHz; σ = 2.025 S/m; ε_r = 38.168; ρ = 1000 kg/m^3
Ambient Temperature：23.5 ℃; Liquid Temperature：22.5 ℃

DASY5 Configuration:
- Probe: EX3DV4 - SN3931; ConvF(7.29, 7.29, 7.29); Calibrated: 2015/10/1;
- Sensor-Surface: 1.4mm (Mechanical Surface Detection)
- Electronics: DAE3 Sn577; Calibrated: 2015/9/24
- Phantom: SAM_Left; Type: QD000P40CD; Serial: TP:1644
- Measurement SW: DASY52, Version 52.8 (8);SEMCAD X Version 14.6.10 (7331)

Configuration/Pin=250mW/Area Scan (61x61x1): Interpolated grid: dx=1.200 mm, dy=1.200 mm
Maximum value of SAR (interpolated) = 23.4 W/kg

Configuration/Pin=250mW/Zoom Scan (7x7x7)/Cube 0: Measurement grid: dx=5mm, dy=5mm, dz=5mm
Reference Value = 108.2 V/m; Power Drift = -0.02 dB
Peak SAR (extrapolated) = 28.5 W/kg
SAR(1 g) = 13 W/kg; SAR(10 g) = 5.88 W/kg
Maximum value of SAR (measured) = 22.4 W/kg

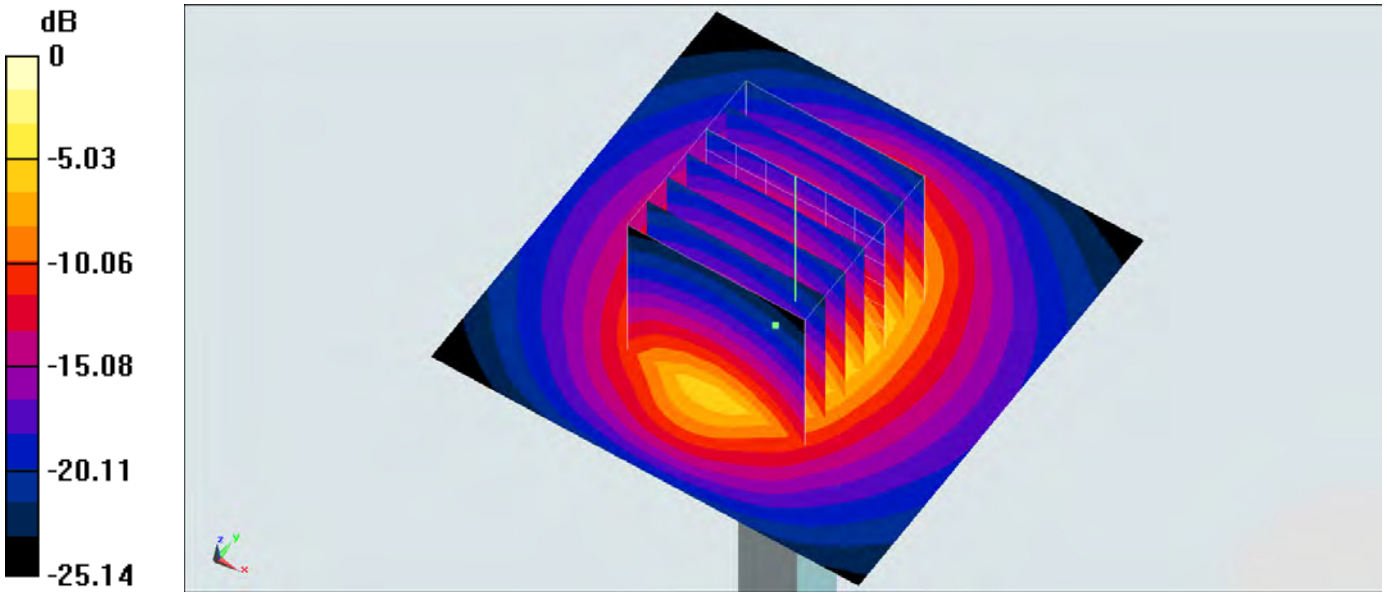

0 dB = 22.4 W/kg = 13.50 dBW/kg

System Check_Body_2600MHz_151114

DUT: D2600V2-1008

Communication System: CW; Frequency: 2600 MHz;Duty Cycle: 1:1
Medium: MSL_2600_151114 Medium parameters used: f = 2600 MHz; σ = 2.226 S/m; ε_r = 53.171; ρ = 1000 kg/m^3
Ambient Temperature：23.4 ℃; Liquid Temperature：22.4 ℃

DASY5 Configuration:
- Probe: EX3DV4 - SN3578; ConvF(6.69, 6.69, 6.69); Calibrated: 2015/3/31;
- Sensor-Surface: 1.4mm (Mechanical Surface Detection)
- Electronics: DAE4 Sn915; Calibrated: 2015/6/11
- Phantom: SAM_Left; Type: QD000P40CD; Serial: TP:1644
- Measurement SW: DASY52, Version 52.8 (8);SEMCAD X Version 14.6.10 (7331)

Configuration/Pin=250mW/Area Scan (71x71x1): Interpolated grid: dx=1.200 mm, dy=1.200 mm
Maximum value of SAR (interpolated) = 23.8 W/kg

Configuration/Pin=250mW/Zoom Scan (7x7x7)/Cube 0: Measurement grid: dx=5mm, dy=5mm, dz=5mm
Reference Value = 104.2 V/m; Power Drift = 0.17 dB
Peak SAR (extrapolated) = 29.9 W/kg
SAR(1 g) = 13.9 W/kg; SAR(10 g) = 6.15 W/kg
Maximum value of SAR (measured) = 23.7 W/kg

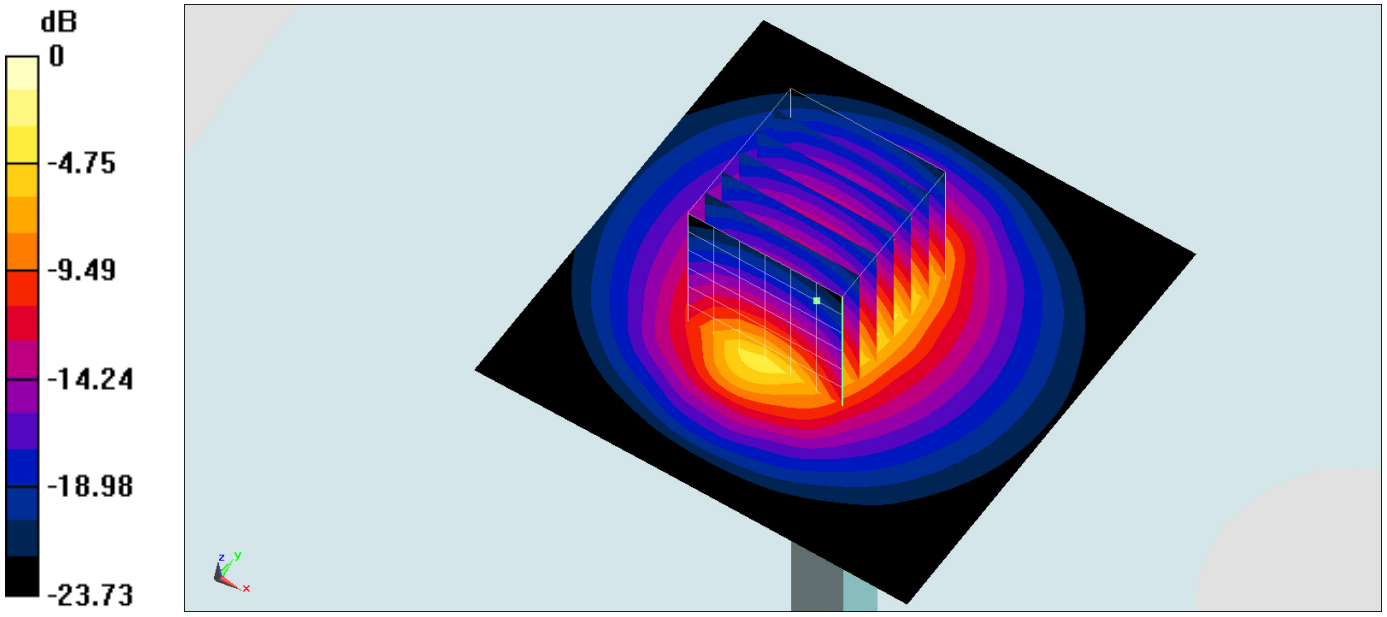

0 dB = 23.7 W/kg = 13.75 dBW/kg

System Check_Body_2600MHz_151121

DUT: D2600V2-1008

Communication System: CW; Frequency: 2600 MHz;Duty Cycle: 1:1
Medium: MSL_2600_151121 Medium parameters used: f = 2600 MHz; σ = 2.166 S/m; ε_r = 50.686; ρ = 1000 kg/m^3
Ambient Temperature：23.2 ℃; Liquid Temperature：22.2 ℃

DASY5 Configuration:
- Probe: ES3DV3 - SN3270; ConvF(4.27, 4.27, 4.27); Calibrated: 2015/9/28;
- Sensor-Surface: 2mm (Mechanical Surface Detection)
- Electronics: DAE4 Sn778; Calibrated: 2015/8/25
- Phantom: SAM_Left; Type: QD000P40CD; Serial: TP:1644
- Measurement SW: DASY52, Version 52.8 (8);SEMCAD X Version 14.6.10 (7331)

Configuration/Pin=250mW/Area Scan (71x71x1): Interpolated grid: dx=1.200 mm, dy=1.200 mm
Maximum value of SAR (interpolated) = 19.1 W/kg

Configuration/Pin=250mW/Zoom Scan (7x7x7)/Cube 0: Measurement grid: dx=5mm, dy=5mm, dz=5mm
Reference Value = 97.50 V/m; Power Drift = 0.19 dB
Peak SAR (extrapolated) = 29.1 W/kg
SAR(1 g) = 13.2 W/kg; SAR(10 g) = 5.88 W/kg
Maximum value of SAR (measured) = 21.0 W/kg

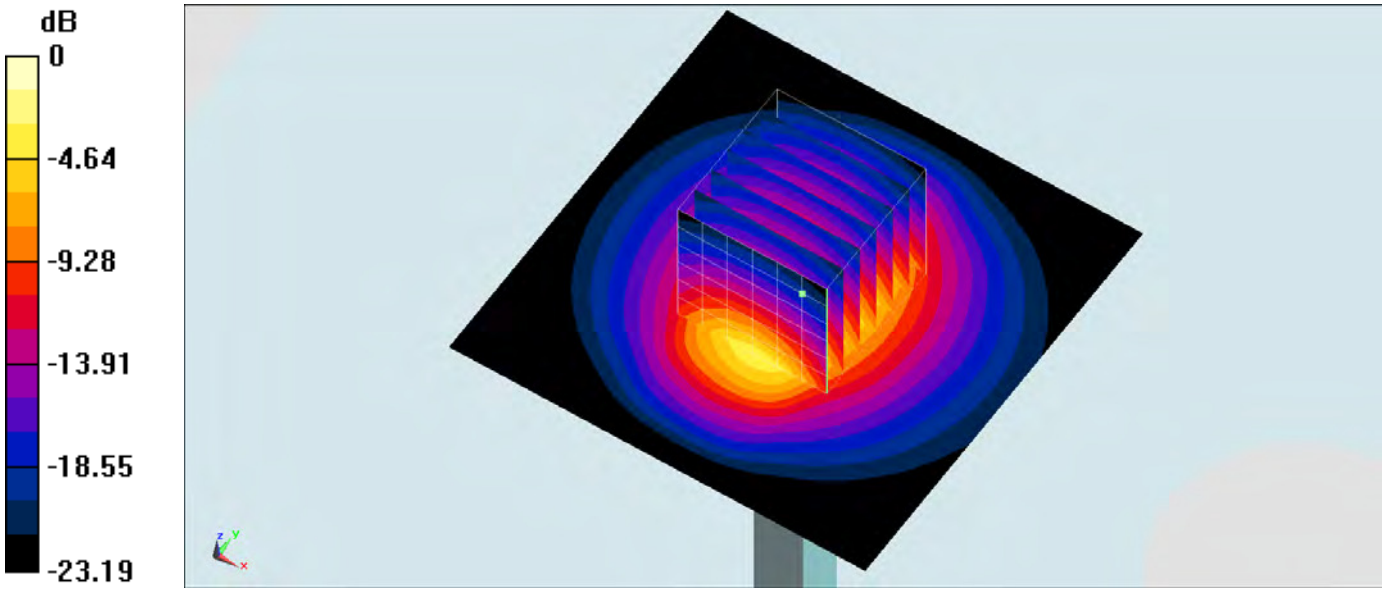

0 dB = 21.0 W/kg = 13.22 dBW/kg

System Check_Head_5250MHz_151122

DUT: D5GHzV2-1128-5250

Communication System: CW; Frequency: 5250 MHz;Duty Cycle: 1:1
Medium: HSL_5G_151122 Medium parameters used: f = 5250 MHz; σ = 4.541 S/m; ε_r = 36.424; ρ = 1000 kg/m^3
Ambient Temperature：23.6 ℃; Liquid Temperature：22.6 ℃

DASY5 Configuration:
- Probe: EX3DV4 - SN3931; ConvF(5.13, 5.13, 5.13); Calibrated: 2015/10/1;
- Sensor-Surface: 1.4mm (Mechanical Surface Detection)
- Electronics: DAE3 Sn577; Calibrated: 2015/9/24
- Phantom: SAM-Right; Type: SAM; Serial: 1795
- Measurement SW: DASY52, Version 52.8 (8);SEMCAD X Version 14.6.10 (7331)

Configuration/Pin=100mW/Area Scan (71x71x1): Interpolated grid: dx=1.000 mm, dy=1.000 mm
Maximum value of SAR (interpolated) = 18.7 W/kg

Configuration/Pin=100mW/Zoom Scan (7x7x7)/Cube 0: Measurement grid: dx=4mm, dy=4mm, dz=1.4mm
Reference Value = 68.68 V/m; Power Drift = 0.15 dB
Peak SAR (extrapolated) = 29.2 W/kg
SAR(1 g) = 7.37 W/kg; SAR(10 g) = 2.14 W/kg
Maximum value of SAR (measured) = 17.6 W/kg

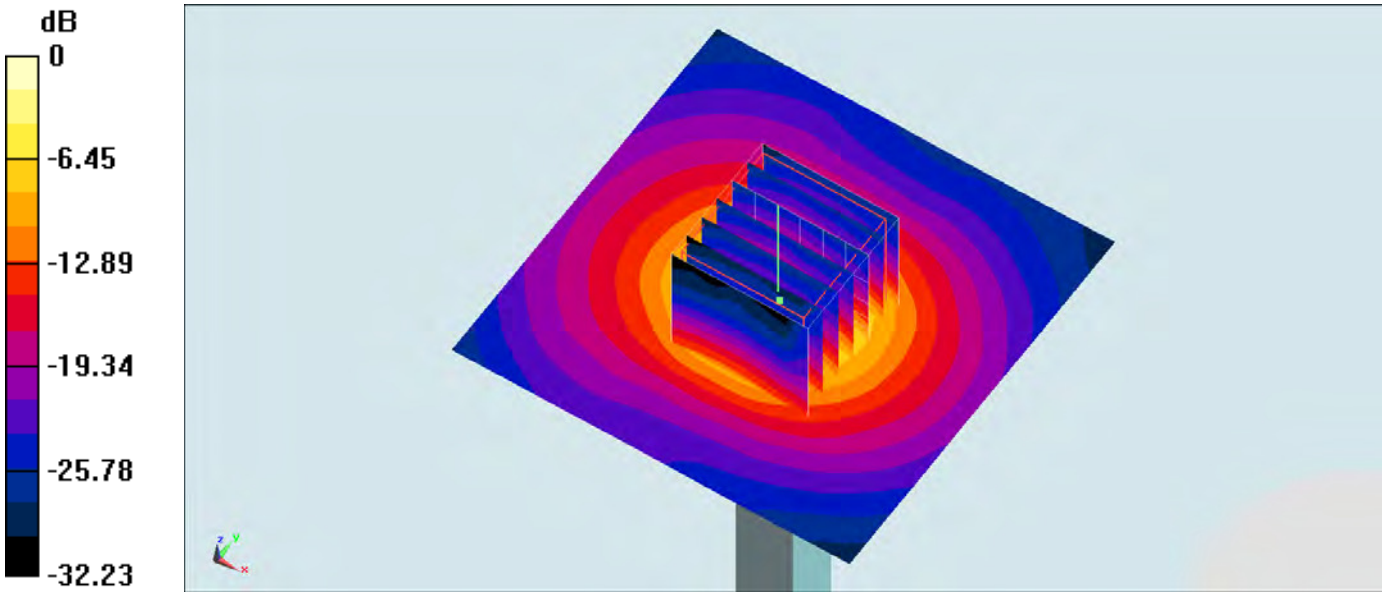

0 dB = 17.6 W/kg = 12.46 dBW/kg

System Check_Body_5250MHz_151121

DUT: D5GHzV2-1128-5250

Communication System: CW; Frequency: 5250 MHz;Duty Cycle: 1:1
Medium: MSL_5G_151121 Medium parameters used: f = 5250 MHz; σ = 5.527 S/m; ε_r = 46.945; ρ = 1000 kg/m^3
Ambient Temperature：23.3 ℃; Liquid Temperature：22.3 ℃

DASY5 Configuration:
- Probe: EX3DV4 - SN3931; ConvF(4.48, 4.48, 4.48); Calibrated: 2015/10/1;
- Sensor-Surface: 1.4mm (Mechanical Surface Detection)
- Electronics: DAE3 Sn577; Calibrated: 2015/9/24
- Phantom: SAM-Right; Type: SAM; Serial: 1795
- Measurement SW: DASY52, Version 52.8 (8);SEMCAD X Version 14.6.10 (7331)

Configuration/Pin=100mW/Area Scan (71x71x1): Interpolated grid: dx=1.000 mm, dy=1.000 mm
Maximum value of SAR (interpolated) = 18.4 W/kg

Configuration/Pin=100mW/Zoom Scan (7x7x7)/Cube 0: Measurement grid: dx=4mm, dy=4mm, dz=1.4mm
Reference Value = 66.27 V/m; Power Drift = -0.10 dB
Peak SAR (extrapolated) = 28.5 W/kg
SAR(1 g) = 7.12 W/kg; SAR(10 g) = 1.95 W/kg
Maximum value of SAR (measured) = 17.6 W/kg

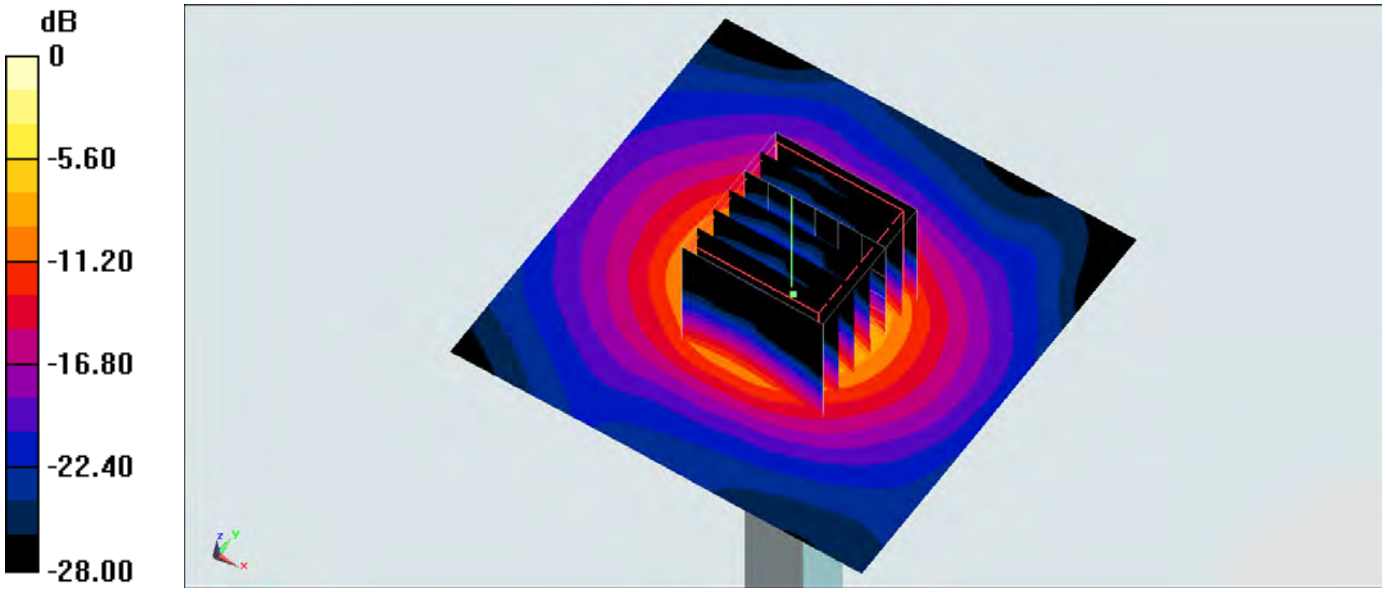

0 dB = 17.6 W/kg = 12.46 dBW/kg

System Check_Head_5600MHz_151122

DUT: D5GHzV2-1128-5600

Communication System: CW; Frequency: 5600 MHz;Duty Cycle: 1:1
Medium: HSL_5G_151122 Medium parameters used: f = 5600 MHz; σ = 4.876 S/m; ε_r = 35.982; ρ = 1000 kg/m^3
Ambient Temperature：23.6 ℃; Liquid Temperature：22.6 ℃

DASY5 Configuration:
- Probe: EX3DV4 - SN3931; ConvF(4.42, 4.42, 4.42); Calibrated: 2015/10/1;
- Sensor-Surface: 1.4mm (Mechanical Surface Detection)
- Electronics: DAE3 Sn577; Calibrated: 2015/9/24
- Phantom: SAM-Right; Type: SAM; Serial: 1795
- Measurement SW: DASY52, Version 52.8 (8);SEMCAD X Version 14.6.10 (7331)

Configuration/Pin=100mW/Area Scan (71x71x1): Interpolated grid: dx=1.000 mm, dy=1.000 mm
Maximum value of SAR (interpolated) = 21.2 W/kg

Configuration/Pin=100mW/Zoom Scan (7x7x7)/Cube 0: Measurement grid: dx=4mm, dy=4mm, dz=1.4mm
Reference Value = 72.80 V/m; Power Drift = -0.07 dB
Peak SAR (extrapolated) = 33.8 W/kg
SAR(1 g) = 8.22 W/kg; SAR(10 g) = 2.26 W/kg
Maximum value of SAR (measured) = 20.1 W/kg

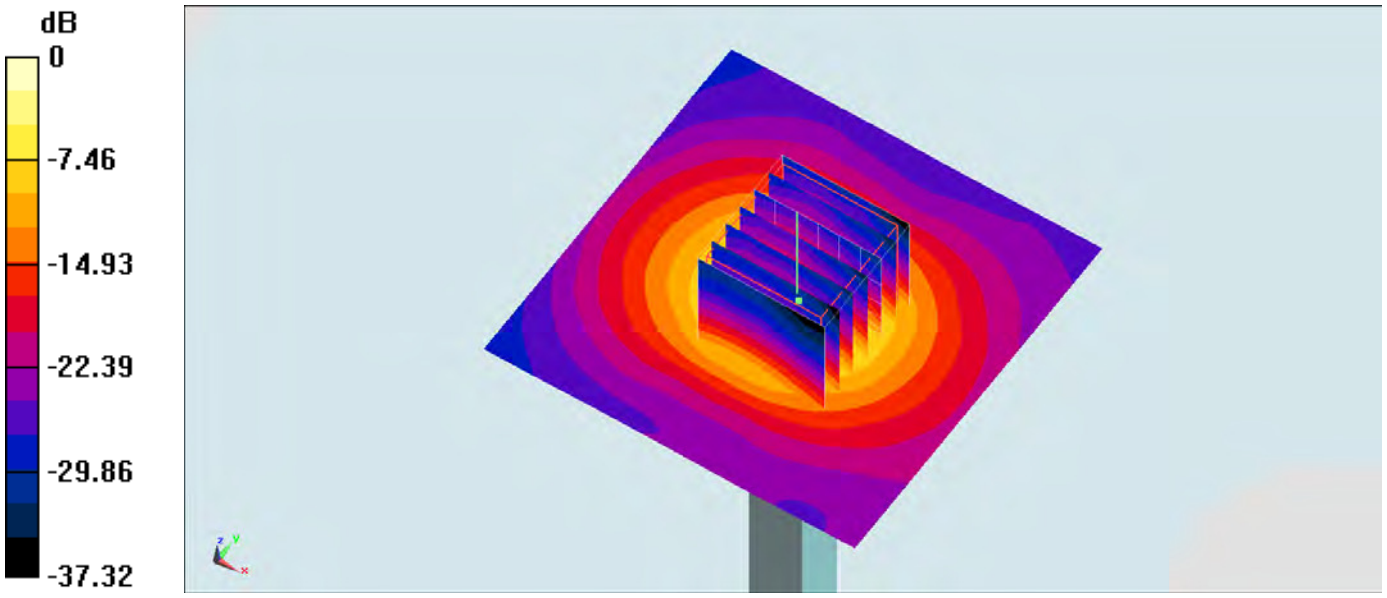

0 dB = 20.1 W/kg = 13.03 dBW/kg

System Check_Body_5600MHz_151121

DUT: D5GHzV2-1128-5600

Communication System: CW; Frequency: 5600 MHz;Duty Cycle: 1:1
Medium: MSL_5G_151121 Medium parameters used: f = 5600 MHz; σ = 5.982 S/m; ε_r = 46.283; ρ = 1000 kg/m^3
Ambient Temperature：23.3 ℃; Liquid Temperature：22.3 ℃

DASY5 Configuration:
- Probe: EX3DV4 - SN3931; ConvF(3.84, 3.84, 3.84); Calibrated: 2015/10/1;
- Sensor-Surface: 1.4mm (Mechanical Surface Detection)
- Electronics: DAE3 Sn577; Calibrated: 2015/9/24
- Phantom: SAM-Right; Type: SAM; Serial: 1795
- Measurement SW: DASY52, Version 52.8 (8);SEMCAD X Version 14.6.10 (7331)

Configuration/Pin=100mW/Area Scan (71x71x1): Interpolated grid: dx=1.000 mm, dy=1.000 mm
Maximum value of SAR (interpolated) = 20.7 W/kg

Configuration/Pin=100mW/Zoom Scan (7x7x7)/Cube 0: Measurement grid: dx=4mm, dy=4mm, dz=1.4mm
Reference Value = 68.26 V/m; Power Drift = -0.03 dB
Peak SAR (extrapolated) = 33.1 W/kg
SAR(1 g) = 7.83 W/kg; SAR(10 g) = 2.11 W/kg
Maximum value of SAR (measured) = 20.0 W/kg

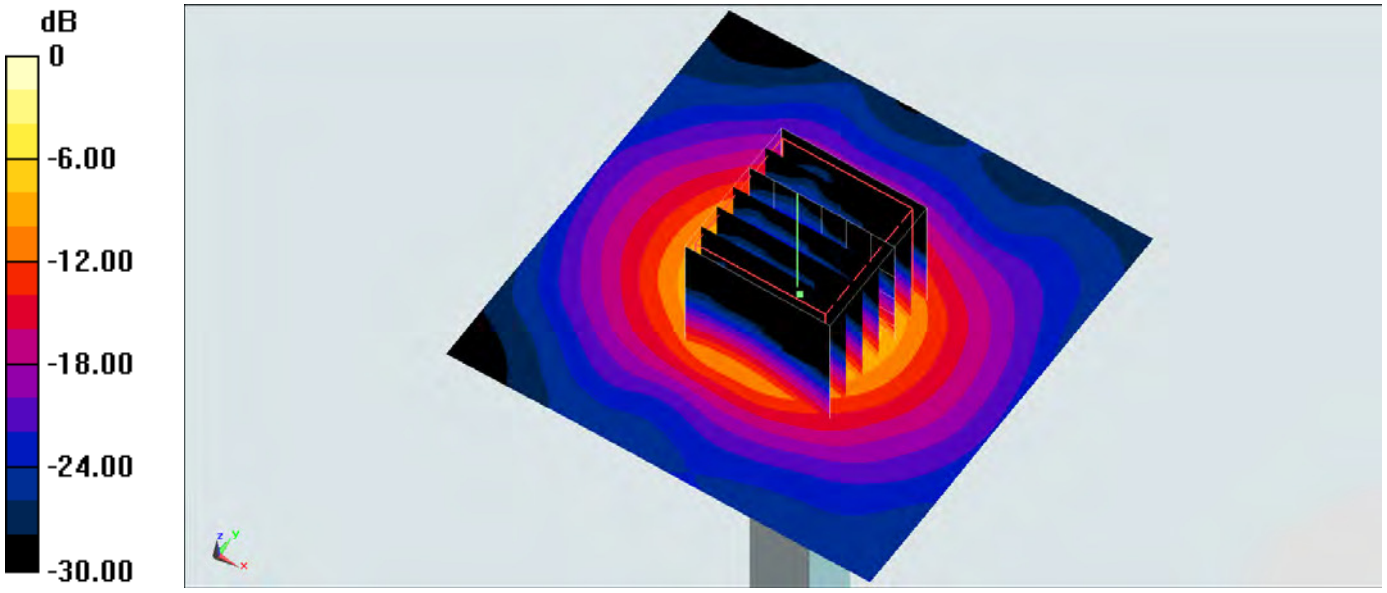

0 dB = 20.0 W/kg = 13.01 dBW/kg

System Check_Head_5750MHz_151122

DUT: D5GHzV2-1128-5750

Communication System: CW; Frequency: 5750 MHz;Duty Cycle: 1:1
Medium: HSL_5G_151122 Medium parameters used: f = 5750 MHz; σ = 5.024 S/m; ε_r = 35.796; ρ = 1000 kg/m^3
Ambient Temperature：23.6 ℃; Liquid Temperature：22.6 ℃

DASY5 Configuration:
- Probe: EX3DV4 - SN3931; ConvF(4.58, 4.58, 4.58); Calibrated: 2015/10/1;
- Sensor-Surface: 1.4mm (Mechanical Surface Detection)
- Electronics: DAE3 Sn577; Calibrated: 2015/9/24
- Phantom: SAM-Right; Type: SAM; Serial: 1795
- Measurement SW: DASY52, Version 52.8 (8);SEMCAD X Version 14.6.10 (7331)

Configuration/Pin=100mW/Area Scan (71x71x1): Interpolated grid: dx=1.000 mm, dy=1.000 mm
Maximum value of SAR (interpolated) = 19.3 W/kg

Configuration/Pin=100mW/Zoom Scan (7x7x7)/Cube 0: Measurement grid: dx=4mm, dy=4mm, dz=1.4mm
Reference Value = 69.01 V/m; Power Drift = -0.11 dB
Peak SAR (extrapolated) = 32.9 W/kg
SAR(1 g) = 7.51 W/kg; SAR(10 g) = 2.08 W/kg
Maximum value of SAR (measured) = 19.3 W/kg

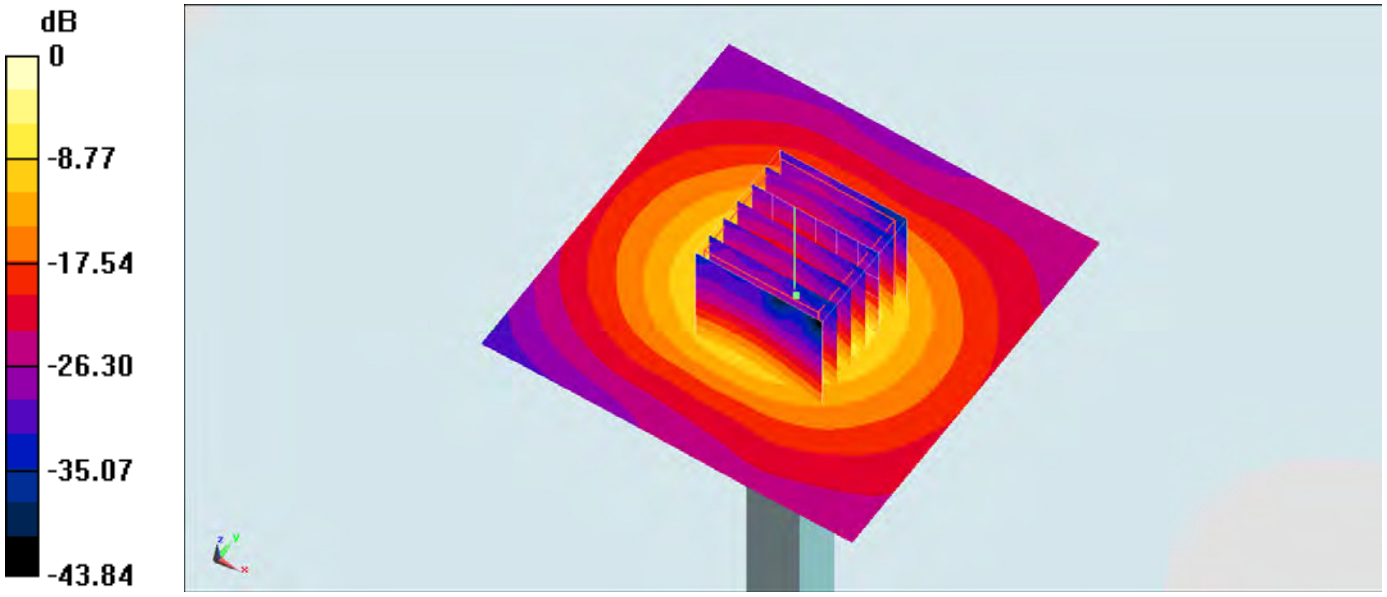

0 dB = 19.3 W/kg = 12.86 dBW/kg

System Check_Body_5750MHz_151121

DUT: D5GHzV2-1128-5750

Communication System: CW; Frequency: 5750 MHz;Duty Cycle: 1:1
Medium: MSL_5G_151121 Medium parameters used: f = 5750 MHz; σ = 6.185 S/m; ε_r = 46.016; ρ = 1000 kg/m^3
Ambient Temperature：23.3 ℃; Liquid Temperature：22.3 ℃

DASY5 Configuration:
- Probe: EX3DV4 - SN3931; ConvF(3.98, 3.98, 3.98); Calibrated: 2015/10/1;
- Sensor-Surface: 1.4mm (Mechanical Surface Detection)
- Electronics: DAE3 Sn577; Calibrated: 2015/9/24
- Phantom: SAM-Right; Type: SAM; Serial: 1795
- Measurement SW: DASY52, Version 52.8 (8);SEMCAD X Version 14.6.10 (7331)

Configuration/Pin=100mW/Area Scan (71x71x1): Interpolated grid: dx=1.000 mm, dy=1.000 mm
Maximum value of SAR (interpolated) = 19.1 W/kg

Configuration/Pin=100mW/Zoom Scan (7x7x7)/Cube 0: Measurement grid: dx=4mm, dy=4mm, dz=1.4mm
Reference Value = 65.44 V/m; Power Drift = -0.03 dB
Peak SAR (extrapolated) = 32.7 W/kg
SAR(1 g) = 7.27 W/kg; SAR(10 g) = 1.96 W/kg
Maximum value of SAR (measured) = 19.1 W/kg

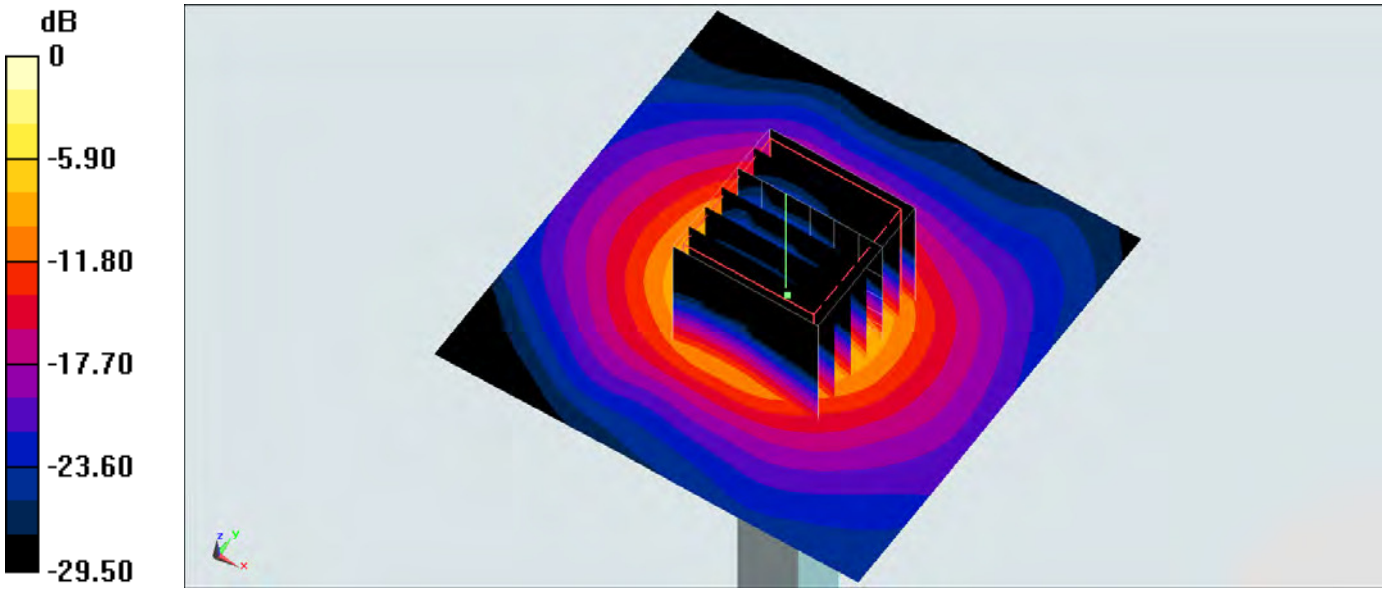

0 dB = 19.1 W/kg = 12.81 dBW/kg