System Check_Head_835MHz_160303

DUT: D835V2-499

Communication System: CW; Frequency: 835 MHz;Duty Cycle: 1:1
Medium: HSL_850_160303 Medium parameters used: f = 835 MHz; σ = 0.899 S/m; ε_r = 41.916; ρ = 1000 kg/m^3
Ambient Temperature：23.3 ℃; Liquid Temperature：22.3 ℃

DASY5 Configuration:
- Probe: ES3DV3 - SN3270; ConvF(6.32, 6.32, 6.32); Calibrated: 2015/9/28;
- Sensor-Surface: 3mm (Mechanical Surface Detection)
- Electronics: DAE4 Sn1490; Calibrated: 2015/9/14
- Phantom: SAM-Right; Type: SAM; Serial: 1795
- Measurement SW: DASY52, Version 52.8 (8);SEMCAD X Version 14.6.10 (7331)

Configuration/Pin=250mW/Area Scan (61x61x1): Interpolated grid: dx=1.500 mm, dy=1.500 mm
Maximum value of SAR (interpolated) = 2.94 W/kg

Configuration/Pin=250mW/Zoom Scan (5x5x7)/Cube 0: Measurement grid: dx=8mm, dy=8mm, dz=5mm
Reference Value = 61.52 V/m; Power Drift = -0.01 dB
Peak SAR (extrapolated) = 3.60 W/kg
SAR(1 g) = 2.27 W/kg; SAR(10 g) = 1.47 W/kg
Maximum value of SAR (measured) = 2.93 W/kg

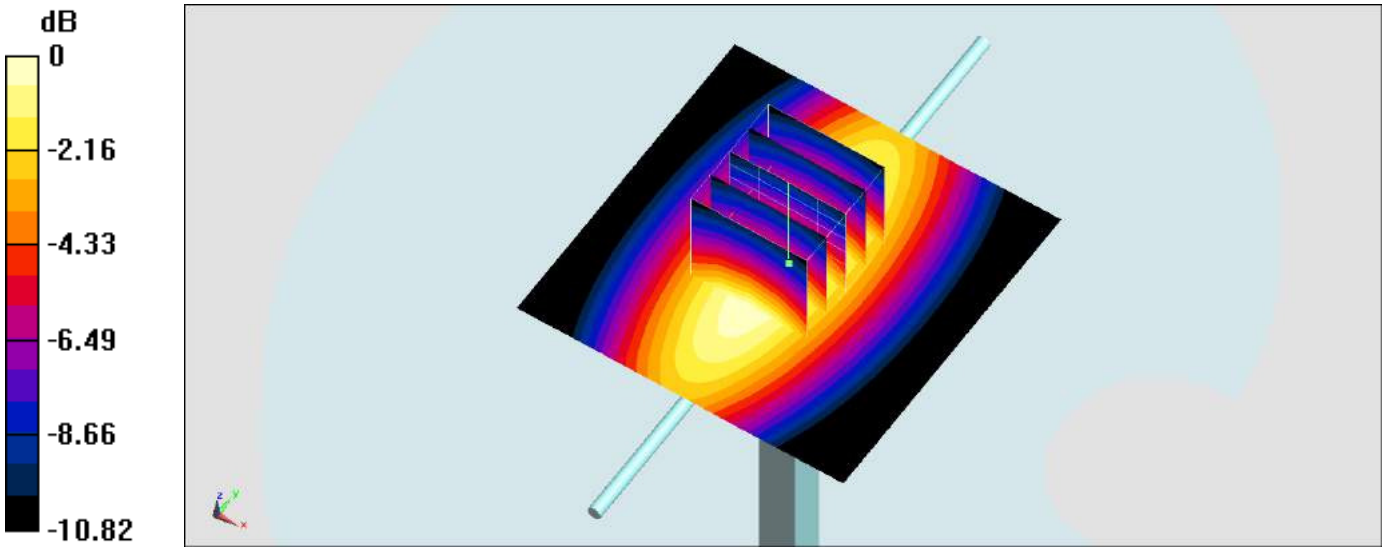

0 dB = 2.93 W/kg = 4.67 dBW/kg

System Check_Body_835MHz_160303

DUT: D835V2-499

Communication System: CW; Frequency: 835 MHz;Duty Cycle: 1:1
Medium: MSL_850_160303 Medium parameters used: f = 835 MHz; σ = 1.003 S/m; ε_r = 53.491; ρ = 1000 kg/m^3
Ambient Temperature：23.3 ℃; Liquid Temperature：22.3 ℃

DASY5 Configuration:
- Probe: ES3DV3 - SN3270; ConvF(6.24, 6.24, 6.24); Calibrated: 2015/9/28;
- Sensor-Surface: 3mm (Mechanical Surface Detection)
- Electronics: DAE4 Sn1490; Calibrated: 2015/9/14
- Phantom: SAM-Right; Type: SAM; Serial: 1795
- Measurement SW: DASY52, Version 52.8 (8);SEMCAD X Version 14.6.10 (7331)

Configuration/Pin=250mW/Area Scan (61x61x1): Interpolated grid: dx=1.500 mm, dy=1.500 mm
Maximum value of SAR (interpolated) = 2.92 W/kg

Configuration/Pin=250mW/Zoom Scan (5x5x7)/Cube 0: Measurement grid: dx=8mm, dy=8mm, dz=5mm
Reference Value = 56.07 V/m; Power Drift = -0.05 dB
Peak SAR (extrapolated) = 3.63 W/kg
SAR(1 g) = 2.52 W/kg; SAR(10 g) = 1.67 W/kg
Maximum value of SAR (measured) = 2.90 W/kg

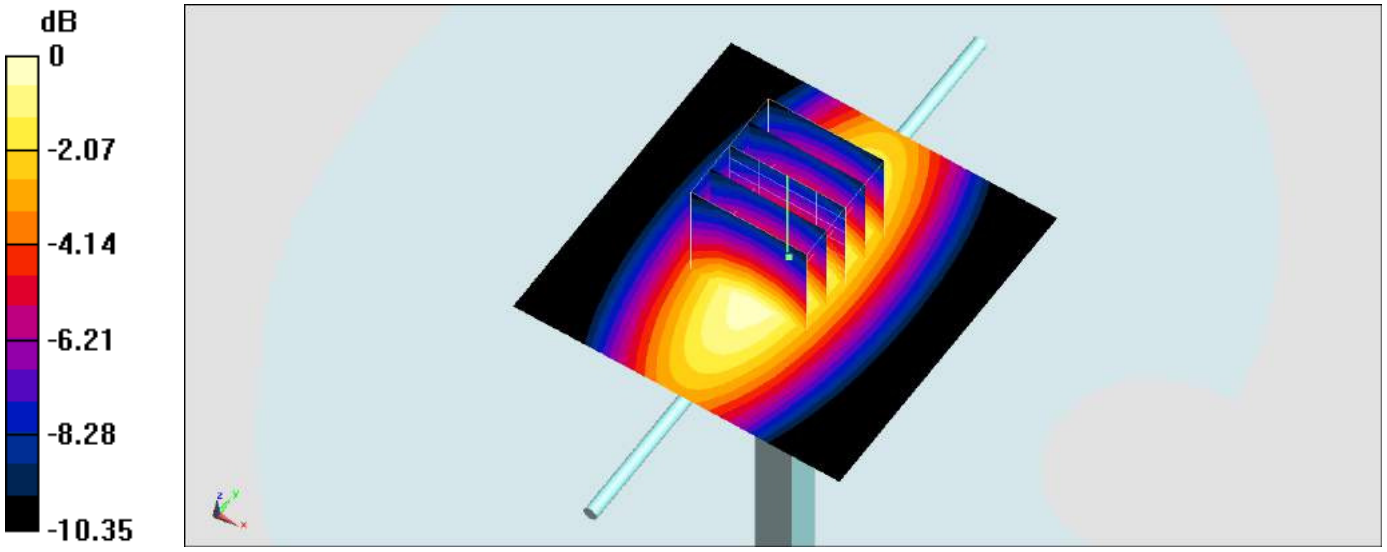

0 dB = 2.90 W/kg = 4.62 dBW/kg

System Check_Head_1900MHz_160301

DUT: D1900V2-5d041

Communication System: CW; Frequency: 1900 MHz;Duty Cycle: 1:1
Medium: HSL_1900_160301 Medium parameters used: f = 1900 MHz; σ = 1.43 S/m; ε_r = 41.101; ρ = 1000 kg/m^3
Ambient Temperature：23.4 ℃； Liquid Temperature：22.4 ℃

DASY5 Configuration
- Probe: EX3DV4 - SN3931; ConvF(8.31, 8.31, 8.31); Calibrated: 2015/10/1;
- Sensor-Surface: 1.4mm (Mechanical Surface Detection)
- Electronics: DAE3 Sn577; Calibrated: 2015/9/24
- Phantom: SAM_RIGHT; Type: QD000P40CD; Serial: 1719
- Measurement SW: DASY52, Version 52.8 (8); SEMCAD X Version 14.6.10 (7331)

Configuration/Pin=250mW/Area Scan (61x61x1): Interpolated grid: dx=1.500 mm, dy=1.500 mm
Maximum value of SAR (interpolated) = 17.0 W/kg

Configuration/Pin=250mW/Zoom Scan (5x5x7)/Cube 0: Measurement grid: dx=8mm, dy=8mm, dz=5mm
Reference Value = 109.5 V/m; Power Drift = -0.06 dB
Peak SAR (extrapolated) = 19.9 W/kg
SAR(1 g) = 10.5 W/kg; SAR(10 g) = 5.41 W/kg
Maximum value of SAR (measured) = 16.4 W/kg

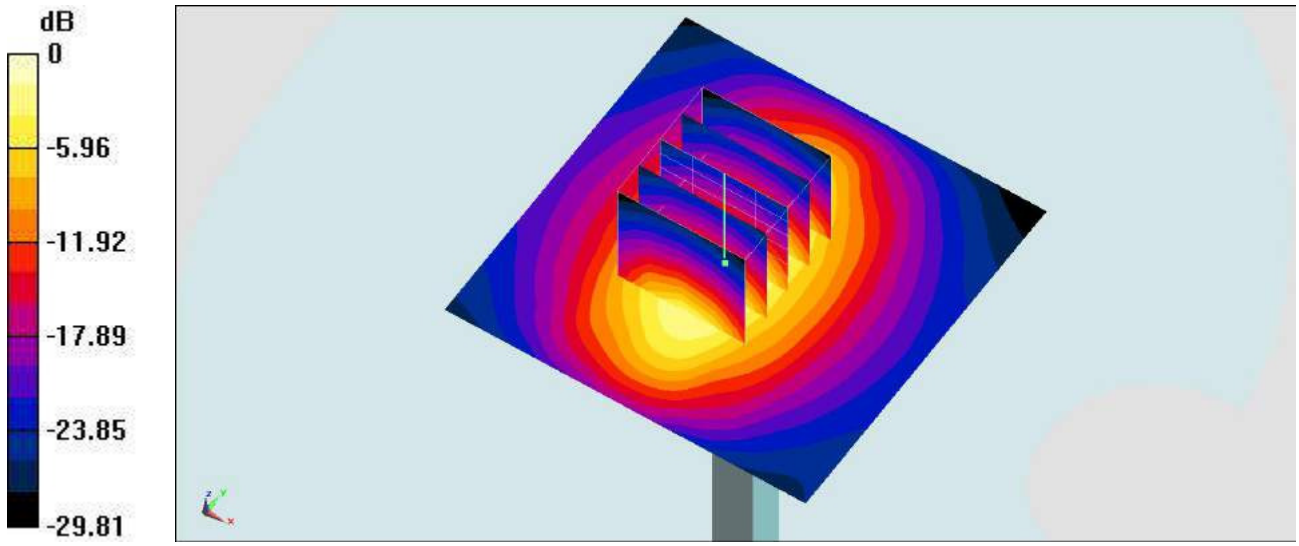

0 dB = 17.0 W/kg = 12.30 dBW/kg

System Check_Head_1900MHz_160402

DUT: D1900V2-5d041

Communication System: CW; Frequency: 1900 MHz;Duty Cycle: 1:1
Medium: HSL_1900_160402 Medium parameters used: f = 1900 MHz; σ = 1.416 S/m; ε_r = 38.486; ρ = 1000 kg/m^3
Ambient Temperature：23.3 ℃; Liquid Temperature：22.3 ℃

DASY5 Configuration:
- Probe: EX3DV4 - SN3955; ConvF(8.32, 8.32, 8.32); Calibrated: 2015/11/24;
- Sensor-Surface: 1.4mm (Mechanical Surface Detection)
- Electronics: DAE4 Sn1399; Calibrated: 2015/11/23
- Phantom: SAM-Right; Type: SAM; Serial: 1795
- Measurement SW: DASY52, Version 52.8 (8);SEMCAD X Version 14.6.10 (7331)

Configuration/Pin=250mW/Area Scan (61x61x1): Interpolated grid: dx=1.500 mm, dy=1.500 mm
Maximum value of SAR (interpolated) = 15.5 W/kg

Configuration/Pin=250mW/Zoom Scan (5x5x7)/Cube 0: Measurement grid: dx=8mm, dy=8mm, dz=5mm
Reference Value = 108.4 V/m; Power Drift = -0.08 dB
Peak SAR (extrapolated) = 18.5 W/kg
SAR(1 g) = 9.83 W/kg; SAR(10 g) = 5.08 W/kg
Maximum value of SAR (measured) = 15.5 W/kg

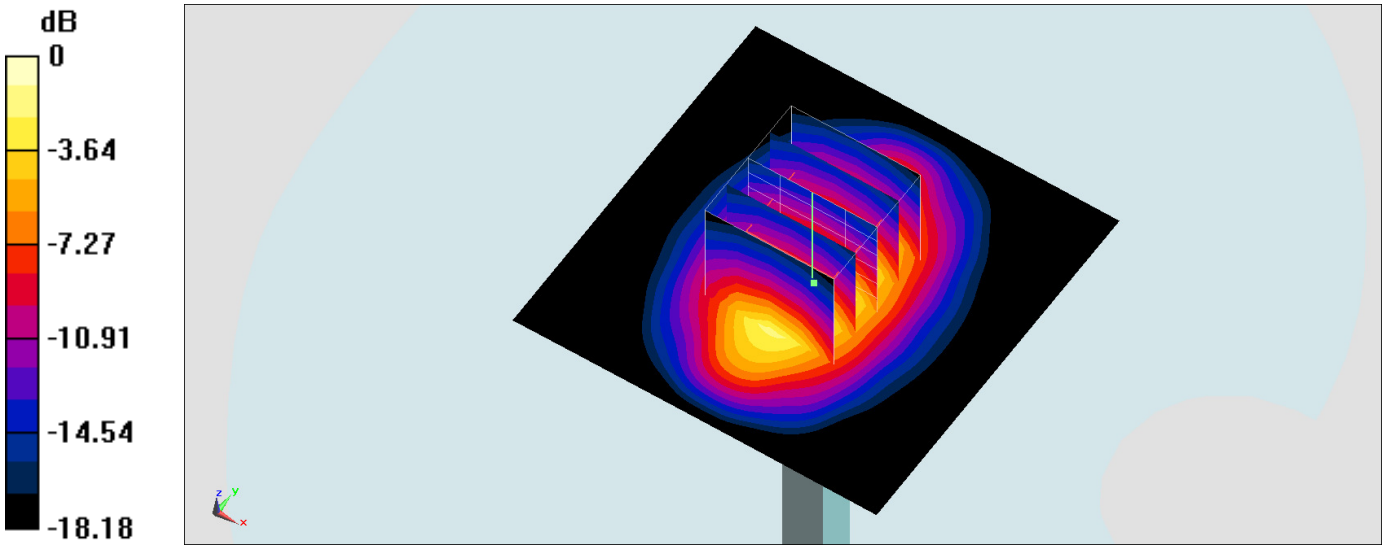

0 dB = 15.5 W/kg = 11.90 dBW/kg

System Check_Body_1900MHz_160229

DUT: D1900V2-5d041

Communication System: CW; Frequency: 1900 MHz;Duty Cycle: 1:1
Medium: MSL_1900_160229 Medium parameters used: f = 1900 MHz; σ = 1.551 S/m; ε_r = 54.901; ρ = 1000 kg/m^3
Ambient Temperature：23.5 ℃； Liquid Temperature：22.5 ℃

DASY5 Configuration
- Probe: EX3DV4 - SN3931; ConvF(7.94, 7.94, 7.94); Calibrated: 2015/10/1;
- Sensor-Surface: 1.4mm (Mechanical Surface Detection)
- Electronics: DAE3 Sn577; Calibrated: 2015/9/24
- Phantom: SAM LEFT; Type: QD000P40CD; Serial: TP:1718
- Measurement SW: DASY52, Version 52.8 (8); SEMCAD X Version 14.6.10 (7331)

Configuration/Pin=250mW/Area Scan (61x61x1): Interpolated grid: dx=1.500 mm, dy=1.500 mm
Maximum value of SAR (interpolated) = 15.9 W/kg

Configuration/Pin=250mW/Zoom Scan (5x5x7)/Cube 0: Measurement grid: dx=8mm, dy=8mm, dz=5mm
Reference Value = 104.9 V/m; Power Drift = -0.05 dB
Peak SAR (extrapolated) = 18.4 W/kg
SAR(1 g) = 10.4 W/kg; SAR(10 g) = 5.44 W/kg
Maximum value of SAR (measured) = 15.7 W/kg

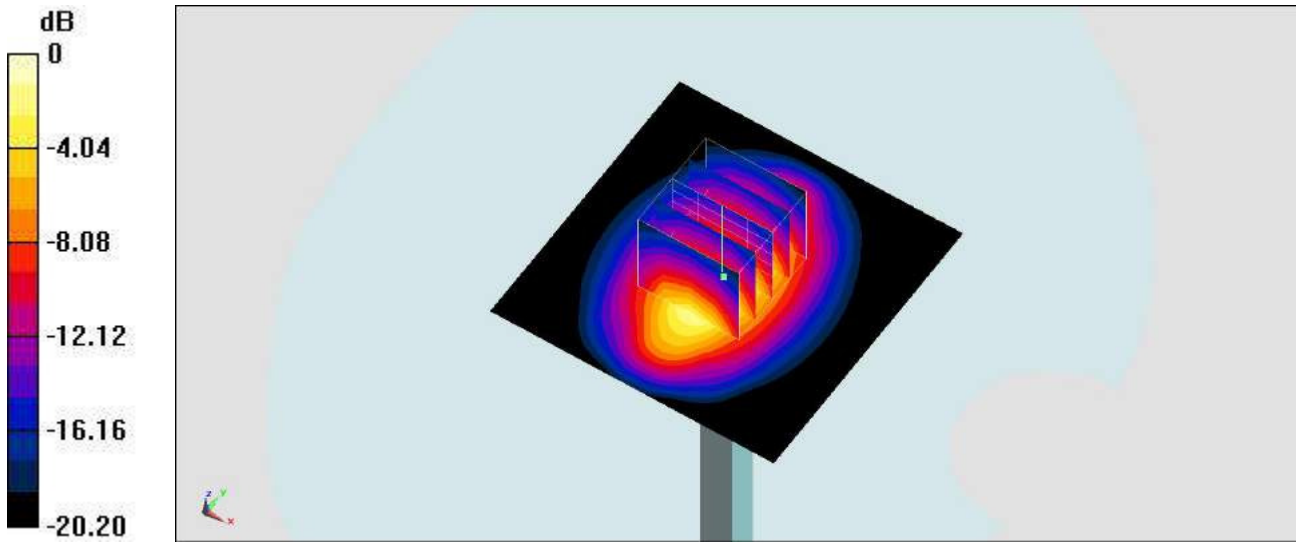

0 dB = 15.9 W/kg = 12.01 dBW/kg

System Check_Body_1900MHz_160402

DUT: D1900V2-5d041

Communication System: CW; Frequency: 1900 MHz;Duty Cycle: 1:1
Medium: MSL_1900_160402 Medium parameters used: f = 1900 MHz; σ = 1.535 S/m; ε_r = 55.27; ρ = 1000 kg/m^3
Ambient Temperature：23.3 ℃; Liquid Temperature：22.3 ℃

DASY5 Configuration:
- Probe: EX3DV4 - SN3955; ConvF(7.89, 7.89, 7.89); Calibrated: 2015/11/24;
- Sensor-Surface: 1.4mm (Mechanical Surface Detection)
- Electronics: DAE4 Sn1399; Calibrated: 2015/11/23
- Phantom: SAM-Right; Type: SAM; Serial: 1795
- Measurement SW: DASY52, Version 52.8 (8);SEMCAD X Version 14.6.10 (7331)

Configuration/Pin=250mW/Area Scan (61x61x1): Interpolated grid: dx=1.500 mm, dy=1.500 mm
Maximum value of SAR (interpolated) = 15.2 W/kg

Configuration/Pin=250mW/Zoom Scan (5x5x7)/Cube 0: Measurement grid: dx=8mm, dy=8mm, dz=5mm
Reference Value = 102.6 V/m; Power Drift = 0.06 dB
Peak SAR (extrapolated) = 18.1 W/kg
SAR(1 g) = 10.1 W/kg; SAR(10 g) = 5.3 W/kg
Maximum value of SAR (measured) = 15.5 W/kg

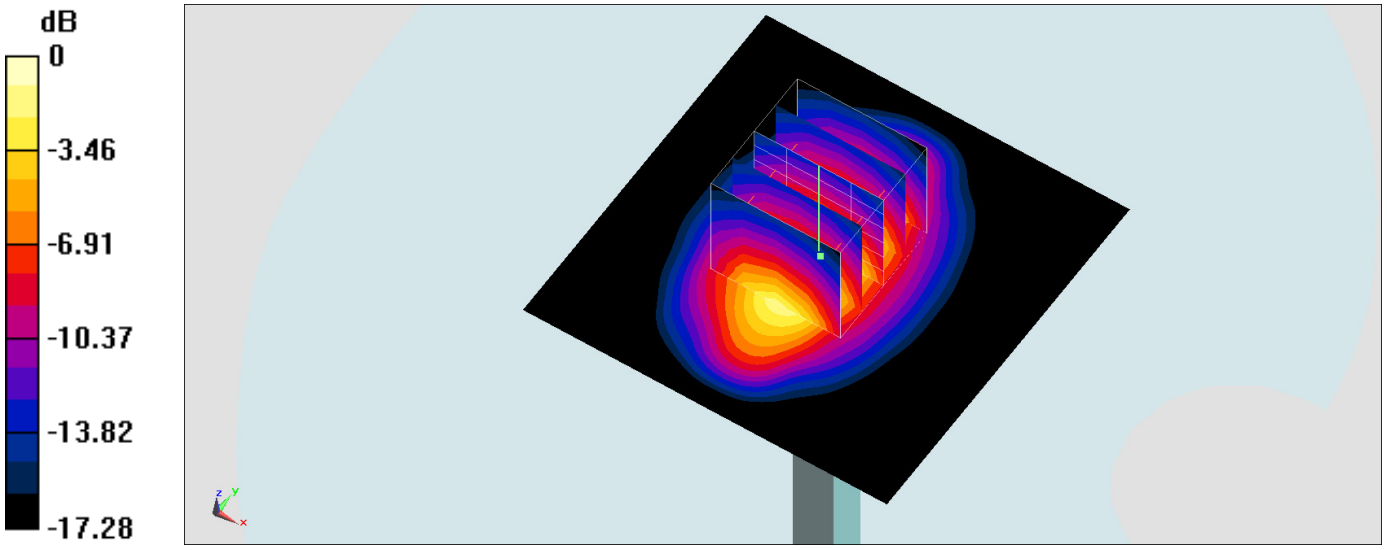

0 dB = 15.5 W/kg = 11.90 dBW/kg

System Check_Head_2450MHz_160227

DUT: D2450V2-736

Communication System: CW; Frequency: 2450 MHz;Duty Cycle: 1:1
Medium: HSL_2450_160227 Medium parameters used: f = 2450 MHz; σ = 1.856 S/m; ε_r = 40.917; ρ = 1000 kg/m^3
Ambient Temperature：23.5 ℃； Liquid Temperature：22.5 ℃

DASY5 Configuration
- Probe: EX3DV4 - SN3931; ConvF(7.51, 7.51, 7.51); Calibrated: 2015/10/1;
- Sensor-Surface: 1.4mm (Mechanical Surface Detection)
- Electronics: DAE3 Sn577; Calibrated: 2015/9/24
- Phantom: SAM_RIGHT; Type: QD000P40CD; Serial: 1719
- Measurement SW: DASY52, Version 52.8 (8); SEMCAD X Version 14.6.10 (7331)

Configuration/Pin=250mW/Area Scan (71x71x1): Interpolated grid: dx=1.200 mm, dy=1.200 mm
Maximum value of SAR (interpolated) = 18.7 W/kg

Configuration/Pin=250mW/Zoom Scan (7x7x7)/Cube 0: Measurement grid: dx=5mm, dy=5mm, dz=5mm
Reference Value = 108.9 V/m; Power Drift = 0.02 dB
Peak SAR (extrapolated) = 27.1 W/kg
SAR(1 g) = 12.5 W/kg; SAR(10 g) = 5.69 W/kg
Maximum value of SAR (measured) = 21.5 W/kg

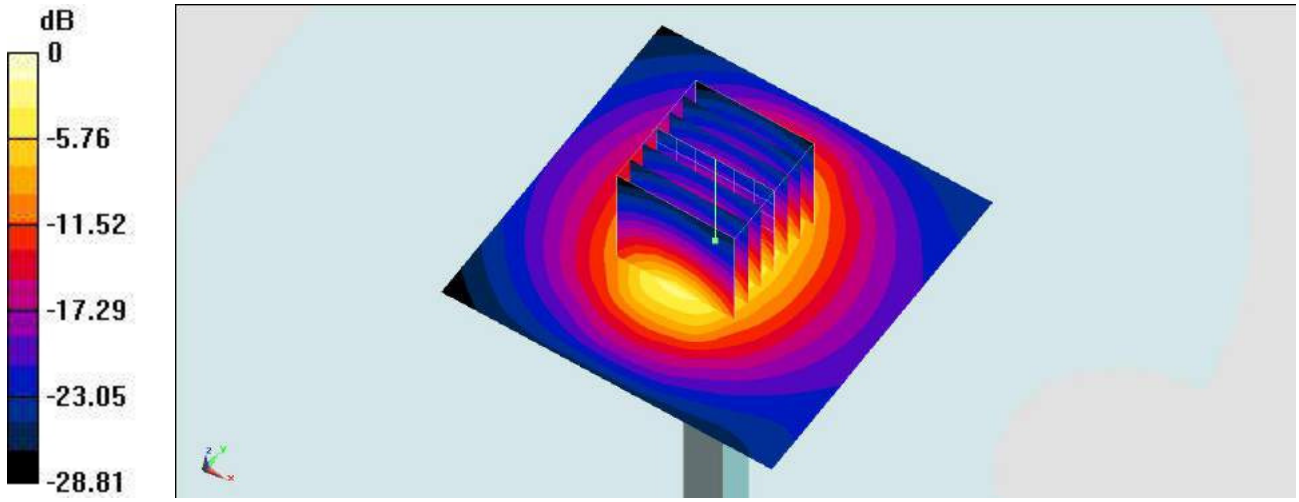

0 dB = 18.7 W/kg = 12.72 dBW/kg

Test Laboratory: Sporton International Inc. SAR/HAC Testing Lab Date: 2016/2/27

System Check_Body_2450MHz_160227

DUT: D2450V2-736

Communication System: CW ; Frequency: 2450 MHz;Duty Cycle: 1:1
Medium: MSL_2450_160227 Medium parameters used: f = 2450 MHz; σ = 2.014 S/m; ε_r = 54.752; ρ = 1000 kg/m^3
Ambient Temperature：23.5 ℃； Liquid Temperature：22.5 ℃

DASY5 Configuration
- Probe: EX3DV4 - SN3931; ConvF(7.54, 7.54, 7.54); Calibrated: 2015/10/1;
- Sensor-Surface: 1.4mm (Mechanical Surface Detection)
- Electronics: DAE3 Sn577; Calibrated: 2015/9/24
- Phantom: SAM_RIGHT; Type: QD000P40CD; Serial: 1719
- Measurement SW: DASY52, Version 52.8 (8); SEMCAD X Version 14.6.10 (7331)

Configuration/Pin=250mW/Area Scan (61x61x1): Interpolated grid: dx=1.200 mm, dy=1.200 mm
Maximum value of SAR (interpolated) = 19.2 W/kg

Configuration/Pin=250mW/Zoom Scan (7x7x7)/Cube 0: Measurement grid: dx=5mm, dy=5mm, dz=5mm
Reference Value = 96.41 V/m; Power Drift = 0.05 dB
Peak SAR (extrapolated) = 25.3 W/kg
SAR(1 g) = 12.5 W/kg; SAR(10 g) = 5.86 W/kg
Maximum value of SAR (measured) = 18.9 W/kg

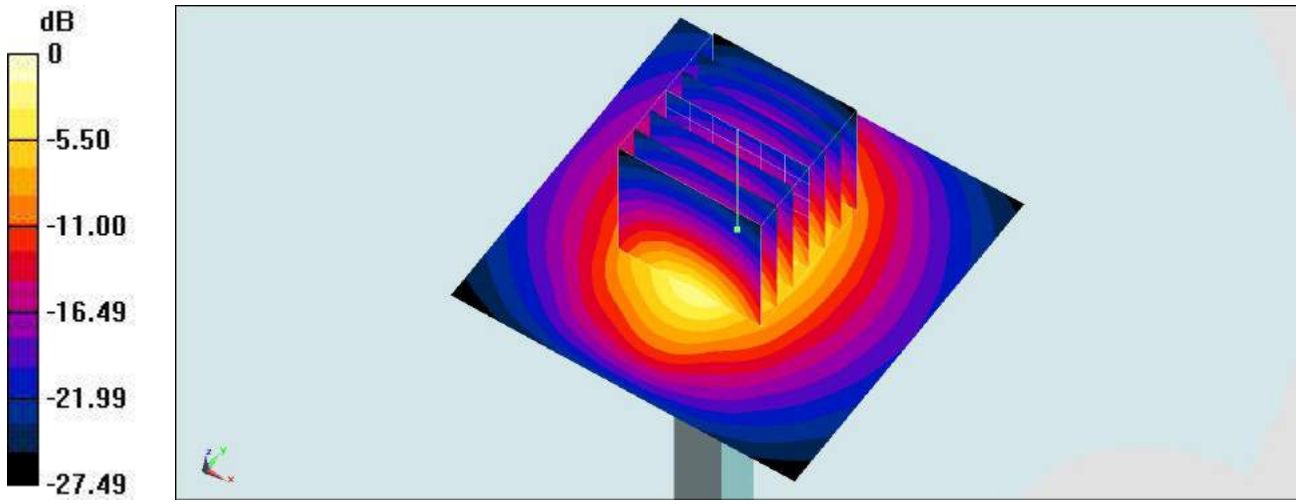

0 dB = 19.2 W/kg = 12.83 dBW/kg

System Check_Head_2600MHz_160316

DUT: D2600V2-1008

Communication System: CW ; Frequency: 2600 MHz;Duty Cycle: 1:1
Medium: HSL_2600_160316 Medium parameters used: f = 2600 MHz; σ = 1.999 S/m; ε_r = 38.127; ρ = 1000 kg/m^3
Ambient Temperature：23.4 ℃； Liquid Temperature：22.4 ℃

DASY5 Configuration
- Probe: EX3DV4 - SN3931; ConvF(7.29, 7.29, 7.29); Calibrated: 2015/10/1;
- Sensor-Surface: 1.4mm (Mechanical Surface Detection)
- Electronics: DAE3 Sn577; Calibrated: 2015/9/24
- Phantom: SAM LEFT; Type: QD000P40CD; Serial: TP:1718
- Measurement SW: DASY52, Version 52.8 (8); SEMCAD X Version 14.6.10 (7331)

Configuration/Pin=250mW/Area Scan (61x61x1): Interpolated grid: dx=1.200 mm, dy=1.200 mm
Maximum value of SAR (interpolated) = 23.3 W/kg

Configuration/Pin=250mW/Zoom Scan (7x7x7)/Cube 0: Measurement grid: dx=5mm, dy=5mm, dz=5mm
Reference Value = 111.7 V/m; Power Drift = -0.04 dB
Peak SAR (extrapolated) = 29.6 W/kg
SAR(1 g) = 13.5 W/kg; SAR(10 g) = 6.03 W/kg
Maximum value of SAR (measured) = 23.4 W/kg

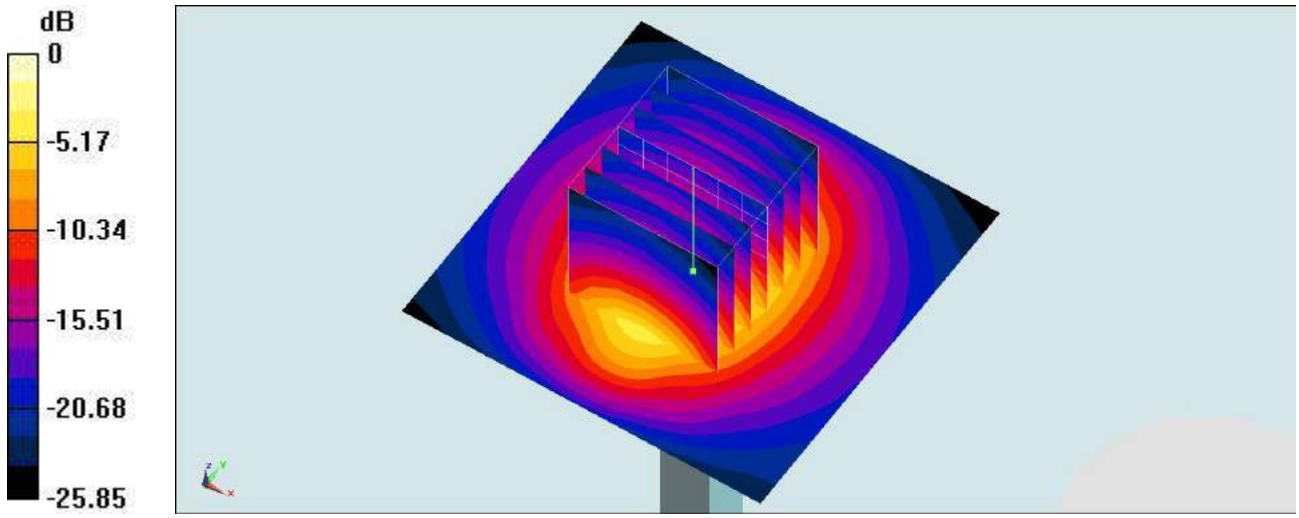

0 dB = 23.3 W/kg = 13.67 dBW/kg

System Check_Body_2600MHz_160317

DUT: D2600V2-1008

Communication System: CW ; Frequency: 2600 MHz;Duty Cycle: 1:1
Medium: MSL_2600_160317 Medium parameters used: f = 2600 MHz; σ = 2.199 S/m; ε_r = 52.56; ρ = 1000 kg/m^3
Ambient Temperature：23.3 ℃; Liquid Temperature：22.3 ℃

DASY5 Configuration
- Probe: EX3DV4 - SN3931; ConvF(7.38, 7.38, 7.38); Calibrated: 2015/10/1;
- Sensor-Surface: 1.4mm (Mechanical Surface Detection)
- Electronics: DAE3 Sn577; Calibrated: 2015/9/24
- Phantom: SAM_RIGHT; Type: QD000P40CD; Serial: 1719
- Measurement SW: DASY52, Version 52.8 (8); SEMCAD X Version 14.6.10 (7331)

Configuration/Pin=250mW/Area Scan (61x61x1): Interpolated grid: dx=1.200 mm, dy=1.200 mm
Maximum value of SAR (interpolated) = 23.4 W/kg

Configuration/Pin=250mW/Zoom Scan (7x7x7)/Cube 0: Measurement grid: dx=5mm, dy=5mm, dz=5mm
Reference Value = 103.6 V/m; Power Drift = 0.03 dB
Peak SAR (extrapolated) = 29.8 W/kg
SAR(1 g) = 13.9 W/kg; SAR(10 g) = 6.21 W/kg
Maximum value of SAR (measured) = 24.0 W/kg

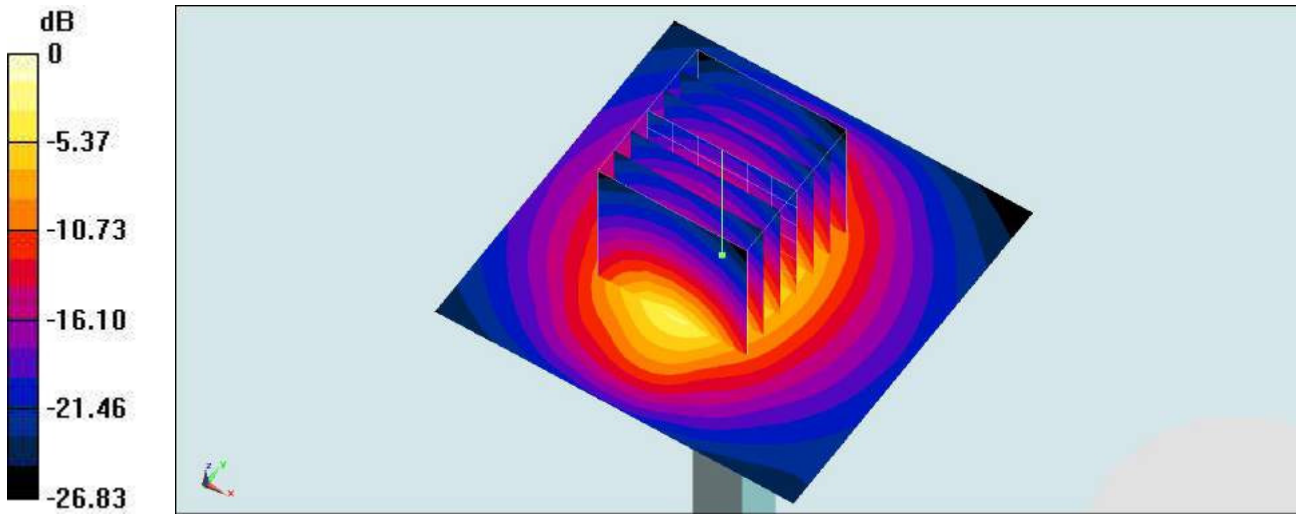

0 dB = 23.4 W/kg = 13.69 dBW/kg

System Check_Body_2600MHz_160323

DUT: D2600V2-1008

Communication System: CW ; Frequency: 2600 MHz;Duty Cycle: 1:1
Medium: MSL_2600_160323 Medium parameters used: f = 2600 MHz; σ = 2.183 S/m; ε_r = 53.88; ρ = 1000 kg/m^3
Ambient Temperature：23.4 ℃; Liquid Temperature：22.4 ℃

DASY5 Configuration:
- Probe: EX3DV4 - SN3925; ConvF(7.33, 7.33, 7.33); Calibrated: 2015/5/27;
- Sensor-Surface: 1.4mm (Mechanical Surface Detection)
- Electronics: DAE3 Sn495; Calibrated: 2015/5/22
- Phantom: SAM-Right; Type: SAM; Serial: 1795
- Measurement SW: DASY52, Version 52.8 (8);SEMCAD X Version 14.6.10 (7331)

Configuration/Pin=250mW/Area Scan (61x61x1): Interpolated grid: dx=1.200 mm, dy=1.200 mm
Maximum value of SAR (interpolated) = 24.5 W/kg

Configuration/Pin=250mW/Zoom Scan (7x7x7)/Cube 0: Measurement grid: dx=5mm, dy=5mm, dz=5mm
Reference Value = 101.2 V/m; Power Drift = -0.08 dB
Peak SAR (extrapolated) = 29.4 W/kg
SAR(1 g) = 13.4 W/kg; SAR(10 g) = 5.93 W/kg
Maximum value of SAR (measured) = 23.0 W/kg

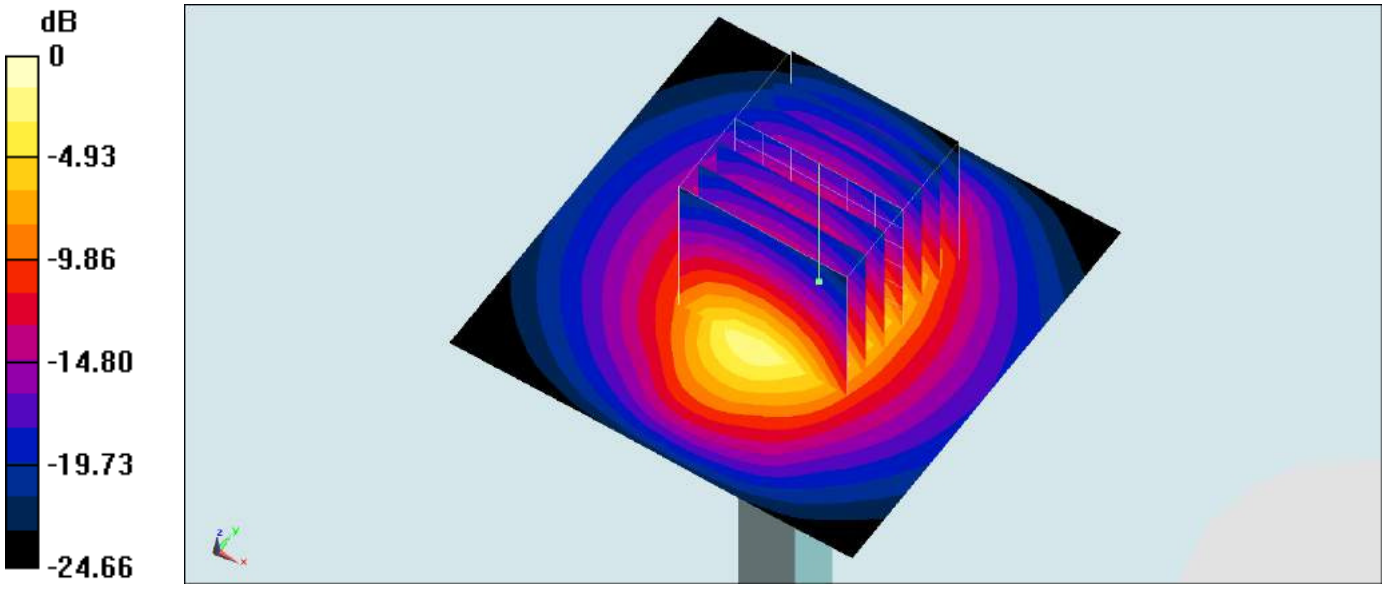

0 dB = 23.0 W/kg = 13.62 dBW/kg

System Check_Head_5250MHz_160226

DUT: D5GHzV2-1128-5250

Communication System: CW ; Frequency: 5250 MHz;Duty Cycle: 1:1
Medium: HSL_5G_160226 Medium parameters used: f = 5250 MHz; σ = 4.664 S/m; ε_r = 37.39; ρ = 1000 kg/m^3
Ambient Temperature：23.5 ℃； Liquid Temperature：22.5 ℃

DASY5 Configuration
- Probe: EX3DV4 - SN3931; ConvF(5.13, 5.13, 5.13); Calibrated: 2015/10/1;
- Sensor-Surface: 1.4mm (Mechanical Surface Detection)
- Electronics: DAE3 Sn577; Calibrated: 2015/9/24
- Phantom: SAM LEFT; Type: QD000P40CD; Serial: TP:1718
- Measurement SW: DASY52, Version 52.8 (8); SEMCAD X Version 14.6.10 (7331)

Configuration/Pin=100mW/Area Scan (71x71x1): Interpolated grid: dx=1.000 mm, dy=1.000 mm
Maximum value of SAR (interpolated) = 18.4 W/kg

Configuration/Pin=100mW/Zoom Scan (7x7x7)/Cube 0: Measurement grid: dx=4mm, dy=4mm, dz=1.4mm
Reference Value = 70.33 V/m; Power Drift = 0.11 dB
Peak SAR (extrapolated) = 33.3 W/kg
SAR(1 g) = 8.25 W/kg; SAR(10 g) = 2.32 W/kg
Maximum value of SAR (measured) = 20.1 W/kg

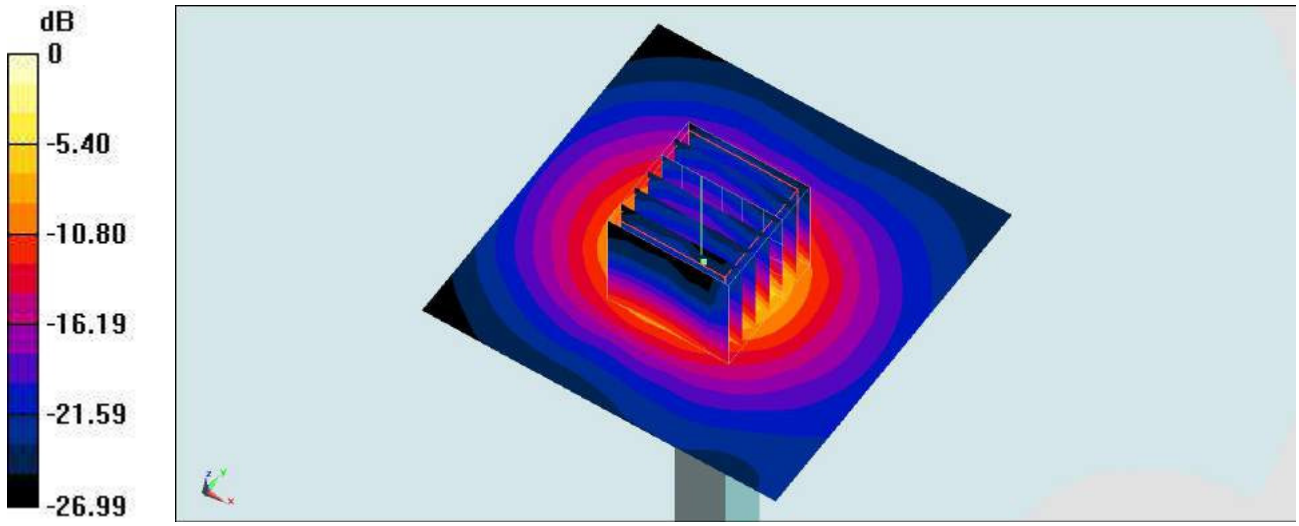

0 dB = 18.4 W/kg = 12.65 dBW/kg

System Check_Body_5250MHz_160215

DUT: D5GHzV2-1128-5250

Communication System: CW; Frequency: 5250 MHz;Duty Cycle: 1:1
Medium: MSL_5G_160215 Medium parameters used: f = 5250 MHz; σ = 5.54 S/m; ε_r = 46.925; ρ = 1000 kg/m^3
Ambient Temperature：23.4 ℃; Liquid Temperature：22.4 ℃

DASY5 Configuration:
- Probe: EX3DV4 - SN3955; ConvF(4.42, 4.42, 4.42); Calibrated: 2015/11/24;
- Sensor-Surface: 1.4mm (Mechanical Surface Detection)
- Electronics: DAE4 Sn1399; Calibrated: 2015/11/23
- Phantom: SAM-Right; Type: SAM; Serial: 1795
- Measurement SW: DASY52, Version 52.8 (8);SEMCAD X Version 14.6.10 (7331)

Configuration/Pin=100mW/Area Scan (71x71x1): Interpolated grid: dx=1.000 mm, dy=1.000 mm
Maximum value of SAR (interpolated) = 17.9 W/kg

Configuration/Pin=100mW/Zoom Scan (7x7x7)/Cube 0: Measurement grid: dx=4mm, dy=4mm, dz=1.4mm
Reference Value = 64.54 V/m; Power Drift = -0.04 dB
Peak SAR (extrapolated) = 28.2 W/kg
SAR(1 g) = 7.22 W/kg; SAR(10 g) = 2 W/kg
Maximum value of SAR (measured) = 17.6 W/kg

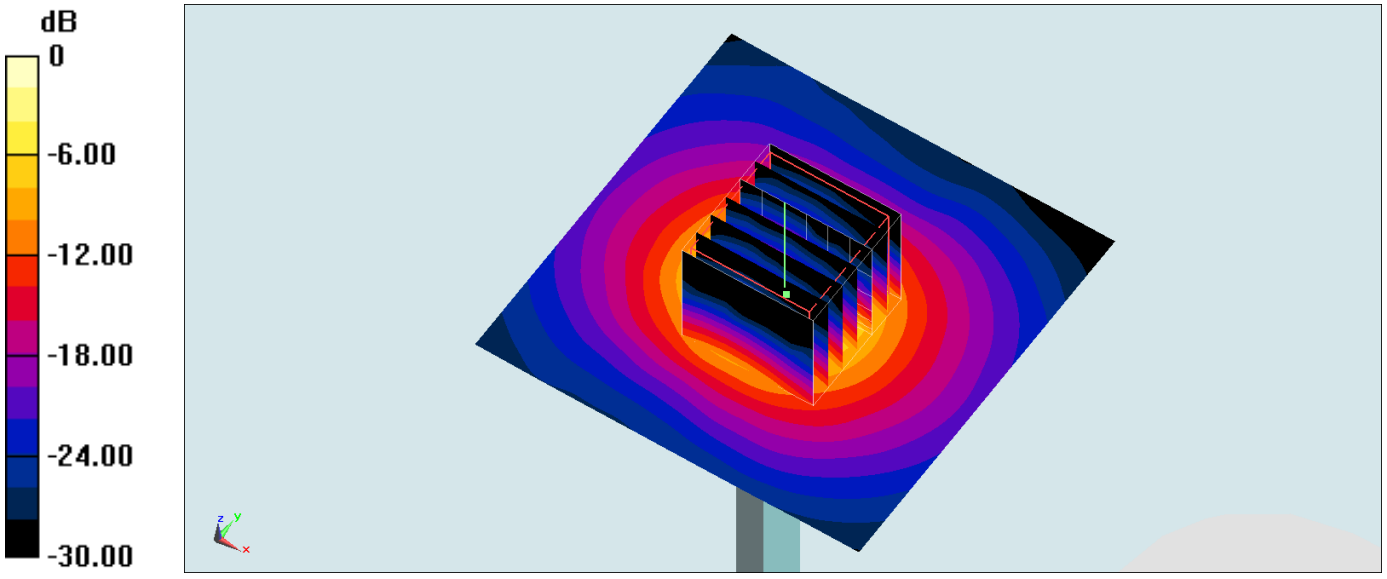

0 dB = 17.6 W/kg = 12.46 dBW/kg

System Check_Body_5250MHz_160225

DUT: D5GHzV2-1128-5250

Communication System: CW; Frequency: 5250 MHz;Duty Cycle: 1:1
Medium: MSL_5G_160225 Medium parameters used: f = 5250 MHz; σ = 5.47 S/m; ε_r = 47.005; ρ = 1000 kg/m^3
Ambient Temperature：23.5 ℃； Liquid Temperature：22.5 ℃

DASY5 Configuration
- Probe: EX3DV4 - SN3931; ConvF(4.48, 4.48, 4.48); Calibrated: 2015/10/1;
- Sensor-Surface: 1.4mm (Mechanical Surface Detection)
- Electronics: DAE3 Sn577; Calibrated: 2015/9/24
- Phantom: SAM LEFT; Type: QD000P40CD; Serial: TP:1718
- Measurement SW: DASY52, Version 52.8 (8); SEMCAD X Version 14.6.10 (7331)

Configuration/Pin=100mW/Area Scan (71x71x1): Interpolated grid: dx=1.000 mm, dy=1.000 mm
Maximum value of SAR (interpolated) = 18.8 W/kg

Configuration/Pin=100mW/Zoom Scan (7x7x7)/Cube 0: Measurement grid: dx=4mm, dy=4mm, dz=1.4mm
Reference Value = 65.41 V/m; Power Drift = 0.18 dB
Peak SAR (extrapolated) = 32.0 W/kg
SAR(1 g) = 7.89 W/kg; SAR(10 g) = 2.18 W/kg
Maximum value of SAR (measured) = 19.5 W/kg

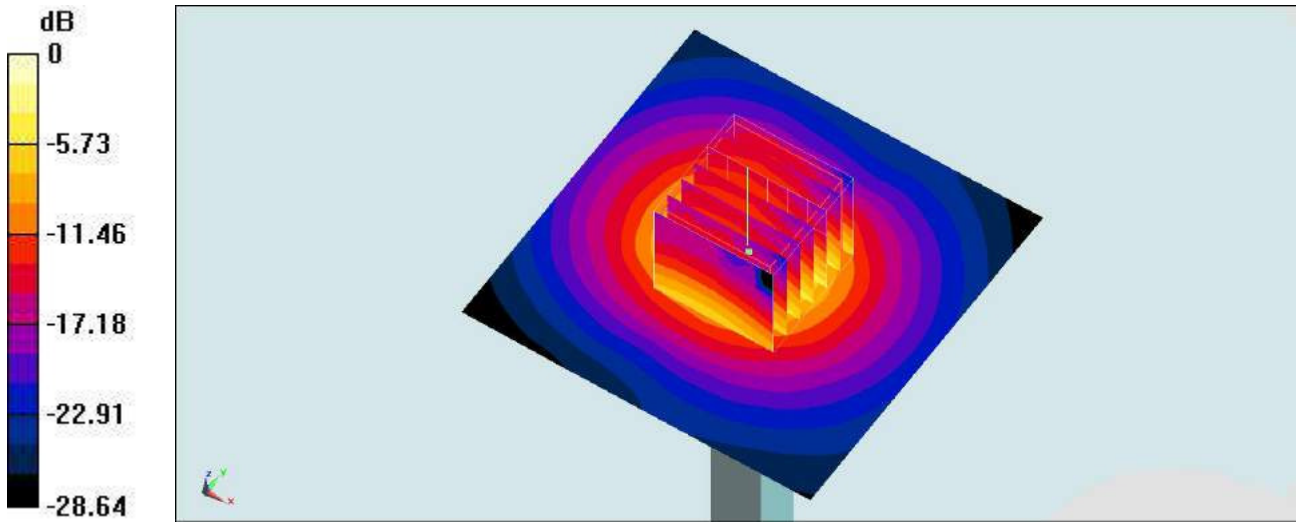

0 dB = 18.8 W/kg = 12.74 dBW/kg

System Check_Head_5600MHz_160226

DUT: D5GHzV2-1128-5600

Communication System: CW ; Frequency: 5600 MHz;Duty Cycle: 1:1
Medium: HSL_5G_160226 Medium parameters used: f = 5600 MHz; σ = 5.019 S/m; ε_r = 36.887; ρ = 1000 kg/m^3
Ambient Temperature：23.5 ℃； Liquid Temperature：22.5 ℃

DASY5 Configuration
- Probe: EX3DV4 - SN3931; ConvF(4.42, 4.42, 4.42); Calibrated: 2015/10/1;
- Sensor-Surface: 1.4mm (Mechanical Surface Detection)
- Electronics: DAE3 Sn577; Calibrated: 2015/9/24
- Phantom: SAM LEFT; Type: QD000P40CD; Serial: TP:1718
- Measurement SW: DASY52, Version 52.8 (8); SEMCAD X Version 14.6.10 (7331)

Configuration/Pin=100mW/Area Scan (71x71x1): Interpolated grid: dx=1.000 mm, dy=1.000 mm
Maximum value of SAR (interpolated) = 21.4 W/kg

Configuration/Pin=100mW/Zoom Scan (7x7x7)/Cube 0: Measurement grid: dx=4mm, dy=4mm, dz=1.4mm
Reference Value = 76.58 V/m; Power Drift = -0.19 dB
Peak SAR (extrapolated) = 36.8 W/kg
SAR(1 g) = 8.78 W/kg; SAR(10 g) = 2.44 W/kg
Maximum value of SAR (measured) = 22.0 W/kg

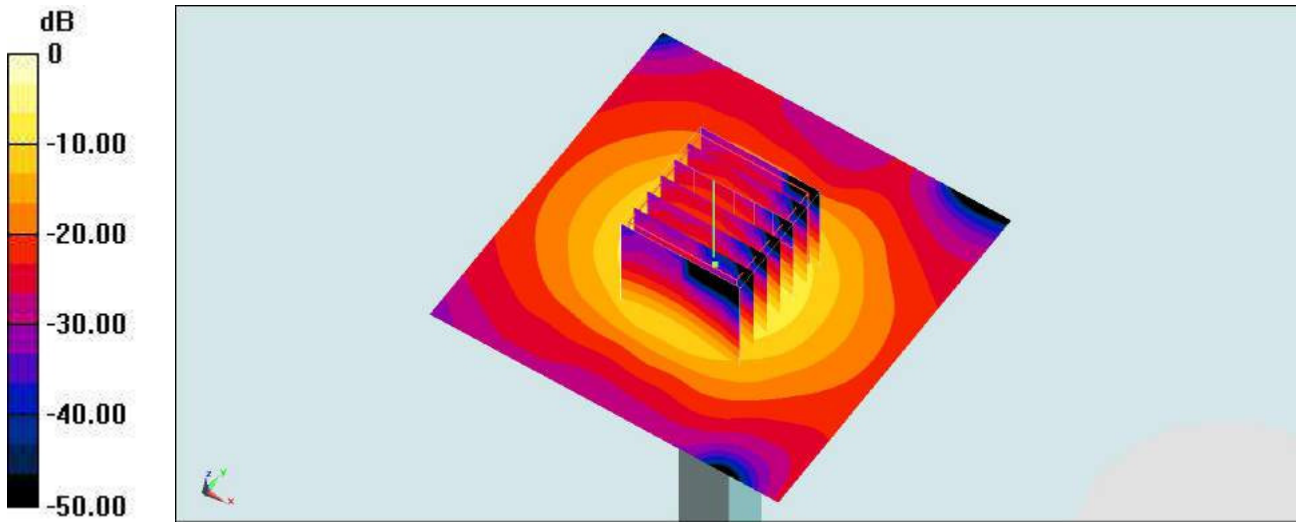

0 dB = 21.4 W/kg = 13.30 dBW/kg

System Check_Body_5600MHz_160225

DUT: D5GHzV2-1128-5600

Communication System: CW; Frequency: 5600 MHz;Duty Cycle: 1:1
Medium: MSL_5G_160225 Medium parameters used: f = 5600 MHz; σ = 5.919 S/m; ε_r = 46.428; ρ = 1000 kg/m^3
Ambient Temperature：23.5 ℃； Liquid Temperature：22.5 ℃

DASY5 Configuration
- Probe: EX3DV4 - SN3931; ConvF(3.84, 3.84, 3.84); Calibrated: 2015/10/1;
- Sensor-Surface: 1.4mm (Mechanical Surface Detection)
- Electronics: DAE3 Sn577; Calibrated: 2015/9/24
- Phantom: SAM LEFT; Type: QD000P40CD; Serial: TP:1718
- Measurement SW: DASY52, Version 52.8 (8); SEMCAD X Version 14.6.10 (7331)

Configuration/Pin=100mW/Area Scan (71x71x1): Interpolated grid: dx=1.000 mm, dy=1.000 mm
Maximum value of SAR (interpolated) = 23.3 W/kg

Configuration/Pin=100mW/Zoom Scan (7x7x7)/Cube 0: Measurement grid: dx=4mm, dy=4mm, dz=1.4mm
Reference Value = 71.92 V/m; Power Drift = -0.08 dB
Peak SAR (extrapolated) = 36.0 W/kg
SAR(1 g) = 8.27 W/kg; SAR(10 g) = 2.25 W/kg
Maximum value of SAR (measured) = 21.0 W/kg

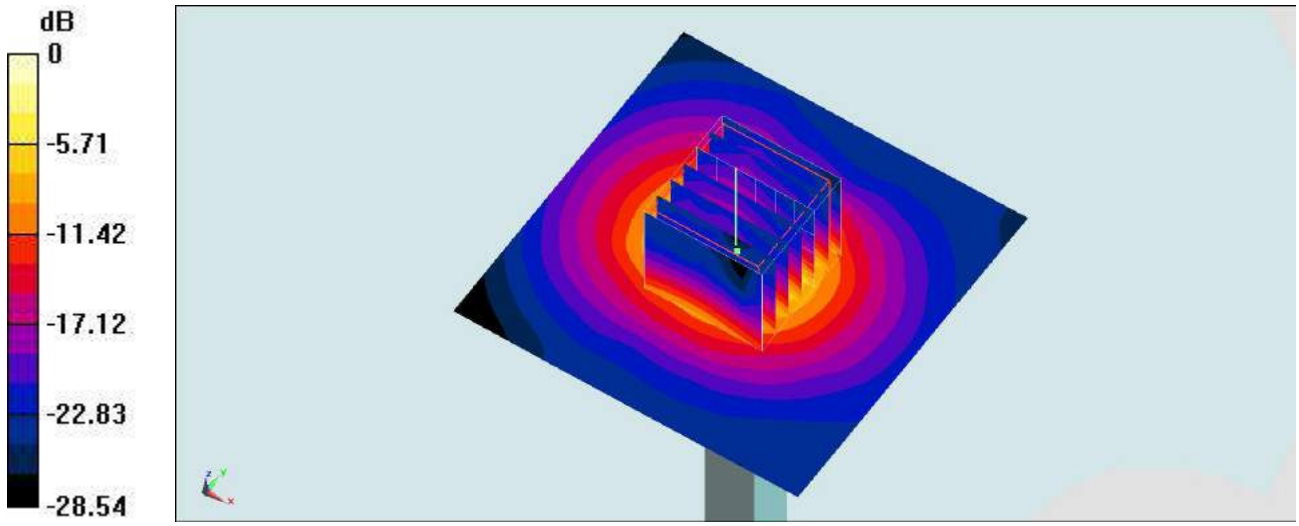

0 dB = 23.3 W/kg = 13.67 dBW/kg

System Check_Head_5750MHz_160226

DUT: D5GHzV2-1128-5750

Communication System: CW ; Frequency: 5750 MHz;Duty Cycle: 1:1
Medium: HSL_5G_160226 Medium parameters used: f = 5750 MHz; σ = 5.181 S/m; ε_r = 36.644; ρ = 1000 kg/m^3
Ambient Temperature：23.5 ℃； Liquid Temperature：22.5 ℃

DASY5 Configuration
- Probe: EX3DV4 - SN3931; ConvF(4.58, 4.58, 4.58); Calibrated: 2015/10/1;
- Sensor-Surface: 1.4mm (Mechanical Surface Detection)
- Electronics: DAE3 Sn577; Calibrated: 2015/9/24
- Phantom: SAM LEFT; Type: QD000P40CD; Serial: TP:1718
- Measurement SW: DASY52, Version 52.8 (8); SEMCAD X Version 14.6.10 (7331)

Configuration/Pin=100mW/Area Scan (71x71x1): Interpolated grid: dx=1.000 mm, dy=1.000 mm
Maximum value of SAR (interpolated) = 21.0 W/kg

Configuration/Pin=100mW/Zoom Scan (7x7x7)/Cube 0: Measurement grid: dx=4mm, dy=4mm, dz=1.4mm
Reference Value = 72.49 V/m; Power Drift = -0.02 dB
Peak SAR (extrapolated) = 36.0 W/kg
SAR(1 g) = 8.24 W/kg; SAR(10 g) = 2.29 W/kg
Maximum value of SAR (measured) = 20.9 W/kg

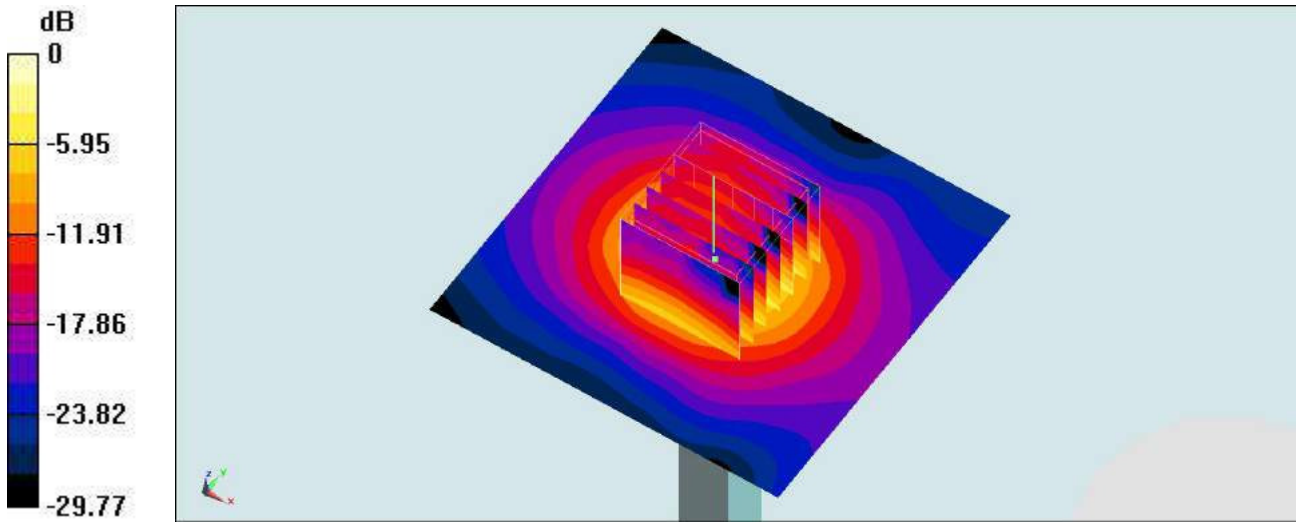

0 dB = 21.0 W/kg = 13.22 dBW/kg

System Check_Body_5750MHz_160225

DUT: D5GHzV2-1128-5750

Communication System: CW; Frequency: 5750 MHz;Duty Cycle: 1:1
Medium: MSL_5G_160225 Medium parameters used: f = 5750 MHz; σ = 6.116 S/m; ε_r = 46.246; ρ = 1000 kg/m^3
Ambient Temperature：23.5 ℃； Liquid Temperature：22.5 ℃

DASY5 Configuration
- Probe: EX3DV4 - SN3931; ConvF(3.98, 3.98, 3.98); Calibrated: 2015/10/1;
- Sensor-Surface: 1.4mm (Mechanical Surface Detection)
- Electronics: DAE3 Sn577; Calibrated: 2015/9/24
- Phantom: SAM LEFT; Type: QD000P40CD; Serial: TP:1718
- Measurement SW: DASY52, Version 52.8 (8); SEMCAD X Version 14.6.10 (7331)

Configuration/Pin=100mW/Area Scan (71x71x1): Interpolated grid: dx=1.000 mm, dy=1.000 mm
Maximum value of SAR (interpolated) = 18.4 W/kg

Configuration/Pin=100mW/Zoom Scan (7x7x7)/Cube 0: Measurement grid: dx=4mm, dy=4mm, dz=1.4mm
Reference Value = 63.15 V/m; Power Drift = 0.06 dB
Peak SAR (extrapolated) = 34.1 W/kg
SAR(1 g) = 7.5 W/kg; SAR(10 g) = 2.06 W/kg
Maximum value of SAR (measured) = 19.2 W/kg

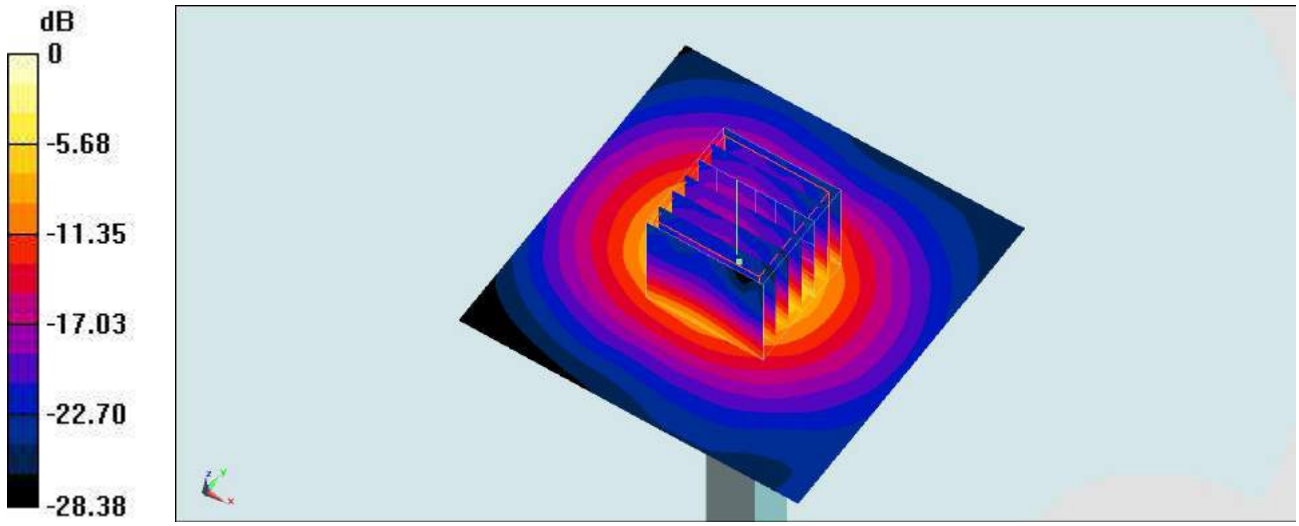

0 dB = 18.4 W/kg = 12.65 dBW/kg

System Check_Body_5750MHz_160225

DUT: D5GHzV2-1128-5750

Communication System: CW; Frequency: 5750 MHz;Duty Cycle: 1:1
Medium: MSL_5G_160225 Medium parameters used: f = 5750 MHz; σ = 6.116 S/m; ε_r = 46.246; ρ = 1000 kg/m^3
Ambient Temperature：23.5 ℃; Liquid Temperature：22.5 ℃

DASY5 Configuration:
- Probe: EX3DV4 - SN3955; ConvF(3.92, 3.92, 3.92); Calibrated: 2015/11/24;
- Sensor-Surface: 1.4mm (Mechanical Surface Detection)
- Electronics: DAE4 Sn1399; Calibrated: 2015/11/23
- Phantom: SAM-Right; Type: SAM; Serial: 1795
- Measurement SW: DASY52, Version 52.8 (8);SEMCAD X Version 14.6.10 (7331)

Configuration/Pin=100mW/Area Scan (71x71x1): Interpolated grid: dx=1.000 mm, dy=1.000 mm
Maximum value of SAR (interpolated) = 18.1 W/kg

Configuration/Pin=100mW/Zoom Scan (7x7x7)/Cube 0: Measurement grid: dx=4mm, dy=4mm, dz=1.4mm
Reference Value = 65.69 V/m; Power Drift = -0.03 dB
Peak SAR (extrapolated) = 31.6 W/kg
SAR(1 g) = 7.27 W/kg; SAR(10 g) = 2.02 W/kg
Maximum value of SAR (measured) = 18.6 W/kg

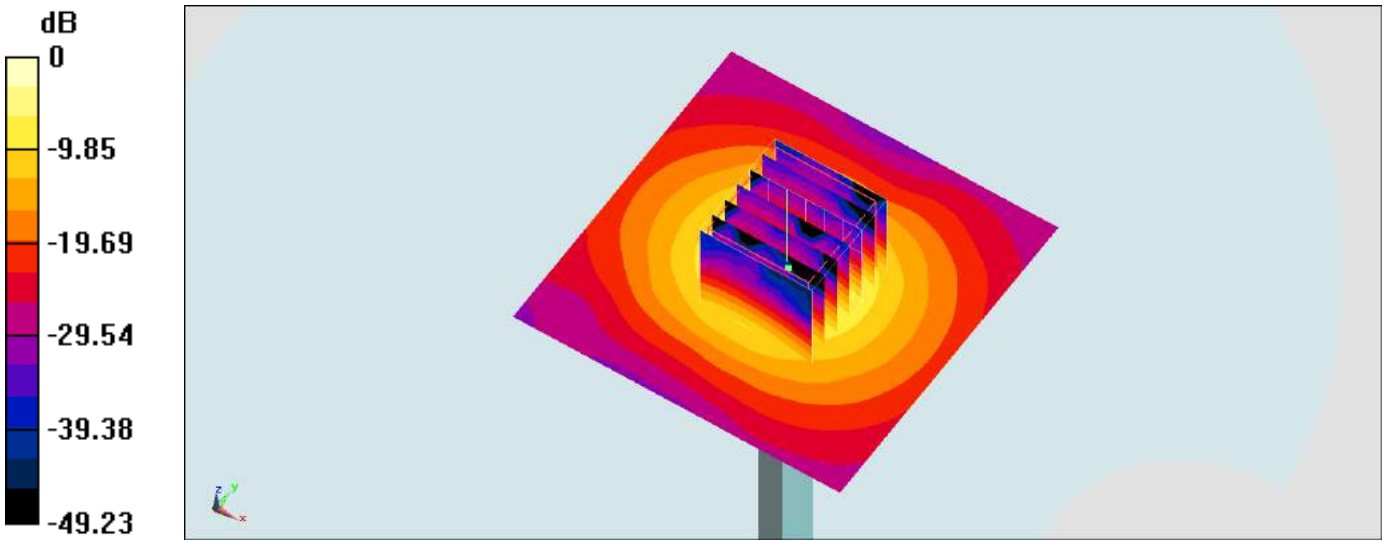

0 dB = 18.6 W/kg = 12.70 dBW/kg

T