GM28
Integrator's Manual

Sony Ericsson

SAR statement: This product is intended to be used with the antenna or other radiating element at least 20 cm away from any part of the human body.

The information contained in this document is the proprietary information of **Sony Ericsson Mobile Communications International.** The contents are confidential and any disclosure to persons other than the officers, employees, agents or subcontractors of the owner or licensee of this document, without the prior written consent of **Sony Ericsson Mobile Communications International,** is strictly prohibited. Further, no portion of this publication may be reproduced, stored in a retrieval system, or transmitted in any form or by any means, electronic or mechanical, including photocopying and recording, without the prior written consent of **Sony Ericsson Mobile Communications International,** the copyright holder.

First edition (November 2002)

Sony Ericsson Mobile Communications International publishes this manual without making any warranty as to the content contained herein. Further **Sony Ericsson Mobile Communications International** reserves the right to make modifications, additions and deletions to this manual due to typographical errors, inaccurate information, or improvements to programs and/or equipment at any time and without notice. Such changes will, nevertheless be incorporated into new editions of this manual.

All rights reserved.

© **Sony Ericsson Mobile Communications International**, 2002

Publication number: LZT 123 7468 P1A

Printed in UK

Contents

Part 1: Overview 11

1. Introduction 13

1.1 Target Users 13
1.2 Prerequisites 13
1.3 Manual Structure 13

2. GM28 Modem 14

2.1 Description 14
2.2 Highlights 14
2.3 GM28 in a Communication System 15
2.4 Main Features and Services 17
2.4.1 Types of Mobile Station 17
2.4.2 Short Message Service 17
2.4.3 Voice Calls 18
2.4.4 Data 18
2.4.5 Fax 18
2.4.6 Supplementary Services 18
2.4.7 Serial Communication 19
2.4.8 Interfacing with the GM28 19
2.5 Service and Support 20
2.6 Precautions 20

3. Abbreviations 21

Part 2: Integrating the Modem 23

1. Mechanical Description 25

1.1 Overview 25
1.2 Physical Dimensions 27

2. Electrical Description 28

2.1 Power Connector 28
2.2 Audio Connector 29
2.3 Antenna Connector 31
2.4 SIM Card Reader 32
2.5 RS232 Serial Port 33
2.5.1 Serial Data 34
2.5.2 Serial Data Signals - RD, TD 34
2.5.3 Control Signals - RTS, CTS, DTR, DSR, DCD, RI 34
2.6 Real Time Clock 35
2.7 Software Updates 35

3. Operation 36

3.1 Switching On the Modem 36
3.2 Switching Off the Modem 36
3.3 Resetting the Modem 36
3.4 Operating States/LED 37

4. Hints for Integrating the Modem 38

4.1 Safety Advice and Precautions 38
4.1.1 General 38
4.1.2 SIM Card 38
4.1.3 Antenna 39
4.2 Installation of the Modem 39
4.2.1 Where to Install the Modem 39
4.2.2 How to Install the Modem 41
4.3 Antenna 41
4.3.1 General 41
4.3.2 Antenna Type 42
4.3.3 Antenna Placement 42
4.3.4 The Antenna Cable 42
4.3.5 Possible Communication Disturbances 43
4.4 Attachments 43

5. Technical Data 44

Part 3: Using AT Commands 49

1. Introduction to AT Commands 51

1.1 Overview 51
1.2 Syntax Description 51
1.2.1 Conventions 51
1.2.2 AT Command Syntax 52
1.2.3 AT Response Syntax 53
1.3 Error Codes 55
1.3.1 +CME ERROR (Mobile Equipment Error Code) 55
1.3.2 +CMS ERROR (Message Service Failure Result Code) 56
1.4 Examples on How to Use the AT Commands 57

2. Call Control 59

2.1 AT+CPIN PIN Control 59
2.2 ATA Answer Incoming Call 59
2.3 ATD Dial 60
2.4 ATH Hang up 62
2.5 ATO Return to Online Data Mode 62
2.6 ATP Select Pulse Dialling 62
2.7 ATT Select Tone Dialling 62
2.8 ATX Call Progress Monitoring Control 63
2.9 AT+CHUP Hang up Call 63
2.10 AT+CMOD Call Mode 64
2.11 AT+CVHU Voice Hang-Up 65

2.12 AT+VTS DTMF and Tone Generation 65

3. Control and Status 67

3.1 ATQ Result Code Suppression 67
3.2 ATS0 Automatic Answer Control 67
3.3 ATS2 Escape Sequence Character 68
3.4 ATS3 Command Line Termination Character 68
3.5 ATS4 Response Formatting Character 69
3.6 ATS5 Command Line Editing Character (BACKSPACE) 70
3.7 ATS6 Blind Dial Delay Control 70
3.8 ATS7 Connection Completion Timeout 71
3.9 ATS8 Comma Dial Modifier Delay Control 71
3.10 ATS10 Automatic Disconnect Delay Control 72
3.11 AT*ECAM Ericsson Call Monitoring 72
3.12 AT*EDST Ericsson Daylight Saving Time 73
3.13 AT*EMAR Ericsson Master Reset 74
3.14 AT*EPEE Ericsson Pin Event 74
3.15 AT+CCLK Set Clock and Date 75
3.16 AT+CEER Extended Error Report 75
3.17 AT+CFUN Set Phone Functionality 76
3.18 AT+CIND Indicator Control 77
3.19 AT+CLAC List all available AT Commands 78
3.20 AT+CMEE Mobile Equipment Error 78
3.21 AT+CMER Mobile Equipment Event Reporting 79
3.22 AT+CPAS Phone Activity Status 80
3.23 AT+CPIN PIN Control 81
3.24 AT+CPWD Change Password 83
3.25 AT+CR Service Reporting Control 85
3.26 AT+CRC Cellular Result Code 85
3.27 AT+CSAS Save Settings 86
3.28 AT+CSQ Signal Strength 87
3.29 AT+CTZU Automatic Time Zone Update 88

4. Audio 89

4.1 AT*E2EAMS Ericsson M2M Audio Profile Modification 89
4.2 AT*E2APR M2M Audio Profile Manipulation 95
4.3 AT*EALR Ericsson Audio Line Request 97
4.4 AT*EAMS Ericsson Audio Mode Selection 98
4.5 AT*EARS Ericsson Audio Ring Signal 99
4.6 AT*ELAM Ericsson Local Audio Mode 100
4.7 AT*EMIC Ericsson Microphone Mode 100
4.8 AT*EMIR Ericsson Music Mute Indication Request 101
4.9 AT*EXVC Ericsson SET External Volume Control 101

5. Data - CSD/HSCSD 103

5.1 AT+CBST Select Bearer Service Type 103
5.2 AT+CRLP Radio Link Protocol 105

6. Data - GPRS 107

6.1 AT+CGACT PDP Context Activate or Deactivate 107
6.2 AT+CGATT GPRS Attach or Detach 108
6.3 AT+CGDATA Enter Data State 109
6.4 AT+CGDCONT Define PDP Context 110
6.5 AT+CGEREP GPRS Event Reporting 112
6.6 AT+CGPADDR Show PDP Address 113
6.7 AT+CGQMIN Quality of Service Profile (Minimum Acceptable) 114
6.8 AT+CGQREQ Quality of Service Profile (Requested) 116
6.9 AT+CGREG GPRS Network Registration Status 119
6.10 AT+CGSMS Select Service for MO SMS Messages 120

7. Data - HSCSD 121

7.1 AT+CHSC HSCSD Current Call Parameters 121
7.2 AT+CHSD HSCSD Device Parameters 122
7.3 AT+CHSN HSCSD Non Transparent Call Configuration 123
7.4 AT+CHSR HSCSD Parameters Report 124
7.5 AT+CHSU HSCSD Automatic User Initiated Upgrading 125

8. Fax 127

8.1 AT*E2FAX Ericsson M2M Fax Comm. Baud Rate Modification 127
8.2 Low Level Fax Commands 128

9. Identification 129

9.1 AT Attention Command 129
9.2 AT&F Set to Factory Defined Configuration 129
9.3 AT&W Store User Profile 129
9.4 AT* List all Supported AT Commands 130
9.5 AT+CGMI Read MS Manufacturer Identification 130
9.6 AT+CGMM Read MS Model Identification 130
9.7 AT+CGMR Read MS Revision Identification 131
9.8 AT+CGSN Read MS Product Serial Number Identification 131
9.9 ATI Identification Information 131
9.10 AT+GCAP Request Modem Capabilities List 132

10. Interface 133

10.1 AT+CPIN PIN Control 133
10.2 AT&C Circuit 109 (DCD) Control 133
10.3 AT&D Circuit 108 (DTR) Response 133
10.4 AT&S Circuit 107 (DSR) Response 134
10.5 AT+WS46 Mode Selection 134
10.6 ATE Command Echo 135
10.7 ATV DCE Response Format 135
10.8 ATZ Reset to Default Configuration 136
10.9 AT+CMUX Switch to 07.10 Multiplex Protocol 137
10.10 AT+CRES Restore SMS Settings 139
10.11 AT+ICF Cable Interface Character Format 139

10.12 AT+IFC DTE-DCE Local Flow Control 140
10.13 AT+ILRR Cable Interface Local Rate Reporting 141
10.14 AT+IPR Cable Interface Port Command 141
10.15 AT*E2ESC M2M Escape Sequence Guard Time 142

11. Network 143

11.1 AT*E2CD Ericsson M2M Cell Description 143
11.2 AT*E2EMM Ericsson M2M Engineering Monitoring Mode 145
11.3 AT*E2SPN M2M Service Provider Indication 151
11.4 AT*EALS Ericsson Request ALS Status 151
11.5 AT*ECSP Ericsson Customer Service Profile 152
11.6 AT*EPNR Ericsson Read SIM Preferred Network 153
11.7 AT*EPNW Ericsson Write SIM Preferred Network 154
11.8 AT*E2SSN Ericsson M2M SIM Serial Number 154
11.9 AT*ESLN Ericsson Set Line Name 155
11.10 AT+CIMI Subscriber Identification 156
11.11 AT+CLCK Facility Lock 156
11.12 AT+CNUM Subscriber Number 158
11.13 AT+COLP Connected Line Identification Presentation 159
11.14 AT+COPS Operator Selection 161
11.15 AT+CREG Network Registration 162
11.16 AT*ECPI Ciphering Indicator 163
11.17 AT*E2NBTS Ericsson M2M Neighbour BTS 165

12. Phonebook 167

12.1 AT*E2PBCS Ericsson M2M Phonebook Check Sum 167
12.2 AT*ESAG Ericsson Add to Group 167
12.3 AT*ESCG Ericsson Create Group 168
12.4 AT*ESCN Ericsson Set Credit Card Number 169
12.5 AT*ESDG Ericsson Delete Group 171
12.6 AT*ESDI Ericsson Delete Group Item 171
12.7 AT*ESGR Ericsson Group Read 172
12.8 AT*EGIR Ericsson Group Item Read 172
12.9 AT*ESNU Ericsson Settings Number 173
12.10 AT+CPBF Phonebook Find 174
12.11 AT+CPBR Phonebook Read 174
12.12 AT+CPBS Phone Storage 176
12.13 AT+CPBW Phonebook Write 177

13. Short Message Services - Point to Point 179

13.1 AT+CPIN PIN Control 179
13.2 AT+CGSMS Select Service for MO SMS Messages 179
13.3 AT+CPMS Preferred Message Storage 179
13.4 AT+CSCA Service Centre Address 181
13.5 AT+CMGF Message Format 182
13.6 AT+CMGW Write Message to Memory 182
13.7 AT+CMGS Send Message 185
13.8 AT+CMSS Send From Storage 188

13.9 AT+CMGC Send Command 189
13.10 AT+CNMI New Message Indications to TE 192
13.11 AT+CMGR Read Message..... 196
13.12 AT+CMGL List Message..... 201
13.13 AT+CMGD Delete Message 207
13.14 AT+CSDH Show Text Mode Parameters 207
13.15 AT+CSMP Set Text Mode Parameters 208
13.16 AT+CSCS Select Character Set 209
13.17 AT+CSMS Select Message Service 210

14. Short Message Services - Cell Broadcast.....213

14.1 AT+CNMI New Message Indications to TE 213
14.2 AT+CSCB Select Cell Broadcast Message Type 213

15. SIM Application Toolkit 215

15.1 AT+CPIN PIN Control 215
15.2 AT*E2STKS SIM Application Toolkit Settings 215
15.3 AT*E2STKD M2M STK Display Text 216
15.4 AT*E2STKG M2M STK Get Inkey 217
15.5 AT*E2STKI M2M STK Get Input..... 219
15.6 AT*E2STKL M2M STK Select Item 222
15.7 AT*E2STKM M2M STK Set Up Menu..... 224
15.8 AT*E2STKN M2M STK Envelope (Menu Selection) 226
15.9 AT*E2STKC M2M STK Set Up Call 226
15.10 *E2STKE STK Send Short Message..... 228
15.11 *E2STKP STK Send SS..... 229
15.12 *E2STKU STK Send USSD 230
15.13 *E2STKR STK Refresh..... 231
15.14 AT*E2STKTO SIM Application Toolkit Settings 231

16. Supplementary Services.....233

16.1 AT+CPIN PIN Control 233
16.2 AT+CACM Accumulated Call Meter 233
16.3 AT+CAMM Accumulated Call Meter Maximum..... 234
16.4 AT+CAOC Advice of Charge 235
16.5 AT+CPUC Price Per Unit and Currency Table 236
16.6 AT*EDIF Ericsson Divert Function..... 237
16.7 AT*EIPS Identity Presentation Set 238
16.8 AT*ELIN Ericsson Line Set..... 239
16.9 AT*E2SSD M2M Supplementary Service Dispatch 239
16.10 AT*E2SSI M2M Supplementary Service Indications..... 240
16.11 AT+CCFC Call Forwarding number and Conditions..... 245
16.12 AT+CCWA Call Waiting 247
16.13 AT+CHLD Call Hold and Multiparty 249
16.14 AT+CLIP Call Line Identification Presentation 250
16.15 AT+CLIR Calling Line Identification Restriction..... 251
16.16 AT+CSSN Supplementary Service Notification 253
16.17 AT+CUSD Unstructured Supplementary Service Data 255

17. Alphabetical Listing of AT Commands 259

Part 1: Overview

1. Introduction

1.1 Target Users

GM28 modems are designed to be integrated into machine-machine or man-to-machine communications applications. They are intended to be used by manufacturers, system integrators, applications developers and developers of wireless communications equipment.

1.2 Prerequisites

It is assumed that the person integrating the GM28 into an application has a basic understanding of the following:

- GSM networking;
- Wireless communication and antennas (aerials);
- AT commands;
- ITU-T standard V.24/V.28;
- Micro controllers and programming;
- Electronic hardware design.

1.3 Manual Structure

The manual is composed of four parts:

Part 1- Overview

This section provides a broad overview of the GM28 and includes a list of abbreviations used in the manual.

Part 2 - Integrating the Modem

This section describes each of the signals available on the GM28 modem, along with mechanical information. The section also provides you with design guidelines and explains what is needed to commercialise an application from a regulatory point of view.

Part 3 - Using AT Commands

This section lists all the AT commands relevant to the GM28, including their associated parameters. The purpose of part 4 is to give you detailed information about the function of each command in the AT command set.

2. GM28 Modem

2.1 Description

The dual band GSM 850/1900 MHz GM28 is a GSM/GPRS serial modem. The modem is a powerful and flexible device that can be used in a wide range of telemetry and telematics applications that rely on the remote exchange of data, voice, SMS or faxes via the GSM cellular network.

Small and lightweight, the GM28 has standard connectors and an integral SIM card reader making it easy and quick to integrate. As well as providing a standard RS232 serial communication interface the GM28 also has an audio interface allowing an analogue handset to be connected. When the GM28 is integrated into an external application, a wireless communications system is created.

A typical end-to-end system consists of a micro controller in an external application communicating, via the GM28 modem, with a remote terminal or host using the GSM network. The micro controller uses a set of AT commands to control the modem, and to set up the end-to-end communications link, via its 9-way RS232 serial interface.

GM28 serial modems are intended to be used by manufacturers, system integrators, application developers and developers of a wide range of equipment and business solutions, typically in the following fields:

- Security and alarms
- Vending
- Monitoring and control
- Utilities
- Fleet Management

2.2 Highlights

- Dual band, GSM 850/1900 MHz, GSM/GPRS serial modem
- Flexible plug-and-play device
- Data: GPRS, HSCSD, CSD, SMS
- Voice: full rate, enhanced full rate, half rate
- SMS: mobile-originated, mobile-terminated, cell broadcast
- Fax: Group 3, Classes 1 & 2
- RS232 9-way serial interface
- 5 V - 32 V d.c. input
- 4-wire audio connection
- Antenna connection (FME male)
- FCC and PTCRB approved

2.3 GM28 in a Communication System

Figure 2.1 illustrates the main blocks of a wireless communication system using the GM28. It also shows the communication principles of the system. The definitions in the figure, as used elsewhere in this manual, are in accordance with the recommendations of GSM 07.07.

- The MS (mobile station) represents the GM28 modem plus SIM card. The modem excluding SIM card, is known as the ME (mobile equipment).
- The TE (terminal equipment) is a micro-controller (i.e., a computer) and is a part of the application.

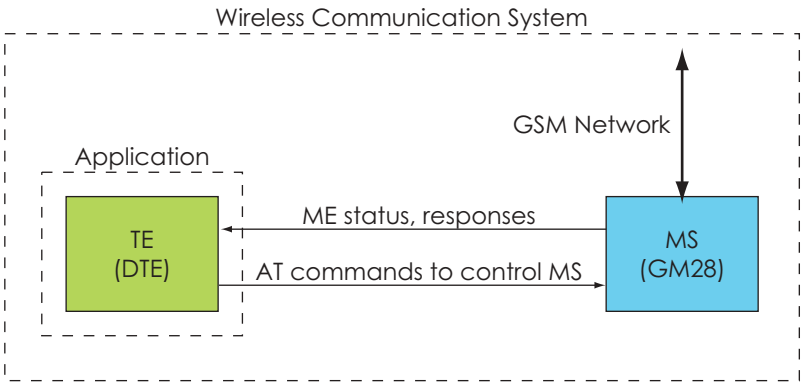

Figure 2.1 Main Blocks in a Wireless System

In accordance with the recommendations of ITU-T (International Telecommunication Union - Telecommunications Standardisation Sector) V.24, the TE communicates with the MS over a serial interface.

The functions of the GM28 follow the recommendations provided by ETSI (European Telecommunications Standards Institute) and ITU-T.

ETSI specifies a set of AT commands for controlling the GSM element of the modem; these commands are supplemented by Sony Ericsson specific commands.

To find out how to work with AT commands, see “Part 3: Using AT Commands”, page 49.

Figure 2.2 illustrates the interface between the modem and the application. The entire System Connector Interface is described in detail in "Electrical Description", page 28.

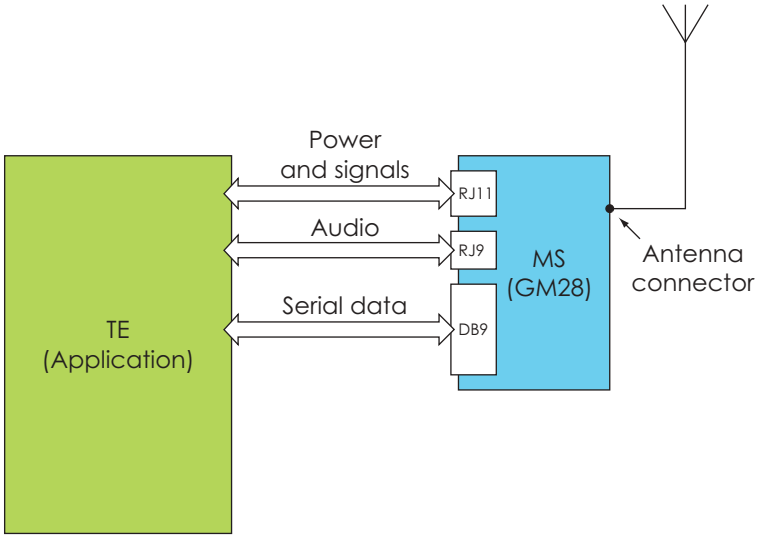

Figure 2.2 The Interface between the modem and the Application

Note! ITU-T standards define TE and TA as DTE (Data Terminal Equipment) and DCE (Data Circuit Terminating Equipment) respectively.

2.4 Main Features and Services

The modem performs a set of telecom services (TS) according to GSM standard phase 2+, ETSI and ITU-T. The services and functions of the modem are implemented by issuing AT commands over the RS232 serial interface.

2.4.1 Types of Mobile Station

The GM28 is a dual band serial modem with the GSM radio characteristics shown in the table below.

GM28	*GSM850*	*GSM1900*
Frequency Range (MHz)	TX: 824-849 RX: 869-894	TX: 1850-1910 RX: 1930-1990
Channel spacing	200kHz	200kHz
Number of channels	123 carriers *8 (TDMA) GSM: channels 128 to 251	298 carriers *8 (TDMA) PCS: channels 512 to 810
Modulation	GMSK	GMSK
TX Phase Accuracy	< 5° RMS phase error (burst)	< 5° RMS phase error (burst)
Duplex spacing	45MHz	80MHz
Receiver sensitivity at antenna connector	< –102dBm	< –102dBm
Transmitter output power at antenna connector	Class 5 0.8W (29dBm)	Class 1 1W (30dBm)
Automatic hand-over between GSM850 and GSM1900		

2.4.2 Short Message Service

The modem supports the following SMS services:

- Sending; MO (mobile-originated) with both PDU (protocol data unit) and text mode supported.
- Receiving; MT (mobile-terminated) with both PDU and text mode supported.
- CBM (cell broadcast message); a service in which a message is sent to all subscribers located in one or more specific cells in the GSM network (for example, traffic reports). This feature is network dependent.
- SMS STATUS REPORT according to GSM 03.40.
- SMS COMMAND according to GSM 03.40.

The maximum length of an SMS message is 160 characters when using 7-bit encoding. For 8-bit data, the maximum length is 140 characters. The modem supports up to 6 concatenated messages to extend this function.

2.4.3 Voice Calls

The GM28 offers the capability of mobile originated and mobile terminated voice calls, as well as supporting emergency calls. Multi-party, call waiting and call deflection features are available. Some of these features are network-operator specific.

For the inter-connection of audio, the modem offers a balanced 4-wire analogue interface.

DTMF (Dual Tone Multi Frequency) is supported.

2.4.4 Data

The modem supports the following data protocols:

- GPRS (General Packet Radio Service).
  Modems are Class B terminals, which provide simultaneous activation and attachment of GPRS and GSM services. GM28 modems are GPRS class 8 (4+1) enabled devices, which are capable of transmitting in one timeslot per frame (up link), and receiving at a maximum of four timeslots per frame (down link).
- CSD (Circuit Switched Data).
  GM28 modems are capable of establishing a CSD communication at 9.6kbps.
- HSCSD (High Speed Circuit Switched Data).
  GM28 supports HSCSD class 2 (2+1) communication, with one timeslot per frame capacity in the up link and two timeslots per frame capacity in the down link.

2.4.5 Fax

The GM28 allows fax transmissions to be sent and received by commercial software installed on the application computer. Group 3 fax Classes 1 and 2 are supported.

2.4.6 Supplementary Services

- Call forwarding
- Call hold, waiting and multiparty
- Calling/called number identification
- Advice of charge
- USSD
- Alternate line service
- Customer service profile
- Preferred networks
- Operator selection

- Network registration
- Call barring
- Call transfer

2.4.7 Serial Communication

The GM28 enables an end-to-end communication path to be established between the external telemetry/telematics application and a remote terminal or host, via the GSM network. Once a path has been set up, voice or data communication can take place. Serial data with flow control according to the RS232 signalling protocol operates between the modem and the external application.

Control of the GM28 is by the external application, via the RS232 serial interface, using a set of AT commands. The GM28 supports the full set of AT commands according to GSM 07.05 and GSM 07.07. It also supports an extended set of Ericsson proprietary AT commands to add extra functionality.

AT commands are used to operate the modem and have a broad range of functions including:

- configuring general parameters of the GM28;
- setting up and controlling communications to and from the GSM network;
- configuring the modem to communicate across the RS232 serial interface;
- and obtaining GSM network status information.

For more detail on the AT commands supported by the GM28 see “Alphabetical Listing of AT Commands”, page 259.

2.4.8 Interfacing with the GM28

The GM28 uses the following industry standard connectors to interface with the external application and the GSM network;

- RJ11 (plug-in power supply connector)
- RJ9 (handset audio connector)
- Integral SIM card reader
- FME male (antenna connector)
- Sub-D socket, 9 pin (RS232 serial port)

2.5 Service and Support

To contact customer support please use the details below:

Customer Support
Sony Ericsson Mobile Communications
Maplewood Building
Chineham Business Park
Basingstoke
RG24 8YB

E-mail: modules.support@sonyericsson.com
or
modules.info@sonyericsson.com

Information about Sony Ericsson and its products is available on the following web site:

http://www.sonyericsson.com/M2M

2.6 Precautions

The GM28 as a stand alone item is designed for indoor use only. To use outside it must be integrated into a weatherproof enclosure. Do not exceed the environmental and electrical limits as specified in "Technical Data", page 44.

3. Abbreviations

Abbreviation	*Explanations*
AMR	Adaptive Multi Rate
CBM	Cell Broadcast Message
CBS	Cell Broadcast Service
CSD	Circuit Switched Data
DCE	Data Circuit Terminating Equipment
DTE	Data Terminal Equipment
DTMF	Dual Tone Multi Frequency
EFR	Enhanced Full Rate
EMC	Electro-Magnetic Compatibility
E-OTD	Enhanced Observed Time Difference
ESD	Electrostatic Discharge
ETSI	European Telecommunication Standards Institute
FCC	Federal Communications Commission
FR	Full Rate
GPRS	General Packet Radio Service
GSM	Global System for Mobile Communication
HR	Half Rate
HSCSD	High Speed Circuit Switched Data
ITU-T	International Telecommunication Union - Telecommunications Standardisation Sector
ME	Mobile Equipment
MO	Mobile Originated
MS	Mobile Station
MT	Mobile Terminated
PDU	Protocol Data Unit
PTCRB	PCS Type Certification Review Board
RF	Radio Frequency
RLP	Radio Link Protocol
RTC	Real Time Clock
SIM	Subscriber Identity Module

Abbreviation	*Explanations*
SMS	Short Message Service
TA	Terminal Adapter
TE	Terminal Equipment
TS	Telecom Services

Part 2: Integrating the Modem

1. Mechanical Description

1.1 Overview

The pictures below show the mechanical design of the GM28 along with the positions of the different connectors and mounting holes. The GM28 case is made of durable PC/ABS plastic.

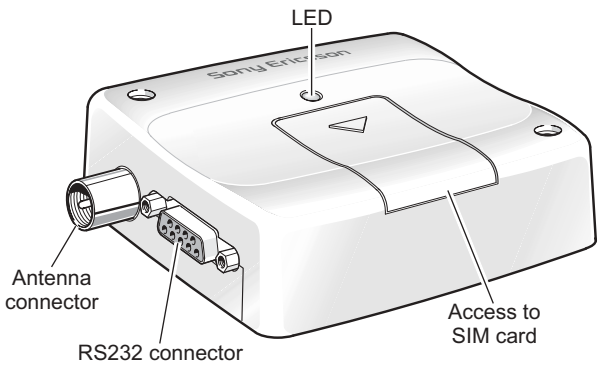

Figure 1.1 GM28 viewed from the left side

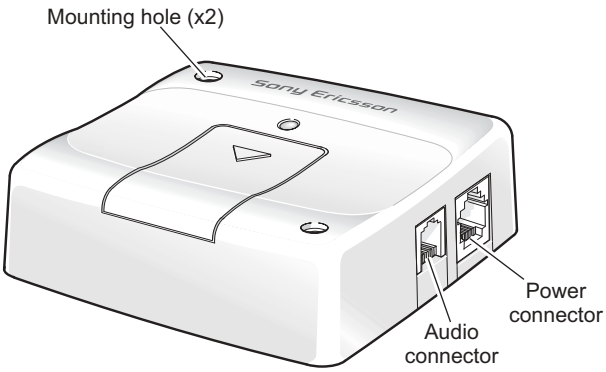

Figure 1.2 GM28 viewed from the right side

Please note the following:

- Mounting holes positioned at two of the corners make it possible to securely bolt the modem into your application.
- Keypad, display, microphone, speaker and battery are not part of the modem.
- The SIM card is mounted in the modem.
- The pins and electrical characteristics or the modem's various connectors are described in
  "2. Electrical Description", page 28.
- Information about the antenna connector is found in
  "2.3 Antenna Connector", page 31.

1.2 Physical Dimensions

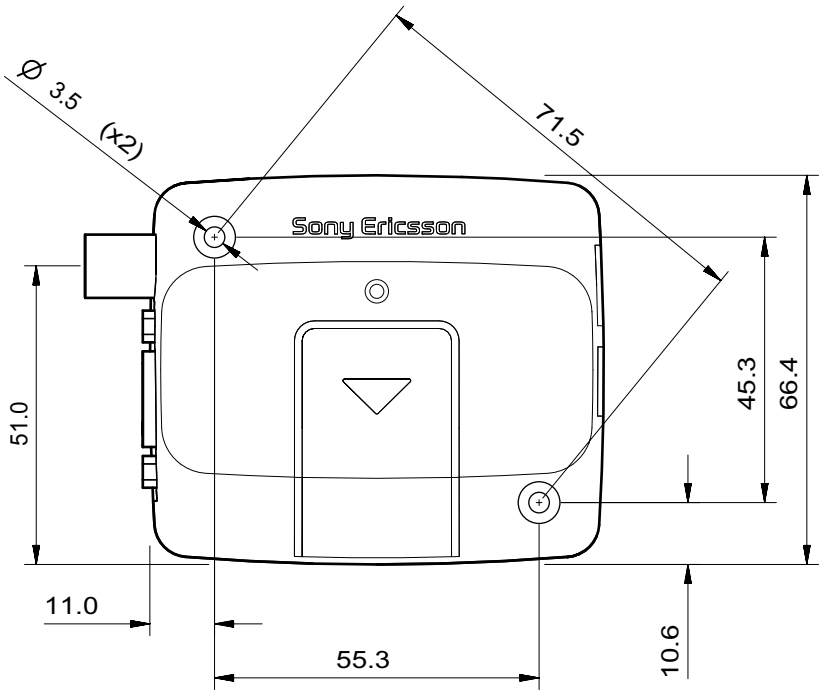

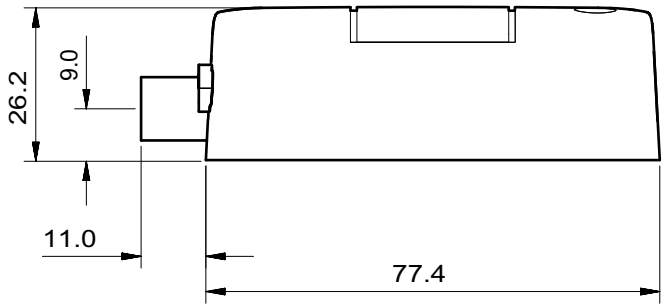

Measurements are given in millimetres. See also “Technical Data”, page 44.

2. Electrical Description

All electrical connections to the GM28 are designed to meet the standard air (4 kV) and contact (8 kV) discharge ESD tests, of EN 301 489-1.

The modem uses the following industry standard connectors:

- RJ11 6-way (power connector)
- RJ9 4-way (handset connector)
- SIM card reader
- FME male coaxial jack (antenna connector)
- Sub-D socket, 9 pin (RS232 serial port)

2.1 Power Connector

An RJ11 6-way connector, as shown and described below, serves as a means of supplying and controlling d.c. power to the modem.

The supply voltage, VCC, required by the modem is in the range 5 V - 32 V d.c. Application of the supply voltage does not switch the modem on. To do so an additional active-high control signal, TO_IN, must be applied for > 0.2 s.

A second active-high control signal, HR_IN, can be used to switch the modem off when applied for 1 - 2 seconds, or can be used to perform a hardware reset when applied for > 3.5 s.

TO_IN and HR_IN are referenced to GND (pin 6 on the connector).

VCC and GND are reverse polarity and overvoltage protected.

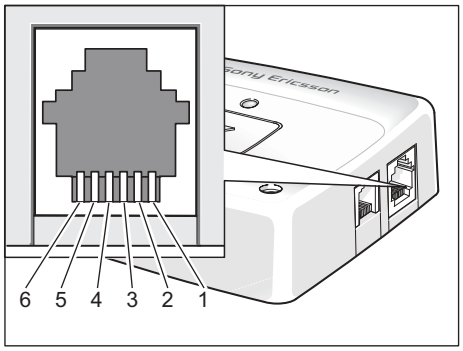

1 VCC	3 HR_IN	5 n/c
2 n/c	4 TO_IN	6 GND

The power connector electrical characteristics are listed below:

Pin	*Signal*	*Dir*	*Limits*	*Description*
1	VCC	I	5 - 32V	Positive power input
2	-	-	-	No connection
3	HR_IN	I	–0.5 - 32V	Active high control line used to switch off or reset the modem V_{IH} > 5V, V_{IL} < 2V Power off: 1s < t < 2s Hard reset: t > 3.5s
4	TO_IN	I	–0.5 - 32V	Active high control line used to switch on the modem V_{IH} > 5V, V_{IL} < 2V Power on: t > 0.2s
5	-	-	-	No connection
6	GND	I	-	Negative power (ground) input and return path for TO_IN and HR_IN

2.2 Audio Connector

A 4-way RJ9 connector, as shown below, allows a telephone handset to be plugged into the modem, giving access to the microphone and earpiece signals. The connector may also be used to drive other analogue audio sub-systems or devices.

Although the GM28 is pre-configured to work with a range of handsets, the audio interface is flexible and its performance can be configured, using AT commands, to match a particular handset or audio subsystem.

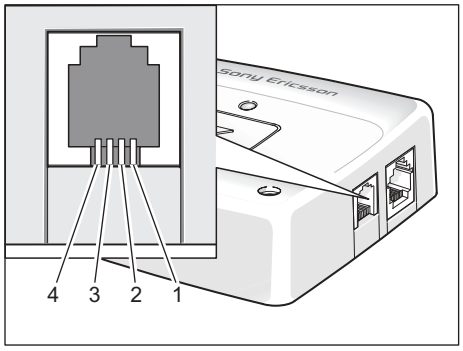

1 MICN 3 BEARP
2 BEARN 4 MICP

Audio signal descriptions are listed below:

Pin	*Signal*	*Dir*	*Description*
1	MICN	I	Microphone negative input
2	BEARN	O	Earpiece negative output
3	BEARP	O	Earpiece positive output
4	MICP	I	Microphone positive input

MICP and MICN are balanced differential microphone input signals. These inputs are compatible with an electret microphone.

BEARP and BEARN are the speaker output signals. These are differential-mode outputs. The electrical characteristics are given in the table below.

Parameter	*Limit*
Output level (differential)	Ø4.0 V_{pp}
Output level (dynamic load = 32T)	Ø2.8 V_{pp}
Distortion at 1 kHz and maximum output level	Ω5%
Offset, BEARP to BEARN	±30 mV
Ear-piece mute-switch attenuation	Ø40 dB

The following table shows the ear piece impedances that can be connected to BEARP and BEARN.

Ear piece model	*Impedance*	*Tolerance*
Dynamic ear piece	[32T#+ 800µH] // 100pF	±20%
Dynamic ear piece	[150T#+ 800µH] // 100pF	±20%
Piezo ear piece	1kT#+ 60nF	±20%

Note! Compliance with AMR may be required by certain network operators.

2.3 Antenna Connector

The antenna connector allows transmission of radio frequency (RF) signals between the modem and an external customer-supplied antenna. The modem is fitted with a 50T 3FME male coaxial jack as shown below.

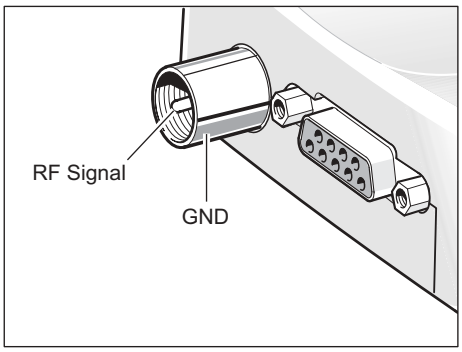

The table below shows the antenna electrical characteristics:

Parameter	*Limit*	*Description*
Nominal impedance	50T #(SWR better than 2.5:1)	
Output Power	2 Watt peak (Class 4)	GSM850
	1 Watt peak (Class 1)	GSM1900
Static Sensitivity	Better than –102dBm	GSM850
	Better than –102dBm	GSM1900

2.4 SIM Card Reader

The GM28 is fitted with a SIM card reader designed for 3 V and 5 V SIM cards. It is the flip-up type which is lockable in the horizontal position and is accessed through a removable panel as shown below.

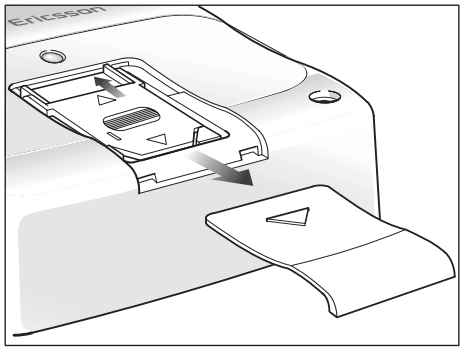

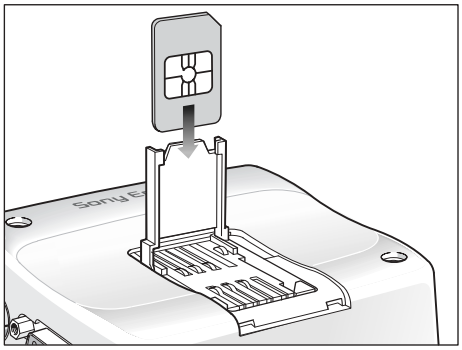

The SIM card reader includes a SIM presence switch. This ensures that when a SIM card is inserted or removed while the GM28 is turned ON, it will reset.

2.5 RS232 Serial Port

The modem supports a standard RS232 serial interface (EIA/TIA 574) via its 9 pin Sub-D connector, shown below. In line with serial communication terminology the GM28 serial modem should be considered as the *data circuit-terminating equipment* (DCE) and the external application or computer as the *data terminating equipment* (DTE).

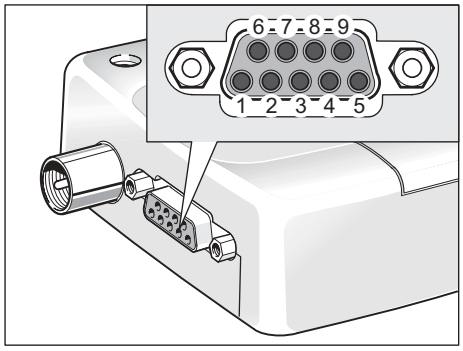

1 DCD 4 DTR 7 RTS
2 RD 5 GND 8 CTS
3 TD 6 DSR 9 RI

The electrical characteristics of the serial port signals are shown below:

Pin	*Signal*	*Dir*	*Voltage levels*	*Description*
1	DCD	O	> +4V < –4V	Data carrier detect
2	RD	O	> +4V < –4V	Received data
3	TD	I	> 2V < 0.8V	Transmitted data
4	DTR	I	> 2V < 0.8V	Data terminal ready
5	GND	-	0V	Ground connection
6	DSR	O	> +4V < –4V	Data set ready
7	RTS	I	> 2V < 0.8V	Request to send
8	CTS	O	> +4V < –4V	Clear to send
9	RI	O	> +4V < –4V	Ring indicator

2.5.1 Serial Data

The modem supports the standard data character format of 1 start bit, 8 bit data, no parity plus 1 stop bit, in total 10 bits per character.

2.5.2 Serial Data Signals - RD, TD

The default baud rate is 9.6 kbps, however higher bit rates up to 460 kbps are supported. At start-up the GM28 transmits and receives data at the default rate of 9.6 kbps in either standard AT mode or binary mode (the first received data - AT or binary format - determines the operating mode). When reprogramming, the transmission rate is automatically negotiated by the programming application. Speeds up to 460 kbps are supported.

Serial Data From Modem (RD)

RD is an output signal that the modem uses to send data to the application.

Serial Data To Modem (TD)

TD is an input signal, used by the application to send data to the modem.

2.5.3 Control Signals - RTS, CTS, DTR, DSR, DCD, RI

RTS and CTS are capable of transmitting at 1/10 th of the data transmission speed for data rates up to 460 kbps (byte-oriented flow control mechanism).

Request to Send (RTS)

Used to condition the DCE for data transmission. The default level is high by internal pull up.

The exact behaviour of RTS is defined by an AT command. Software or hardware control can be selected. Hardware flow is the default control.

The application must pull RTS low to communicate with the modem. The modem will respond by asserting CTS low, indicating it is ready for communication.

Clear To Send (CTS)

CTS indicates that the DCE is ready to transmit data. The default level is high. You can define the exact behaviour of CTS through an AT command, and can select software or hardware flow control.

Data Terminal Ready (DTR)

DTR indicates that the DTE is ready to transmit and receive data. It also acts as a hardware ‘hang-up’, terminating calls when switched high. The signal is active low. You can define the exact behaviour of DTR with an AT command.

The DTR line can also be used to switch on the modem when activated for 0.2 seconds. The DTR line must be deactivated prior to switching off the modem to ensure it switches off (powers down) correctly.

Data Set Ready (DSR)

An active DSR signal is sent from the modem to the application (DTE) to confirm that a communications path has been established. DSR has two modes of operation, which can be set using the AT command AT&S.

Data Carrier Detect (DCD)

DCD indicates that the DCE is receiving a valid carrier (data signal) when low. You can define the exact behaviour of DCD with an AT command.

Ring Indicator (RI)

RI indicates that a ringing signal is being received by the DCE when low. You can define the exact behaviour or RI with an AT command.

2.6 Real Time Clock

The GM28 contains a real time clock (RTC) to maintain accurate timekeeping and to enable “timestamping” of messages.

The RTC is powered when d.c. power is connected to the modem AND the modem is switched on. If the d.c. supply fails, a stored energy device within the GM28 provides back-up power to maintain the RTC for at least 12 hours.

2.7 Software Updates

It is possible and sometimes necessary to update the GM28 software. Updates must be carried out by a Sony Ericsson approved technician. Please contact your supplier for details (see “Service and Support”, page 20).

3. Operation

3.1 Switching On the Modem

There are two ways to switch on the modem, once power is applied.

- either assert TO_IN high for > 0.2 s;
- or activate the RS232 control line DTR, high for > 0.2 s.

The modem is fully operational after 4 seconds. Logging onto a network may take longer than this and is outside the control of the modem.

The modem can be configured to start up at the time power is applied by permanently tying power connector signals TO_IN (pin 4) and VCC (pin 1) together. In this case DTR must be used to switch the modem on again after it has been switched off or reset, while power is still applied.

3.2 Switching Off the Modem

There are two ways to switch off (power down) the modem as described below:

- either use the AT+CFUN command;
- or assert HR_IN high for 1 - 2 seconds. A delay of up to 10 s is experienced as the modem logs off the network.

Note! The DTR line must be deactivated prior to switching off the modem to ensure the unit switches off correctly.

3.3 Resetting the Modem

A full system reset, independent of the status of the software, may be applied to the modem as follows:

- assert HR_IN high for > 3.5 s.

3.4 Operating States/LED

The modem has a green LED, as depicted below, which is used to indicate various operating states. These states are described in following table.

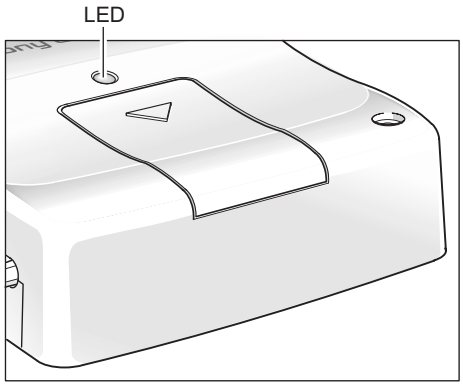

Operating State	*LED Status*
After switching on the modem	On after 4s
Switch off (Power down) or power removed	Off
Standby or talk	Flashing
No network, network search, no SIM card, no PIN entered	On

Notes! Switch off (Power Down): DC power is applied but the modem is switched OFF.

Standby: The GM28 is switched ON and camped on to the network. No call in progress.

Talk: The GM28 is switched ON and a voice/data call is in progress.

4. Hints for Integrating the Modem

This chapter gives you advice and helpful hints on how to integrate the GM28 into your application from a hardware perspective.

Please read and consider the information under the following headings before starting your integration work:

- Safety advice and precautions.
- Installation of the modem.
- Antenna.

4.1 Safety Advice and Precautions

4.1.1 General

- Always ensure that use of the modem is permitted. The modem may present a hazard if used in proximity to personal medical electronic devices. As a rule, the modem must not be used in hospitals, airports or planes.
- Avoid exposing the modem to lighted cigarettes, naked flames or to extreme hot or cold temperature.
- You are responsible for observing your country's safety standards, and where applicable the relevant wiring rules.
- Never use the modem at a gas station, refuelling point, blasting area or in any other environment where explosives may be present.
- Operating the modem close to other electronic devices, such as antennas, television sets, and radios may cause electromagnetic interference.
- Never try to dismantle the modem yourself. There are no components inside the modem that can be serviced by the user. If you attempt to dismantle the modem, you may invalidate the warranty.
- To protect power supply cables and meet the fire safety requirements when the unit is powered from a battery or a high current supply, connect a fast 1.25A fuse in line with the positive supply.
- Do not connect any incompatible component or product to the GM28. Note, Sony Ericsson does not warrant against defects, non-conformities or deviations caused thereby.

4.1.2 SIM Card

- Before handling the SIM card in your application, ensure that you are not charged with static electricity. Use proper precautions to avoid electrostatic discharges.

- When the SIM card hatch is opened, the SIM card connectors lie exposed under the SIM card holder. CAUTION: Do not touch these connectors! If you do, you may release an electrical discharge that could damage the modem or the SIM card.
- When designing your application, the SIM card's accessibility should be taken into account. We always recommend that you have the SIM card protected by a PIN code. This will ensure that the SIM card cannot be used by an unauthorized person.

4.1.3 Antenna

- If the antenna is to be mounted outside, consider the risk of lightning. Follow the instructions provided by the antenna manufacturer.
- Never connect more than one modem to a single antenna. The modem can be damaged by radio frequency energy from the transmitter of another modem.
- Like any mobile station, the antenna of the modem emits radio frequency energy. To avoid EMI (electromagnetic interference), you must determine whether the application itself, or equipment in the application's proximity, needs further protection against radio emission and the disturbances it might cause. Protection is secured either by shielding the surrounding electronics or by moving the antenna away from the electronics and the external signals cable.
- The modem and antenna may be damaged if either come into contact with ground potentials other than the one in your application. Beware, ground potential are not always what they appear to be.
- If the application containing the GM28 uses an antenna which is less than 20 cm away from any part of the user's body, integrators are legally obliged to publish SAR figures for the product. SAR testing is the responsibility of the system integrator.
- Even if SAR measurements are not required it is considered good practice to insert a warning in any manual produced, indicating it is a radio product and that care should be taken.
- The GM28 module is FCC approved for fixed and mobile applications. If the final product after integration is intended for portable use, a new application and FCC ID is required.

4.2 Installation of the Modem

4.2.1 Where to Install the Modem

There are several conditions which need to be taken into consideration when designing your application as they might affect the modem and its function. They are:

Environmental Conditions

The modem must be installed so that the environmental conditions stated in the Technical Data chapter, such as temperature, humidity and vibration are satisfied. Additionally, the electrical specifications in the Technical Data section must not be exceeded.

Signal Strength

The modem has to be placed in a way that ensures sufficient signal strength. To improve signal strength, the antenna can be moved to another position. Signal strength may depend on how close the modem is to a radio base station. You must ensure that the location at which you intend to use the modem, is within the network coverage area.

Degradation in signal strength can be the result of a disturbance from another source, for example an electronic device in the immediate vicinity. More information about possible communication disturbances can be found in section 4.3.5, page 43.

When an application is completed, you can verify signal strength by issuing the AT command AT+CSQ. See "AT+CSQ Signal Strength", page 87.

Tip! Before installing the modem, use an ordinary mobile telephone to check a possible location for it. In determining the location for the modem and antenna, you should consider signal strength as well as cable length

Connection of Components to GM28

The integrator is responsible for the final integrated system. Incorrectly designed or installed, external components may cause radiation limits to be exceeded. For instance, improperly made connections or improperly installed antennas can disturb the network and lead to malfunctions in the modem or equipment.

Network and Subscription

- Before your application is used, you must ensure that your chosen network provides the necessary telecommunication services. Contact your service provider to obtain the necessary information.
- If you intend to use SMS in the application, ensure this is included in your (voice) subscription.
- Consider the choice of the supplementary services described in section "2.4.2 Short Message Service", page 17.
- Please be aware that compliance with AMR may be required by certain network operators.

4.2.2 How to Install the Modem

Power Supply

- Use a high-quality power supply cable with low resistance. This ensures that the voltages at the connector pins are within the allowed range, even during the maximum peak current.
- When the unit is powered from a battery or a high current supply, connect a fast 1.25A fuse in line with the positive supply. This protects the power cabling and modem.

Securing the modem

- Before securing the modem take into account the amount of additional space required for the mating connectors and cables that will be used in the application.
- Where access is restricted, it may be easier to connect all the cables to the modem prior to securing it in the application.
- Securely attach the GM28 modem to the host application using two 3 mm diameter pan-head screws of appropriate length as shown below.

Caution! Do not exceed a torque of 25 Ncm when tightening the fixings screws. Excessive torque applied to the screws can crack the plastic case.

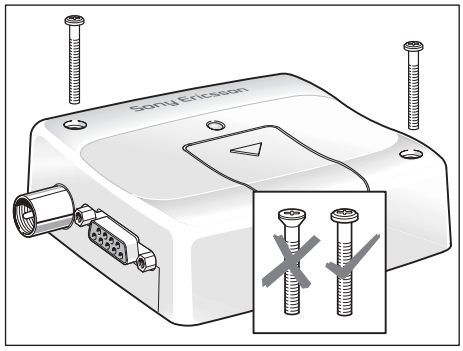

4.3 Antenna

4.3.1 General

The antenna is the component in your system that maintains the radio link between the network and the modem. Since the antenna transmits and receives electromagnetic energy, its efficient function will depend on:

- the type of antenna (for example, circular or directional);
- the placement of the antenna;

- communication disturbances in the vicinity in which the antenna operates.

In the sections below, issues concerning antenna type, antenna placement, antenna cable, and possible communication disturbances are addressed.

In any event, you should contact your local antenna manufacturer for additional information concerning antenna type, cables, connectors, antenna placement, and the surrounding area. You should also determine whether the antenna needs to be grounded or not. Your local antenna manufacturer might be able to design a special antenna suitable for your the application.

4.3.2 Antenna Type

Make sure that you choose the right type of antenna for the modem. Consider the following requirements:

- the antenna must be designed for the dual frequency bands in use: GSM850/1900;
- the impedance of the antenna and antenna cable must be 50 T;
- the antenna output-power handling must be a minimum of 2 W;
- the VSWR value should be less than 3:1 to avoid damage to the modem.

4.3.3 Antenna Placement

The antenna should be placed away from electronic devices or other antennas. The recommended minimum distance between adjacent antennas, operating in a similar radio frequency band, is at least 50 cm.

If signal strength is weak, it is useful to face a directional antenna at the closest radio base station. This can increase the strength of the signal received by the modem.

The modem's peak output power can reach 2 W. RF field strength varies with antenna type and distance. At 10 cm from the antenna the field strength may be up to 70 V/m and at 1 m it will have reduced to 7 V/m.

4.3.4 The Antenna Cable

Use 50 T #mpedance low-loss cable and high-quality 50 T #mpedance connectors (frequency range up to 2 GHz) to avoid RF losses. Ensure that the antenna cable is as short as possible.

The Voltage Standing-Wave Ratio (VSWR) may depend on the effectiveness of the antenna, cable and connectors. In addition, if you use an adapter between the antenna cable and the antenna connector, it is crucial that the antenna cable is a high-quality, low-loss cable.

Minimize the use of extension cables, connectors and adapters. Each additional cable, connector or adapter causes a loss of signal power.

4.3.5 Possible Communication Disturbances

Possible communication disturbances include the following:

- **Noise** can be caused by electronic devices and radio transmitters.
- **Path-loss** occurs as the strength of the received signal steadily decreases in proportion to the distance from the transmitter.
- **Shadowing** is a form of environmental attenuation of radio signals caused by hills, buildings, trees or even vehicles. This can be a particular problem inside buildings, especially if the walls are thick and reinforced.
- **Multi-path fading** is a sudden decrease or increase in the signal strength. This is the result of interference caused when direct and reflected signals reach the antenna simultaneously. Surfaces such as buildings, streets, vehicles, etc., can reflect signals.
- **Hand-over** occurs as you move from one cell to another in the GSM network. Your mobile application call is transferred from one cell to the next. Hand-over can briefly interfere with communication and may cause a delay, or at worst, a disruption.

4.4 Attachments

The GM28 has been FCC certified using a number of attachments including:

1. AC-DC Power Adaptor with Customized DC Lead
   (Model # AD-0901000BS)
   Input 230 Va.c., 50Hz, 2m mains lead
   Output: 9 Vd.c. 1 A, 2 m d.c. lead with RJ11 connector. CE marked.

2. Tri-band GSM Antenna (GSM/PCN/1.9GHz)
   (Model # DG300-FME/F)
   Covert fit spider patch antenna, self-adhesive pad, 0 dBi, 2 m RG174 cable with FME female connector.

3. RS232 9-way Serial Cable
   (Model # C-E-RS232-2M)
   2 m, 9-way cable, DB9 (female) to DB9 (male) connectors.

5. Technical Data

Data Features

CSD	Up to 9.6kbps
HSCSD (2+1)	Up to 19.2kbps
GPRS Class B (4+1) - P channels - Coding schemes CS1 - CS4	85.6kbps (subject to network support and terminal location)
GSM	07.10 multiplexing protocol

Short Message Service Features

SMS	Text and PDU
	Point to point (MT/MO)
	Cell broadcast
	concatenation of up to 6 SMS

Voice Features

	Full Rate, Enhanced Full Rate and Half Rate (FR/EFR/HR)
	Dual Tone Multi Frequency (DTMF
	AMR currently unsupported

Fax Features

	Group 3
	Class 1 and 2

Data Storage

SMS storage capacity	40 in ME In addition, the unit can handle as many SMS as the SIM can store
Phone book capacity	100

Power Supply

Supply voltage range	5 - 32V d.c.

Power Consumption

Supply voltage		*5V*		*12V*		*32V*		*Vdc*
Power Down Mode								
		Av	*Max*	*Av*	*Max*	*Av*	*Max*	
		5	15	5	15	20	50	µA
Standby Mode (typical)								
Frequency	*Paging rate*	*Av*	*Peak*	*Av*	*Peak*	*Av*	*Peak*	
850MHz	2	26	110	9	43	6	20	mA
1900MHz	2	26	120	9	45	6	19	mA
Talk Mode (typical)								
Frequency	*Power Level*	*Av*	*Peak*	*Av*	*Peak*	*Av*	*Peak*	
850MHz	5	220	1230	90	520	40	200	mA
1900MHz	0	170	960	70	350	30	140	mA

Notes! Power Down Mode: DC power is applied but the modem is switched OFF.

Standby Mode: The GM28 is switched ON and camped on to the network. No call in progress.

Talk Mode: The GM28 is switched ON and a voice/data call is in progress.

The power consumption during transmission in Talk Mode is measured at maximum transmitted power.

The power consumption in Standby Mode is measured at the maximum paging rate.

Radio Specifications

Frequency range	GM28: GSM 850 MHz and 1900 MHz (dual band)
Maximum RF output power	2 W (850 MHz) and 1 W (1900 MHz)
Antenna impedance	50 Ω
Static sensitivity	Better than –102 dBm
E-OTD	Currently unsupported in GM28

Audio Specifications

Parameter	*Limit*
Output level (differential)	∅4.0 V_{pp}
Output level (dynamic load = 32 Ω)	∅2.8 V_{pp}
Distortion at 1 kHz and maximum output level	Ω5%
Offset, BEARP to BEARN	±30 mV
Ear-piece mute-switch attenuation	∅40 dB

Ear piece model	*Impedance*	*Tolerance*
Dynamic ear piece	[32 Ω # 800 µH] // 100 pF	±20%
Dynamic ear piece	[150 Ω # 800 µH] // 100 pF	±20%
Piezo ear piece	1 kΩ # 60 nF	±20%

SIM Card Reader

Voltage type	Support for 3 V and 5 V SIM cards

Electrical Connectors and LED

Plug-in power supply connector	RJ11 6-way
Handset audio connector	RJ9 4-way
Antenna connector	FME male
RS232 port	Sub-D socket, 9 pin
LED	Green

Mechanical Specification

Length	77.4mm
Width	66.4mm
Height	26.2mm
Weight	<130g

Environmental specifications

Operating temperature range	–25°C to +55°C
Storage temperature range	–40°C to +85°C
Relative humidity	5 - 95%, non-condensing
Stationary vibration, sinusoidal	Displacement: 7.5mm Acceleration amplitude: 20m/s² and 40m/s² Frequency range: 2-8Hz, 8-200Hz, 200-500Hz
Stationary vibration, random	Acceleration spectral density (m²/s²): 0.96, 2.88, 0.96 Frequency range: 5-10Hz, 10-200Hz, 200-500Hz, 60min/axis
Non-stationary vibration, including shock	Shock response spectrum I, peak acceleration: 3 shocks in each axis and direction; 300m/s², 11ms Shock response spectrum II, peak acceleration: 3 shocks in each axis and direction; 1000m/s², 6ms
Bump	Acceleration: 250m/s²
Free fall transportation	1.2m
Rolling pitching transportation	Angle: ±35degrees; period: 8s
Static load	10kPa
Low air pressure/high air pressure	70kPa/106kPa

Certification

FCC Certification	Part 15
	Part 22
	Part 24
Approved to PTCRB according to NAPRD.03 and GSM 3GPP TS 51.010-1	

Part 3: Using AT Commands

1. Introduction to AT Commands

1.1 Overview

AT commands, issued from a computer in your application are used to control and implement the functions of the modem.

Using AT commands, the following actions are possible:

- Control of DCE
- GPRS
- Call control
- Supplementary Service
- SIM application tool kit

The GM28 contains a large number of Ericsson-specific commands in addition to those implemented in accordance with the GSM and ITU-T recommendations. These commands are provided to enhance the functions of the modem. The Ericsson-specific commands are identified by the asterisk that precedes the command (see the syntax description provided below).

1.2 Syntax Description

This section provides a brief description of the syntax used for the GM28, AT command set. See the ITU-T recommendation V.25ter for additional information.

1.2.1 Conventions

In this manual, the following conventions are used to explain the AT commands.

<command>	The name of the command that is to be entered.
<parameter>	The parameter values that are defined for a certain command.
<CR>	The command line is terminated by the Carriage Return (or Enter key) or ATS3 command.
<LF>	Line feed character or ATS4 command.
< >	The term enclosed in angle brackets is a syntactical element. The brackets do not appear in the command line.

[ ]	Square brackets are used to indicate that a certain item is optional. For example, sub-parameters of a command or an optional part of a response. The brackets do not appear in the command line.
Value	The default values of the supported parameters are indicated by using bold text when presenting the value.

- Other characters, including '?', '| ', parenthesis, etc., appear in commands and responses as written.
- The final result codes OK, ERROR, +CME ERROR: <err> and CMS ERROR:<err> (see sections 1.2.3, AT Response Syntax and 1.3, Error Codes) are not listed under "Possible Responses" for each AT command.
- OK and ERROR are listed if these are the only possible responses.

1.2.2 AT Command Syntax

The AT standard is a line-oriented command language. Each command is made up of the following three elements:

- the prefix;
- the body;
- the termination character.

The prefix consists of the letters "AT", which are derived from the first two letters of the word attention. The body is made up of the **command,** the **parameter,** and if applicable the associated **values**.

Commands may be combined in the same command line. Spaces between the individual bodies are ignored.

Basic Syntax Command

The format of basic syntax commands is as follows:

AT<command>[=][<parameter>]<OK>

Example! ATL=0<CR> *(sets the volume of the speaker)*

Additional commands may follow a command on the same command line without any character being required for separation. For the command D parameters, see the description for the command in question.

A version of the basic syntax is:

AT<command><parameter>

Extended Syntax Command

- **AT+<command>= [<parameter>]**

- **AT*<command>=[<parameter>]**

Example! AT+CFUN=0<CR> *(powers down the modem)*

If several values are included in the command, they are separated by commas. It is also possible to enter commands with no values.

Additional commands may follow an extended syntax command on the same command line if a semicolon (**;** IRA 3B) is inserted after the preceeding extended command as a separator.

Read Command Syntax

The read command is used to check the current values of parameters. Type '?', after the command line:

- **AT+<command>?**
- **AT*<command>?**
- **AT<command>?**

Example! AT+CSCS?<CR> *(show current character set)*

<CR>"IRA"<CR>*(information text* response)

<CR>OK<CR>*(final result code response)*

Test Command Syntax

The test command is used to test whether the command has been implemented or to give information about the type of subparameters it contains. Type '?', after the command line:

- **AT+<command>=?**
- **AT*<command>=?**

Example! AT+CPAS=?<CR> *(shows supported values for the response parameters)*

<CR>CPAS: (0, 3, 4, 129, 130, 131)<CR> *(supported values)*

<CR>OK<CR> *(final result code)*

If the indicated <parameter> is not recognized, the result code ERROR is issued.

Note! Possible responses are indicated both as <command>:(list of supported<parameter>) and (in most cases) the actual range of the parameter values.

1.2.3 AT Response Syntax

The default mode response shown below, is in text mode. See the command V for further details.

Possible formats for the result codes are:

- Basic format result code, such as OK. The Basic result code also has a numerical equivalent.
- Extended format result code, prefixed with a plus sign (+) or an asterisk (*):
  - **AT+<command>: <parameter >**
  - **AT*<command>: <parameter>**

  where the <parameter> is the result code value, note that a single space character separates the colon character from the <parameter>5# If several values are included in the result code, they are separated by commas. It is also possible that a result code has no value. The extended syntax result codes have no numerical equivalent. They are always issued in alphabetical form.
- Information text response may contain multiple lines separated by <CR>. The TE detects the end of informational text responses by looking for a final result code response, such as OK.

There are two types of result code responses as outlined below:

Final Result Code

A final result code indicates to the TE that execution of the command is completed and another command may be issued.

- If you type an implemented AT command, you should get the result code OK.
- If you type an AT command that is not implemented, or which had the wrong parameter or syntax, you will get an error result code. It is ERROR or, for example, +**<command>** ERROR followed by an error code.

Final result codes are:

Value	**General meaning**
OK	Command executed, no errors
ERROR	Invalid command or command line too long
NO DIALTONE	No dialling possible, wrong mode
BUSY	Remote station busy
NO ANSWER	Connection completion time-out
NO CARRIER	Link not established or disconnected

Unsolicited Result Code

Unsolicited result codes indicate the occurrence of an event not directly associated with a command being issued from the TE.

1.3 Error Codes

1.3.1 +CME ERROR (Mobile Equipment Error Code)

This final result code is similar to the regular ERROR result code. If +CME ERROR: <err> is the result code for any of the commands in a command line, none of the commands in the same command line will be executed (neither ERROR nor OK result code shall be returned as a result of a completed command line execution). The format of <err> can be either numerical or alphabetical, and is set with the +CMEE command.

The table below provides the numerical values for the parameter <err>.

<err>	*Description Syntax*
0	Phone failure
1	No connection to phone
2	Phone -adaptor link reserved
3	Operation not allowed
4	Operation not supported
5	PH-SIM PIN required
10	SIM not inserted
11	SIM PIN required
12	SIM PUK required
13	SIM failure
14	SIM busy
15	SIM wrong
16	Incorrect password
17	SIM PIN2 required
18	SIM PUK2 required
20	Memory full
21	Invalid index
22	Not found
23	Memory failure
24	Text string too long
25	Invalid characters in text string
26	Dial string too long
27	Invalid characters in dial string
30	No network service

<err>	*Description Syntax*
31	Network time-out
32	Network not allowed - emergency calls only
100	Unknown
101- 255	Reserved by ETS

1.3.2 +CMS ERROR (Message Service Failure Result Code)

This final result code indicates an error related to mobile equipment or to the network. The operation is similar to the ERROR result code. None of the following commands in the same command line will be executed. Neither ERROR nor OK result code will be returned. ERROR is returned normally when an error is related to syntax or invalid parameters. Nevertheless, it always appears when a command fails.

The syntax is as follows:

+CMS ERROR: <err>

Values for the <err> parameter are described in the following table.

<err>	*Description*
0 - 127	GSM 04.11 Annex E-2 values
128 - 255	GSM 03.40 subclause 9.2.3.22 values
300	ME failure
301	SMS service of ME reserved
302	Operation not allowed
303	Operation not supported
304	Invalid PDU mode parameter
305	Invalid text mode parameter
310	SIM not inserted
311	SIM PIN required
312	PH-SIM PIN required
313	SIM failure
314	SIM busy
315	SIM wrong
316	SIM PUK required
317	SIM PIN2 required
318	SIM PUK2 required
320	Memory failure

<err>	*Description*
321	Invalid memory index
322	Memory full
330	SMSC address unknown
331	No network service
332	Network time-out
340	No +CNMA acknowledgment expected
500	Unknown error
- 511	Other values in range 256 - 511 are reserved
512-	Manufacturer specific

1.4 Examples on How to Use the AT Commands

After every group of AT commands there is a section where some of the more complicated commands are exemplified. For a detailed description of the command in question (valid parameter values, AT command syntax and Response syntax) you are recommended to see its own descriptive section.

2. Call Control

2.1 AT+CPIN PIN Control

See 3.23, AT+CPIN PIN Control

2.2 ATA Answer Incoming Call

Description	*Command*	*Possible Responses*
Answer an incoming call	ATA	• CONNECT • CONNECT <text> • NO CARRIER • ERROR • OK

Answer and initiate connection to an incoming call.

<text>	*Description*
19200	Connected with data bit rate of 19200 bits/s (HSCSD)
9600	Connected with data bit rate of 9600 bits/s
4800	Connected with data bit rate of 4800 bits/s
2400	Connected with data bit rate of 2400 bits/s

2.3 ATD Dial

Description	*Command*	*Possible Responses*
• Originate a call and dial the phone number specified in the command as <dial_string> or • Do a network detect	ATD<dial_string>[;]	• CONNECT • CONNECT <text> • NO CARRIER • ERROR • NO DIAL TONE • BUSY • OK
Dial the phone number stored in the mobile phone which is located by the index <I>	ATD>ME<I>[;]	• CONNECT • CONNECT <text> • NO CARRIER • ERROR • NO DIAL TONE • BUSY • OK
Dial the phone number stored in the SIM card which is located by the index <I>	ATD>SM<I>[;]	• CONNECT • CONNECT <text> • NO CARRIER • ERROR • NO DIAL TONE • BUSY • OK
Dial the phone number stored in the *Last dialled number* list on the SIM card, which is located by the index <I> The most recently dialled number is assumed to have <I>="1"	ATD>LD<I>[;]	• CONNECT • CONNECT <text> • NO CARRIER • ERROR • NO DIAL TONE • BUSY • OK
Redial the last phone number dialled. **Ericsson specific**	ATDL[;]	...

Used to initiate a phone connection, which may be data or voice (phone number terminated by semicolon). The phone number used to establish the connection will consist of digits and modifiers, or a stored number specification.

If the dial string is followed by a semicolon this informs the phone that the number is a voice rather than a data number.

If the dial string is omitted, and the semicolon included, the command instructs the ME to do a network detect. If the network is available OK is returned.

Abortability:

Aborting an ATD command is accomplished by the transmission from the DTE to the DCE of any character. A single character shall be sufficient to abort the command in progress; however, characters

transmitted during the first 125 milliseconds after transmission of the termination character are ignored. This is to allow the DTE to append additional control characters such as line feed after the command line termination character.

<dial_string>	*Description*
"0 1 2 3 4 5 6 7 8 9 * # +"	Valid characters for origination
W	The W modifier is ignored but is included only for compatibility purposes
,	The comma modifier is ignored but is included only for compatibility purposes
T	The T modifier is ignored but is included only for compatibility purposes
P	The P modifier is ignored but is included only for compatibility purposes

<Final Result Code>	*Description*
CONNECT	If connection is successfully established, only valid for data connections
CONNECT <text>	If connection is successfully established, only valid for data connections
NO CARRIER	Unable to establish a connection or the connection attempt was aborted by the user
ERROR	An unexpected error occurred while trying to establish the connection
NO DIALTONE	The mobile phone is being used for a voice call or is not within coverage of the network
BUSY	The phone number called is engaged, valid for data and voice connections
OK	Only valid for voice connections

<text>	*Description*
19200	Connected with data bit rate of 19200 bits/s (HSCSD)
9600	Connected with data bit rate of 9600 bits/s
4800	Connected with data bit rate of 4800 bits/s
2400	Connected with data bit rate of 2400 bits/s

2.4 ATH Hang up

Description	Command	Possible Responses
Terminate the call	ATH	• ERROR • OK

Signals the MS to terminate an active call.

2.5 ATO Return to Online Data Mode

Description	Command	Possible Responses
Return to on-line data mode	ATO[<value>]	• CONNECT • CONNECT <text> • NO CARRIER • ERROR

Switch to the on-line data mode from the on-line command mode during an active call. Returns ERROR when not in on-line command mode.

<value>	Description
0	Return to on-line data state from on-line command

2.6 ATP Select Pulse Dialling

Description	Command	Possible Responses
Select pulse dialling	ATP	OK
Show if the command is supported?	ATP=?	OK

Command is ignored, and is implemented for compatibility only. It would normally cause the next D command to use pulses when dialling the number.

2.7 ATT Select Tone Dialling

Description	Command	Possible Responses
Select tone dialling	ATT	OK
Show if the command is supported?	ATT=?	OK

Command is ignored, and is implemented for compatibility only. It would normally cause the next D command to use tones when dialling the number.

2.8 ATX Call Progress Monitoring Control

Description	*Command*	*Possible Responses*
Set call progress monitoring control	ATX=[<n>] or ATX[<n>]	• OK • ERROR
Read the current setting	ATX?	X: <n>
Show if the command is supported?	ATX=?	X: (list of supported <n>s)

Defines if the dial-tone detection and busy-tone detection are to be used during a call set-up.

<n>	*Description*
0	Body and dial tone detection off. No line speed reported on connection
1	Body and dial tone detection off. Report line speed on connection
2	Busy detection on and dial tone detection off. Report line speed on connection
3	Busy detect off and dial tone on. Report line speed on connection
4	Busy detect and dial tone detection on. Report line speed on connection. **Default value**

Note! If there is no network available the <n> parameter will decide if “NO DIALTONE” or “NO CARRIER” will be returned. If the call recipient is busy, the <n> parameter will decide if “BUSY” or “NO CARRIER” will be returned.

2.9 AT+CHUP Hang up Call

Description	*Command*	*Possible Responses*
Request hang-up	AT+CHUP	• OK • ERROR
Show if the commands is supported	AT+CHUP=?	• OK • ERROR

Causes the TA to hang-up the current call of the ME.

If no call is present, but an incoming call is notified, then the incoming call shall be rejected.

2.10 AT+CMOD Call Mode

Description	*Command*	*Possible Responses*
Request Call Mode	AT+CMOD=[<mode>]	• OK • ERROR
Shows the current setting	AT+CMOD?	• +CMOD: <mode> • OK • ERROR
Show if the command is supported	AT+CMOD=?	• +CMOD: (list of supported <mode>s) • OK • ERROR

Selects the call mode of further dialing commands (D) or for next answering command (A). Mode can be either single or alternating. In this ETS, terms "alternating mode" and "alternating call" refer to all GSM bearer and teleservices that incorporate more than one basic service (voice, data, fax) within one call.

When single mode is selected the call originating and hang-up procedures are similar to procedures specified in ITU-T Recommendations V.25ter, T.31 and T.32. In GSM there can be voice followed by data (refer to GSM 02.02), alternating voice/data (refer to GSM 02.02) and alternating voice/fax calls (refer to GSM 02.03).

Test command returns values supported by the TA as a compound value.

Note! +CMOD is set to zero after a successfully completed alternating mode call. It is set to zero also after a failed answering. The power-up, factory (&F) and user resets (Z), also set the value to zero. This reduces the possibility that alternating mode calls are originated or answered accidentally.

<mode>	*Description*
0	Single mode. **Default value**. In order to avoid accidental originating or answering of alternating calls is <mode> set to single mode in following cases: - after a successfully completed alternating mode call; - after a unsuccessful answering; - after successfully execution of the commands &F and Z

2.11 AT+CVHU Voice Hang-Up

Description	*Command*	*Possible Responses*
Set Command	+CVHU=[<mode>]	• +CME ERROR: <err> • OK
Read command	+CVHU?	• +CVHU: <mode> • +CME ERROR: <err>
Test if the command is supported	+CVHU=?	+CVHU: (list of supported <mode>s)

Selects whether ATH or "drop DTR" causes a voice connection to be disconnected or not. Voice connection also includes alternating mode calls that are currently in voice mode.

Note! When <mode>=2, this command must be viewed in conjunction with the V.25ter command &D, or &D will be ignored.

<mode>	*Description*
0	"Drop DTR" ignored but OK response given. ATH disconnects
1	"Drop DTR" and ATH ignored but OK response given
2	"Drop DTR" behavior according to &D setting. ATH disconnects. **Default value**

2.12 AT+VTS DTMF and Tone Generation

Description	*Command*	*Possible Responses*
Request transmission of DTMF tone(s)	AT+VTS=<DTMF>	OK ERROR
Show if the command is supported	AT+VTS=?	OK ERROR

This command allows the transmission of DTMF tones. These tones may be used, for example, when announcing the start of a recording period. The command is write only. In this profile of commands, the command does not operate in data or fax modes of operation (+FCLASS=0,1,2-7).

Note! The ATD-command is used only for dialing. It is not possible to generate arbitrary DTMF tones using the ATD command.

Note! The AT+VTS command is used only during a voice call.

<DTMF>	*Description*
ASCII character string	An ASCII character string with entries in the set 0-9, #, *, A-D separated by commas. Each entry is interpreted as a single ASCII character. Example: The string "8,9" sends two DTMF tones, "8" followed by "9"

3. Control and Status

3.1 ATQ Result Code Suppression

Description	*Command*	*Possible Responses*
Set Result Code Suppression	ATQ[=]<value>	• OK • ERROR
Read the current setting	ATQ?	Q: <value>
Show if the command is supported	ATQ=?	Q: (list of supported <value>s)

Determines whether or not the DCE transmits result codes to the DTE. When result codes are being suppressed, no portion of any intermediate, final, or unsolicited result code - header, result text, line terminator, or trailer - is transmitted.

<value>	*Description*
0	DCE transmits result codes. **Default value**
1	Result codes are suppressed and not transmitted

3.2 ATS0 Automatic Answer Control

Description	*Command*	*Possible Responses*
Automatic answer control	ATS0=[<rcnt>]	• OK • ERROR
Read the current setting	ATS0?	<rcnt>
Show if the command is supported	ATS0=?	S0: (list of supported <rcnt>s)

Defines the automatic answering feature of the modem. A non-zero value specifies the number of rings before the call is answered.

Note! Call is always answered in the current fax class, regardless of whether the incoming call is voice, data, or fax.

<rcnt>	*Description*
0	Disable automatic answer. **Default value**
1-7	Answer after the specified number of rings

3.3 ATS2 Escape Sequence Character

Description	*Command*	*Possible Responses*
Set escape sequence character	ATS2=[<esc>]	• OK • ERROR
Read the current setting	ATS2	<esc>
Show if the command is supported	ATS2=?	S2: (list of supported <esc>s)

Defines the character to be used as the escape sequence character when switching from on-line data mode to on-line command mode. The response to the command is modified to reflect the change.

<esc>	*Description*
43	Escape sequence character. **Default value**
0 to 255	Escape sequence character

Note! If the <esc> parameter is set to a value in the range of 128-255, the escape sequence detection is disabled.

3.4 ATS3 Command Line Termination Character

Description	*Command*	*Possible Responses*
Set Command Line Termination Character	ATS3=<value>	• OK • ERROR
Read the current setting	ATS3?	<value>
Show if the command is supported	ATS3=?	S3: (list of supported <value>s)

This S-parameter represents the decimal IA5 value of the character recognised by the DCE from the DTE to terminate an incoming command line. It is also generated by the DCE as part of the header, trailer, and terminator for result codes and information text, along with the S4 parameter.

The previous value of S3 is used to determine the command line termination character for entry of the command line containing the S3 setting command. However, the result code issued uses the value of S3 as set during the processing of the command line. For example, if S3 was previously set to 13 and the command line "ATS3=30" is issued,

the command line is terminated with a <CR> character (IA5 0/13), but the result code issued uses the character with the ordinal value 30 (IA5 2/14) in place of the <CR>.

<value>	*Description*
13	Command line termination character, **Default value**
0 to 127	Command line termination character

3.5 ATS4 *Response Formatting Character*

Description	*Command*	*Possible Responses*
Set Response Formatting Character	ATS4=<value>	• OK • ERROR
Read the current setting	ATS4?	<value>
Show if the command is supported	ATS4=?	S4: (list of supported <value>s)

This S-parameter represents the decimal IA5 value of the character generated by the DCE as part of the header, trailer, and terminator for result codes and information text, along with the S3 parameter (see the description of the V parameter for usage).

If the value of S4 is changed in a command line, the result code issued in response to that command line will use the new value of S4.

<value>	*Description*
10	Formatting character. **Default value** Note: ASCII character 10 is equivalent to <LF>
0 to 127	Formatting character

3.6 ATS5 Command Line Editing Character (BACKSPACE)

Description	*Command*	*Possible Responses*
Request Command Line Editing Character	ATS5=<value>	• OK • ERROR
Shows the current setting	ATS5?	<value>
Show if the command is supported	ATS5=?	S5: (list of supported <value>s)

This S-parameter represents the decimal IA5 value of the character recognised by the DCE as a request to delete from the command line the immediately preceding character.

<value>	*Description*
8	Line editing character. **Default value**
0 to 127	Line editing character

3.7 ATS6 Blind Dial Delay Control

Description	*Command*	*Possible Responses*
Blind dial delay control	ATS6=[<dly>]	OK
Read the current setting	ATS6?	<dly>
Show if the command is supported	ATS6=?	S6: (list of supported <dly>s)

Included for compatibility. No functionality

<dly>	*Description*
2	Wait two seconds before blind dialling. **Default value**
2-255	Number of seconds to wait before blind dialling

3.8 ATS7 Connection Completion Timeout

Description	*Command*	*Possible Responses*
Set connection completion timeout	ATS7=[<tmo>]	• OK • ERROR
Read the current setting	ATS7?	<tmo>
Show if the command is supported	ATS7=?	S7: (list of supported <tmo>s)

Defines the maximum time allowed between completion of dialling and the connection being established. If this time is exceeded then the connection is aborted.

<tmo>	*Description*
50	Timeout value in seconds. **Default value**
1-255	Timeout value in seconds

3.9 ATS8 Comma Dial Modifier Delay Control

Description	*Command*	*Possible Responses*
Set Comma Dial Modifier Delay Control	ATS8=[<dly>]	• OK • ERROR
Read the current setting.	ATS8?	<dly>
Show if the command is supported.	ATS8=?	S8: (list of supported <dly>s)

Included for compatibility. No functionality

<dly>	*Description*
2	The value of the dial modifier delay in seconds. **Default value**
1-255	The value of the dial modifier delay in seconds

3.10 ATS10 Automatic Disconnect Delay Control

Description	*Command*	*Possible Responses*
Set Automatic Disconnect Delay Control	ATS10=[<val>]	• OK • ERROR
Read the current setting	ATS10?	<val>
Show if the command is supported	ATS10=?	S10: (list of supported <val>s)

Included for compatibility. No functionality

<val>	*Description*
2	Remains connected for two tenths of a second. **Default value**
1-254	Number of tenths of a second of delay

3.11 AT*ECAM Ericsson Call Monitoring

Description	*Command*	*Possible Responses*
Set Call Monitoring on or off	AT*ECAM=<onoff>	• OK • +CME ERROR: <err> • OK • ERROR
Read the current status for Call Monitoring	AT*ECAM?	• *ECAM: <onoff> • +CME ERROR: <err> • OK • ERROR
Test if the command is supported	AT*ECAM=?	• *ECAM: list of supported <onoff>s • +CME ERROR: <err> • OK • ERROR

This command activates or deactivates the call monitoring function in the ME. When this log function is activated in the ME, the ME informs about call events, such as incoming call, connected, hang up etc.

It is preferable that the current status shall always be sent with result code *ECAV when activating the log function. The purpose of this is two fold:

- to gather relevant information for the call log in a TE;

- to make it possible for the TE to display call state information for an ongoing call.

<onoff>	*Description*
0	The call log function is disabled (off). **Default value**
1	The call log function is enabled (on)

Examples

AT*ECAM?
*ECAM: 0

AT*ECAM=1
OK

3.12 AT*EDST Ericsson Daylight Saving Time

Description	*Command*	*Possible Responses*
Set Daylight Saving Time	AT*EDST=<dst>	• +CME ERROR: <err> • OK • ERROR
Read current Daylight Saving Time	AT*EDST?	• *EDST: <dst> • +CME ERROR: <err> • OK • ERROR
Show if the command is supported	AT*EDST=?	• *EDST: (list of supported <dst>s) • +CME ERROR: <err> • OK • ERROR

This command sets the daylight saving time hours.

Note! This command affects the MS clock set with the AT+CCLK command. To avoid confusion it is recommended the daylight saving time (DST) is set with this command before setting the actual local time with AT+CCLK.

<dst>	*Description*
0	Standard time
1	Daylight saving time, +1 hour
2	Daylight saving time, +2 hours

3.13 AT*EMAR Ericsson Master Reset

Description	*Command*	*Possible Responses*
Perform a master reset in the MS	AT*EMAR=<phone lock code>	• +CME ERROR: <err> • OK • ERROR
Shows if the command is supported or not	AT*EMAR=?	• +CME ERROR: <err> • OK • ERROR

This command requests the MS to reset user data. The user data in the MS will be reset to the default values. This command also unlocks the MS.

<phone lock code>	*Description*
String	Security code (phone lock code) must be verified before performing the master reset, see also AT+CLCK

3.14 AT*EPEE Ericsson Pin Event

Description	*Command*	*Possible Responses*
Requests the MS to inform when the PIN code has been inserted	AT*EPEE=<onoff>	• +CME ERROR: <err> • OK • ERROR
Test if the command is supported	AT*EPEE=?	• *EPEE: (list of supported <onoff>s) • +CME ERROR: <err> • OK • ERROR
Read the current status for PIN Code Request	AT*EPEE?	• *EPEE: <onoff> • +CME ERROR: <err> • OK • ERROR

The command requests the MS to report when the PIN code has been inserted and accepted.

<onoff>	*Description*
0	Request for report on inserted PIN code is not activated (off). **Default value**
1	Request for report on inserted PIN code is activated (on)

3.15 AT+CCLK Set Clock and Date

Description	*Command*	*Possible Responses*
Set the real time clock of the ME	AT+CCLK=<time>	• +CME ERROR: <err> • OK • ERROR
Show the current setting	AT+CCLK?	• +CCLK: <time> • +CME ERROR: <err> • OK • ERROR
Show if the command is supported	AT+CCLK=?	• OK • ERROR

Sets the real time clock of the ME. If setting fails in an ME, error +CME ERROR: <err> is returned. Read command returns the current setting of the clock.

<time>	*Description*
string type value	Format is "yy/mm/dd,hh:mm:ss±zz", where characters indicate year (two last digits), month, day, hour, minutes, seconds and time zone (indicates the difference, expressed in quarters of an hour, between the local time and GMT; range -47...+48), e.g. 6th of May 1994, 22:10:00 GMT+2 hours reads "94/05/06,22:10:00+08" NOTE: If the ME does not support time zone information then the three last characters of <time> are not returned by +CCLK?

3.16 AT+CEER Extended Error Report

Description	*Command*	*Possible Responses*
Request an Extended Error Report	AT+CEER	• +CEER: <report> • OK • ERROR
Show if the command is supported	AT+CEER=?	• OK • ERROR

Causes the TA to return one or more lines of information text <report>. Typically, the text will consist of a single line containing the failure information given by the GSM network in text format.

<report>	*Description*
characters	The total number of characters, including line terminators, in the information text shall not exceed 2041 characters. Text shall not contain the sequence 0<CR> or OK<CR>

3.17 AT+CFUN Set Phone Functionality

Description	*Command*	*Possible Responses*
Set MS functionality	AT+CFUN=<fun>	• +CME ERROR: <err> • OK
Show the current setting	AT+CFUN?	• +CFUN: <fun> • +CME ERROR: <err>
Show if the command is supported	AT+CFUN=?	• +CFUN: (list of supported <fun>s) • +CME ERROR: <err>

Selects the level of functionality <fun> in the MS.

"Full functionality" results in the highest level of power usage. It is possible to activate all parts of the modem. Default ON state.

"Minimum functionality" results in minimum power usage. The modem is in a powered OFF state. No functionality can be executed until the modem is powered back ON.

Transitions between states are defined below.

Initial State	*New State*	*Function*
<fun> = 0	-	Modem is off. No functionality
<fun> = 1	<fun> = 0	Modem was fully active. Active calls are hung up and an IMSI detach is sent. The modem then powers off

<fun>	*Description*
0	Minimum functionality. Modem is OFF
1	Full functionality. Modem is ON

3.18 AT+CIND Indicator Control

Description	*Command*	*Possible Responses*
Set Indicator Control	AT+CIND=[<ind> [,<ind>[,…]]]	• +CME ERROR: <err> • OK • ERROR
Read the current setting	AT+CIND?	• +CIND: <ind>,<ind>,… • +CME ERROR: <err> • OK • ERROR
Test if the command is supported	AT+CIND=?	• +CIND: (<descr>,(list of supported <ind>s)), (<descr>,(list of supported <ind>s)),… • +CME ERROR: <err> • OK • ERROR

Used to set the values of ME indicators. <ind> value 0 means that the indicator is off (or in state which can be identified as “off” state), 1 means that indicator is on (or in a state which is more substantial than “off” state), 2 is more substantial than 1, and so on. If the indicator is a simple on/off style element, it has values 0 and 1. The number of elements is ME specific. If the ME does not allow setting of indicators or it is not currently reachable, +CME ERROR: <err> is returned. If a certain indicator is not writable, it cannot be set. If the parameter is an empty field, the indicator will keep the previous value.

Test command returns pairs, where string value <descr> is a maximum 16 character description of the indicator and compound value is the allowed values for the indicator. If ME is not currently reachable, +CME ERROR: <err> is returned (refer to GSM 07.07).

<ind>	*Description*
Integer type	Value shall be in range of corresponding <descr>

<descr>	*Description*
“signal”	Signal quality (0-5)
“service”	Service availability (0-1)
“sounder”	Sounder activity (0-1)
“message”	Message received (0-1)
“call”	Call in progress (0-1)
“roam”	Roaming indicator (0-1)
“sms full”	A short message memory storage in the MT has become full (1), or memory locations are available (0); i.e. the range is (0-1)

3.19 AT+CLAC List all available AT Commands

Command	Possible Responses
+CLAC	<AT Command1> [<CR> <LF> <AT Command2>[…]] +CME ERROR: <err>
+CLAC=?	+CME ERROR: <err>

Causes the ME to return one or more lines of AT commands. This command has the same functionality as AT*.

Note! This command only returns the AT commands that are available to the user.

3.20 AT+CMEE Mobile Equipment Error

Description	Command	Possible Responses
Request GSM Mobile Equipment Error Control	AT+CMEE=[<n>]	• OK • ERROR
Read the command	AT+CMEE?	• +CMEE: <n> • OK • ERROR
Show if the command is supported	AT+CMEE=?	• +CMEE: (list of supported <n>s) • OK • ERROR

Disables or enables the use of result code +CME ERROR: <err> as an indication of an error relating to the functionality of the ME. When enabled, ME related errors cause +CME ERROR: <err> final result code instead of the regular ERROR final result code. ERROR is returned normally when error is related to syntax, invalid parameters, or TA functionality. For more information, refer to "+CME ERROR (Mobile Equipment Error Code)", page 55.

<n>	Description
0	Disable +CME ERROR: <err> result code and use ERROR instead. **Default value**
1	Enable +CME ERROR: <err> result code and use numeric <err> values (see page 55)
2	Enable +CME ERROR: <err> result code and use verbose <err> values (see page 55)

3.21 AT+CMER Mobile Equipment Event Reporting

Description	*Command*	*Possible Responses*
Set phone activity status	AT+CMER=[<mode> [,<ind>[,<bfr>]]]	• +CME ERROR: <err> • OK • ERROR
Read the current setting	AT+CMER?	• +CMER: <mode>,<ind>,<bfr> • OK • ERROR
Test if the command is supported	AT+CMER=?	• +CMER: (list of supported <mode>s), (list of supported <ind>s), (list of supported <bfr>s) • OK • ERROR

Enables or disables the sending of unsolicited result codes from ME to TE in the case of key pressings, display changes, and indicator state changes. <mode> controls the processing of unsolicited result codes specified within this command. <bfr> controls the effect on buffered codes when <mode> 1, 2 or 3 is entered. If the ME does not support setting, +CME ERROR: <err> is returned.

<mode>	*Description*
0	Buffer unsolicited result codes in the TA; if TA result code buffer is full, codes can be buffered in some other place or the oldest ones can be discarded
3	Forward unsolicited result codes directly to the TE; TA-TE link specific inband technique used to embed result codes and data when TA is in on-line data mode

<ind>	*Description*
0	No indicator event reporting
1	Indicator event reporting using result code +CIEV: <ind>,<value>. <ind> indicates the indicator order number (as specified for +CIND) and <value> is the new value of indicator. Only those indicator events, which are not caused by +CIND shall be indicated by the TA to the TE

<bfr>	*Description*
0	TA buffer of unsolicited result codes defined within this command is cleared when <mode> 1...3 is entered

3.22 AT+CPAS Phone Activity Status

Description	*Command*	*Possible Responses*
Execute Phone Activity Status	AT+CPAS[=<mode>]	• +CPAS: <pas> • +CME ERROR <err> • OK • ERROR
Test if the command is supported	AT+CPAS=?	• +CPAS: (list of supported <pas>s) • +CME ERROR <err> • OK • ERROR

Returns the activity status <pas> of the ME. It can be used to interrogate the ME before requesting action from the phone.

When the command is executed without the <mode> argument, the command returns <pas>-values from 0 to 128 (for supported values se table 1 below). When, on the other hand, the command is executed with the <mode> argument set to 1, the command may return Ericsson specific <pas> values from 129 to 255 (for supported values see the table below).

Test command returns values supported by the ME as a compound value: refer to GSM 07.07.

<pas>	*Description*
0	Ready (ME allows commands from TA/TE)
3	Ringing (ME is ready for commands from TA/TE, but the ringer is active)
4	Call in progress (ME is ready for commands from TA/TE, but a call is in progress)
129	In idle state, (operator name/clock/date). This state is a sub-state to 'ready' (0) and has the following definition: In Idle state, that is, operator, clock and date (is set) shown on the display No conversation or data call in progress No sub-menus shown on the display 4 Only digits, clear, *, NO and # allowed in this mode, not changing mode
130	Mobile oriented call in progress. This is a sub-state to 'call in progress'
131	Mobile terminated call in progress. This is a sub-state to 'call in progress'

<mode>	*Description*
1	Allows the CPAS to return Ericsson specific <pas> values, such as 129, 130 and 131

3.23 AT+CPIN PIN Control

Description	*Command*	*Possible Responses*
Request PIN Control	AT+CPIN=<pin>[,<new pin>]	• +CME ERROR: <err> • OK • ERROR
Show the current setting	AT+CPIN?	• +CPIN: <code> • +CME ERROR: <err> • OK • ERROR
Show if the command is supported	AT+CPIN=?	• +CME ERROR: <err> • +CPIN: (supported <code>s) • OK • ERROR

Sends the password to the ME, which is necessary to make the ME operational (SIM PIN, SIM PUK or PH-SIM). If the PIN is to be entered twice, the TA autonomously repeats the PIN. If no PIN request is pending, no action is taken towards the ME and an error message (+CME ERROR <err>) is returned to the TE.

If the PIN required is PUK, the second pin is required. This second PIN, <newpin>, is used to replace the old PIN in the SIM.

Note! Commands which interact with the ME that are accepted when the ME has a pending request for SIM PIN, SIM PUK or PH-SIM are: +CGMI, +CGMM, +CGMR, +CGSN, +CFUN, +CMEE +CPIN, L and M.

<pin>,<newpin>	*Description*
string	The range for the SIM PIN and the PH- SIM PIN is 4 - 8 digits. The SIM PUK consists of 8 digits

<code>	*Description*
READY	ME is not pending for any password
SIM PIN	ME is waiting SIM PIN to be given
SIM PUK	ME is waiting SIM PUK to be given

<code>	*Description*
PH-SIM PIN	ME is waiting PHone-to-SIM card password to be given
SIM PIN2	ME is waiting SIM PIN2 to be given. This <code> is recommended to be returned only when the last executed command resulted in PIN2 authentication failure (i.e. +CME ERROR: 17); if PIN2 is not entered correctly after the failure, it is recommended that ME does not block its operation
SIM PUK2	ME is waiting SIM PUK2 to be given. This <code> is recommended to be returned only when the last executed command resulted in PUK2 authentication failure (i.e. +CME ERROR:18); if PUK2 and new PIN2 are not entered correctly after the failure, it is recommended that ME does not block its operation.
BLOCKED	The SIM cards is blocked for the user

<err>	*Description*
0	Phone failure
5	PH-SIM PIN required
10	SIM not inserted
11	SIM PIN required
12	SIM PUK required
13	SIM failure
14	SIM busy
15	SIM wrong
16	Incorrect password
24	Text string too long
25	Invalid characters in text string
100	Unknown

3.24 AT+CPWD Change Password

Description	*Command*	*Possible Responses*
Request facility lock	AT+CPWD=<fac>, <oldpwd>, <newpwd>	• +CME ERROR <err> • OK • ERROR
Show if the command is supported	AT+CPWD=?	• +CPWD: (<fac1>,<pwdlength1>), (<fac2>,<pwdlength2>), … • +CME ERROR <err> • OK • ERROR

Sets a new password for the facility lock function defined by command Facility Lock +CLCK.

Test command returns a list of pairs which present the available facilities and the maximum length of their password.

<fac>	*Description*
"PS"	PH-SIM (lock PHone to SIM card) (ME asks password when other than current SIM card inserted)
"SC"	SIM (lock SIM card) (SIM asks password in ME power-up and when this lock command issued)
"P2"	SIM PIN2
"AO"	BAOC (Barr All Outgoing Calls) (refer GSM 02.88 clause 1)
"OI"	BOIC (Barr Outgoing International Calls) (refer GSM 02.88 clause 1)
"AI"	BAIC (Barr All Incoming Calls) (refer GSM 02.88 clause 2)
"IR"	BIC-Roam (Bar Incoming Calls when Roaming outside the home country) (refer GSM 02.88 clause 2)
"OX"	BOIC-exHC (Barr Outgoing International Calls except to Home Country) (refer GSM 02.88 clause 1)
"AB"	All Barring services (refer GSM 02.30)
"AG"	All outGoing barring services (refer GSM 02.30)
"AC"	All inComing barring services (refer GSM 02.30)

<oldpwd>	*Description*
string type	<oldpwd> shall be the same as password specified for the facility from the ME user interface or with the change password command, +CPWD

<newpwd>	*Description*
string type	<newpwd> is the new password, maximum length of password can be determined with <pwdlength>

<pwdlength>	*Description*
Integer type	Maximum length of the password for the facility

<err>	*Description*
0	Phone failure
3	Operation not allowed
5	PH-SIM PIN required
10	SIM not inserted
11	SIM PIN required
12	SIM PUK required
13	SIM failure
14	SIM busy
15	SIM wrong
16	Incorrect password
17	SIM PIN2 required
18	SIM PUK2 required
23	Text string too long
24	Invalid characters in text string
100	Unknown
101..255	Reserved by ETS

3.25 AT+CR Service Reporting Control

Description	*Command*	*Possible Responses*
Set Service Reporting Control	AT+CR=<mode>	• OK • ERROR
Read current setting	AT+CR?	• +CR: <mode> • OK • ERROR
Test if the command is supported	AT+CR=?	• +CR: (list of supported <mode>s) • OK • ERROR

Enables or disables display of intermediate bearer capability reports during the handshake phase.

<mode>	*Description*
0	Disable reporting. **Default value**
1	Enable reporting

Intermediate Result Codes:

+CR: <serv>

3.26 AT+CRC Cellular Result Code

Description	*Command*	*Possible Responses*
Set Cellular Result Code option	AT+CRC=[<mode>]	• OK • ERROR
Show the current setting	AT+CRC?	• +CRC: <mode> • OK • ERROR
Show if the command is supported	AT+CRC=?	• +CRC: (list of supported <mode>s) • OK • ERROR

Command controls whether or not;

- the extended format of incoming call indication;
- or GPRS network request for PDP context activation;
- or notification for VBS/VGCS calls is used.

When enabled, an incoming call is indicated to the TE with unsolicited result code +CRING: <type> instead of the normal RING.

Test command returns values supported by the TA as a compound value.

<mode>	*Description*
0	Disables extended format
1	Enables extended format

Unsolicited Result Codes:

+CRING: <type>

3.27 AT+CSAS Save Settings

Description	*Command*	*Possible Responses*
Save Settings	AT+CSAS[=<profile>]	• *+CMS ERROR: <err>* • *OK* • *ERROR*
Get available profiles	AT+CSAS=?	• +CSAS: (list of supported <profile>s) • *+CMS ERROR: <err>* • OK • ERROR

Saves active message service settings to a non-volatile memory. A TA can contain several settings profiles. Settings specified in commands Service Centre Address +CSCA, Set Message Parameters +CSMP and Select Cell Broadcast Message Types +CSCB (if implemented) are saved. Certain settings may not be supported by the storage (e.g. SIM SMS parameters) and therefore can not be saved.

Test command shall display the supported profile numbers for reading and writing of settings.

<profile>	*Description*
0..255	Manufacturer specific profile number where settings are to be stored. **Default value is 0**

3.28 AT+CSQ Signal Strength

Description	*Command*	*Possible Responses*
Execute Signal Strength	AT+CSQ	• +CSQ: <rssi>,<ber> • +CME ERROR <err> • OK • ERROR
Test if the command is supported	AT+CSQ=?	• +CSQ: (list of supported <rssi>s),(list of supported <ber>s) • +CME ERROR <err> • OK • ERROR

Returns the received signal strength indication <rssi> and channel bit error rate <ber> from the ME. Test command returns values supported by the TA as compound values.

<rssi>	*Description*
0	–113dBm or less
1	–111dBm
2..30	–109… –53dBm
31	–51dBm or greater
99	Not known or not detectable

<ber>	*Description*
0..7	As RXQUAL values in the table in GSM 05.08 subclause 8.2.4
99	Not known or not detectable

3.29 AT+CTZU Automatic Time Zone Update

Description	*Command*	*Possible Responses*
Enable and disable automatic time zone update via NITZ	AT+CTZU=<onoff>	• +CME ERROR: <err> • OK • ERROR
Read current setting	AT+CTZU?	• +CTZU: <onoff> • +CME ERROR: <err> • OK • ERROR
Show if the command is supported	AT+CTZU=?	• +CTZU: (list of supported <onoff>s) • +CME ERROR: <err> • OK • ERROR

Enables and disables the automatic time zone update via NITZ. If setting fails in an ME error, +CME ERROR <err> is returned.

<onoff>	*Description*
0	The automatic time zone update is disabled (off). **Default value**
1	The automatic time zone update is enabled (on)

4. Audio

AT*E2EAMS and AT*E2APR are new commands that replace the funtionality offered by the *EALR, *EAMS, *EARS and *ELAM commands. Use the new commands in new applications. The old commands are included for compatibility.

*4.1 AT*E2EAMS Ericsson M2M Audio Profile Modification*

Description	*Command*	*Possible Responses*
Request operation with audio profile	AT*E2EAMS= <op>[,<TxPGA>, <RxPGA>,<SideToneGain>, <AuxInGain>,<MicInGain>, <TxAGC>,<Volume>, <MaxVolume>,<MicPath>, <SpkPath>,<TxPCM>, <RxPCM>,<HFAlgorithm>, <LocalAudio>,<TxGainLow>, <MicVolt2V>,<SideTone>, <NoiseRed>,<EchoCancel>, <AnalogRing>,][,<val>]]	• ERROR • OK
Display set profile	AT*E2EAMS?	• *E2EAMS: <TxPGA>, <RxPGA>, <SideToneGain>, <AuxInGain>, <MicInGain>, <TxAGC>,<Volume>, <MaxVolume>, <MicPath>,<SpkPath>, <TxPCM>,<RxPCM>, <HFAlgorithm>, <LocalAudio>, <TxGainLow>, <MicVolt2V>, <SideTone>,<NoiseRed>, <EchoCancel>, <AnalogRing> OK • ERROR
Show if the command is supported	AT*E2EAMS=?	• *E2EAMS: (list of supported <op>s) • ERROR

This command allows the modification and configuration of the current audio profile. An audio profile is a set of data which uniquely defines the way in which the audio paths, gains, DSP algorithms and switch setting are configured. There are several audio profiles available in non-volatile storage, and the current profile can be modified by use of the AT*E2APR command.

The AT*E2EAMS command allows the user to:

- configure the whole profile, specifying each audio parameter in a comma separated list;
- set a single parameter, given by its parameter number;
- save the current profile to non-volatile memory under the current profile number (see AT*E2APR).

The current audio settings can also be displayed by running the read command AT*E2EAMS?

Default audio settings are given in AT*E2APR.

Abortability:

This command may not be aborted.

Refer to the diagram below to understand which parts of the audio circuit are affected by the various parameters.

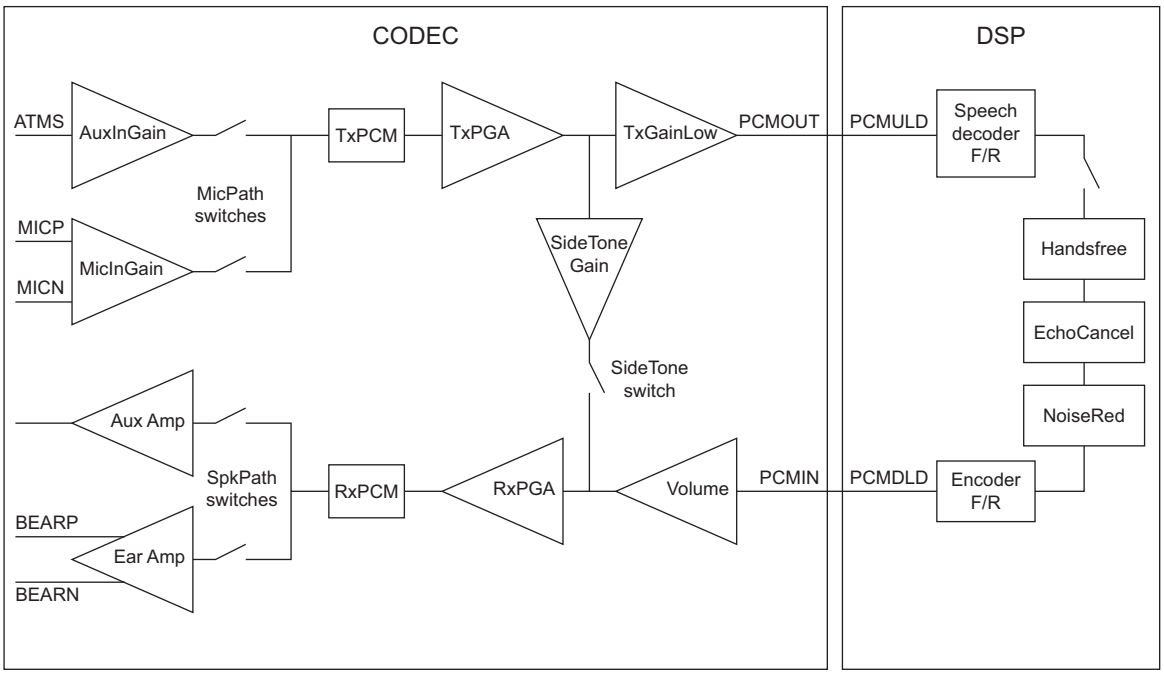

Figure 4.1 Audio diagram of the CODEC

<op>	*Description*
0	Configure current profile (<pr1> to <pr21>)
1	Set <TxPGA>
2	Set <RxPGA>
3	Set <SideToneGain>
4	Set <AuxInGain>
5	Set <MicInGain>
6	Set <TxAGC>
7	Set <Volume>
8	Set <MaxVolume>
9	Set <MicPath>
10	Set <SpkPath>
11	Set <TxPCM>
12	Set <RxPCM>
13	Set <HFAlgorithm>
14	Set <LocalAudio>
15	Set <TxGainLow>
16	Set <MicVolt2V>
17	Set <SideTone>
18	Set <NoiseRed>
19	Set <EchoCancel>
20	Set <AnalogRing>
255	Save current profile to non-volatile storage at current profile number

<TxPGA>, <RxPGA>	*Description*
0	-5dB PGA gain
1	-2.5dB PGA gain
2	0dB PGA gain
3	2.5dB PGA gain

<TxPGA>, <RxPGA>	*Description*
4	5dB PGA gain
5	7.5dB PGA gain
6	–7.5dB PGA gain
7	–10dB PGA gain

<SideToneGain>	*Description*
0	10dB
1	13dB
2	16dB
3	19dB
4	22dB
5	25dB

<AuxInputGain>	*Description*
0	MUTE
1	13dB
2	34dB
3	46dB

<MicInputGain>	*Description*
0	MUTE
1	13dB
2	25dB
3	34dB
4	46dB

<TxAGCGain>	*Description*
0	0dB
1	3dB
2	6dB

<Volume>, <MaxVolume>	*Description*
0	MUTE
1-9	Volume levels 1-9

<MicPath>, <SpkPath>	*Description*
0	OFF
1	MUTE
2	Internal (using microphone/speaker)
3	External (using ATMS/AFMS)

<TxPCM>, <RxPCM>	*Description*
0	13bit PCM
1	16bit PCM

<HFAlgorithm>	*Description*
0	No handsfree
1	Advanced handsfree
2	Switching handsfree
3	No handsfree handheld
4	No handsfree external

<LocalAudio>	*Description*
0	Local audio mode off
1	Local audio microphone/no speaker
2	Local audio no microphone/speaker
3	Local audio microphone/speaker

<TxGainLow>	*Description*
0	Tx gain normal
1	Tx gain –7 dB

<MicVolt2V>	*Description*
0	Microphone voltage at 2.5V
1	Microphone voltage at 2V

<SideTone>, <NoiseRed>, <EchoCancel>, <AnalogRing>	*Description*
0	OFF
1	ON

Examples

AT*E2EAMS=?
*E2EAMS=(0-21,255)
OK

Current default profile is 0:

AT*E2EAMS?
*E2EAMS: 2,2,3,2,3,2,5,9,3,3,0,1,0,0,0,1,1,1,1,1,1
OK

Sets current profile with these settings:

AT*E2EAMS=0,2,1,2,0,0,2,5,9,2,2,0,1,0,0,0,1,1,0,0,1,1
OK

Sets TxPGA gain to 0dB:

AT*E2EAMS=1,2
OK

Turns analog ringing off:

AT*E2EAMS=20,0
OK

Save current profile to currently loaded profile in non-volatile memory:

AT*E2EAMS=255
OK

4.2 AT*E2APR M2M Audio Profile Manipulation

Description	*Command*	*Possible Responses*
Request operation with audio profile	AT*E2APR= <op>[,<prnum1> [,<prnum2>]]	• ERROR • OK • *E2APR: <TxPGA>,<RxPGA>, <SideToneGain>,<AuxInGain>, <MicInGain>,<TxAGC>, <Volume>,<MaxVolume>, <MicPath>,<SpkPath>, <TxPCM>,<RxPCM>, <HFAlgorithm>,<LocalAudio>, <TxGainLow>,<MicVolt2V>, <SideTone>,<NoiseRed>, <EchoCancel>,<AnalogRing> • OK
Display currently set profile	AT*E2APR?	• *E2APR: current <prnum> • ERROR
Shows if the command is supported	AT*E2APR=?	• *E2APR: (list of supported <op>s), (list of supported <prnum1>s), (list of supported <prnum2>s) • ERROR

This command allows the maniuplation and storage of the audio “profiles” stored in the MS. The requirement for the 2nd and 3rd parameters depend on the operation being carried out.

Using the command you can:

- Set one of the three audio profiles 0, 1 or 2 as the current profile. This will load the profile's settings from NVM and implement them.
- Read one of the audio profiles. The current settings for the profile number defined will be displayed.
- Copy all parameters from one profile into another.
- Reset any of the profiles. This will reinstate the factory defaults for the profile:
  - 0 is the handset profile,
  - 1 is the portable handsfree profile,
  - 2 is the car kit profile.
- Set a profile as the default profile on next power up.

<op>	*Description*
0	Set profile <prnum1> to set as current
1	Copy profile <prnum1> to <prnum2>
2	Read profile <prnum1> settings
3	Reset profile <prnum1> to factory default
4	Set default profile as <prnum1>. Will store this as defautl profile in NVM, and use it as default from next power on

<prnum1>, <prnum2>	*Description*
0	Profile 0 (Factory profile set for handset). **Default value**
1	Profile 1 (Factory profile set for portable handsfree)
2	Profile 2 (Factory profile set for car kit)

Examples

AT*E2APR=?
*E2APR= (0-4),(0-2),(0-2)
OK

Current default profile is profile 0:

AT*E2APR?
*E2APR: 0
OK

Set audio profile now used to profile 1:

AT*E2APR=0,1
OK

Audio profile 1 settings:

AT*E2APR=1,1
*E2APR: 0,0,0,0,0,0,0,0,0,0,0,0,0,0,0,0,0,0,0
OK

Copy audio profile 1 to audio profile 2:

AT*E2APR=2,1,2
OK

Reset audio profile 1 with factory default - this also resets the current audio paths to the new profile as 1 is currently used:

AT*E2APR=3,1
OK

Sets profile number 1 as the default when modem is powered on:

AT*E2APR=4,1
OK

4.3 AT*EALR Ericsson Audio Line Request

Description	*Command*	*Possible Responses*
Request the audio lines (ATMS,AFMS)	AT*EALR=<mode> [,<activation> [,<aud_status>]]	• *EALR: <mode>, <activation>,<resp> • OK • ERROR
Show the current setting	AT*EALR?	*EALR: <mode>,<activation>, <resp>
Show list of supported parameters	AT*EALR=?	*EALR:(list of supported <mode>s, <activation>s and <aud_status>s parameters)

Included for compatibility. No functionality.

<mode>	*Description*
0	No request for ATMS or AFMS
1	Request ATMS and not AFMS
2	Request AFMS and not ATMS
3	Request ATMS and AFMS

<activation>	*Description*
0	Not direct activated audio accessory (e.g. cordless portable hands free)
1	Direct activated audio accessory (e.g. vehicle hands free)

<aud_status>	*Description*
0	No change of the audio status
1	Audio hand over. Accessory hands over control of both the audio lines and the call to the phone
2	Audio demand. Accessory demands control of both the audio lines and the call

<resp>	*Description*
0	Disable ATMS and AFMS
1	Enable ATMS and disable AFMS
2	Disable ATMS and enable AFMS
3	Enable ATMS and AFMS

4.4 AT*EAMS Ericsson Audio Mode Selection

Description	*Command*	*Possible Responses*
Sets the audio mode for the application	AT*EAMS=<internal_voice_alg>[,<noise_reduction> [,<side tone> [,<short_echo_canceling> [,<ATMS_gain> [,<class> [,<ATMS_sensitivity_deviation_from_class> [,<AFMS_sensitivity_deviation_from_class>]]]]]]]	• OK • ERROR
Show the current audio mode setting	AT*EAMS?	*EAMS:<internal_voice_alg>, <noise_reduction>, <side_tone>, <short_echo_canceling>, <AFMS_gain>,<class>,<ATMS_sensitivity_deviation_from_class>,<AFMS_sensitivity_deviation_from_class>
Show list of supported services	AT*EAMS=?	*EAMS: (list of supported <internal_voice_alg >s, <noise_reduction>s, <side_tone>s, <short_echo_canceling>s, <AFMS_gain>s>, <class>s, <ATMS_sensitivity_deviation_from_class>s, <AFMS_sensitivity_deviation_from_class>s)

Included for compatibility. No functionality.

<internal_voice_alg>	*Description*
0	None
1	Semi Duplex
2	Full Duplex (Note! the internal hands free algorithm in the MS contains echo cancelling)

<noise_reduction>	*Description*
0	Off
1	On

<side_tone>	*Description*
0	Off
1	On

<short_echo_canceling>	*Description*
0	Off
1	On

<ATMS_gain>	*Description*
0	Normal (0dB) (internal voice processing)

<Class>	*Description*
0	None
1	Low end, class reference Hector
2	Mid End, class reference Scott
3	High End, class reference Hasse

<ATMS_sensitivity_deviation_from_class>, <AFMS_sensitivity_deviation_from_class>	*Description*
0	0dB
1	2,5dB
2	–2,5dB
3	5,0dB
4	–5,0dB

4.5 AT*EARS Ericsson Audio Ring Signal

Description	*Command*	*Possible Responses*
Request analogue ring signal in the loudspeaker	AT*EARS=<mode>	• OK • ERROR
Show the current mode setting	AT*EARS?	*EARS: <mode>
Show list of supported modes	AT*EARS=?	*EARS: (list of supported <mode>s)

Included for compatibility. No functionality.

<mode>	*Description*
0	Disable analogue ring signal
1	Enable analogue ring signal

4.6 AT*ELAM Ericsson Local Audio Mode

Description	*Command*	*Possible Responses*
Set local audio mode	AT*ELAM=<mic> [,<loudspeaker>]	• *ELAM: <mic>, <loudspeaker> • OK • ERROR
Show the current service setting	AT*ELAM?	*ELAM: <mic>,<loudspeaker>
Show list of supported parameters	AT*ELAM=?	*ELAM: (list of supported <mic>s and <loudspeaker>s parameters)

Included for compatibility. No functionality.

<mic>	*Description*
0	Off
1	Microphone analogue

<loudspeaker>	*Description*
0	Off
1	Loudspeaker analogue

4.7 AT*EMIC Ericsson Microphone Mode

Description	*Command*	*Possible Responses*
Enables/disables the phone microphone	AT*EMIC=<mode>	• +CME ERROR: <err> • OK • ERROR
Test if the command is supported, show supported values	AT*EMIC=?	• *EMIC: (list of supported <mode>s) • +CME ERROR: <err> • OK • ERROR
Read the current settings	AT*EMIC?	• *EMIC: <mode> • +CME ERROR: <err> • OK • ERROR

Included for compatibility. No functionality.

<mode>	*Description*
0	Microphone is disabled (off)
1	Microphone is enabled (on)

4.8 AT*EMIR Ericsson Music Mute Indication Request

Description	*Command*	*Possible Responses*
Request for mute indications	AT*EMIR=<mode>	• OK • ERROR
Show supported message types along with the current service setting	AT*EMIR?	*EMIR: <mode>,<resp>
Show list of supported services	AT*EMIR=?	*EMIR: (list of supported <mode>s)

Included for compatibility. No functionality.

<mode>	*Description*
0	Off, music mute indication result codes will not be sent to the accessory
1	On, music mute indication result codes will be sent to the accessory

<resp>	*Description*
0	Music mute inactive
1	Music mute active

4.9 AT*EXVC Ericsson SET External Volume Control

Description	*Command*	*Possible Responses*
Sets the maximum volume level on the audio lines	AT*EXVC=<external volume>	• +CME ERROR: <err> • OK • ERROR
Test if the command is supported and show the possible report settings	AT*EXVC=?	• *EXVC: (list of supported <external volume>s) • +CME ERROR: <err> • OK • ERROR
Read the current setting	AT*EXVC?	• *EXVC: <external volume> • +CME ERROR: <err> • OK • ERROR

Used to set or query whether an external accessory such as the vehicle handsfree controls the audio volume.

By default, the <external volume> is turned off, i.e. the volume over AFMS is controlled by the phone MMI.

The set command is effective only as long as the phone senses that it is connected to an external accessory that has issued the command. Once the phone and the accessory are disconnected the <external volume> setting returns to default.

<external volume>	*Description*
0	The phone MMI controls audio volume over AFMS
1	Audio volume over AFMS is output at maximum level that is no clipping occurs. An external accessory such as a vehicle kit controls the actual volume level heard by the user

5. Data - CSD/HSCSD

Note! Since the modem does not support V42bis compression the following commands have not been implemented:

- AT+DS
- AT+DR

5.1 AT+CBST Select Bearer Service Type

Description	*Command*	*Possible Responses*
Select bearer service type	AT+CBST=[<speed>,[<name>,[<ce>]]]	• OK • ERROR
Read the command	AT+CBST?	• +CBST: <speed>,<name>,<ce> • OK • ERROR
Test if the command is supported	AT+CBST=?	• +CBST: (list of supported <speed>s,list of supported <name>s, list of supported <ce>s) • OK • ERROR

Selects the bearer service <name> with data rate <speed>, and the connection element <ce> to be used when data calls are originated. Values may also be used during mobile terminated data call setup, especially in the case of single numbering scheme calls.

Test command returns values supported by the TA as compound values.

<speed>	*Description*
0	Auto selection of baud rate
4	2400bps V.22bis
6	4800bps V.32
7	9600bps V.32
12	9600bps V.34
15	19200bps V.34
68	2400bps V.110 (ISDN)
70	4800bps V.110 (ISDN)

<speed>	*Description*
71	9600bps V.110 (ISDN)
75	14400bps V.110 (ISDN)
79	19200bps V.110 (ISDN)
80	28800bps V.110 (ISDN)
81	38400bps V.110 (ISDN)
82	48000bps V.110 (ISDN)
83	56000bps V.110 (ISDN)

<name>	*Description*
0	Asynchronous connection (UDI or 3.1kHz modem)

<ce>	*Description*
1	Non transparent

5.2 AT+CRLP Radio Link Protocol

Description	*Command*	*Possible Responses*
Set radio link protocol	AT+CRLP=[<iws> [,<mws>[,<T1> [,<N2>[,<ver> [, <T4>]]]]]]	• OK • ERROR
Read the command	AT+CRLP?	• +CRLP: <iws>,<mws>,<T1>,<N2>[,<ver1> [,<T4>]][<CR><LF> • +CRLP: <iws>,<mws>,<T1>,<N2>[,<ver2> [,<T4>]][...]] • OK • ERROR
Test if the command is supported	AT+CRLP=?	• +CRLP: (list of supported <iws>s), (list of supported <mws>s), (list of supported <T1>s), (list of supported<N2>s)[,<ver1> [,(list of supported <T4>s)]] [<CR><LF>+CRLP: (list of supported <iws>s), (list of supported <mws>s), (list of supported <T1>s), (list of supported <N2>s)[,<ver2>[,(list of supported <T4>s)]][...]] • OK • ERROR

Radio link protocol (RLP) parameters used when non-transparent data calls are originated may be altered with this command. Available command subparameters depend on the RLP versions implemented by the device (e.g. <ver> may not be available if device supports only versions 0 and 1).

Read command returns current settings for each supported RLP version <verx>. Only RLP parameters applicable to the corresponding <verx> are returned.

Test command returns values supported by the TA as a compound value. If ME/TA supports several RLP versions <verx>, the RLP parameter value ranges for each <verx> are returned in a separate line.

<iws>	*Description*
120 0 - 496	IWF to MS window size

<mws>	*Description*
120 0 - 496	MS to IWF window size

<T1>	*Description*
48 38 - 100	Acknowledgment timer T1 (*10ms)

<N2>	*Description*
6 0 - 255	Re-transmission attempts N2

<T4>	*Description*
5 3 - 255	Re-sequencing period T4 (*10ms)

<ver>	*Description*
Integer	RLP version. When version indication is not present, <ver>=0 is assumed

6. Data - GPRS

6.1 AT+CGACT PDP Context Activate or Deactivate

Description	*Command*	*Possible Responses*
Activate or deactivate the specified PDP context(s)	+CGACT=[<state> [,<cid>[,<cid>[,…]]]]	• +CME ERROR: <err> • OK • ERROR
Read the command	+CGACT?	• +CGACT: <cid>, <state>[<CR><LF> +CGACT: <cid>, <state>[...]] • OK • ERROR
Test if the command is supported	+CGACT=?	• +CGACT: (list of supported <state>s) • OK • ERROR

Used to activate or deactivate the specified PDP context(s).

After the command has completed, the MS remains in V.250 command state. If the MS is already in the requested state, the command is ignored and OK is returned. If the requested state cannot be achieved, ERROR or +CME: ERROR is returned. If the MS is not attached to the GPRS service when the activation form of the command is executed, the MS first performs a GPRS attach and then attempts to activate the specific contexts.

If no <cid>s are specified the activation form of the command activates all defined contexts.

If no <cid>s are specified the deactivation form of the command deactivates all active contexts.

<state>	*Description*
0	PDP context activation deactivated
1	PDP context activation activated

<cid>	*Description*
Integer type	A numeric parameter which specifies a specific PDP context definition

6.2 AT+CGATT GPRS Attach or Detach

Description	*Command*	*Possible Responses*
Attach or detach MS to the GPRS/packet domain/packet domain service	+CGATT=[<state>]	• +CME ERROR: <err> • OK • ERROR
Read the command	+CGATT?	• +CGATT: <state> • OK • ERROR
Test if the command is supported	+CGATT=?	• +CGATT: (list of supported <state>s) • OK • ERROR

Used to attach the MS to, or detach the MS from, the GPRS/packet domain service. After the command has completed, the MS remains in V.250 command state. If the MS is already in the requested state, the command is ignored and the OK response is returned. If the requested state cannot be achieved, an ERROR or +CME ERROR response is returned. Extended error responses (enabled by the +CMEE command) are listed under "+CME ERROR (Mobile Equipment Error Code)", page 55.

Any active PDP contexts will be automatically deactivated when the attachment state changes to detached.

Note! This command has the characteristics of both the V.250 action and parameter commands. Hence it has the read form in addition to the execution/set and test forms.

<state>	*Description*
0	Detached
1	Attached

6.3 AT+CGDATA Enter Data State

Description	*Command*	*Possible Responses*
Establish GPRS/packet domain connection	+CGDATA=[<L2p>,[cid [,cid>[,...]]]]	• CONNECT • ERROR • OK • ERROR
Test if the command is supported	+CGDATA=?	• +CGDATA: (list of supported <L2P>s) • OK • ERROR

Causes the MS to perform whatever actions are necessary to establish communication between the TE and the network using one or more GPRS/packet domain PDP types. This may include performing a GPRS/packet domain attach and one or more PDP context activations.

<L2P>	*Description*
PPP	Point-to-point protocol for a PDP such as IP

6.4 AT+CGDCONT Define PDP Context

Description	*Command*	*Possible Responses*
Select PDP context parameters	+CGDCONT=[<cid> [,<PDP_type> [,<APN> [,<PDP_addr> [,<d_comp> [,<h_comp> [,<pd1> [,…[,pdN]]]]]]]]	• +CME ERROR: <err> • OK • ERROR
Read the command	+CGDCONT?	• +CGDCONT: <cid>, <PDP_type>,<APN>, <PDP_addr>,<d_comp>, <h_comp>[,<pd1>[,…[,pdN]]] [<CR><LF>+CGDCONT: <cid>, <PDP_type>,<APN>, <PDP_addr>,<d_comp>, <h_comp>[,<pd1>[,…[,pdN]]] [...]] • OK • ERROR
Test if the command is supported	+CGDCONT=?	• +CGDCONT: (range of supported <cid>s), <PDP_type>,,,(list of supported <d_comp>s), (list of supported <h_comp>s) [,(list of supported <pd1>s) [,…[,(list of supported <pdN>s)]]] [<CR><LF>+CGDCONT: (range of supported <cid>s), <PDP_type>,,,(list of supported <d_comp>s), (list of supported <h_comp>s) [,(list of supported <pd1>s)[,…[,(list of supported <pdN>s)]]] [...]] • OK • ERROR

Specifies PDP context parameter values for a PDP context identified by the (local) context identification parameter, <cid>.

<cid>	*Description*
Integer type	(PDP Context Identifier) a numeric parameter which specifies a particular PDP context definition. The parameter is local to the TE-MS interface and is used in other PDP context-related commands. The range of permitted values (minimum value = 1) is returned by the test form of the command
1-10	Supported values. **Ericsson specific**

<PDP_type>	*Description*
IP	Internet Protocol (IETF STD 5)

<APN>	*Description*
String type	(Access Point Name) a string parameter which is a logical name that is used to select the GGSN or the external packet data network. If the value is null or omitted, then the subscription value will be requested

<PDP_address>	*Description*
String type	A string parameter that identifies the MS in the address space applicable to the PDP. If the value is null or omitted, then a value may be provided by the TE during the PDP startup procedure or, failing that, a dynamic address will be requested

<d_comp>	*Description*
0	PDP data compression OFF
1	PDP data compression ON
2..255	Reserved

<h_comp>	*Description*
0	PDP header compression OFF
1	PDP header compression ON
2..255	Reserved

<pdN>	*Description*
String type	Zero to N string parameters whose meanings are specific to the <PDP_type>

6.5 AT+CGEREP GPRS Event Reporting

Description	*Command*	*Possible Responses*
Set command	+CGEREP=[<mode> [,<bfr>]]	• +CME ERROR: <err> • OK • ERROR
Read the command	+CGEREP?	• +CGEREP: <mode>,<bfr> • OK • ERROR
Test if the command is supported	+CGEREP=?	• +CGEREP: (list of supported <mode>s),(list of supported <bfr>s) • OK • ERROR

Enables or disables the sending of unsolicited result codes, +CGEV: XXX from MS to TE in the case of certain events occurring in the GPRS/packet domain MS or the network.

<mode>	*Description*
0	Buffer unsolicited result codes in the MS. No codes are forwarded to the TE
1	Discard unsolicited result codes when MS-TE link is reserved; otherwise forward them directly to the TE

<bfr>	*Description*
0	MS buffer of unsolicited result codes defined within this command is cleared when <mode> 1 or 2 is entered

6.6 AT+CGPADDR Show PDP Address

Description	*Command*	*Possible Responses*
Show PDP addresses for specified CIDs	+CGPADDR=[<cid> [,<cid> [,…]]]	• +CGPADDR: <cid>,<PDP_addr> [<CR><LF>+CGPADDR: <cid>,<PDP_addr> [...]] • OK • ERROR
Test if the command is supported	+CGPADDR=?	• +CGPADDR: (list of defined <cid>s) • OK • ERROR

Returns a list of PDP addresses for the specified context identifiers. The test command returns a list of defined <cid>s.

<cid>	*Description*
Integer type	Parameter which specifies a particular PDP context definition (see +CGDCONT command). If no <cid> is specified, the addresses for all defined contexts are returned

<PDP_address>	*Description*
String type	A string that identifies the MS in the address space applicable to the PDP. The address may be static or dynamic. For a static address, it will be the one set by the +CGDCONT command when the context was defined. For a dynamic address it will be the one assigned during the last PDP context activation that used the context definition referred to by <cid>. <PDP_address> is omitted if none is available

6.7 AT+CGQMIN Quality of Service Profile (Minimum Acceptable)

Description	*Command*	*Possible Responses*
Set minimum acceptable profile	+CGQMIN=[<cid> [,<precedence> [,<delay> [,<reliability> [,<peak> [,<mean>]]]]]]	• +CME ERROR: <err> • OK • ERROR
Read the command	+CGQMIN?	• +CGQMIN: <cid>, <precedence>, <delay>, <reliability>, <peak>, <mean>[<CR><LF>+CGQMIN: <cid>, <precedence>, <delay>, <reliability>, <peak>, <mean>[…]] • OK • ERROR
Test if the command is supported	+CGQMIN=?	• +CGQMIN: <PDP_type>, (list of supported <precedence>s), (list of supported <delay>s), (list of supported <reliability>s), (list of supported <peak>s), (list of supported <mean>s)[<CR><LF>+CGQMIN: <PDP_type>, (list of supported <precedence>s), (list of supported <delay>s), (list of supported <reliability>s), (list of supported <peak>s), (list of supported <mean>s)[…]] • OK • ERROR

Allows the TE to specify a minimum acceptable profile which is checked by the MS against the negotiated profile returned in the Activate PDP Context Accept message.

The set command specifies a profile for the context identified by the (local) context identification parameter, <cid>. Since this is the same parameter that is used in the +CGDCONT command, the +CGQMIN command is effectively an extension to the +CGDCONT command. The QoS profile consists of a number of parameters, each of which may be set to a separate value.

A special form of the set command, +CGQMIN=<cid> causes the minimum acceptable profile for context number <cid> to become undefined. In this case no check is made against the negotiated profile.

<cid>	*Description*
Integer type	Parameter which specifies a particular PDP context definition

<precedence>	*Description*
0	Subscribed (from network) value used
1	High priority
2	Normal priority
3	Low priority

<delay>	*Description*
0	Subscribed (from network) value used
1-4	Delay class

<reliability>	*Description*
0	Subscribed (from network) value used
1-5	Reliability class

<peak>	*Description*
0	Subscribed (from network) value used
1	Up to 1000 (8kbits/s)
2	Up to 2000 (16kbits/s)
3	Up to 4000 (32kbits/s)
4	Up to 8000 (64kbits/s)
5	Up to 16000 (128kbits/s)
6	Up to 32000 (256kbits/s)
7	Up to 64000 (512kbits/s)
8	Up to 128000 (1024kbits/s)
9	Up to 256000 (2048kbits/s)

<mean>	*Description*
0	Subscribed (from network) value used
1	Best effort
2	100 (~0.22bits/s)
3	200 (~0.44bits/s)
4	500 (~1.11bits/s)
5	1000 (~2.2bits/s)
6	2000 (~4.4bits/s)
7	5000 (~11.1bits/s)

<mean>	*Description*
8	10000 (~22bits/s)
9	20000 (~44bits/s)
10	50000 (~111bits/s)
11	100000 (~0.22kbits/s)
12	200000 (~0.44kbits/s)
13	500000 (~1.11kbits/s)
14	1000000 (~2.2kbits/s)
15	2000000 (~4.4kbits/s)
16	5000000 (~11.1kbits/s)
17	10000000 (~22kbits/s)
18	20000000 (~44kbits/s)
31	50000000 (~111kbits/s)

6.8 AT+CGQREQ Quality of Service Profile (Requested)

Description	*Command*	*Possible Responses*
Set quality of service profile	+CGQREQ=[<cid> [,<precedence> [,<delay> [,<reliability> [,<peak> [,<mean>]]]]]]	• +CME ERROR: <err> • OK • ERROR
Read the command	+CGQREQ?	• +CGQREQ: <cid>, <precedence>, <delay>, <reliability>, <peak>, <mean>[<CR><LF>+CGQREQ: <cid>, <precedence>, <delay>, <reliability>, <peak>, <mean>[…]] • OK • ERROR
Test if the command is supported	+CGQREQ=?	• +CGQREQ: <PDP_type>, (list of supported <precedence>s), (list of supported <delay>s), (list of supported <reliability>s), (list of supported <peak>s), (list of supported <mean>s) [<CR><LF>+CGQREQ: <PDP_type>, (list of supported <precedence>s), (list of supported <delay>s), (list of supported <reliability>s), (list of supported <peak>s), (list of supported <mean>s)[…]] • OK • ERROR

Allows the TE to specify a quality of service profile that is used when the MS sends an activate PDP context request message to the network.

The set command specifies a profile for the context identified by the (local) context identification parameter, <cid>. Since this is the same parameter that is used in the +CGDCONT command, the +CGQREQ command is effectively an extension to the +CGDCONT command. The QoS profile consists of a number of parameters, each of which may be set to a separate value.

A special form of the set command, +CGQREQ= <cid> causes the requested profile for context number <cid> to become undefined.

<cid>	*Description*
Integer type	Parameter which specifies a particular PDP context definition

<precedence>	*Description*
0	Subscribed (from network) value used
1	High priority
2	Normal priority
3	Low priority

<delay>	*Description*
0	Subscribed (from network) value used
1-4	Delay class

<reliability>	*Description*
0	Subscribed (from network) value used
1-5	Reliability class

<peak>	*Description*
0	Subscribed (from network) value used
1	Up to 1000 (8kbits/s)
2	Up to 2000 (16kbits/s)
3	Up to 4000 (32kbits/s)
4	Up to 8000 (64kbits/s)
5	Up to 16000 (128kbits/s)
6	Up to 32000 (256kbits/s)
7	Up to 64000 (512kbits/s)
8	Up to 128000 (1024kbits/s)
9	Up to 256000 (2048kbits/s)

<mean>	*Description*
0	Subscribed (from network) value used
1	Best effort
2	100 (~0.22bits/s)
3	200 (~0.44bits/s)
4	500 (~1.11bits/s)
5	1000 (~2.2bits/s)
6	2000 (~4.4bits/s)
7	5000 (~11.1bits/s)
8	10000 (~22bits/s)
9	20000 (~44bits/s)
10	50000 (~111bits/s)
11	100000 (~0.22kbits/s)
12	200000 (~0.44kbits/s)
13	500000 (~1.11kbits/s)
14	1000000 (~2.2kbits/s)
15	2000000 (~4.4kbits/s)
16	5000000 (~11.1kbits/s)
17	10000000 (~22kbits/s)
18	20000000 (~44kbits/s)
31	50000000 (~111kbits/s)

6.9 AT+CGREG GPRS Network Registration Status

Description	*Command*	*Possible Responses*
Set command	AT+CGREG=[<n>]	• +CME ERROR: <err> • OK • ERROR
Read the current settings	AT+CGREG?	• +CGREG: <n>,<stat>[,<lac>, <ci>] • +CME ERROR: <err> • OK • ERROR
Test if the command is supported	AT+CGREG=?	• +CGREG: (list of supported <n>s) • OK • ERROR

Controls the presentation of an unsolicited result code +CGREG: <stat> when <n>=1 and there is a change in the GPRS/packet domain network registration status of the MS, or code +CGREG: <stat>[,<lac>,<ci>] when <n>=2 and there is a change of the network cell.

Note! If the GPRS/Packet Domain MS also supports circuit mode services, the +CGREG command and +CGREG: result code apply to the registration status and location information for those services.

<n>	*Description*
0	Disable network registration unsolicited result code
1	Enable network registration unsolicited result code
2	Enable network registration and location information unsolicited result code

<stat>	*Description*
0	Not registered, MS is not searching for a new operator to register with
1	Registered, home network
2	Not registered, but MS is searching for a new operator to register with
3	Registration denied
4	Unknown
5	Registered, roaming

<lac>	*Description*
String type	Two byte location area code in hexadecimal format

<ci>	*Description*
String type	Two byte cell ID in hexadecimal format

6.10 AT+CGSMS Select Service for MO SMS Messages

Description	*Command*	*Possible Responses*
Set service or service preference	+CGSMS=[<service>]	• OK • ERROR
Read the command	+CGSMS?	• +CGSMS: <service> • OK • ERROR
Test if the command is supported	+CGSMS=?	• +CGSMS: (list of available <service>s) • OK • ERROR

Used to specify the service or service preference that the MS will use to send MO SMS messages. The read command returns the currently selected service or service preference.

<services>	*Description*
2	GPRS/packet domain preferred (use circuit switched if GPRS/packet domain not available)
3	Circuit switched preferred (use GPRS/packet domain if circuit switched not available)

7. Data - HSCSD

7.1 AT+CHSC HSCSD Current Call Parameters

Description	*Command*	*Possible Responses*
Show current HSCSD call parameters	AT+CHSC	• +CHSC:<rx>,<tx>,<aiur>,<coding> • +CME ERROR: <err> • OK • ERROR
Test if command is supported	AT+CHSC=?	• +CME ERROR: <err> • OK • ERROR

Returns information about the current HSCSD call parameters, i.e. the current number of receive and transmit timeslots, air interface user rate and channel coding.

<rx>	*Description*
0	No HSCSD call is active. See also note below
1	The number of receive timeslots currently in use is 1
2	The number of receive timeslots currently in use is 2

<tx>	*Description*
0	No HSCSD call is active. See also note below
1	The number of transmit timeslots currently in use is 1

<aiur>	*Description*
0	No HSCSD call is active. See also note below.
1	Current air interface user rate is 9.6kbits/s
3	Current air interface user rate is 19.2kbits/s

<coding>	*Description*
0	No HSCSD call is active. See also note
4	Current channel coding is 9.6kbits/s (TCH/F9.6)
8	Current channel coding is 14.4kbits/s (TCH/F14.4)

7.2 AT+CHSD HSCSD Device Parameters

Description	*Command*	*Possible Responses*
Show HSCSD features supported by the ME/TA	AT+CHSD	• +CHSD: <mclass>,<maxRx>, <maxTx>,<sum>,<codings> • +CME ERROR: <err> • OK • ERROR
Test if command is supported	AT+CHSD=?	• +CME ERROR: <err> • OK • ERROR

Shows information about HSCSD features supported by the ME/TA.

<mclass>	*Description*
2	Multislot class is 2

<maxRx>	*Description*
2	Maximum number of receive timeslots that ME can use is 2

<maxTx>	*Description*
1	Maximum number of transmit timeslots that ME can use is 1

<sum>	*Description*
3	Total number of receive and transmit timeslots that ME can use at the same time is 3 (i.e. 2+1). The following applies in a HSCSD call: 2 (receive slots) + (transmit slots) <sum>

<codings>	*Description*
4	Indicates that the accepted channel coding for the next established non-transparent HSCSD call is 9.6kbits/s only

7.3 AT+CHSN HSCSD Non Transparent Call Configuration

Description	*Command*	*Possible Responses*
Set HSCSD configuration. This command is also used during a call if new <wAiur> and/or <wRx> are/is desired	AT+CHSN=[<wAiur> [,<wRx>[,<topRx> [,<codings>]]]]	• +CME ERROR: <err> • OK • ERROR
Show current non-transparent HSCSD setting	AT+CHSN?	• +CHSN: <wAiur>, <wRx>, <topRx>, <codings> • +CME ERROR: <err> • OK • ERROR
Test if command is supported and show parameter ranges	AT+CHSN=?	• +CHSN: (list of supported <wAiur>s), (list of supported <wRx>s), (list of supported <topRx>s), (list of supported <codings>s) • +CME ERROR: <err> • OK • ERROR

Controls parameters for non-transparent HSCSD calls. Changing <topRx> or <codings> during a call does not affect the current call. Changing <wAiur> or <wRx> affects the current call only if <topRx> was non-zero when the call was established. When using the command in this way it comes in the “action” command category. This is what is referred to as user initiated up- and down-grading in GSM 02.34 and GSM 03.34.

Note! Recommended value for parameter <speed> in AT+CBST is 0.

<wAiur>	*Description*
0	TA/ME shall calculate a proper number of receive timeslots from currently selected fixed network user rate (<speed> parameter from +CBST command, and <codings>, and <wRx> (or <maxRx> from +CHSD command if <wRx>=0)
1	Wanted air interface user rate is 9.6kbit/s
2	Wanted air interface user rate is 14.4kbit/s
3	Wanted air interface user rate is 19.2kbit/s
4	Wanted air interface user rate is 28.8kbit/s

<wRx>	Description
0	TA/ME shall calculate a proper number of receive timeslots from currently selected <wAiur> and <codings> See note below
1	Wanted number of receive timeslots is 1
2	Wanted number of receive timeslots is 2

<topRx>	Description
0	Indicates that the user is not going to change <wAiur> and /or <wRx> during the next call
1	Top value for <wRx> that user is going to request during the next established non-transparent HSCSD call is 1
2	Top value for <wRx> that user is going to request during the next established non-transparent HSCSD call is 2

<codings>	Description
4	Indicates that the accepted channel coding for the next established non-transparent HSCSD call is 9.6kbit/s only

7.4 AT+CHSR HSCSD Parameters Report

Description	Command	Possible Responses
Set HSCSD parameters reporting on or off	AT+CHSR=[<mode>]	• +CME ERROR: <err> • OK • ERROR
Show current setting	AT+CHSR?	• +CHSR: <mode> • +CME ERROR: <err> • OK • ERROR
Test if command is supported and show parameter range	AT+CHSR=?	• +CHSR: (list of supported <modes>s) • +CME ERROR: <err> • OK • ERROR

With this command enabled, the intermediate result code +CHSR: <rx>,<tx>,<aiur>,<coding> is returned (from TA to TE) when an HSCSD call is being set up. The result code represents the current (negotiated or renegotiated) HSCSD parameters. If enabled, the intermediate result code is transmitted at the point of the call setup negotiation, where the ME/TA has determined what type of HSCSD connection will be used. Result code transmission is done after possible service (CR), error control (+ER), and/or compression (+DR) reporting,

but before possible TE-TA rate (+ILRR) reporting and before the intermediate result code CONNECT is transmitted. The format of the intermediate result code is:

+CHSR: <rx>,<tx>,<aiur>,<coding>

For the value definitions, refer to “AT+CHSC HSCSD Current Call Parameters”, page 121. For instance, for a non-transparent HSCSD call, result code ‘CHSR: 2, 1, 4, 8’ means that the call has two timeslots downlink, one timeslot uplink, the air interface user rate is 28.8 kbits/s and the used channel coding is
TCH/F14.4.

<mode>	*Description*
0	Disable reporting
1	Enable reporting

Itermediate Result Codes:

+CHSR: <rx>,<tx>,<aiur>,<coding>

7.5 AT+CHSU HSCSD Automatic User Initiated Upgrading

Description	*Command*	*Possible Responses*
Set HSCSD automatic user initiated upgrading on or off	AT+CHSU=[<mode>]	• OK • ERROR
Show current setting	AT+CHSU?	• +CHSU=<mode> • OK • ERROR
Test if command is supported and show parameter range	AT+CHSU=?	• +CHSU: (list of supported <modes>s) • OK • ERROR

Enables or disables the HSCSD automatic user-initiated upgrade.

<mode>	*Description*
0	Disable use of UP bit for upgrading. **Default value**
1	Enable use of UP bit for upgrading

8. Fax

8.1 AT*E2FAX Ericsson M2M Fax Comm. Baud Rate Modification

Description	*Command*	*Possible Responses*
Request change of fax comm. baud rate	AT*E2FAX= <RcV>	• ERROR • OK
Displays currently set rate	AT*E2FAX?	• *E2FAX: <RcV> • ERROR
Shows if the command is supported	AT*E2FAX=?	• *E2FAX: (list of supported <RcV>s) • ERROR

This command allows the modification of the factory default RS232 comm. setting between standard 9600 baud and 19200 baud. This is needed as the addition of fax capabilities, within the module, require communication between fax applications and the module to run at a higher baud rate than the fax transmission baud rate (In this case the fastest transmission rate is 9600 baud). Once this command has been performed, the user must then execute the AT&F command to reset the module with the new RS232 comm's baud rate.

The AT*E2FAX command allows the user to:

- “Configure” the RS232 Comm. speed default factory profile, specifying whether the speed should be 9600 baud (standard) or 19200 baud for FAX application comm. This value will then be used once the AT&F command is next used.
- “Read” what value this default factory profile has been set to.

<RcV>	*Description*
0	Configure RS232 default setting to 9600 baud
1	Configure RS232 default setting to 19200 baud

Examples

AT*E2FAX=?

*E2FAX= (0-1)
OK

AT*E2FAX?

*E2FAX: 0 (Current default setting is 19200 baud)
OK

AT*E2FAX=0

OK (Sets default RS232 setting to 9600 baud)

8.2 Low Level Fax Commands

The following table of low level fax commands are supported and used by the GM28 for fax operation.

AT+FAA	AT+FBADLIN	AT+FBADMUL
AT+FBOR	AT+FBUG	AT+FCIG
AT+FCLASS	AT+FCQ	AT+FCR
AT+FDCC	AT+FDFFC	AT+FDIS
AT+FDR	AT+FDT	AT+FECM
AT+FET	AT+FK	AT+FLID
AT+FLNFC	AT+FLPL	AT+FMDL?
AT+FMFR?	AT+FMI?	AT+FMINSP
AT+FMM?	AT+FMR?	AT+FPHCTO
AT+FPTS	AT+FRBC	AT+FREL
AT+FREV?	AT+FRH	AT+FRM
AT+FRS	AT+FSPL	AT+FTBC
AT+FTH	AT+FTM	AT+FTS
AT+FVRFC	AT+FWDFC	

9. Identification

9.1 AT Attention Command

Description	Command	Possible Responses
Checks the communication between the MS and application	AT	• OK • +CME ERROR <err>

This command is used to determine the presence of an MS. If the MS supports AT commands, it returns an OK final result code.

9.2 AT&F Set to Factory Defined Configuration

Description	Command	Possible Responses
Execute	AT&F	• OK • ERROR
Show if supported and list available parameter range	AT&F=?	&F: (list of supported <profile>s)

This command instructs the DCE to set all parameters to default values specified by the manufacturer, which may take in consideration hardware configuration and other manufacturer defined criteria.

9.3 AT&W Store User Profile

Description	Command	Possible Responses
Stores the current user profile to non volatile memory	AT&W=[<pr>] or AT&W[<pr>]	• OK • ERROR
Show if the command is supported	AT&W=?	&W: (list of supported <pr>s)

This command stores the current user profile in non-volatile memory.

< pr>	Description
0	Stores current settings in User Profile 0

9.4 AT* List all Supported AT Commands

Description	*Command*	*Possible Responses*
List all implemented AT commands	AT*	<AT Command1> [<CR> <LF> <AT Command2>[…]] / <AT Command1> [<CR> <LF> <AT Command2>[…]]

Lists all the commands supported by the MS.

9.5 AT+CGMI Read MS Manufacturer Identification

Description	*Command*	*Possible Responses*
Request manufacturer identification	AT+CGMI	• <manufacturer> • +CME ERROR: <err>
Show if the command is supported	AT+CGMI=?	• OK • ERROR

Causes the MS to return one or more lines of information text.

<manufacturer>	*Description*
Sony Ericsson	This company's name is displayed

9.6 AT+CGMM Read MS Model Identification

Description	*Command*	*Possible Responses*
Request the model identification	AT+CGMM	• <model type> <model name> • +CME ERROR: <err>
Show if the command is supported	AT+CGMM=?	• OK • ERROR

Causes the MS to return one or more lines of information text <model>, determined by the MS manufacturer. It is intended to permit the user of the ITAE/ETAE to identify the specific model of the MS to which it is connected. Typically the text will consist of a single line containing the name of the product, but manufacturers may choose to provide more information if desired.

<model type>	*Description*
String type	A unique ASCII character/digit string, always 10 characters long. Spaces are used when the number of characters/digits is less than 10

<model name>	*Description*
String type	Model name for the transceiver unit, for example, GM28

9.7 AT+CGMR Read MS Revision Identification

Description	*Command*	*Possible Responses*
Request MS revision identification string	AT+CGMR	• <revision> • +CME ERROR: <err>
Show if the command is supported	AT+CGMR=?	• OK • ERROR

This command causes the MS to return a string containing information about the software version.

<revision>	*Description*
String type	An ASCII string containing date (year, month, day, hour, minute) plus KRC number. Example: 9710051610 CXC125112

9.8 AT+CGSN Read MS Product Serial Number Identification

Description	*Command*	*Possible Responses*
Request product serial number	AT+CGSN	• <sn> • +CME ERROR: <err>
Show if the command is supported	AT+CGSN=?	• OK • ERROR

This command causes the MS to return the IMEI (International Mobile station Equipment Identity), which identifies the individual ME.

<sn>	*Description*
String	The IMEISV, which is the IMEI (International Mobile station Equipment Identity; refer GSM 03.03) number of the ME and the software version number. Text shall not contain the sequence 0<CR> or OK<CR>

9.9 ATI Identification Information

Description	*Command*	*Possible Responses*
Execute	ATI[<value>]	<information>

This command causes the DCE to transmit one or more lines of text, followed by a final result code. As an option, <value> can be used to select from among multiple types of identifying information as shown in the table below.

This command provides compatibility with Microsoft Windows 95.

<value>	*Description*
0	Same information as +GMM command (model identification)
1	Same information as +GMR command (revision identification)
3	Modem model description
5	Active settings
7	Modem configuration profile (brief listing of the modem functionality: fax classes, Bluetooth, IrDA, modem type, etc.)
8	DCE hardware type version
9	PnP (plug and play) information

9.10 AT+GCAP Request Modem Capabilities List

Description	*Command*	*Possible Responses*
Request complete capability list	AT+GCAP	+GCAP: (list of supported <capability>s)
Test if command is supported	AT+GCAP=?	• OK • ERROR

Returns a list of valid modem command prefixes.

<capability>	*Description*	*GSM*	*3G1 single mode*	*3G1 dual mode*
+CGSM	GSM commands	Supported	Supported	Supported
+FCLASS	Facsimile class 1 and 2 commands	Supported	Not supported	Not supported
+DS	V.42 bis compression	Supported	Not supported	Supported (only for Circuit Switched data calls in a GSM network)

10. Interface

10.1 AT+CPIN PIN Control

See 3.23, AT+CPIN PIN Control

10.2 AT&C Circuit 109 (DCD) Control

Description	*Command*	*Possible Responses*
Set behavior of carrier detect	AT&C[<value>]	OK ERROR

Determines the behaviour of the carrier detect.

<value>	*Description*
0	DCD always on
1	DCD follows the connection. **Default value**

10.3 AT&D Circuit 108 (DTR) Response

Description	*Command*	*Possible Responses*
Control actions from DTE	AT&D[<value>]	OK ERROR

Controls all actions initiated by data terminal ready from DTE.

<value>	*Description*
0	Ignore. **Default value**
1	When in on-line data mode, switch to on-line command mode. For all other states, see <value>=2
2	Disconnect and switch to off-line command mode

10.4 AT&S Circuit 107 (DSR) Response

Description	*Command*	*Possible Responses*
Set behaviour of data set ready	AT&S[<value>]	• OK • ERROR

Determines the behaviour of the data set ready signal.

<value>	*Description*
0	DSR always on
1	DSR on in data mode. DSR off in command mode. **Default value**

10.5 AT+WS46 Mode Selection

Description	*Command*	*Possible Responses*
Sets the cellular protocol mode	AT+WS46=n	• OK • ERROR
Queries the current cellular protocol mode	AT+WS46?	• <n> OK • ERROR
Queries the possible cellular protocol modes	AT+WS46=?	• (list of supported <n>s) OK • ERROR

Allows an accessory to query and control the cellular protocol mode of the phone.

<n> parameter	*Description*
12	This value is used for GSM at 900 MHz., DCS-1900, and PCS-1900 phones

10.6 ATE Command Echo

Description	*Command*	*Possible Responses*
Request Command Echo	ATE[<value>] ATE=[<value>]	• OK • ERROR
Show the current setting	ATE?	<value>
Show if the command is supported	ATE=?	E: (list of supported <value>s)

The setting of this parameter determines whether or not the DCE echoes characters received from the DTE during command state and online command state.

<value>	*Description*
0	DCE does not echo characters during command state and online command state
1	DCE echoes characters during command state and online command state. **Default value**

10.7 ATV DCE Response Format

Description	*Command*	*Possible Responses*
Set DCE response format	ATV[=]<value>	• OK • ERROR
Read the current setting	ATV?	V: <value>
Show if the command is supported	ATV=?	V: (list of supported <value>s)

Select either descriptive or numeric response codes. The ATV command sets the verbose numeric response codes and strips off the <S3><S4> additions to the command response.

<value>	*Description*
0	Display numeric result codes
1	Display verbose result codes. **Default value**

List of result codes

ATV1/ATV=1	*ATV0/ATV=0*	*Description*
OK	0	Acknowledges execution of a command
CONNECT	1	A connection has been established; the DCE is moving from command state to online data state
RING	2	The DCE has detected an incoming call signal from the network
NO CARRIER	3	The connection has been terminated or the attempt to establish a connection failed
ERROR	4	Command not recognized, command line maximum length exceeded, parameter value invalid, or other problem with processing the command line
NO DIALTONE	6	No dial tone detected
BUSY	7	Engaged (busy) signal detected
NO ANSWER	8	"@" (Wait for Quiet Answer) dial modifier was used, but remote ringing followed by five seconds of silence was not detected before expiration of the connection timer
CONNECT <TEXT>	Manufacturer -specific	Same as CONNECT, but includes manufacturer-specific text that may specify DTE speed, line speed, error control, data compression, or other status

10.8 ATZ Reset to Default Configuration

Description	*Command*	*Possible Responses*
Execute	ATZ	• OK • ERROR
Execute	ATZ=<profile>	• OK • ERROR
Show if supported and list available parameter range	ATZ=?	Z: (list of supported <profile>s)

This command instructs the DCE to set all parameters to their default values as specified by the user. Consider hardware configuration switches or non-volatile parameter storage (if implemented) when using this command.

Commands included on the same command line as the Z command will be ignored.

<profile >	*Description*
0	Select the user profile to restore

10.9 AT+CMUX Switch to 07.10 Multiplex Protocol

Description	*Command*	*Possible Responses*
Switch to 07.10	AT+CMUX=<transparency>[,<subset>[,<port_speed>[,<N1>[,<T1>[,<N2>[,<T2>[,<T3>[,<k>]]]]]]]]	+CME ERROR: <err>
Returns current setting for multiplexer	AT+CMUX?	• +CMUX:<transparency>,<subset>,<port_speed>,<N1>,<T1>,<N2>,<T2>,<T3>[,<k>] • +CME ERROR: <err>
Show list of supported services	AT+CMUX=?	• +CMUX: (list of supported <transparency>s), (list of supported <subset>s), (list of supported <port_speed>s), (list of supported <N1>s), (list of supported <T1>s), (list of supported <N2>s), (list of supported <T2>s), (list of supported <T3>s), (list of supported <k>) • +CME ERROR: <err>

SI C25-68003

The command is used to turn on the multiplexer. Only “no transparency is supported”. The parameter <k> is not used.

The default values for the parameters below are for “no transparency” and “only UIH frames used”.

<transparency>	*Description*
0	No transparency

<subset>	*Description*
0	Only UIH frames used

<port_speed>	*Description*
1	9600bits/s
2	19200bits/s
3	38400bits/s
4	57600bits/s
5	115200bits/s
6	230400bits/s
7	460800bits/s

<N1>	*Description*
31	Default maximum frame size

<T1>	*Description*
10	100ms default timer

<N2>	*Description*
3	Default maximum number of re-transmissions

<T2>	*Description*
30	300ms default timer

<T3>	*Description*
10	10s default timer

<k>	*Description*
1..7	Window size

10.10 AT+CRES Restore SMS Settings

Description	*Command*	*Possible Responses*
Restore settings	AT+CRES[=<profile>]	• +CMS ERROR: <err> • OK • ERROR
Get available profiles	AT+CRES=?	• +CRES: (list of supported <profile>s) • +CMS ERROR: <err> • OK • ERROR

Restores message service settings from non-volatile memory to active memory. A TA can contain several profiles of settings. Settings specified in commands Service Centre Address +CSCA, Set Message Parameters +CSMP and Select Cell Broadcast Message Types +CSCB (if implemented) are restored. Certain settings, such as SIM SMS parameters, cannot be restored.

<profile>	*Description*
0..2	Profile number where settings are to be stored. **Default value is 0**

10.11 AT+ICF Cable Interface Character Format

Description	*Command*	*Possible Responses*
Defines DTE-DCE character framing	AT+ICF=[format[,parity]]	• OK • ERROR
Read the current setting	AT+ICF?	• +ICF: <format>,<parity> • OK • ERROR
Show if the command is supported	AT+ICF=?	• +ICF: (list of supported <format>s), (list of supported <parity>s) • OK • ERROR

This extended-format compound parameter is used to determine the local serial port start-stop (asynchronous) character framing used by the DCE to accept DTE commands, and while transmitting information text and result code, if this is not automatically determined; **(Not supported)** +IPR=0 forces +ICF=0 (see +IPR).

<format>	*Description*
3	8 Data 1 Stop. **Default value**

<parity>	*Description*
3	Space. **Default value**

10.12 AT+IFC DTE-DCE Local Flow Control

Description	*Command*	*Possible Responses*
Defines DTE-DCE local flow control	AT+IFC**=**[<by_te>, [<by_ta>]]	• OK • ERROR
Read the current setting	AT+IFC?	+IFC: <by_te>,<by_ta>
Show if the command is supported	AT+IFC=?	+IFC: (list of supported <by_te>s,<by_ta>s)

Defines the flow control between the modem and the computer when in on-line data mode.

No flow control is enabled in any of the command modes.

<by_te>	*Description*
0	No flow control on DTE
1	Xon/Xoff flow control on DCE. Control characters are removed by the DCE interface
2	RTS flow control on DCE. **Default value**
3	Xon/Xoff flow control on DCE. Control characters are passed to the remote DCE/DTE

<by_ta>	*Description*
0	No flow control on DCE
1	Xon/Xoff flow control on DTE
2	CTS flow control on DCE. **Default value**

10.13 AT+ILRR Cable Interface Local Rate Reporting

Description	*Command*	*Possible Responses*
Defines DTE-DCE character framing	AT+ILRR=<value>	• OK • ERROR
Read the current setting	AT+ILRR?	+ILRR:<value>
Show if the command is supported	AT+ILRR=?	+ILRR:(list of supported <values>s)

Specifies whether or not the extended-format "+ILRR:<rate>" information text is transmitted from the DCE to the DTE. The <rate> reported shall represent the current (negotiated or renegotiated) DTE-DCE rate. If enabled, the intermediate result code is transmitted after any modulation, error control or data compression reports are transmitted, and before any final result code (e.g. CONNECT) is transmitted. The <rate> is applied after the final result code is transmitted.

<value>	*Description*
0	Disables reporting of local port rate (+ILRR: is not transmitted). **Default value**
1	Enables reporting of local port rate (+ILRR: is transmitted)

10.14 AT+IPR Cable Interface Port Command

Description	*Command*	*Possible Responses*
Defines fixed DTE rate	AT+IPR=[rate]	• OK • ERROR
Read the current setting	AT+IPR?	• +IPR:<rate> • OK • ERROR
Show if the command is supported	AT+IPR=?	• +IPR: (), (list of fixed-only <rate>s)] • OK • ERROR

Specifies the data rate at which the DCE will accept commands, in addition to 1200bits/s or 9600bits/s (as required in v25ter, subclause 4.3). It may be used to select operation at rates used by the DTE, which the DCE is not capable of automatically detecting.

The specified rate takes effect following the issuance of any result code(s) associated with the current command line.

<rate>	*Description*
Discrete integer value	The <rate> value specified shall be the rate in bits per second at which the DTE-DCE interface should operate, e.g. "19200" or "115200". The rates supported by a particular DCE are manufacturer specific. The following rates, are supported; 1200 2400 4800 9600 19200 38400 57600 115200 230400 460800

10.15 AT*E2ESC M2M Escape Sequence Guard Time

Description	*Command*	*Possible responses*
Set GPRS online command guard time	AT*E2ESC=[<gt>]	• OK • ERROR
Read the current setting	AT*E2ESC?	*E2ESC: <gt>
Show if the command is supported	AT*E2ESC=?	• OK • ERROR

Defines a guard time for the escape sequence in GPRS to return to on-line command mode i.e. if +++AT<CR> is received either as part of the data stream or a terminating string from the application and no further data is received for the duration of the guard time the modem will go into on line command mode. This guards against the modem accidentally going into on line command mode. The verbose format of +++AT<CR> is <S2><S2><S2>AT<S3>.

<gt>	*Description*
0	No guard time. **Default value**
1-10	Guard time in seconds

11. Network

*11.1 AT*E2CD Ericsson M2M Cell Description*

Description	*Command*	*Possible Responses*
Request network cell description	AT*E2CD=<n>	• ERROR • OK
Read the command	AT*E2CD?	• *E2CD: <n>,<lac>,<ci>,<ta> • ERROR
Show if the command is supported	AT*E2CD=?	• *E2CD: (list of supported <n>s) • ERROR

Controls the presentation of an unsolicited result code E2CD: when <n>=1, or when there is a change in one of the network cell parameters, E2CD: <lac>,<ci>,<ta>.

Read command returns the status of result code presentation and several values, which show the network cell parameters.

Location information <lac>, <ci> and <ta> are returned only when <n>=1 and the ME is registered in the network. To know if the ME is registered use the AT+CREG command. If the ME is not registered in the cellular network an ERROR message is returned.

<n>	*Description*
0	Disable network location information unsolicited result code. **Default value**
1	Enable network location information unsolicited result code *E2CD: <lac>,<ci>,<ta>

<lac>	*Description*
String type	Two byte location area code in hexadecimal format

<ci>	*Description*
string type	Two byte cell ID in hexadecimal format

<ta>	*Description*
0-63	According to GSM 04.18 V8.6.0, the coding of the timing advance value is the binary representation of the timing advance in bit periods; 1 bit period = 48/13 ìs. <ta> is the integer representation of the timing advance in binary format
64-255	Reserved

11.2 AT*E2EMM Ericsson M2M Engineering Monitoring Mode

Description	*Command*	*Possible Responses*
Set the response presentation mode	AT*E2EMM= <n>[,<m>]	• ERROR • OK
Display mode neighbour cells are taken from the toplist		*E2EMM: Serving Cell MCC,MNC,LAC,CellID,BSIC,Ch[,RxL,C1,C2][,RxLFull,RxLSub,RxQFull,RxQSub,TA,TN], <mcc>,<mnc>,<lac>,<ci>,<bsic>,<ch>[,<rxl>,<c1>,<c2>][,<rxlFull>,<rxlSub>,<rxqfull>,<rxqsub>,<ta>,<tn>], NeighBours Cells MCC,MNC,LAC,CellID,BSIC,Ch,RxL[,C1,C2], <mcc>,<mnc>,<lac>,<ci>,<bsic>,<ch>,<rxl>[,<c1>,<c2>] <mcc>,<mnc>,<lac>,<ci>,<bsic>,<ch>,<rxl>[,<c1>,<c2>] … <mcc>,<mnc>,<lac>,<ci>,<bsic>,<ch>,<rxl>[,<c1>,<c2>] OK
Compact mode. The first cell is the serving cell, the rest are neighbour cells taken from the toplist		*E2EMM: <mcc>,<mnc>,<ci>,<bsic>,<ch>[,<rxl>][,<rxlSub>,<rxqsub>,<ta>],<mcc>,<mnc>,<ci>,<bsic>,<ch>,<rxl>, <mcc>,<mnc>,<ci>,<bsic>,<ch>,<rxl>, … <mcc>,<mnc>,<ci>,<bsic>,<ch>,<rxl> OK
Verbose mode. The first cell is the serving cell and the rest are neighbour cells as provided by the network in the system info. messages (2 and 5) and via the AT*E2NBTS command		*E2EMM: <mcc>,<mnc>,<lac>,<ci>,<bsic>,<ch>[,<rxl>,<c1>,<c2>][,<rxlFull>,<rxlSub>,<rxqfull>,<rxqsub>,<ta>,<tn>], <mcc>,<mnc>,<lac>,<ci>,<bsic>,<ch>,<rxl>[,<c1>,<c2>] <mcc>,<mnc>,<lac>,<ci>,<bsic>,<ch>,<rxl>[,<c1>,<c2>] … <mcc>,<mnc>,<lac>,<ci>,<bsic>,<ch>,<rxl>[,<c1>,<c2>] OK
Reduced display mode - info. as display mode but without text headings or <CR><LF> separators, neighbour cells from top list		*E2EMM: <mcc>,<mnc>,<lac>,<ci>,<bsic>,<ch>[,<rxl>,<c1>,<c2>][,<rxlFull>,<rxlSub>,<rxqfull>,<rxqsub>,<ta>,<tn>], <mcc>,<mnc>,<lac>,<ci>,<bsic>,<ch>,<rxl>[,<c1>,<c2>] <mcc>,<mnc>,<lac>,<ci>,<bsic>,<ch>,<rxl>[,<c1>,<c2>] … <mcc>,<mnc>,<lac>,<ci>,<bsic>,<ch>,<rxl>[,<c1>,<c2>] OK
Read the command	AT*E2EMM?	• *E2EMM: <n> • ERROR
Show if the command is supported	AT*E2EMM= ?	• *E2EMM: (list of supported <n>s),(list of supported <m>s) • ERROR

There are four presentation format modes (Display, Compact, Verbose, and Reduced Display) and two response types (one shot response or continuous unsolicited responses).

The purpose of the presentation format mode Display is to display the data in a readable form, including headers and line breaks (<CR><LF>). This format is, however, not well suited for machine decoding. The formats Verbose, Compact and Reduced Display do not have headers or line breaks. Verbose mode displays more parameters than the compact mode.

The response types give the user the choice of one a shot information or an unsolicited response with <m> seconds between each response.

Examples

AT*E2EMM=1
*E2EMM:<CR><LF>
Serving Cell<CR><LF>
MCC,MNC,LAC,CellID,BSIC,Ch[,RxL,C1,C2][,RxLFull,RxLSub,
RxQFull,RxQSub,TA,TN]<CR><LF>
<mcc>,<mnc>,<lac>,<ci>,<bsic>,<ch>[,<rxl>,<c1>,<c2>][,<rxlFull>,
<rxlSub>,<rxqfull>,<rxqsub>,<ta>,<tn>]<CR><LF>
NeighBours Cells<CR><LF>
MCC,MNC,LAC,CellID,BSIC,Ch,RxL[,C1,C2]<CR><LF>
<mcc>,<mnc>,<lac>,<ci>,<bsic>,<ch>,<rxl>[,<c1>,<c2>]<CR><LF>
<mcc>,<mnc>,<lac>,<ci>,<bsic>,<ch>,<rxl>[,<c1>,<c2>]<CR><LF>
…
<mcc>,<mnc>,<lac>,<ci>,<bsic>,<ch>,<rxl>[,<c1>,<c2>]<CR><LF>
OK

AT*E2EMM=3
*E2EMM: <servcell mcc>,<servcell mnc>,<servcell ci>,
<servcell bsic>,<servcell ch>[,<servcell rxl>][,<servcell rxlSub>,
<servcell rxqsub>,<servcell ta>],<neighborcell1 mcc>,
<neighborcell1 mnc>,<neighborcell1 ci>,<neighborcell1 bsic>,
<neighborcell1 ch>,<neighborcell1 rxl>,<neighborcell2 mcc>,
<neighborcell2 mnc>,<neighborcell2 ci>,<neighborcell2 bsic>,
<neighborcell2 ch>,<neighborcell2 rxl>,
…
<neighborcelln mcc>,<neighborcellnmnc>,<neighborcellnci>,
<neighborcelln bsic>,<neighborcelln ch>,<neighborcelln rxl>
<CR><LF>
OK

AT*E2EMM=5
*E2EMM: <servcell mcc>,<servcell mnc>,<servcell lac>,
<servcell ci>,<servcell bsic>,<servcell ch>[,<servcell rxl>,
<servcell C1>,<servcell C2>][,<servcell rxlFull>,<servcell rxlSub>,
<servcell rxqfull>,<servcell rxqsub>,<servcell tn>,<servcell ta>],

<neighborcell1 mcc>,<neighborcell1 mnc>,<neighborcell1 lac>,
<neighborcell1 ci>,<neighborcell1 bsic>,<neighborcell1 ch>,
<neighborcell1 rxl>[,<neighborcell1 C1>,<neighborcell1 C2>],
<neighborcell2 mcc>,<neighborcell2 mnc>,<neighborcell2 lac>,
<neighborcell2 ci>,<neighborcell2 bsic>,<neighborcell2 ch>,
<neighborcell2 rxl>[,<neighborcell2 C1>,<neighborcell2 C2>],
…
<neighborcelln mcc>,<neighborcellnmnc>,<neighborcelln lac>,
<neighborcelln ci>,<neighborcelln bsic>,<neighborcelln ch>,
<neighborcelln rxl>[,<neighborcelln C1>,<neighborcelln C2>]
<CR><LF>
OK

AT*E2EMM=7
*E2EMM:<servcell mcc>,<servcell mnc>,<servcell lac>,
<servcell ci>,<servcell bsic>,<servcell ch>[,<servcell rxl>,
<servcell c1>,<servcell c2>][,<servcell rxlFull>,<servcell rxlSub>,
<servcell rxqfull>,<servcell rxqsub>,<servcell ta>,<servcell tn>],
<neighborcell1 mcc>,< neighborcell1 mnc>,<neighborcell1 lac>,
<neighborcell1 ci>,<neighborcell1 bsic>,<neighborcell1 ch>,
<neighborcell1 rxl>[,< neighborcell1 c1>,<neighborcell1 c2>],
<neighborcell2 mcc>,<neighborcell2 mnc>,<neighborcell2 lac>,
<neighborcell2 ci>,<neighborcell2 bsic>,<neighborcell2 ch>,
<neighborcell2 rxl>[,<neighborcell2 c1>,<neighborcell2c2>]
…
<neighborcelln mcc>,<neighborcelln mnc>,<neighborcelln lac>,
<neighborcelln ci>,<neighborcelln bsic>,<neighborcelln ch>,
<neighborcelln rxl>[,<neighborcelln c1>,<neighborcelln c2>]
OK

The mode setting <n> in the set command has the combination listed in the table below.

When <n>=5, the shot information is the same as in <n>=1, but neighbouring cells, which have to be up to 16. This is the information that comes from the Serving Cell through the BCCH, reporting the BTS that are on the Serving Cell's surroundings.

<n>	*Description*
0	Disable network monitoring unsolicited result code. **Default value**
1	One shot presentation of the network location information. Display mode with headers and <CR><LF> line separators
2	Enable network location information unsolicited result code in Display mode (like n=1). There will be continuous unsolicited information responses <m> seconds apart
3	One shot presentation of the compact network location information

<n>	*Description*
4	Enable compact network location information unsolicited result code. There will be continuous unsolicited information responses <m> seconds apart
5	One shot presentation of the network location information (verbose format), including 16 BTSs, coming from the Serving Cell signalling information
6	As n=5 format but there will be continuous unsolicited information responses <m> seconds apart
7	One shot presentation of the network information (same information as in n=1) but no headers or <CR><LF> line separators. Neighbor cells from the Toplist
8	As n=7 format but there will be continuous unsolicited information responses <m> seconds apart

<m>	*Description*
1-255	Integer type giving time (in seconds) between unsolicited responses. **Default value is 5**

<mcc>	*Description*
Integer type	Three digits in decimal format. The Mobile Country Code identifies the PLMN serving cell country according to ITU

<mnc>	*Description*
Integer type	Two digits in decimal format. The Mobile Network Code identifies the PLMN operator in the serving cell

<lac>	*Description*
Integer type	Two byte location area code in hexadecimal format

<ci>	*Description*
Integer type	Two byte cell ID in hexadecimal format

<bsic>	*Description*
Integer type	One byte Base Stations Identification code in hexadecimal format

<ch>	*Description*
(0-1023)	It represents the ARFCN that shows the Absolute RF Channel, which identifies the BCCH carrier

<rxl>	Description
Integer type	Received Signal Strength level in dBm measured on idle mode

<rxlfull>	Description
Integer type	Received Signal Strength level in dBm. The Rx Level is taken in the Downlink and statistically is applied to 100 TDMA frames of the TCH or during a SACCH multiframe

<rxlsub>	Description
Integer type	Received Signal Strength level in dBm. The Rx Level is taken from the DownLink signal and the average is applied to subset of SACCH frames

<rxqfull>	Description
0	BER < 0.1%
1	0.26% < BER < 0.30%
2	0.51% < BER < 0.64%
3	1.0% < BER < 1.3%
4	1.9% < BER < 2.7%
5	3.8% < BER < 5.4%
6	7.6% < BER < 11.0%
7	BER > 15.0%

<mcc>	Description
Integer type	Three digits in decimal format. The Mobile Country Code identifies the PLMN serving cell country according to ITU

<rxqsub> is the parameter that indicates the quality in the received signal on dedicated mode. The measurement average is applied to a subset of a SACCH multiframe.

<rxqsub>	Description
0	BER < 0.1%
1	0.26% < BER < 0.30%
2	0.51% < BER < 0.64%
3	1.0% < BER < 1.3%

<rxqsub>	*Description*
4	1.9% < BER < 2.7%
5	3.8% < BER < 5.4%
6	7.6% < BER < 11.0%
7	BER > 15.0%

<c1>	*Description*
Integer	Path Loss criterion parameter for neighbour cells. The MS calculates this parameter, in idle mode, to decide if the cell is suitable to camp on. After the calculation the criterion is C1 > 0. See GSM 05.08

<c2>	*Description*
Integer	Cell reselection parameter for neighbour cells. This parameter shall optimise the selected cell reselection

<ta>	*Description*
0-63	According to GSM 04.18 V8.6.0, the coding of the timing advance value is the binary representation of the timing advance in bit periods; 1 bit period = 48/13 ìs. <ta> is the integer representation of the timing advance in binary format
64-255	Reserved

<tn>	*Description*
0-7	Its value indicates the time slot number in a traffic channel

11.3 AT*E2SPN M2M Service Provider Indication

Description	Command	Possible Responses
Request service provider indication	AT*E2SPN	• *E2SPN: <spi> • +CME ERROR: <err>
Show if the command is supported	AT*E2SPN=?	• OK • ERROR

Causes the MS to return the service provider name stored in the SIM card (<spi> parameter). The text will consist of a maximum of 16 bytes containing the service provider name stored in the EF_{SPN} file in the SIM card (see GSM 11.11). ERROR is returned if the field is not present on the SIM.

<spi>	Description
String	String type field of maximum length 16 bytes; character set as specified by command Select TE character set +CSCS

11.4 AT*EALS Ericsson Request ALS Status

Description	Command	Possible Responses
Requests current status for ALS	AT*EALS	• *EALS: <status> • +CME ERROR: <err> • OK • ERROR
Test if the command is supported	AT*EALS=?	• +CME ERROR: <err> • OK • ERROR

Used to request the MS to give ALS (Alternate Line Services) status. The information is available on the SIM card. If ALS is active, the user has two lines for voice calls. The line number or name tag for the line is then indicated on the display.

<status>	Description
0	ALS function is not active (off)
1	ALS function is active (on)

11.5 AT*ECSP Ericsson Customer Service Profile

Description	*Command*	*Possible Responses*
Read the customer service profile from the SIM	AT*ECSP=<service group>	• *ECSP: <service group>,<services> • +CME ERROR: <err> • OK • ERROR
Test if the command is supported	AT*ECSP=?	• +CME ERROR: <err> • OK • ERROR

This command is used to read the customer service profile (CSP) from the SIM. CSP is a list on the SIM, which indicates the services that are user accessible. Each of the services has a related bit within the CSP. The services are grouped into service groups, with a maximum of 8 services in a group. For each service group, a bit mask tells which services are available (bit=1). Unused bits are set to 0.

<service group>	*Description*
Byte	Each service group has a corresponding number, service group code

<services>	*Description*
byte	Bit mask (8 bits), indicating the services within the service group Bit=0: unused or unavailable service Bit=1: available service

11.6 AT*EPNR Ericsson Read SIM Preferred Network

Description	*Command*	*Possible Responses*
Read entries in SIM preferred list	AT*EPNR=<format> [,<index1> [,<index2]]	• *EPNR: <index1>,<oper1>[...] *EPNR: <index2>, <oper2> • *+CME ERROR: <err>* • *OK* • *ERROR*
Test if the command is supported and list the possible settings	AT*EPNR=?	• *EPNR: (list of supported <index>s), (list of supported <format>s) • *+CME ERROR: <err>* • *OK* • *ERROR*

This command is used to read the SIM preferred list of networks ($EF_{PLMNSEL}$).

<index1>	*Description*
integer	Start index (>0)

<index2>	*Description*
integer	Stop index (>0)

<format>	*Description*
2	Numeric <oper>

<oper>	*Description*
string	String indicates the code for the operator. E.g. GSM - Sweden - Europolitan: “24008” (3 + 2). PCS: 3 digits for country and 3 digits for network

11.7 AT*EPNW Ericsson Write SIM Preferred Network

Description	*Command*	*Possible Responses*
Write/delete entries in SIM preferred list	AT*EPNW=[<index>] [,<format>,<oper>]	• +CME ERROR: <err> • OK • ERROR
Test if the command is supported and list the possible settings	AT*EPNW=?	• *EPNW: (list of supported <index>s), (list of supported <format>)s • +CME ERROR: <err> • OK • ERROR

This command is used to edit the SIM preferred list of networks ($EF_{PLMNSEL}$). The entry field <oper> contains mobile country code (MCC) and mobile network code (MNC).

<index>	*Description*
Integer	Index to entry in SIM preferred list. The SIM preferred list contains at least 8 positions according to GSM 11.11

<format>	*Description*
2	Numeric <oper>

<oper>	*Description*
String	String indicates the code for the operator. E.g. GSM – Sweden - Europolitan: "24008" (3 + 2). PCS: 3 digits for country and 3 digits for network

11.8 AT*E2SSN Ericsson M2M SIM Serial Number

Description	*Command*	*Possible Responses*
Request SIM Serial number	AT*E2SSN?	*E2ESSN: <SSN>
Shows if the command is supported	AT*E2SSN=?	• OK • ERROR

This command requests the SIM serial number held in the ICCid field (address 2FE2) on the SIM and returns all valid characters to the TE. This field is detailed in GSM 11.11 section 10.1.1.

<SSN>	*Description*
String without double quotes	SIM serial number

EXAMPLES

AT*E2SSN?
8944110063503224707
OK

where the raw data contained in the ICCid field on the SIM is 984411003605234207F7.

Test command:

AT*E2SSN=?
OK

11.9 AT*ESLN Ericsson Set Line Name

Description	*Command*	*Possible Responses*
Sets the line name tag in the MS	AT*ESLN=<line> [,<name>]	• +CME ERROR: <err> • OK • ERROR
Read the current setting	AT*ESLN?	• *ESLN: <line1>,<name1><CR><LF> *ESLN: <line2>,<name2> • +CME ERROR: <err> • OK • ERROR
Test if the command is supported and list the possible settings	AT*ESLN=?	• *ESLN: (list of supported <line>s),<lname> • +CME ERROR: <err> • OK • ERROR

Sets the name tag for a selected line.

<line>	*Description*
0	This means that the two lines will use the default name tags, i.e. “L1” and “L2”. **Default value**
1	Line 1
2	Line 2

<name>	*Description*
String	Characters for name tag This parameter is optional when <line> is set to 0

<lname>	*Description*
Integer	Maximum number of characters to use in <name> string (20)

11.10 AT+CIMI Subscriber Identification

Description	*Command*	*Possible Responses*
Read IMSI	AT+CIMI	• <IMSI> • +CME ERROR <err> • OK • ERROR
Show if the command is supported	AT+CIMI=?	• OK • ERROR

Causes the TA to return <IMSI>, identifying the individual SIM attached to the ME.

<IMSI>	*Description*
string without double quotes	International Mobile Subscriber Identity

11.11 AT+CLCK Facility Lock

Description	*Command*	*Possible Responses*
Request facility lock	AT+CLCK=<fac>, <mode>[,<passwd> [,<class>]]	• when <mode>=2 and command successful: +CLCK: <status>[,<class1> [<CR><LF>+CLCK: <status>,<class2>[...]] • +CME ERROR <err> • OK • ERROR
Show if the command is supported	AT+CLCK=?	• +CLCK: (list of supported <fac>s) • +CME ERROR <err> • OK

The command is used to lock, unlock or interrogate an ME or a network facility <fac>. A password is normally needed to carry out such actions.

Call barring facilities are based on GSM supplementary services (refer to GSM 02.88). The interaction of these, with other commands based on other GSM supplementary services, is described in the GSM standard.

<fac>	*Description*
"CS"	CNTRL (lock CoNTRoL surface (e.g. phone keyboard))
"PS"	PH-SIM (lock PHone to SIM card) (ME asks password when other than current SIM card inserted)
"SC"	SIM (lock SIM card) (SIM asks password in ME power-up and when this lock command issued)
"FD"	SIM fixed dialling feature. PIN2 is required as a password
"P2"	SIM PIN2

<fac>	Description
“AO”	BAOC (bar all outgoing calls)
“OI”	BOIC (bar outgoing international calls)
“AI”	BAIC (bar all incoming calls)
“IR”	BIC-Roam (bar incoming calls when roaming outside the home country)
“OX”	BOIC-exHC (bar outgoing international calls except to home country)
“AB”	All barring services
“AG”	All out going barring services
“AC”	All in coming barring services
“PN”	Network personalization
“PU”	Network subset personalization
“PP”	Service provider personalization
“PC”	Corporate personalization

<mode>	Description
0	Unlock
1	Lock
2	Query status
10	Full lock (only valid for <fac>=“PS”, after power on always ask for password)

<status>	Description
0	Not active
1	Active

<passw>	Description
string type	Is the same as password specified for the facility from the ME user interface or with change password command, +CPWD

<classx>	Description
1	Voice L1
2	Data
4	Fax
8	Short message service

<classx>	*Description*
16	Data circuit sync
32	Data circuit async
64	Dedicated packet access
128	Voice L2
1..30	When "no reply" is enabled or queried, this gives the time in seconds to wait before the call is forwarded. **Default value is 20**

11.12 AT+CNUM Subscriber Number

Description	*Command*	*Possible Responses*
Request subscriber number	AT+CNUM	• +CNUM: [<alpha1>],<number1>,<type1> [,<speed>,<service>[,<itc>]][<CR> <LF>+CNUM: [<alpha2>],<number2>,<type2> [,<speed>,<service> [,<itc>]][…]] • +CME ERROR: <err> • OK • ERROR
Show if the command is supported	AT+CNUM=?	• +CME ERROR: <err> • OK • ERROR

This command returns the MSISDNs related to the subscriber (this information can be stored in the SIM or in the ME). If subscriber has different MSISDN for different services, each MSISDN is returned in a separate line.

<alphax>	*Description*
Alphanumeric string	Associated with <numberx>; used character set should be the one selected with the Select TE character set command, +CSCS

<numberx>	*Description*
String type	Phone number of format specified by <typex>

<typex>	*Description*
Integer format	Type of address, (refer to GSM 04.08 subclause 10.5.4.7)

<speed>	*Description*
data rate	As defined in subclause 6.7 GSM 07.07

<service>	Description
0	Asynchronous modem
4	Voice
5	Fax

<itc>	Description
0	3.1 kHz
1	UDI

11.13 AT+COLP Connected Line Identification Presentation

Description	Command	Possible Responses
Request connected line identification presentation	AT+COLP=[<n>]	• OK • ERROR
Show the current setting	AT+COLP?	• +COLP: <n>,<m> • OK • ERROR
Show if the command is supported	AT+COLP=?	• +COLP: (list of supported <n>s) • OK • ERROR

This command refers to the GSM/UMTS supplementary service COLP (Connected Line Identification Presentation) that enables a calling subscriber to get the connected line identity (COL) of the called party after setting up a mobile originated call. The command enables or disables the presentation of the COL at the TE. It has no effect on the execution of the supplementary service COLR in the network.

When enabled (and allowed by the called subscriber), +COLP: <number>,<type>[,<subaddr>,<satype> [,<alpha>]] intermediate result code is returned from the TA to the TE before any +CR or V.25ter responses. It is manufacturer specific if this response is used when normal voice call is established.

Read command gives the status of <n>, and also triggers an interrogation of the provision status of the COLP service according 3GPP TS 22.081 (given in <m>).

Test command returns values supported by the TA as a compound value.

<n>	*Description*
0	Disable
1	Enable

<m>	*Description*
0	COLP not provisioned
1	COLP provisioned
2	unknown (e.g. no network, etc.)

Intermediate Result codes:

+COLP: <number>,<type>[,<subaddr>,<satype> [,<alpha>]]

11.14 AT+COPS Operator Selection

Description	*Command*	*Possible Responses*
Request operator selection	AT+COPS=[<mode> [,<format> [,<oper>]]]	• +CME ERROR <err> • OK • ERROR
Shows the current setting	AT+COPS?	• +COPS: <mode>[,<format>, <oper>] • +CME ERROR <err> • OK • ERROR
Show if the command is supported	AT+COPS=?	• +COPS: list of supported (<stat>,long alphanumeric <oper>, short alphanumeric <oper>,numeric <oper>)s • +CME ERROR <err> • OK • ERROR

Forces an attempt to select and register the GSM network operator.

<mode>	*Description*
0	Automatic (<oper> field is ignored)
1	Manual (<oper> field present)
3	Set only <format> (for read command +COPS?), do not attempt registration/de-registration (<oper> field is ignored); this value is not applicable in read command response
4	Manual/automatic (<oper> field present); if manual selection fails, automatic mode (<mode>=0) is entered

<format>	*Description*
0	Automatic (<oper> field is ignored)
1	Short format alphanumeric <oper>
2	Numeric <oper>

<oper>	*Description*
string type	Format determined by the <format> setting

<stat>	*Description*
0	Unknown
1	Available
2	Current
3	Forbidden

11.15 AT+CREG Network Registration

Description	*Command*	*Possible Responses*
Request network registration	AT+CREG=[<n>]	• +CME ERROR <err> • OK • ERROR
Read the command	AT+CREG?	• +CREG: <n>,<stat> • +CME ERROR <err> • OK • ERROR
Show if the command is supported	AT+CREG=?	• +CREG: (list of supported <n>s) • +CME ERROR <err> • OK • ERROR

Set command controls the presentation of an unsolicited result code +CREG: <stat> when <n>=1 and there is a change in the ME network registration status.

Read command returns the status of result code presentation and an integer <stat>, which shows whether the network has currently indicated the registration of the ME.

Controls the presentation of the unsolicited result code +CREG.

<n>	*Description*
0	Disable network registration unsolicited result code. **Default value**
1	Enable network registration unsolicited result code

<stat>	*Description*
0	Not registered, ME is not currently searching for a new operator to register with
1	Registered, home network

<stat>	Description
2	Not registered, but ME is currently searching for a new operator to register with
3	Registration denied
4	Unknown
5	Registered, roaming

11.16 AT*ECPI Ciphering Indicator

Description	Command	Possible Responses
Request activation of the ciphering indication	AT*ECPI=<switch>	• OK • +CME: <error> • ERROR
Shows the current setting	AT*ECPI?	• *ECPI: <switch> • OK • ERROR
Show if the command is supported	AT*ECPI=?	• *ECPI: (list of supported <switch>es values) • OK • ERROR

This command allows the external application to activate/deactivate the ciphering indication. The ciphering indication allows the external application to detect when the mobile connection becomes deciphered and thus unsecured.

Test command gives the current value of the <switch> parameter, informing if the indicator is enabled or disabled.

The ciphering indicator feature may be disabled by the home network operator setting data in the “administrative data” field (EFAD) in the SIM as defined in GSM 11.11.

If this feature is not disabled by the SIM, then whenever a connection is in place, which is or becomes deciphered, an indication is given via the unsolicited result code *ECPV:<ciphering>.

<switch>	Description
1	Ciphering indication is on. The unsolicited result code *ECPV is sent anytime the communication is unsecured and when it becomes secure again
0	Ciphering indication is off. Disable the ciphering indication, *ECPV is not sent

Unsolicited Result Codes:

*ECPV: <ciphering>. Sent only when <switch> is set to 0.

Unsolicited Result Codes

*ECPV - Ciphering Indicator

SYNTAX - Unsolicited Result code

Description	*Response*	*When*
Set command informs the TE when a communication is unsecured due to the fact that the network is not enciphering the communication	*ECPV: <ciphering>	When AT*ECPI enables it, the *ECPV:<ciphering> is sent during a connection whenever the communication is not enciphered. If a connection becomes secure after that, the *ECPV:<ciphering> is sent again to indicate that now the communication is enciphered

<ciphering>	*Description*
0	The connection is secured. The network enciphers the communication
1	The connection is unsecured. The network does not encipher the communication

11.17 AT*E2NBTS Ericsson M2M Neighbour BTS

Description	*Command*	*Possible Responses*
Set Neighbour Cells to monitor	AT*E2NBTS=<ch1>,<bsic1>[,<ch2>,<bsic2>[,<ch3>,<bsic3>[,<ch4>,<bsic4>[,<ch5>,<bsic5>[,<ch6>,<bsic6>[,<ch7>,<bsic7>[,<ch8>,<bsic8>[,<ch9>,<bsic9>[,<ch10>,<bsic10>[,<ch11>,<bsic11>[,<ch12>,<bsic12>[,<ch13>,<bsic13>[,<ch14>,<bsic14>[,<ch15>,<bsic15>[,<ch16>,<bsic16>]]]]]]]]]]]]]]]]	• ERROR • OK
Read the monitored neighbour cells	AT*E2NBTS?	• *E2NBTS: <mcc>,<mnc>,<ci>,<bsic>,<ch>,<rxl><CR><LF> <mcc>,<mnc>,<ci>,<bsic>,<ch>,<rxl><CR><LF> … <mcc>,<mnc>,<ci>,<bsic>,<ch>,<rxl><CR><LF> <CR><LF> • OK • ERROR
Show if the command is supported	AT*E2NBTS=?	• *E2NBTS: (list of supported <ch>s) • ERROR

The set command shall provide with the ARFCNs (<ch>) and the BSIC (the BSIC is a cell colour code) to the MS in order to monitor those channels, belonging to the neighbour cells, instead of the ones that come through the air interface, in the serving cell information broadcast channel.

It is possible to update that information with up to 16 neighbour cells. If less than 16 <ch>s are provided, then the assigned channels shall substitute the last previous channel (given either by the BCCH or by another AT*E2NBTS command), if it is not in the list yet. Therefore, <ch1>,<bsic1> will substitute BTS 16 in the MS, <ch2>,<bsic2> to the BTS 15 and so on. If any of the <ch>s is already in the top-list, then it is skipped.

The read command displays the data of every neighbour cell, including the following parameters: MCC, MNC, Cell ID, BSIC, Channel and Rx Level.

<ch>	*Description*
(0-1023)	It represents the ARFCN that shows the Absolute RF Channel, which identifies a BCCH carrier

<mcc>	*Description*
String Type	Three digits in decimal format. The Mobile Country Code identifies the PLMN serving cell country according to ITU

<mnc>	*Description*
String Type	Two digits in decimal format. The Mobile Network Code identifies the PLMN operator in the serving cell

<ci>	*Description*
String type	Two byte cell ID in hexadecimal format

<bsic>	*Description*
String Type	One byte Base Stations Identification code in hexadecimal format

<rxl>	*Description*
String Type	Received Signal Strength level in dBm, measured in idle mode

12. Phonebook

12.1 AT*E2PBCS Ericsson M2M Phonebook Check Sum

Description	*Command*	*Possible Responses*
Request phone book checksum	AT*E2PBCS	• *E2PBCS: <cks> • +CME ERROR: <err>
Show if the command is supported	AT*E2PBCS=?	• OK • ERROR

Command causes the ME to return the phone book checksum <cks> stored internally . Phone book checksum is recalculated whenever there is a change in the phone book. By requesting the checksum, the external application can detect if the phone book in the ME has changed, without downloading the whole phone book.

During the SIM initialisation process, it takes some time to download the phone book from the SIM card to the ME, depending on the number of entries. In case the command is invoked before the checksum has been calculated, the ME gives an ERROR message.

<cks>	*Description*
Hex type	1 byte in hexadecimal (between “”), containing the checksum

12.2 AT*ESAG Ericsson Add to Group

Description	*Command*	*Possible Responses*
Adds a new item to the group with <gindex>	AT*ESAG=<gindex>, <type>, <itemindex>	• +CME ERROR: <err> • OK • ERROR
Show if the command is supported and list the possible settings	AT*ESAG=?	• *ESAG: (list of supported <gindex>s, list of supported <type>s • OK • ERROR

This command adds a contact or a phone number to the current group.

<gindex>	*Description*
1-10	The group index within the hierarchical phone book

<type>	*Description*
1	Contact
2	Phone number

<itemindex>	*Description*
Integer	The index of the contact/group/phone number to add. The <itemindex> parameter has the following meaning: if the item to add is a contact, the <itemindex> is the index of the contact in the contacts book. If the item to add is a phone number the <itemindex> is the index in the phone book

12.3 AT*ESCG Ericsson Create Group

Description	*Command*	*Possible Responses*
Adds a new group to the hierarchical phone book	AT*ESCG=<name>	• +CME ERROR: <err> • OK • ERROR
Shows if the command is supported	AT*ESCG=?	• *ESCG: <maxnamelength> • +CME ERROR: <err> • OK • ERROR

This command creates a new group in the hierarchical phone book. The group is stored at the first available position. There are 10 group positions in the hierarchical phone book.

<name>	*Description*
String	The group name. Character set as specified by command Select TE Character Set (AT+CSCS)

<maxnamelength>	*Description*
integer	The maximum length of the grouping (bytes)

12.4 AT*ESCN Ericsson Set Credit Card Number

Description	*Command*	*Possible Responses*
Set up a credit card number	AT*ESCN=<mode> [,<passwd>][,<indexn>] [,<asn>,<type>,<name>, <vercode>[,<send order>]]	• +CME ERROR: <err> when mode=3:*ESCN: <indexn>,<asn>,<type>, <name>,<vercode>, <send order> When mode=4:*ESCN: <selindexn> • OK • ERROR
Test if the command is supported	AT*ESCN=?	• *ESCN: (list of supported <index>s),(list of supported <mode>s),(list of supported <send order>s) • +CME ERROR: <err> • OK • ERROR

Command is used to:

- set up a credit card number in the ME.
- disable credit card calls.
- enable one of the credit card call services.
- query the settings for one of the services.
- query the active credit call access server.

<mode>	*Description*
0	Settings for a credit card call (<passwd>, <indexn>, <asn>,<type>,<name>,<vercode> [,<send order>]). The four (4) parameters (<passwd>, <indexn>, <asn>, <vercode>) are mandatory when <mode>=0. If all those are not submitted ERROR will be returned
1	Disable credit card calling (<passwd>). If any other parameters are submitted, they are ignored
2	Enable one of the credit card call services (<passwd>, <indexn>). If any other parameters are submitted, they are ignored
3	Query (<passwd>, <indexn>). If any other parameters are submitted, they are ignored
4	Query for the selected credit call access server. If any parameters are submitted, they are ignored

<passwd>	*Description*
String	character string, phone lock code “PS”, PH-SIM

<indexn>	*Description*
1	Index number to the first credit card call access server
2	Index number to the second credit card call access server

<selindexn>	*Description*
0	Credit card calling disabled
1	Index number to the first credit card call access server
2	Index number to the second credit card call access server

<asn>	*Description*
String	Character string <0..9,+>, max. 20 characters Phone number of format specified by <typex>

<type>	*Description*
Integer format	Type of address

<name>	*Description*
String	Character string of the name tag, for M&M. Maximum of 18 characters

<vercode>	*Description*
String	Character string <0..9,#,*>. Maximum of 20 characters

<send order>	*Description*
1	Verification code first. **Default value**
2	phone number to call first

12.5 AT*ESDG Ericsson Delete Group

Description	*Command*	*Possible Responses*
Deletes a group defined in the hierarchical phone book	AT*ESDG=<gindex>	• +CME ERROR: <err> • OK
Show if the command is supported and list the possible <gindex>	AT*ESDG=?	• *ESDG: list of <gindex>s • OK

This command deletes the group at position <gindex> from the hierarchical phone book.

<gindex>	*Description*
1-10	The group index

12.6 AT*ESDI Ericsson Delete Group Item

Description	*Command*	*Possible Responses*
Deletes the item in group <gindex> with position <index>	AT*ESDI=<gindex>,<index>	• +CME ERROR: <err> • OK • ERROR
Show if the command is supported	AT*ESDI=?	• +CME ERROR: <err> • OK • ERROR

The command deletes the item with <index> in the group with <gindex>.

<gindex>	*Description*
1-10	The groups index within the hierarchical phone book

<index>	*Description*
1-15	The items index within the group

12.7 AT*ESGR Ericsson Group Read

Description	*Command*	*Possible Responses*
Lists the groups defined in the hierarchical phone book	AT*ESGR	• *ESGR: <gindex1>, <name1>[<CR><LF> <gindex2>, <name2>..] • OK • ERROR
Shows if the command is supported	AT*ESGR=?	OK

This command lists the groups in the hierarchical phone book.

<gindex>	*Description*
1-10	The group index

<name>	*Description*
String	The group name

12.8 AT*EGIR Ericsson Group Item Read

Description	*Command*	*Possible Responses*
Lists the items in the <gindex> group	AT*EGIR=<gindex>	• *EGIR: <index1>, <type1>,<itemindex> [<CF><LF><index2>, <type2>, <itemindex> [...]] • OK • ERROR
Show if the command is supported	AT*EGIR=?	• OK • ERROR

This command lists the items stored in the group identified by <gindex>.

<gindex>	*Description*
1-10	The groups index within the hierarchical phonebook

<index>	*Description*
1-15	The items index within the group

<type>	*Description*
Integer	The kind of item. See AT*ESAG <item> table for definition

<itemindex>	*Description*
Integer	The item's index within the phonebook/contacts/group

12.9 AT*ESNU Ericsson Settings Number

Description	*Command*	*Possible Responses*
Sets a number in the MS	AT*ESNU=<type>, <number>[,<number type>]	• +CME ERROR: <err> • OK • ERROR
Test if the command is supported and show possible settings	AT*ESNU=?	• *ESNU: (list of supported <type>s) • +CME ERROR: <err> • OK • ERROR
Read the current setting	AT*ESNU?	• *ESNU: <type 1>, <number 1>, <number type 1> <CR><LF> ….*ESNU: <type n>, <number n>, <number type n> • +CME ERROR: <err> • OK • ERROR

This command sets a <type> number, in the format <number type>, in the MS.

<type>	*Description*
0	Voice L1
1	Voice L2
2	Fax
3	Data

<number type>	*Description*
129	Default value when dialling string does not include the international access code character '+'
145	Default value when dialling string includes the international access code character '+'

<number>	*Description*
0-9, +	Number

12.10 AT+CPBF Phonebook Find

Description	*Command*	*Possible Responses*
Shows the current setting	+CPBF=<findtext>	• +CPBF: <index1>,<number>,<type>, <text>[[...]<CR><LF>+CBPF: <index2>,<number>,<type>, <text>] • +CME ERROR: <err> • OK • ERROR
Show if the command is supported	+CPBF=?	• +CPBF: <nlength>,<tlength> • +CME ERROR: <err> • OK • ERROR

Returns phone book entries whose alphanumeric field starts with <findtext>. Only currently selected source will be searched for,

<findtext>	*Description*
string type	Field of maximum length <tlength>; character set as specified by the select TE character set command, +CSCS

12.11 AT+CPBR Phonebook Read

Description	*Command*	*Possible Responses*
Read phone book entries	+CPBR=<index1> [,<index2>]	• +CPBR:<index1>,<number>, <type>,<text>[[,<text_date>, <text_time>]<CR><LF>+CPBR: <index2>,<number>,<type>, <text>[,<text_date>, <text_time>]] • +CME ERROR <err> • OK • ERROR
Test if the command is supported	+CPBR=?	• +CPBR: (list of supported <index>s),<nlength>,<tlength> • +CME ERROR <err> • OK • ERROR

Returns phone book entries in location number range <index1>... <index2> from the current phone book memory storage selected with +CPBS. If <index2> is left out, only location <index1> is returned. Entry fields returned are location number <indexn>, phone number stored there <number> (of format <type>) and text <text> associated with the number.

<indexn>	*Description*
integer type	Values in the range of location numbers of phone book memory

<number>	*Description*
string type	Phone number of format <type>

<type>	*Description*
129	ISDN/telephony numbering plan, national/international unknown
145	ISDN/telephony numbering plan, international number
161	ISDN/telephony numbering plan, national number
128 - 255	Other values refer to GSM 04.08 section 10.5.4.7

<text>	*Description*
string type	Field of maximum length <tlength>; character set as specified by the select TE character set command, +CSCS.

<nlength>	*Description*
integer type	Value indicating the maximum length of field <number>

<tlength>	*Description*
integer type	Value indicating the maximum length of field <text>

12.12 AT+CPBS Phone Storage

Description	*Command*	*Possible Responses*
Set phone book storage	AT+CPBS=<storage> [,<password>]	• +CME ERROR <err> • OK • ERROR
Read the current setting	AT+CPBS?	• +CPBS: <storage> • +CME ERROR <err> • OK • ERROR
Test if the command is supported	AT+CPBS=?	• +CPBS: (list of supported <storage>s) • +CME ERROR <err> • OK • ERROR

Selects phone book memory storage <storage>, which is used by other phone book commands. Read command returns currently selected memory, and when supported by manufacturer, number of used locations and total number of locations in the memory.

<storage>	*Description*
"FD"	Fixed dialled numbers
"EN"	Emergency numbers
"ME"	ME phone book
"SM"	SIM phone book
"DC"	ME dialled calls list (30 entries)
"RC"	ME received calls list (30 entries)
"MC"	ME missed calls list (30 entries)

<passwd>	*Description*
String type	Represents the password required when selecting password protected <storage>s, for example PIN2 for storage "ME"

12.13 AT+CPBW Phonebook Write

Description	*Command*	*Possible Responses*
Request phone book write	AT+CPBW=[<index>] [, <number>[,<type> [,<text>]]]	• +CME ERROR <err> • OK • ERROR
Show if the command is supported	AT+CPBW=?	• +CPBW: (list of supported <index>s),<nlength> ,(list of supported <type>s),<tlength> • +CME ERROR <err> • OK • ERROR

Writes phone book entry in location number <index> in the current phone book memory storage area, selected with AT+CPBS. If the <number> and <text> parameters are omitted, the entry is deleted. If <index> is omitted but <number> is included, the entry is written to the first free location in the phone book.

<index>	*Description*
integer type	Values in the range of location numbers of phone book memory

<number>	*Description*
string type	Phone number of format <type>

<type>	*Description*
integer format	Type of address octet, default 145 when dialing string includes international access code character "+", otherwise 129. (refer to GSM 04.08 subclause 10.5.4.7)
129	ISDN/telephony numbering plan, national/international unknown
145	ISDN/telephony numbering plan, international number
161	ISDN/telephony numbering plan, national number
128-255	Other values refer GSM 04.08 section 10.5.4.7

<text>	*Description*
string type	Field of maximum length <tlength>; character set as specified by the select TE character set command, +CSCS

<nlength>	*Description*
integer type	Value indicating the maximum length of field <number>

<tlength>	*Description*
integer type	Value indicating the maximum length of field <text>

13. Short Message Services - Point to Point

13.1 AT+CPIN PIN Control

See 3.23, AT+CPIN PIN Control

13.2 AT+CGSMS Select Service for MO SMS Messages

See 6.10, AT+CGSMS Select Service for MO SMS Messages

13.3 AT+CPMS Preferred Message Storage

Common for both PDU (Protocol Data Unit) and Text Modes

Description	*Command*	*Possible Responses*
Set preferred message storage	AT+CPMS=<mem1> [,<mem2>] [,<mem3>]	• +CPMS: <used1>,<total1>,<used2>, <total2>,<used3>,<total3> • *+CMS ERROR: <err>* • OK • ERROR
Read the command	AT+CPMS?	• +CPMS: <mem1>,<used1>,<total1, <mem2>,<used2>,<total2, <mem3>,<used3>,<total3> • *+CMS ERROR: <err>* • OK • ERROR
Show if the command is supported	AT+CPMS=?	• +CPMS: (list of supported <mem1>s),(list of supported <mem2>s),(list of supported <mem3>s) • OK • ERROR

Selects memory storage <mem1>, <mem2> and <mem3> to be used for reading, writing, etc. If chosen storage is not appropriate for the ME (but is supported by the TA), final result code +CMS ERROR: <err> is returned.

Test command returns lists of memory storage supported by the TA.

<mem1>	*Description*
string type	Memory from which messages are read and deleted (commands List Messages +CMGL, Read Message +CMGR and Delete Message +CMGD)
"ME"	ME message storage
"SM"	SIM message storage. **Default value**

<mem2>	*Description*
string type	Memory to which writing and sending operations are made (commands Send Message from Storage +CMSS and Write Message to Memory +CMGW)
"ME"	ME message storage
"SM"	SIM message storage

<mem3>	*Description*
string type	Memory to which received SMs are preferred to be stored (unless forwarded directly to TE). Received CBMs are always stored in "BM" (or some manufacturer specific storage) unless directly forwarded to TE
"ME"	ME message storage
"SM"	SIM message storage

<used1>,<used2>,<used3>	*Description*
integer type	Total number of messages currently in <mem1>, <mem2> and <mem3> respectively

<total1>,<total2> ,<total3>	*Description*
integer type	Total number of message locations in <mem1>, <mem2> and <mem3> respectively

13.4 AT+CSCA Service Centre Address

Common for both PDU and Text Modes

Description	*Command*	*Possible Responses*
Set service centre address	AT+CSCA=<sca> [,<tosca>]	• OK • ERROR
Show the current setting	AT+CSCA?	• +CSCA: <sca>,<tosca> • OK • ERROR
Show if the command is supported	AT+CSCA=?	• OK • ERROR

Updates the SMSC address, through which mobile originated SMs are transmitted. In text mode, the setting is used by send (+CMGS) and write (+CMGW) commands. In PDU mode, the setting is used by the same commands, but only when the length of the SMSC address coded into <pdu> parameter equals zero. Note that a "+" in front of the number in <sca> has precedence over the <tosca> parameter, so that a number starting with "+" will always be treated as an international number.

<sca>	*Description*
string type	GSM 04.11 (3G TS 24.011) RP SC address Address-Value field in string format; BCD numbers (or GSM default alphabet characters) are converted to characters of the currently selected TE character set

<tosca>	*Description*
integer type	GSM 04.11 (3G TS 24.011) RP SC address type-of-address octet in integer format
129	ISDN/telephony numbering plan, national/international unknown
145	ISDN/telephony numbering plan, international number
161	ISDN/telephony numbering plan, national number
128-255	Other values refer GSM 04.08 section 10.5.4.7

13.5 AT+CMGF Message Format

Common for both PDU and Text Modes

Description	Command	Possible Responses
Set message format	AT+CMGF=<mode>	• OK • ERROR
Read the current setting	AT+CMGF?	• +CMGF: <mode> • OK • ERROR
Show if the command is supported	AT+CMGF=?	• +CMGF: (list of supported <mode>s) • OK • ERROR

This command tells the TA, which input and output format to use for messages. The <mode> parameter indicates the format of messages used with send, list, read and write commands, and unsolicited result codes resulting from received messages. Mode can be either PDU mode (entire TP data units used) or text mode (headers and body of the messages given as separate parameters).

Test command returns supported modes as a compound value.

<mode>	Description
0	PDU mode
1	Text mode

13.6 AT+CMGW Write Message to Memory

PDU Mode

Description	Command	Possible Responses
Write message to memory	AT+CMGW=<length> [,<stat>]<CR> ***PDU is given***<ctrl-Z/ESC>	• +CMGW: <index> • +CMS ERROR: <err> • OK • ERROR
Show if the command is supported	AT+CMGW=?	• OK • ERROR

Stores a message to memory storage <mem2>. Memory location <index> of the stored message is returned. By default message status will be set to 'stored unsent', but parameter <stat> allows other status values to be given. ME/TA manufacturer may choose to use different default <stat> values for different message types. Entering PDU is the

same as specified by the send message command, +CMGS. If writing fails, final result code +CMS ERROR: <err> is returned. See “AT+CPMS Preferred Message Storage”, page 179.

<stat>	*Description*
2	Stored unsent message (only applicable to SMs)

<index>	*Description*
Integer type	Value in the range of location numbers supported by the associated memory

<length>	*Description*
Integer type	Value indicating in PDU mode (+CMGF=0), the length of the actual TP data unit in octets (i.e. the RP layer SMSC address octets are not counted in the length)

<pdu>	*Description*
...	In the case of SMS: GSM 04.11 SC address followed by GSM 03.40 TPDU in hexadecimal format: ME/TA converts each octet of TP data unit into two IRA character long hexadecimal number (e.g. octet with integer value 42 is presented to TE as two characters 2A (IRA 50 and 65)) In the case of CBS: GSM 03.41 TPDU in hexadecimal format

Text Mode

Description	*Command*	*Possible Responses*
Write message to memory	AT+CMGW [=<oa/da> [,<tooa/toda>[,<stat>]]] <CR> ***Text is entered*** <ctrl-Z/ESC>	• +CMGW: <index> • +CMS ERROR: <err> • OK • ERROR
Show if the command is supported	AT+CMGW=?	• OK • ERROR

Stores message (either SMS-DELIVER or SMS-SUBMIT) to memory storage <mem2>. Memory location <index> of the stored message is returned. By default message status will be set to ‘stored unsent’, but parameter <stat> allows also other status values to be given. The entering of text is done as specified in the send message command, +CMGS. If writing fails, final result code +CMS ERROR: <err> is returned.

Note! SMS-COMMANDs and SMS-STATUS-REPORTs cannot be stored in text mode.

<stat>	*Description*
2	Stored unsent message (only applicable to SMs)

<oa>	*Description*
String type	GSM 03.40 TP-Originating-Address Value in string format; BCD numbers (or GSM default alphabet characters) are converted to characters of the currently selected TE character (refer command +CSCS). Type of address given by <tooa>

<da>	*Description*
String type	GSM 03.40 TP-Destination-Address Value in string format; BCD numbers (or GSM default alphabet characters) are converted to characters of the currently selected TE character (refer command +CSCS). Type of address given by <toda>

<tooa>	*Description*
String type	GSM 04.11 TP-Originating-Address Type-of-Address octet in integer format (default refer <toda>)

<toda>	*Description*
String type	GSM 04.11 TP-Destination- Address Type-of-Address octet in integer format (when first character of <da> is +(IRA 43) default is 145, otherwise default is 129

<index>	*Description*
Integer type	Value in the range of location numbers supported by the associated memory

13.7 AT+CMGS Send Message

PDU Mode

Description	*Command*	*Possible Responses*
Send message	AT+CMGS=<length> <CR> ***PDU is given***<ctrl-Z/ESC>	• +CMGS: <mr>[,<ackpdu>] • +CMS ERROR: <err> • OK • ERROR
Show if the command is supported	AT+CMGS=?	• OK • ERROR

Sends a message from a TE to the network (SMS-SUBMIT). Message reference value <mr> is returned to the TE on successful message delivery. Optionally, when AT+CSMS <service> value is 1 and there is network support, <ackpdu> is returned. Values can be used to identify message upon unsolicited delivery status report result code. If sending fails in a network or an ME error, final result code +CMS ERROR: <err> is returned. This command is abortable.

- <length> must indicate the number of octets coded in the TP layer data unit to be given (i.e. SMSC address octets are excluded).
- The TA shall send a four character sequence <CR><LF><greater_than><space> (IRA 13, 10, 62, 32) after command line is terminated with <CR>; after that PDU can be given from TE to ME/TA.
- The DCD signal is in the ON state as PDU is given.
- The echoing of given characters back from the TA is controlled by V.25ter echo command E.
- The PDU shall be hexadecimal format (similarly as specified for <pdu>) and given in one line; ME/TA converts this coding into the actual octets of PDU.
- When the length octet of the SMSC address (given in the <pdu>) equals zero, the SMSC address set with command Service Centre Address +CSCA is used.
- Sending can be cancelled by giving <ESC> character (IRA 27).
- <ctrl-Z> (IRA 26) must be used to indicate the ending of PDU.

<mr>	*Description*
Integer type	GSM 03.40 TP-Message-Reference in integer format

<length>	*Description*
Integer type	Value indicating in PDU mode (+CMGF=0), the length of the actual TP data unit in octets (i.e. the RP layer SMSC address octets are not counted in the length)

<ackpdu>	*Description*
...	GSM 03.40 RP-User-Data element of RP-ACK PDU; format is same as for <pdu> in case of SMS, but without GSM 04.11 SC address field and parameter shall be bounded by double quote characters like a normal string type parameter

Text Mode

Description	*Command*	*Possible Responses*
Send message	AT+CMGS=<da> [,<toda>] <CR> ***Text is entered***<ctrl-Z/ESC>	• +CMGS: <mr>[,<scts>] • +CMS ERROR: <err> • OK • ERROR
Show if the command is supported	AT+CMGS=?	• OK • ERROR

Sends a message from a TE to the network (SMS-SUBMIT). Message reference value <mr> is returned to the TE on successful message delivery. Optionally, when AT+CSMS <service> value is 1 and there is network support, <scts> is returned. Values can be used to identify message upon unsolicited delivery status report result code. If sending fails in a network or an ME error, final result code +CMS ERROR: <err> is returned. This command is abortable.

- The entered text (GSM 03.40 TP-Data-Unit) is sent to address <da> and all current settings (refer Set Text Mode Parameters +CSMP and Service Centre Address +CSCA) are used to construct the actual PDU in the ME/TA.
- The TA shall send a four character sequence <CR><LF><greater_than><space> (IRA 13, 10, 62, 32) after the command line is terminated with <CR>; after that text can be entered from the TE to the ME/TA.
- The DCD signal is in the ON state as text is entered.
- The echoing of entered characters back from the TA is controlled by V.25ter echo command E.
- The entered text should be formatted as follows:

  if <dcs> (set with +CSMP) indicates that GSM 03.38 default alphabet is used and <fo> indicates that GSM 03.40 TP-User-Data-Header-Indication is not set:

    if TE character set other than "HEX" (refer command Select TE Character Set +CSCS in TS 07.07): ME/TA converts the entered text into GSM alphabet according to rules of Annex A; backspace can be used to delete last character and

carriage returns can be used (previously mentioned four character sequence shall be sent to the TE after every carriage return entered by the user);

if TE character set is “HEX”: the entered text should consist of two IRA character long hexadecimal numbers which ME/TA converts to 7-bit characters of GSM alphabet (e.g. 17 (IRA 49 and 55) will be converted to character M(GSM 23));

if <dcs> indicates that 8-bit or UCS2 data coding scheme is used or <fo> indicates that GSM 03.40 TP-User-Data-Header-Indication is set: the entered text should consist of two IRA character long hexadecimal numbers which ME/TA converts into 8-bit octet (e.g. two characters 2A (IRA 50 and 65) will be converted to an octet with integer value 42).

- Sending can be cancelled by giving <ESC> character (IRA 27).
- <ctrl-Z> (IRA 26) must be used to indicate the ending of the message body.

<da>	*Description*
String type	GSM 03.40 TP-Destination-Address Value in string format; BCD numbers (or GSM default alphabet characters) are converted to characters of the currently selected TE character (refer command +CSCS). Type of address given by <toda>

<toda>	*Description*
String type	GSM 04.11 TP-Destination- Address Type-of-Address octet in integer format (when first character of <da> is +(IRA 43) default is 145, otherwise default is 129

<mr>	*Description*
String type	GSM 03.40 TP-Service-Centre-Time-Stamp in time-string format (refer <dt>)

<mr>	*Description*
Integer	GSM 03.40 TP-Message-Reference

Example

```
AT+CMGF=1
OK
AT+CSDH=1
OK
AT+CSMP=17,167,0,0
OK
```

AT+CMGS="+447747008670"
> Test SMS 0
+CMGS: 15

OK

13.8 AT+CMSS Send From Storage

PDU mode

Description	Command	Possible Responses
Send from storage	AT+CMSS=<index>	• +CMSS: <mr> • *+CMS ERROR: <err>* • OK • ERROR
Show if the command is supported	AT+CMSS=?	• OK • ERROR

Sends message with location value <index> from message storage <mem2> to the network (SMS-SUBMIT or SMS-COMMAND). Reference value <mr> is returned to the TE on successful message delivery. If sending fails in a network or an ME error, final result code +CMS ERROR: <err> is returned. This command is abortable. See "AT+CPMS Preferred Message Storage", page 179.

<index>	*Description*
Integer type	Value in the range of location numbers supported by the associated memory

<mr>	*Description*
Integer type	GSM 03.40 TP-Message-Reference in integer format

Text Mode

Description	Command	Possible Responses
Send from storage	AT+CMSS=<index> [,<da> [,<toda>]]	• +CMSS: <mr> [,<scts>] • +CMS ERROR: <err> • OK • ERROR
Show if the command is supported	AT+CMSS=?	• OK • ERROR

Sends message with location value <index> from message storage <mem2> to the network (SMS-SUBMIT or SMS-COMMAND). Reference value <mr> is returned to the TE on successful message delivery. Optionally, when +CSMS <service> value is 1 and network

supports, <scts> is returned. If sending fails in a network or an ME error, final result code +CMS ERROR: <err> is returned. This command is abortable.

<index>	*Description*
Integer type	Value in the range of location numbers supported by the associated memory

<da>	*Description*
String type	GSM 03.40 TP-Destination-Address Value in string format; BCD numbers (or GSM default alphabet characters) are converted to characters of the currently selected TE character (refer command +CSCS). Type of address given by <toda>

<toda>	*Description*
String type	GSM 04.11 TP-Destination- Address Type-of-Address octet in integer format (when first character of <da> is +(IRA 43) default is 145, otherwise default is 129

<scts>	*Description*
String type	GSM 03.40 TP-Service-Centre-Time-Stamp in time-string format (refer <dt>)

<mr>	*Description*
Integer type	GSM 03.40 TP-Message-Reference in integer format

13.9 AT+CMGC Send Command

PDU Mode

Description	*Command*	*Possible Responses*
Send command message	AT+CMGC=<length><CR> <pdu><ctrl-Z/ESC>	• if PDU mode (+CMGF=0) and sending successful: +CMGC: <mr>[,<ackpdu>] • if sending fails: +CMS ERROR: <err> • OK • ERROR
Show if the command is supported	AT+CMGC=?	• OK • ERROR

Sends a command message from a TE to the network (SMS-COMMAND). The entering of PDU is as specified in the send message command, +CMGS. Message reference value <mr> is returned to the

TE on successful message delivery. Optionally (when +CSMS <service> value is 1 and network supports) <ackpdu> is returned. Values can be used to identify message upon unsolicited delivery status report result code. If sending fails in a network or an ME error, final result code +CMS ERROR: <err> is returned. This command is abortable.

<length>	*Description*
Integer type	Value indicating in PDU mode (+CMGF=0), the length of the actual TP data unit in octets (i.e. the RP layer SMSC address octets are not counted in the length)

<pdu>	*Description*
String	In the case of SMS: GSM 04.11 SC address followed by GSM 03.40 TPDU in hexadecimal format: ME/TA converts each octet of TP data unit into two IRA character long hexadecimal number (e.g. octet with integer value 42 is presented to TE as two characters 2A (IRA 50 and 65)) In the case of CBS: GSM 03.41 TPDU in hexadecimal format

<mr>	*Description*
Integer type	GSM 03.40 TP-Message-Reference in integer format

<ackpdu>	*Description*
String	GSM 03.40 RP-User-Data element of RP-ACK PDU; format is same as for <pdu> in case of SMS, but without GSM 04.11 SC address field and parameter shall be bounded by double quote characters like a normal string type parameter

Text Mode

Description	*Command*	*Possible Responses*
Send command message	AT+CMGC=<fo>,<ct>[,<pid>[,<mn>[,<da>[,<toda>]]]] <CR> ***Text is entered***<ctrl-Z/ESC>	• if PDU mode (+CMGF=1) and sending successful: +CMGC: <mr>[,<scts>] • if sending fails: +CMS ERROR: <err> • OK • ERROR
Show if the commands is supported	AT+CMGC=?	• OK • ERROR

Sends a command message from a TE to the network (SMS-COMMAND). The entering of text is as specified in the send message command, +CMGS, but the format is fixed to be a sequence of two IRA character long hexadecimal numbers, which the ME/TA converts into

8-bit octets (refer to +CMGS). Message reference value <mr> is returned to the TE on successful message delivery. Optionally, when +CSMS <service> value is 1 and there is network support, <scts> is returned. Values can be used to identify message upon unsolicited delivery status report result code. If sending fails in a network or an ME error, final result code +CMS ERROR: <err> is returned. This command is abortable.

<fo>	*Description*
0	First octet of SMS-DELIVER in integer format
1	First octet of SMS_SUBMIT in integer format
2	First octet of SMS-STATUS-REPORT in integer format
3	First octet of SMS-COMMAND in integer format

<ct>	*Description*
Integer	GSM 03.40 TP-Command-Type. **Default value is 0**

<pid>	*Description*
0-255	Protocol Identifier in integer format. **Default value is 0**, according to 07.05 section 9.2.3.9

<mn>	*Description*
Integer	GSM 03.40 TP-Message-Number

<da>	*Description*
String type	GSM 03.40 TP-Destination-Address Value in string format; BCD numbers (or GSM default alphabet characters) are converted to characters of the currently selected TE character (refer command `+CSCS`). Type of address given by `<toda>`

<toda>	*Description*
String type	GSM 04.11 TP-Destination- Address Type-of-Address octet in integer format (when first character of <da> is +(IRA 43) default is 145, otherwise default is 129

<mr>	*Description*
Integer type	GSM 03.40 TP-Message-Reference in integer format

<scts>	*Description*
String type	GSM 03.40 TP-Service-Centre-Time-Stamp in time-string format (refer to <dt>)

13.10 AT+CNMI New Message Indications to TE

PDU Mode

Description	*Command*	*Possible Responses*
Set new message indication to TE	AT+CNMI=[<mode>[,<mt>[,<bm>[,<ds>]]]]	• +CMS ERROR: <err> • OK • ERROR
Shows the current setting	AT+CNMI?	• +CNMI: <mode>,<mt>,<bm>,<ds> • OK • ERROR
Show if the command is supported	AT+CNMI=?	• +CNMI: (list of supported <mode>s), (list of supported <mt>s), (list of supported <bm>s), (list of supported <ds>s) • OK • ERROR

Selects the procedure for the way in which new messages received from the network, are indicated to the TE when it is active, e.g. DTR signal is ON. If the TE is inactive (DTR signal is OFF), message receiving is carried out as specified in GSM 03.38 (3G TS 23.038).

If the command fails and the error is related to mobile equipment or network, the final result code CMS ERROR: <err> is returned.

<mode>	*Description*
3	Forward unsolicited result codes directly to the TE. TA-TE link specific inband technique used to embed result codes and data when TA is in on-line data mode

<mt>	Description
0	No SMS-DELIVER indications are routed to the TE. No class, Class 0, class 1 and class 3 use <mem3> as preferred storage. Class 2 messages shall be stored in the SIM. If it this is not possible then the MS shall send an error message accordingly to GSM 03.38
1	SMS-DELIVER is stored into ME/TA and the indication of the memory location is routed to the TE using unsolicited result code: +CMTI: <mem>,<index>
2	Class 0, class 1, and class 3 SMS-DELIVERs are routed directly to the TE using the unsolicited result code but not stored in ME/TA: +CMT:[<alpha >], <length><CR><LF><pdu> (PDU mode enabled) Class 2 data coding scheme result in indication as defined in <mt>=1
3	Class 3 SMS-DELIVERs are routed directly to TE using unsolicited result codes +CMT: <length><CR><LF><pdu>. Class 3 SMS-DELIVER is not stored in ME/TA. Messages of other data coding schemes result in indication as defined in <mt>=1

<bm>	Description
0	Store message to "BM" (or some manufacturer specific memory). No CBM indications are routed to the TE
2	New CBMs are routed directly to the TE using unsolicited result code: +CBM: <length><CR><LF><pdu> (PDU mode enabled). New CBMs are not stored in CBM memory

<ds>	Description
0	No SMS-STATUS-REPORTs are routed to the TE. SMS-STATUS-REPORT is stored in ME/TA
1	SMS-STATUS-REPORTs are routed to the TE using unsolicited result code: +CDS: < length>< CR>< LF>< pdu> (PDU mode enabled). SMS-STATUS-REPORT is not stored in ME/TA
2	SMS-STATUS-REPORTs are routed to the TE using unsolicited result code: +CDSI: < mem><index> (PDU mode enabled). SMS-STATUS-REPORT is stored in ME/TA

Unsolicited Result codes:

+CMT: <length><CR><LF><pdu>
+CMTI: <mem>,<index>
+CBM: <length><CR><LF><pdu>
+CDS: <length><CR><LF><pdu>
+CDSI: <mem><index>

Text Mode

Description	*Command*	*Possible Responses*
Set new message indication to TE	AT+CNMI=[<mode>[,<mt>[,<bm>[,<ds>]]]]	• +CMS ERROR: <err> • OK • ERROR
Shows the current setting	AT+CNMI?	• +CNMI: <mode>,<mt>,<bm>,<ds> • OK • ERROR
Show if the command is supported	AT+CNMI=?	• +CNMI: (list of supported <mode>s), (list of supported <mt>s), (list of supported <bm>s), (list of supported <ds>s) • OK • ERROR

Selects the procedure for the way in which new messages received from the network, are indicated to the TE when it is active, e.g. DTR signal is ON. If TE is inactive (DTR signal is OFF), message receiving is carried out as specified in GSM 03.38 (3G TS 23.038).

If the command fails and the error is related to mobile equipment or network, the final result code CMS ERROR: <err> is returned.

<mode>	*Description*
3	Forward unsolicited result codes directly to the TE. TA-TE link specific inband technique used to embed result codes and data when TA is in on-line data mode

<mt>	*Description*
0	No SMS-DELIVER indications are routed to the TE. No class, Class 0, class 1 and class 3 use <mem3> as preferred storage. Class 2 messages shall be stored in the SIM. If it this is not possible then the MS shall send an error message accordingly to GSM 03.38
1	SMS-DELIVER is stored into ME/TA and the indication of the memory location is routed to the TE using unsolicited result code: +CMTI: <mem>,<index>
2	Class 0, class 1, and class 3 SMS-DELIVERs are routed directly to the TE using the unsolicited result code: +CMT:<oa>, [<alpha>, <scts> [,<tooa>,<fo>,<pid>,<dcs>, <sca>,<tosca>,<length>]<CR><LF><data> (text mode enabled). About parameters in italics, refer to the show text mode command, +CSDH
3	Class 3 SMS-DELIVERs are routed directly to TE using unsolicited result codes +CMT:<oa>, [<alpha>, <scts> [,<tooa>,<fo>,<pid>,<dcs>,<sca>,<tosca>,<length>]<CR> <LF><data> (Text Mode enabled). About parameters in italics, refer to the show text mode command, +CSDH. Messages of other data coding schemes result in indication as defined in <mt>=1

<bm>	*Description*
0	Store message to “BM” (or some manufacturer specific memory). No CBM indications are routed to the TE
2	New CBMs are routed directly to the TE using unsolicited result code: +CBM: <sn>,<mid>,<dcs>,<page>,<pages><CR><LF><data> (Text mode enabled)

<ds>	*Description*
0	No SMS-STATUS-REPORTs are routed to the TE
1	SMS-STATUS-REPORTs are routed to the TE using unsolicited result code: : +CDS: <fo>,<mr>,[<ra>],[<tora>],<scts>,<dt>,<st> (Text mode enabled). SMS-STATUS-REPORT is not stored in ME/TA
2	SMS-STATUS-REPORTs are routed to the TE using unsolicited result code: +CDSI: < mem><index> (Text mode enabled). SMS-STATUS-REPORT is stored in ME/TA

Unsolicited Result codes:

+CMT:<oa>, [<alpha>, <scts>
[,<tooa>,<fo>,<pid>,<dcs>,<sca>,<tosca>,<length>]<CR><LF>
<data> (Text Mode enabled). Refer to the show text mode command, +CSDH for information on the parameters in italics.
+CMTI: <mem>,<index>
+CBM: <sn>,<mid>,<dcs>,<page>,<pages><CR><LF><data>
+CDS: <fo>,<mr>,[<ra>],[<tora>],<scts>,<dt>,<st>
+CDSI: <mem><index>

Example

Display cell broadcast messages:

AT+CNMI=3,0,2,0,0

13.11 AT+CMGR Read Message

PDU Mode

Description	*Command*	*Possible Responses*
Read message	AT+CMGR= <index>	• *+CMGR: <stat>,[<alpha>],<length>]* <CR><LF><pdu> • +CMS ERROR: <err> • OK • ERROR
Show if the command is supported	AT+CMGR=?	• OK • ERROR

Returns message with location value <index> from preferred message storage <mem1> to the TE. Status of the message and entire message data unit <pdu> is returned. If status of the message is 'received unread', status in the storage changes to 'received read'. If reading fails, final result code +CMS ERROR: <err> is returned.

<stat>	*Description*
0	Received unread message (i.e. new message)
1	Received read message
2	Stored unsent message (only applicable to SMs)
3	Stored sent message (only applicable to SMs)

<index>	*Description*
Integer type	Value in the range of location numbers supported by the associated memory

<alpha>	*Description*
String type	Manufacturing specific. Should be left empty but not omitted

<length>	*Description*
Integer type	Value indicating in PDU mode (+CMGF=0), the length of the actual TP data unit in octets (i.e. the RP layer SMSC address octets are not counted in the length)

<pdu>	*Description*
	In the case of SMS: GSM 04.11 SC address followed by GSM 03.40 TPDU in hexadecimal format: ME/TA converts each octet of TP data unit into two IRA character long hexadecimal number (e.g. octet with integer value 42 is presented to TE as two characters 2A (IRA 50 and 65)) In the case of CBS: GSM 03.41 TPDU in hexadecimal format

Text Mode

Description	*Command*	*Possible Responses*
Read message	AT+CMGR= [<index>]	• **if text mode (+CMGF=1), command successful and SMS-DELIVER:** +CMGR: <stat>,<oa>,[<alpha>],<scts>,[<tooa>, <fo>,<pid>,<dcs>,<sca>,<tosca>, <length>]<CR><LF><data> • **if text mode (+CMGF=1), command successful and SMS-SUBMIT:** +CMGR: <stat>,<da>,[<alpha>],*[<toda>,<fo>, <pid>,<dcs>,[<vp>],<sca>,<tosca>, <length>]*<CR><LF><data> • **if text mode (+CMGF=1), command successful and SMS-STATUS-REPORT:** +CMGR: <stat>,<fo>,<mr>,[<ra>],[<tora>], <scts>,<dt>,<st> • **if text mode (+CMGF=1), command successful and SMS-COMMAND:** +CMGR: <stat>,<fo>,<ct>*[,<pid>,[<mn>],[<da>], [<toda>],<length><CR><LF><cdata>]* • **if text mode (+CMGF=1), command successful and CBM storage:** +CMGR: <stat>,<sn>,<mid>,<dcs>,<page>, <pages><CR><LF><data> • +CMS ERROR: <err> • OK • ERROR
Show if the command is supported	AT+CMGR=?	• OK • ERROR

Returns messages with location index <index> from message storage <mem1> to the TE. About text mode parameters in Italics, refer command Show Text Mode Parameters (+CSDH), If the status of the message is ‘received unread’, status in the storage changes to ‘received read’. If listing fails final result code +CMS ERROR: <err> is returned.

<index>	*Description*
Integer type	Value in the range of location numbers supported by <mem1>

<stat>	*Description*
0	Received unread message (new message)
1	Received read message
2	Stored unsent message (only applicable to SMs)
3	Stored sent message (only applicable to SMs)

<oa>	*Description*
String type	GSM 03.40 TP-Originating-Address Value in string format; BCD numbers (or GSM default alphabet characters) are converted to characters of the currently selected TE character (refer command +CSCS). Type of address given by <tooa>

<da>	*Description*
String type	GSM 03.40 TP-Destination-Address Value in string format; BCD numbers (or GSM default alphabet characters) are converted to characters of the currently selected TE character (refer command +CSCS). Type of address given by <toda>

<toda>	*Description*
String type	GSM 04.11 TP-Destination- Address Type-of-Address octet in integer format (when first character of <da> is +(IRA 43) default is 145, otherwise default is 129

<tooa>	*Description*
String type	GSM 04.11 TP-Originating-Address Type-of-Address octet in integer format (default refer <toda>)

<tora>	*Description*
String type	GSM 04.11 TP-Recipient-Address Type-of-Address octet in integer format (default refer <toda>)

<alpha>	*Description*
String type	Manufacturing specific. Should be left empty but not omitted, i.e. commas shall mark the place were it should be. Used character set should be the one selected with command Select TE Character Set +CSCS

<scts>	*Description*
String type	GSM 03.40 TP-Service-Centre-Time-Stamp in time-string format (refer <dt>)

<length>	*Description*
Integer type	Value indicating in PDU mode (+CMGF=0), the length of the actual TP data unit in octets (i.e. the RP layer SMSC address octets are not counted in the length)

<data>
The entered text should be formatted as follows: if <dcs> (set with +CSMP) indicates that GSM 03.38 default alphabet is used and <fo> indicates that GSM 03.40 TP-User-Data-Header-Indication is not set: if TE character set other than "HEX" (refer command Select TE Character Set +CSCS in TS 07.07): ME/TA converts the entered text into GSM alphabet according to rules of Annex A; backspace can be used to delete last character and carriage returns can be used (previously mentioned four character sequence shall be sent to the TE after every carriage return entered by the user); if TE character set is "HEX": the entered text should consist of two IRA character long hexadecimal numbers which ME/TA converts to 7-bit characters of GSM alphabet (e.g. 17 (IRA 49 and 55) will be converted to character M (GSM 23)); if <dcs> indicates that 8-bit or UCS2 data coding scheme is used or <fo> indicates that GSM 03.40 TP-User-Data-Header-Indication is set: the entered text should consist of two IRA character long hexadecimal numbers which ME/TA converts into 8-bit octet (e.g. two characters 2A (IRA 50 and 65) will be converted to an octet with integer value 42); sending can be cancelled by giving <ESC> character (IRA 27) <ctrl-Z> (IRA 26) must be used to indicate the ending of the message body

<fo>	*Description*
0	First octet of SMS-DELIVER in integer format
1	First octet of SMS_SUBMIT in integer format
2	First octet of SMS-STATUS-REPORT in integer format
3	First octet of SMS-COMMAND in integer format

<mr>	*Description*
Integer	GSM 03.40 TP-Message_Reference

<ra>	*Description*
String type	GSM 03.40 TP-Recipient-Address-Value field. BCD (or GSM default alphabet) are converted to characters of the currently selected TE character set (refef command +CSCS. Type of address given by <tosca>

<dt>	*Description*
String type	GSM 03.40 TP-Discharge-Time in string format "yy/mm/dd,hh:mm:ss±zz where characters indicate year, month, day, hour,minutes, seconds and time zone

<st>	*Description*
Integer	GSM 03.40 TP-status

<ct>	*Description*
Integer	GSM 03.40 TP--command-type. **Default value is 0**

<sn>	*Description*
Integer	GSM 03.41 CBM serial number

<mid>	*Description*
String type	All different possible combinations of CBM message identifiers (refer <mid>) (default is empty string); e.g. "0,1,5-7" <mid> GSM 03.41 CBM message identifier in integer format

<page>	*Description*
Integer format	GSM 03.41 CBM page parameter bits 4-7 in integer format

<pages>	*Description*
Integer type	GSM 03.41 CBM page parameter bits 0-3 in integer format

<pid>	*Description*
0 - 255	Protocol Identifier in integer format. **Default value is 0**, according to 07.05 section 9.2.3.9

<dcs>	*Description*
0 - 255	Data coding scheme. See GSM 03.48. **UCS2 and compressed text not supported**

<sca>	*Description*
String type	GSM 04.11 RP SC address Address-Value field in string format; BCD numbers (or GSM default alphabet characters) are converted to characters of the currently selected TE character set

<tosca>	*Description*
Integer type	GSM 04.11 RP SC address type-of-address octet in integer format
129	ISDN/telephony numbering plan, national/international unknown
145	ISDN/telephony numbering plan, international number
161	ISDN/telephony numbering plan, national number
128 - 255	Other values refer to GSM 04.08 section 10.5.4.7

<vp>	Description
0 - 143	(TP-VP+1) x 5 minutes (i.e. 5 minute intervals up to 12 hous)
144 - 167	12 hours + ((TP_VP-143) x 30 minutes)
168 - 196	(TP-VP-166) x 1 day
197 - 255	(TP-VP-192) x 1 week

<mn>	Description
Integer type	GSM 03.40 TP-message-number

13.12 AT+CMGL List Message

PDU Mode

Description	Command	Possible Responses
List message	AT+CMGL [=<stat>]	• +CMGL: <index>,<stat>,[<alpha>],<length> <CR><LF><pdu>[<CR><LF> +CMGL: <index>,<stat>,[<alpha>],<length> <CR><LF><pdu>[…]] • +CMS ERROR: <err>
Show if the command is supported	AT+CMGL=?	• +CMGL: (list of supported <stat>s)

Note! Returns messages with status value <stat> from preferred message storage <mem1> to the TE. Entire data units <pdu> are returned. If status of the message is ‘received unread’, status in the storage changes to ‘received read’. If listing fails, final result code +CMS ERROR: <err> is returned.

<stat>	Description
0	Received unread message (i.e. new message)
1	Received read message
2	Stored unsent message (only applicable to SMs)
3	Stored sent message (only applicable to SMs)
4	All messages (only applicable to +CMGL command)

<index>	Description
Integer type	Value in the range of location numbers supported by the associated memory

<alpha>	*Description*
String type	Manufacturing specific. Should be left empty but not omitted

<length>	*Description*
Integer type	Value indicating in PDU mode (+CMGF=0), the length of the actual TP data unit in octets (i.e. the RP layer SMSC address octets are not counted in the length)

<pdu>	*Description*
	In the case of SMS: GSM 04.11 SC address followed by GSM 03.40 TPDU in hexadecimal format: ME/TA converts each octet of TP data unit into two IRA character long hexadecimal number (e.g. octet with integer value 42 is presented to TE as two characters 2A (IRA 50 and 65)) In the case of CBS: GSM 03.41 TPDU in hexadecimal format

Text Mode

Description	*Command*	*Possible Responses*
List message	AT+CMGL =[<stat>]	• **If text mode (+CMGF=1), command successful and SMS-SUBMITs and SMS-DELIVERs:** +CMGL: <index1>,<stat>,<oa/da>,[<alpha>], [<scts>][,<tooa/toda>,<length>] <CR><LF><data>[<CR><LF> +CMGL: <index2>,<stat>,<oa/da>,[<alpha>], [<scts>][,<tooa/toda>,<length>] <CR><LF><data>[…]] • **If text mode (+CMGF=1), command successful and SMS-STATUS-REPORT:** +CMGL: <index1>,<stat>,<fo>,<mr>, [<ra>], [<tora>],<scts>,<dt>,<st> [<CR><LF> +CMGL: <index2>,<stat>,<fo>,<mr>,[<ra>], [<tora>],<scts>,<dt>,<st>[…]] • **If text mode (+CMGF=1), command successful and SMS-COMMANDs:** +CMGL: <index>,<stat>,<fo>,<ct> [<CR><LF> +CMGL: <index>,<stat>,<fo>,<ct>[…]] • **If text mode (+CMGF=1), command successful and CBM storage:** +CMGL: <index>,<stat>,<sn>,<mid>,<page>, <pages>,<CR><LF><data>[<CR><LF> +CMGL: <index>,<stat>,<sn>,<mid>,<page>, <pages><CR><LF> <data>[…]] • **Otherwise:** +CMS ERROR: <err>
Read the current setting		• +CMGL:<stat> • +CMS ERROR: <err>
Test if the command is supported	AT+CMGL=?	• +CMGL: (list of supported <stat>s) • +CMS ERROR: <err>

Returns messages with status value <stat> from message storage <mem1> to the TE. About text mode parameters in Italics, refer command Show Text Mode Parameters (+CSDH). If the status, of the message is ‘received unread’, status in the storage changes to ‘received read’. If listing fails final result code +CMS ERROR: <err> is returned.

<index>	*Description*
Integer type	Value in the range of location numbers supported by <mem1>

<stat>	*Description*
Integer	Indicates the status of messages in memory
0	Received unread message (new message)
1	Received read message
2	Stored unsent message (only applicable to SMs)
3	Stored sent message (only applicable to SMs)
4	All messages (only applicable to +CMGL command)

<oa>	*Description*
String type	GSM 03.40 TP-Originating-Address Value in string format; BCD numbers (or GSM default alphabet characters) are converted to characters of the currently selected TE character (refer command +CSCS). Type of address given by <tooa>

<da>	*Description*
String type	GSM 03.40 TP-Destination-Address Value in string format; BCD numbers (or GSM default alphabet characters) are converted to characters of the currently selected TE character (refer command +CSCS). Type of address given by <toda>

<toda>	*Description*
String type	GSM 04.11 TP-Destination- Address Type-of-Address octet in integer format (when first character of <da> is +(IRA 43) default is 145, otherwise default is 129

<tooa>	*Description*
String type	GSM 04.11 TP-Originating-Address Type-of-Address octet in integer format (default refer <toda>)

<tora>	*Description*
String type	GSM 04.11 TP-Recipient-Address Type-of-Address octet in integer format (default refer <toda>)

<alpha>	*Description*
String type	Manufacturing specific. Should be left empty but not omitted i.e. commas shall mark the place were it should be. Used character set should be the one selected with command Select TE Character Set +CSCS

<scts>	*Description*
String type	GSM 03.40 TP-service-centre-time-stamp in time-string format (refer <dt>)

<length>	*Description*
Integer type	Value indicating in PDU mode (+CMGF=0), the length of the actual TP data unit in octets (i.e. the RP layer SMSC address octets are not counted in the length)

<data>

The entered text should be formatted as follows:

if <dcs> (set with +CSMP) indicates that GSM 03.38 default alphabet is used and <fo> indicates that GSM 03.40 TP-User-Data-Header-Indication is not set:

if TE character set other than "HEX" (refer command Select TE Character Set +CSCS in TS 07.07): ME/TA converts the entered text into GSM alphabet according to rules of Annex A; backspace can be used to delete last character and carriage returns can be used (previously mentioned four character sequence shall be sent to the TE after every carriage return entered by the user);

if TE character set is "HEX": the entered text should consist of two IRA character long hexadecimal numbers which ME/TA converts to 7-bit characters of GSM alphabet (e.g. 17 (IRA 49 and 55) will be converted to character M (GSM 23));

if <dcs> indicates that 8-bit or UCS2 data coding scheme is used or <fo> indicates that GSM 03.40 TP-User-Data-Header-Indication is set: the entered text should consist of two IRA character long hexadecimal numbers which ME/TA converts into 8-bit octet (e.g. two characters 2A (IRA 50 and 65) will be converted to an octet with integer value 42);

sending can be cancelled by giving <ESC> character (IRA 27)
<ctrl-Z> (IRA 26) must be used to indicate the ending of the message body

<fo>	*Description*
0	First octet of SMS-DELIVER in integer format
1	First octet of SMS_SUBMIT in integer format
2	First octet of SMS-STATUS-REPORT in integer format
3	First octet of SMS-COMMAND in integer format

<mr>	*Description*
Integer	GSM 03.40 TP-Message-Reference

<ra>	*Description*
String	GSM 03.40 TP-Recipient-Address-Value field. BCD (or GSM default alphabet) are converted to characters of the currently selected TE character set (refef command +CSCS. Type of address given by <tosca>

<dt>	*Description*
String	GSM 03.40 TP-Discharge-Time in string format "yy/MM/dd,hh:mm:ss+-zz where characters indicate year, month, day, hour,minutes, seconds and time zone

<st>	*Description*
Integer	GSM 03.40 TP-Status

<ct>	*Description*
Integer	GSM 03.40 TP-Command-Type (default 0)

<sn>	*Description*
Integer	GSM 03.41 CBM Serial Number

<mid>	*Description*
String type	All different possible combinations of CBM message identifiers (refer <mid>) (default is empty string); e.g. "0,1,5-7" <mid> GSM 03.41 CBM Message Identifier in integer format

<page>	*Description*
Integer format	GSM 03.41 CBM Page Parameter bits 4-7 in integer format

<pages>	*Description*
Integer format	GSM 03.41 CBM Page Parameter bits 0-3 in integer format

Example

AT+CMGF=1
OK

AT+CMGL=?
+CMGL: "REC UNREAD","REC READ","STO UNSENT","STO SENT","ALL"

OK

13.13 AT+CMGD Delete Message

Common for both PDU and Text modes

Description	*Command*	*Possible Responses*
Delete message	AT+CMGD=<index>	• +CMS ERROR: <err> • OK • ERROR
Show if the command is supported	AT+CMGD=?	• OK • ERROR

Deletes message from preferred message storage <mem1> location <index>. If deleting fails, final result code +CMS ERROR: <err> is returned. Test command shows the valid memory locations.

<index>	*Description*
Integer type	Value in the range of location numbers supported by the associated memory

13.14 AT+CSDH Show Text Mode Parameters

Only Applicable to Text Mode

Description	*Command*	*Possible Responses*
Set the show text mode	AT+CSDH=[<show>]	• +CME ERROR: <err> • OK
Display current settings	AT+CSDH?	• +CSDH: <show> • +CME ERROR: <err>
Show if the command is supported	AT+CSDH=?	• +CSDH: (list of supported <show>s) • OK • +CME ERROR: <err>

Controls whether detailed header information is shown in text mode result codes.

<show>	*Description*
0	Do not show header values defined in commands AT+CSCA and AT+CSMP (<sca>, <tosca>, <fo>, <vp>, <pid> and <dcs>) nor <length>, <toda> or <tooa> in +CMT, +CMGL, +CMGR result codes for SMS-DELIVERs and SMS-SUBMITs in text mode; for SMS-COMMANDs in +CMGR result code, do not show <pid>, <mn>, <da>, <toda>, <length> or <cdata>
1	Show the values in result codes

13.15 AT+CSMP Set Text Mode Parameters

Only Applicable to Text Mode

Description	*Command*	*Possible Responses*
Set the text mode parameters	AT+CSMP=[<fo> [,<vp>[,<pid> [,<dcs>]]]]	• +CME ERROR: <err> • OK • ERROR
Display current settings	AT+CSMP?	• +CSMP: <fo>,<vp>,<pid>,<dcs> • +CME ERROR: <err>
Show if the command is supported	AT+CSMP=?	• +CSMP: (List of supported <fo>s), (list of supported <vp>s), (list of supported <pid>s), (list of supported <dcs>s) • +CME ERROR: <err> • OK • ERROR

Used to select values for additional parameters needed when SM is sent to the network or placed in a storage when text format message mode is selected. It is possible to set the validity period starting from when the SM is received by the SMSC (<vp> is in range 0… 255). The <pid> parameter identifies the higher protocol being used or indicates interworking with a certain type of telematic service and <dcs> determines the way the information is encoded as in GSM 03.38.

<fo>	*Description*
0-255	Depending on the command or result code: first octet of GSM 03.40 SMS-DELIVER, SMS-SUBMIT (default value 17),SMS-STATUS-REPORT, or SMS-COMMAND (default value 2) in integer format

<vp>	*Description*
0-143	(TP-VP+1) x 5 minutes (i.e 5 minutes intervals up to 12 hous)
144-167	12 hours + ((TP_VP-143) x 30 minutes)
168-196	(TP-VP-166) x 1 day
197-255	(TP-VP-192) x 1 week

<pid>	*Description*
0-255	Protocol Identifier in integer format. **Default value is 0**, according to 07.05 section 9.2.3.9

<dcs>	*Description*
0-255	Data coding scheme. See GSM 03.38. **UCS2 and compressed text not supported**

13.16 AT+CSCS Select Character Set

Description	*Command*	*Possible Responses*
Set command informs TA which character set is used by the TE	AT+CSCS=<chset>	• OK • ERROR
Show the current setting	AT+CSCS?	• +CSCS: <chset> • OK • ERROR
Show list of supported character sets	AT+CSCS=?	• +CSCS: (list of supported <chset>s) • OK • ERROR

This command informs the TA which character set <chset> is used by the TE. The TA is then able to convert character strings correctly between TE and ME character sets.

When TA-TE interface is set to 8-bit operation and the used TE alphabet is 7-bit, the highest bit shall be set to zero.

Note! How the internal alphabet of ME is converted to, or from, the TE alphabet is manufacturer specific.

Read command shows current setting and test command display conversion schemes implemented in the TA.

<chset>	*Description*
"GSM"	GSM default alphabet (GSM 03.38 subclause 6.2.1). **Default value**
"IRA"	International reference alphabet (ITU-T T.50). Note: recommended default value by GSM 07.07.
"8859-n"	ISO 8859 Latin *n* (1-6) character set
"UTF8"	Universal text format, 8 bits
"ERICSSON"	Unicode, 16-bit universal multiple-octet coded character set (ISO/IEC10646)

13.17 AT+CSMS Select Message Service

Common for both PDU and Text Modes

Description	*Command*	*Possible Responses*
Select message service	AT+CSMS=<service>	• +CSMS: <mt>,<mo>,<bm> • +CMS ERROR: <err> • OK • ERROR
Show supported message types along with the current service setting	AT+CSMS?	• +CSMS: <service>,<mt>,<mo>, <bm> • OK • ERROR
Show list of supported services	AT+CSMS=?	• +CSMS: (list of supported <service>s) • OK • ERROR

Selects messaging service <service>. It returns the types of messages supported by the ME: <mt> for mobile terminated messages, <mo> for mobile originated messages and <bm> for broadcast type messages. If the chosen service is not supported by the ME (but is supported by the TA), final result code +CMS ERROR: <err> is returned.

<service>	*Description*
0	GSM 03.40 and 03.41. The syntax of SMS AT commands is compatible with GSM 07.05 Phase 2 version 4.7.0; Phase 2+ features which do not require new command syntax may be supported (e.g. correct routing of messages with new Phase 2+ data coding schemes)
2..127	Reserved

<mt>	*Description*
0	Mobile terminated messages not supported
1	Mobile terminated messages supported

<mo>	*Description*
0	Mobile originated messages not supported
1	Mobile originated messages supported

<bm>	*Description*
0	Broadcast messages not supported
1	Broadcast messages supported

<err>	*Description*
0...127	GSM 04.11 Annex E-2 values
128...255	GSM 03.40 subclause 9.2.3.22 values
300	ME failure
302	Operation not allowed
304	Invalid PDU mode parameter
310	SIM not inserted
311	SIM PIN required
312	PH-SIM PIN required
313	SIM failure
314	SIM busy
315	SIM wrong
316	SIM PUK required
317	SIM PIN2 required
318	SIM PUK2 required
500	Unknown error
...511	Other values in range 256...511 are reserved
512...	Manufacturer specific

14. Short Message Services - Cell Broadcast

14.1 AT+CNMI New Message Indications to TE

See 13.10, AT+CNMI New Message Indications to TE

14.2 AT+CSCB Select Cell Broadcast Message Type

Common for both PDU and text modes

Description	*Command*	*Possible Responses*
Select cell broadcast message type	AT+CSCB=[<mode> [,<mids>]]	• +CMS ERROR: <err> • OK • ERROR
Shows the current setting	AT+CSCB?	• +CSCB: <mode>,<mids> • OK • ERROR
Show if the command is supported	AT+CSCB=?	• +CSCB: (list of supported <mode>s) • OK • ERROR

Selects which types of CBMs are to be received by the ME.

<mode>	*Description*
0	Message types in <mids> and <dcss> are accepted

<mids>	*Description*
string type	All different possible combinations of CBM message identifiers (refer <mid>) (default is empty string); e.g. “0,1,5-7” <mid> GSM 03.41 CBM Message Identifier in integer format

15. SIM Application Toolkit

15.1 AT+CPIN PIN Control

See 3.23, AT+CPIN PIN Control

15.2 AT*E2STKS SIM Application Toolkit Settings

Description	*Command*	*Possible responses*
Set the presentation of the unsolicited result codes corresponding to STK	AT*E2STKS=<on_off>	• +CME ERROR <err> • OK • ERROR
Read the current status of the presentation of the unsolicited result codes	AT*E2STKS?	• *E2STKS: <on_off> • +CME ERROR <err> • OK • ERROR
Test if the command is supported	AT*E2STKS=?	• *E2STKD: list of supported <on_off> • +CME ERROR <err> • OK • ERROR

Allows the external application to disable or enable the presentation of the unsolicited result codes corresponding to the STK commands. Parameter <on_off> is used to disable or enable the presentation of an unsolicited result code *E2STK. Setting chosen is stored internally so that it is not necessary to change it each time the ME is switched on.

If the presentation of the unsolicited result codes is disabled, the messages below are not sent to the application.

The unsolicited result codes shall be disabled by default.

<on_off>	*Description*
0	Disable the presentation of the unsolicited result codes related to STK. **Default value**
1	Enable the presentation of the unsolicited result codes related to STK

Unsolicited Result Codes:

The unsolicited result codes defined in sections below can be received.

15.3 AT*E2STKD M2M STK Display Text

Description	*Command*	*Possible responses*
Answer to the reception of DISPLAY TEXT	AT*E2STKD=<answer>	• +CME ERROR <err> • OK • ERROR
Test if the command is supported	AT*E2STKD=?	• *E2STKD: (list of supported <answer>) • +CME ERROR <err> • OK • ERROR

The ME passes the parameters within DISPLAY TEXT command to the external application by means of the unsolicited result code *E2STKD.

Command AT*E2STKD allows the external application to send the appropriate answer after receiving the unsolicited result code, and before the timeout expires.

If Answer command is sent once the timeout expires, an ERROR response is generated.

Test command returns the list of supported <answer>. Values follow GSM 11.14 standard

<answer>	*Description*
0	OK. Performed as required: the text was displayed and cleared as requested. It corresponds to '00' Command performed successfully, described in the GSM standard
1	Failed. User Terminated Session: the text was displayed as requested and the user wants to end the proactive session. It corresponds to '10' Proactive session terminated by the user, described in the GSM standard
2	Failed. User requests backwards move: the text was displayed as requested and the user wants to go backwards in the session. It corresponds to '11' Backward move in the proactive SIM session requested by the user
3	Failed. No response from user: the text was displayed, and although the clear condition was "Wait for user to clear", the user did not react. It corresponds to '12' no response from user
4	Failed. Screen is busy: the text could not be displayed

Unsolicited Result Codes:

*E2STKD: <priority>,<clear_condition>,<coding>,<text_length>, <text>

Values follow GSM 11.14 standard.

<priority>	*Description*
0	Display normal priority text
1	Display high priority text

<clear_condition>	*Description*
0	Clear message after a dalay
1	Wait for user to clear message

<coding>	*Description*
0	Text is coded in unpacked format, using the SMS default 7-bit coded alphabet, as defined in GSM 03.38 with bit 8 set to 0. It corresponds to data coding scheme of 8 bit
1	Text is coded in packed format, using the SMS default 7-bit coded alphabet, packed in 8-bit octets, as defined in GSM 03.38. It corresponds to data coding scheme of 7 bit GSM default alphabet

<text_length>	*Description*
Integter type	Value indicating the maximum length of field <text>

<text>	*Description*
string type	Field of maximum length <text_length>, in string type format between "". Coding is defined in <coding>

*15.4 AT*E2STKG M2M STK Get Inkey*

Description	*Command*	*Possible responses*
Answer to the reception of GET INKEY	AT*E2STKG=<answer>, [<response_type>, <user_response>]	• +CME ERROR <err> • OK
Test if the command is supported	AT*E2STKG=?	• *E2STKG: (list of supported <answer>), (list of supported <response_type>), <user_response> • +CME ERROR <err> • OK • ERROR

The ME passes the parameters within GET INKEY command to the external application by means of the unsolicited result code E2STKG.

The external application then sends AT*E2STKG with the user response.

Answer command allows the external application to send the appropriate answer, after receiving the unsolicited result code, and before the timeout expires.

If Answer command is sent once the timeout expires, an ERROR response is generated.

If <answer> parameter is not 0, a failure has occurred and no more parameters are sent. If the extra parameters are sent, the ME indicates ERROR.

Test command returns the list of supported values, and the maximum value of <prompt_text_length>.

Values follow GSM 11.14 standard.

<answer>	*Description*
0	OK. Performed as required: the text was displayed. It corresponds to '00' Command performed successfully, described in the GSM standard
1	Failed. User Terminated Session: the text was displayed as requested and the user wants to end the proactive session. It corresponds to '10' Proactive session terminated by the user, described in the GSM standard
2	Failed. User requests backward move: the text was displayed as requested and the user wants to go backwards in the session. It corresponds to '11' Backward move in the proactive SIM session requested by the user
3	Failed. No response from user: the text was displayed, and the user did not react. It corresponds to '12' No response from user
4	Failed. Screen is busy: the text could not be displayed

<response_type>	*Description*
0	Response type shall be digits (0-9, *, # and +)
1	Response type shall be SMS default alphabet
3	Response type shall be "Yes/No" response

<user_response>	*Description*
String type	Field of 1 to 2 bytes length in string type format between "". Coding is defined in <response_type>. Length shall be 2 bytes when coding is UCS2 . Otherwise it shall be 1 byte

Unsolicited Result Codes:

*E2STKG: <coding>,<prompt_text_length>,<prompt_text>

Values follow GSM 11.14 standard.

<coding>	*Description*
0	Text is coded in unpacked format, using the SMS default 7-bit coded alphabet, as defined in GSM 03.38 with bit 8 set to 0. It corresponds to data coding scheme of 8 bit
1	Text is coded in packed format, using the SMS default 7-bit coded alphabet, packed in 8-bit octets, as defined in GSM 03.38. It corresponds to data coding scheme of 7 bit GSM default alphabet

<prompt_text_length>	*Description*
Integer type (0-235)	Value indicating the maximum length of field <prompt_text>

<prompt_text>	*Description*
String type	Field of maximum length <prompt_text_length>, in string type format between “”. Coding is defined in <prompt_coding>.

15.5 AT*E2STKI M2M STK Get Input

Description	*Command*	*Possible responses*
Answer to the reception of GET INPUT	AT*E2STKI=<answer>, [<response_type>, <response_length>, <user_response>]	• +CME ERROR <err> • OK • ERROR
Test if the command is supported	AT*E2STKI=?	• *E2STKI: (list of supported <answer>),(list of supported <response_type>), <response_length>, <user_response> • +CME ERROR <err> • OK • ERROR

The ME passes the parameters within GET INPUT command to the external application by means of the unsolicited result code E2STKI. The external application sends AT*E2STKI with the user response.

AT*E2STKI allows the external application to send the appropriate answer after receiving the unsolicited result code, and before the timeout expires.

If Answer command is sent once the timeout expires, an ERROR response is generated.

If <answer> parameter is not 0, a failure has occurred and no more parameters are sent. If the extra parameters are sent, the ME indicates ERROR.

Test command returns the list of suported values, and <prompt_text_length>.

Values follow GSM 11.14 standard.

<answer>	*Description*
0	OK. Performed as required: the text was displayed. It corresponds to '00' command performed succesfully, described in the GSM standard
1	Failed. User terminated session: the text was displayed as requested and the user wants to end the proactive session. It corresponds to '10' proactive session terminated by the user, described in the GSM standard
2	Failed. User requests backward move: the text was displayed as requested and the user wants to go backwards in the session. It corresponds to '11' backward move in the proactive SIM session requested by the user
3	Failed. No response from user: the text was displayed, and the user did not react. It corresponds to '12' No response from user
4	Failed. Screen is busy: the text could not be displayed

<response_type>	*Description*
0	Response type shall be digits (0-9, *, # and +)
1	Response type shall be SMS default alphabet
3	Response type shall be "Yes/No" response

<response_length>	*Description*
Integer type (0-160)	Value indicating the length of response field <user_response>. It shall be an integer within the range between <min_length_response> and <max_length_response>

<user_response>	*Description*
String type	Field of length between <min_length_response> and <max_length_response>, in string type format between "". Coding is defined in <response_type>.

Note! If <response_type>=3 (Yes/No), the length of <user_response> is 1 byte. Otherwise, the ME gives an ERROR message.

Unsolicited Result Codes:

*E2STKI: <min_length_response>,<max_length_response>, <echo_input>,<prompt_coding>,<prompt_text_length>, <prompt_text>

Values follow GSM 11.14 standard.

<min_length_response>	*Description*
Integer type (0-160)	Value indicating the minimum length of response field <user_response>

<max_length_response>	*Description*
Integer type (0-160)	Value indicating the maximum length of response field <user_response>

<echo_input>	*Description*
0	The user input shall be echoed
1	The user input shall be hidden

<prompt_coding>	*Description*
0	Text is coded in unpacked format, using the SMS default 7-bit coded alphabet, as defined in GSM 03.38 with bit 8 set to 0. It corresponds to data coding scheme of 8 bit
1	Text is coded in packed format, using the SMS default 7-bit coded alphabet, packed in 8-bit octets, as defined in GSM 03.38. It corresponds to data coding scheme of 7 bit GSM default alphabet
2	Text is coded in UCS2 alphabet, as defined in GSM 03.38. It corresponds to data coding scheme of 16 bit UCS2 alphabet

<prompt_text_length>	*Description*
Integer type	Value indicating the maximum length of field <prompt_text>

<prompt_text>	*Description*
String type	Field of maximum length <prompt_text_length>, in string type between “”. Coding is defined in <prompt_coding>

15.6 AT*E2STKL M2M STK Select Item

Description	*Command*	*Possible responses*
Answer to the reception of SELECT ITEM	AT*E2STKL=<answer>, [<user_response>]	• +CME ERROR <err> • OK • ERROR
Test if the command is supported	AT*E2STKL=?	• *E2STKL: (list of supported <answer>), (list of supported <user_response>) • +CME ERROR <err> • OK • ERROR

The ME passes the parameters within SELECT ITEM command to the external application by means of the unsolicited result code *E2STKL.

Command AT*E2STKL allows the external application to send the appropriate answer after receiving the unsolicited result code, and before the timeout expires.

If Answer command is sent once the timeout expires, an ERROR response is be generated.

If <answer> parameter is not 0, a failure has occurred and no more parameters are sent. If the extra parameters are sent, the ME indicates ERROR.

Values follow GSM 11.14 standard.

<answer>	*Description*
0	OK. Performed as required. It corresponds to '00' command performed succesfully, described in the GSM standard
1	Failed. User terminated session. It corresponds to '10' Proactive session terminated by the user, described in the GSM standard
2	Failed. User requests backwards move. It corresponds to '11' Backward move in the proactive SIM session requested by the user
3	Failed. No response from user. It corresponds to '12' no response from user
4	Failed. Screen is busy: the text could not be displayed

<user_response>	*Description*
integer type	The identifier is a single byte between 1 and 255. It identifies the selected <item_idn> within the items list

Unsolicited Result Codes:

E2STKL: <NbrOfItems>,<coding>,<text_length>,<alpha_id> [,<default>]<CR><LF>E2STKL: <item_id1>,<coding>, <text_length>,<item1><CR><LF>[…]E2STKL: <item_idn>, <coding>,<text_length>,<itemn><CR><LF>]

Values follow GSM 11.14 standard.

<coding>	*Description*
0	Text is coded in unpacked format, using the SMS default 7-bit coded alphabet, as defined in GSM 03.38 with bit 8 set to 0. It corresponds to data coding scheme of 8 bit
1	Text is coded in packed format, using the SMS default 7-bit coded alphabet, packed in 8-bit octets, as defined in GSM 03.38. It corresponds to data coding scheme of 7 bit GSM default alphabet

<text_length>	*Description*
Integer type (0-240)	Value indicating the maximum length of field <alpha_id>, <itemn1>,.<Itemn>

<alpha_id>	*Description*
String type	Field of string type between “”. Coding is according to EF_{AND} as defined in GSM 11.11

The maximum length is fixed

<default>	*Description*
Integer type	The <default> parameter is a single byte between 1 and 255. It shows the default/selected item within the list

<item_idn>	*Description*
Integer type	The identifier is a single byte between 1 and 255. Each item <itemn> in the list shall have a unique identifer <item_idn>

<itemn>	*Description*
String type	Field of string type between “”. Coding is according to EF_{AND} as defined in GSM 11.11

<NbrOfItems>	*Description*
Integer type	Number of items to be presented in the following unsolicited results

The maximum length is fixed.

15.7 AT*E2STKM M2M STK Set Up Menu

Description	*Command*	*Possible responses*
Answer to the reception of SET UP MENU	AT*E2STKM=<answer>, <on_off>	• +CME ERROR <err> • OK • ERROR
Test if the command is supported	AT*E2STKM=?	• *E2STKM: (list of supported <answer>),(list of supported <on_off>) • +CME ERROR <err> • OK • ERROR

The ME passes the parameters within SET UP MENU command to the external application, so that the STK menu can be built externally, by means of the unsolicited result code *E2STKM.

The current menu can be removed by sending only the parameter <on_off> = 0.

Answer command allows the external application to send the appropriate answer after receiving the unsolicited result code, and before the timeout expires.

If Answer command is sent once the timeout expires, an ERROR response is generated.

Values follow GSM 11.14 standard.

<answer>	*Description*
0	OK. Performed as required: it corresponds to '00' command performed successfully, described in the GSM standard
1	Failed. User Terminated Session: the command was executed as requested and the user wants to end the proactive session. It corresponds to '10' proactive session terminated by the user, described in the GSM standard
2	Failed. User requests backwards move: the command was executed as requested and the user wants to go backwards in the session. It corresponds to '11' backward move in the proactive SIM session requested by the user
3	Failed. No response from user: the command was executed, and the user did not react. It corresponds to '12' no response from user
4	Failed. Screen is busy
5	Failed. Command beyond MEs capability. It corresponds to '30'. It was not possible to successfully integrate or remove the list of menu items

<on_off>	Description
0	Remove the current menu
1	New menu to be displayed

Unsolicited Result Codes:

*E2STKM: <NbrOfItems>,<coding>,<text_length>, <alpha_id><CR><LF>E2STKM: <item_id1>,<coding>, <text_length>,<item1>[<CR><LF>[…]E2STKM: <item_idn>, <coding>,<text_length>,<itemn>]

Values follow GSM 11.14 standard.

<coding>	Description
0	Text is coded in unpacked format, using the SMS default 7-bit coded alphabet, as defined in GSM 03.38 with bit 8 set to 0. It corresponds to data coding scheme of 8 bit
1	Text is coded in packed format, using the SMS default 7-bit coded alphabet, packed in 8-bit octets, as defined in GSM 03.38. It corresponds to data coding scheme of 7 bit GSM default alphabet

<text_length>	Description
Integer type	Value indicating the maximum length of field <alpha_id>, <itemn1>, <Itemn>

<alpha_id>	Description
String type	Field of string type between "". Coding is according to EF_{AND} as defined in GSM 11.11

The maximum length is fixed.

<item_idn>	Description
Integer type	The identifier is a single byte between 1 and 255. Each item <itemn> in the list shall have a unique identifer <item_idn>

<itemn>	Description
String type	Field of string type format between “”. Coding is according to EF_{AND} as defined in GSM 11.11

<NbrOfItems>	Description
Integer type	Number of Items to be presented in the following unsolicited results

The maximum length is fixed.

The parameters have no default values.

15.8 AT*E2STKN M2M STK Envelope (Menu Selection)

Description	*Command*	*Possible responses*
Do the menu selection	AT*E2STKN=<sel_item>	• +CME ERROR <err> • OK • ERROR
Test if the command is supported	AT*E2STKN=?	• *E2STKN: (list of supported <sel_item>) • +CME ERROR <err> • OK • ERROR

The application informs the ME about the selected menu item by means of the AT*E2SKTN command. The ME answers with OK, or ERROR.

The Do command allows the external application to select the menu item in the item list that was created by means of the SET-UP MENU command.

<sel_item>	*Description*
Integer type	The identifier is a single byte between 1 and 255. It identifies the selected menu item corresponding to SET-UP MENU command. Values follow the definition described in GSM 11.14

15.9 AT*E2STKC M2M STK Set Up Call

Description	*Command*	*Possible responses*
Answer to the reception of SET UP CALL	AT*E2STKC=<answer>	• +CME ERROR <err> • OK • ERROR
Test if the command is supported	AT*E2STKC=?	• *E2STKC: (list of supported <answer>) • +CME ERROR <err> • OK • ERROR

The ME passes the parameters within SET UP CALL command to the external application by means of the unsolicited result code *E2STKC, so that it takes up the decision on progressing or rejecting the call.

Answer command allows the external application to send the appropriate answer after receiving the unsolicited result code, and before the timeout expires.

If Answer command is sent once the timeout expires, an ERROR response is generated.

Values follow GSM 11.14 standard.

<answer>	*Description*
0	OK. Performed as required. It corresponds to '00' command performed succesfully, described in the GSM standard
1	Failed. User terminated session. It corresponds to '10' Proactive session terminated by the user, described in the GSM standard
2	Failed. User requests backwards move. It corresponds to '11' backward move in the proactive SIM session requested by the user
3	Failed. No response from user. It corresponds to '12' no response from user
4	Failed. Screen is busy: the text could not be displayed
6	Failed. User rejected call set-up request. It corresponds to '22'
7	Failed. User cleared down call before connection or network release. It corresponds to '23'

Unsolicited Result Codes:

*E2STKC: <ton>,<dial_string>,<SetUpRequirement>,<coding>, <text_length>,<alpha_id>

Values follow GSM 11.14 standard.

<ton>	*Description*
Integer type	Field of 1 byte indicating the Type of Number, coded as for EF_{AND}. See GSM 04-08, section 10.5.4.7 for the allowed values

<dial_string>	*Description*
String type	Phone number of format <ton>

<coding>	*Description*
0	Text is coded in unpacked format, using the SMS default 7-bit coded alphabet, as defined in GSM 03.38 with bit 8 set to 0. It corresponds to data coding scheme of 8 bit
1	Text is coded in packed format, using the SMS default 7-bit coded alphabet, packed in 8-bit octets, as defined in GSM 03.38. It corresponds to data coding scheme of 7 bit GSM default alphabet

<text_length>	*Description*
Integer type (0-240)	Value indicating the maximum length of field <alpha_id>

<alpha_id>	*Description*
String type	Field of string type between "". Coding is according to EF_{AND} as defined in GSM 11.11

The maximum length is fixed

15.10 *E2STKE STK Send Short Message

Unsolicited Result Code:

*E2STKE: <coding>, < text_length >, <alpha_id>

The ME passes the <alpha_id> within SEND SHORT MESSAGE command to the external application, by means of the unsolicited result code *E2STKE. This informs the external application that the ME is sending an SMS.

<coding>	*Description*
0	Text is coded in unpacked format, using the SMS default 7-bit coded alphabet, as defined in GSM 03.38 with bit 8 set to 0. It corresponds to data coding scheme of 8 bit
1	Text is coded in packed format, using the SMS default 7-bit coded alphabet, packed in 8-bit octets, as defined in GSM 03.38. It corresponds to data coding scheme of 7 bit GSM default alphabet

<text_length>	*Description*
Integer type (0-240)	Value indicating the maximum length of field <alpha_id>

<alpha_id>	*Description*
String type	Field of string type format between "". Coding is according to EF_{AND} as defined in GSM 11.11
'FF'	In case that the SIM does not provide the optional alpha identifier, or this is a null data object, the ME shall give 'FF' to indicate "Sending SMS", so that the external application is informed

The maximum length is fixed.

15.11 *E2STKP STK Send SS

Unsolicited Result Code:

*E2STKP: <ton>, <SS_string>, <coding>, <text_length>, <alpha_id>, <SS_return>

The ME passes the parameters within SEND SS command to the external application, by means of the unsolicited result code *E2STKP. This informs the external application that the ME has sent an SS string to the network, and provides the current status after this operation.

<ton>	*Description*
integer type	Field of 1 byte indicating the Type of Number, coded as for EF_{AND}. See GSM 04-08, section 10.5.4.7 for the allowed values

<SS_string>	*Description*
String type	SS string of format <ton>

<coding>	*Description*
0	Text is coded in unpacked format, using the SMS default 7-bit coded alphabet, as defined in GSM 03.38 with bit 8 set to 0. It corresponds to data coding scheme of 8 bit
1	Text is coded in packed format, using the SMS default 7-bit coded alphabet, packed in 8-bit octets, as defined in GSM 03.38. It corresponds to data coding scheme of 7-bit GSM default alphabet

<text_length>	*Description*
Integer type (0-240)	Value indicating the maximum length of field <alpha_id>

<alpha_id>	*Description*
String type	Field of string type format between “”. Coding is according to EF_{AND} as defined in GSM 11.11
‘FF’	In case that the SIM does not provide the optional alpha identifier, or this is a null data object, the ME shall give ‘FF’ to indicate “SS string sent” so that the external application is informed

The maximum length is fixed.

<SS_return>	*Description*
Integer type	Field of 1 byte indicating the SS Return Result Operation code, as defined in GSM 04.80, so that the external application is informed about the result of the SS operation

15.12 *E2STKU STK Send USSD

Unsolicited Result Code:

*E2STKU: <coding>, <text_length>, <alpha_id>

Description:

The ME shall passes the <alpha_id> parameter within SEND USSD command to the external application, by means of the unsolicited result code *E2STKU. This informs the external application that the ME is sending a USSD string to the network.

<coding>	*Description*
0	Text is coded in unpacked format, using the SMS default 7-bit coded alphabet, as defined in GSM 03.38 with bit 8 set to 0. It corresponds to data coding scheme of 8 bit
1	Text is coded in packed format, using the SMS default 7-bit coded alphabet, packed in 8-bit octets, as defined in GSM 03.38. It corresponds to data coding scheme of 7-bit GSM default alphabet

<text_length>	*Description*
Integer type (0-240)	Value indicating the maximum length of field <alpha_id>

<alpha_id>	*Description*
String type	Field of string type format between "". Coding is according to EF_{AND} as defined in GSM 11.11
'FF'	In case that the SIM does not provide the optional alpha identifier, or this is a null data object, the ME shall give 'FF' to indicate "SS string sent" so that the external application is informed

The maximum length is fixed.

15.13 *E2STKR STK Refresh

Unsolicited Result Code:

*E2STKR: <indicator>

The ME informs the external application about the coming REFRESH command, by means of the unsolicited result code *E2STKR (eg Reset is coming).

<indicator>	*Description*
Integer type	Indicator describes the mode that the SIM has requested when sending a REFRESH command
0	SIM initialization and full file change notification
1	File change notification
2	SIM initialization and file change notification
3	SIM initialization
4	SIM reset

15.14 AT*E2STKTO SIM Application Toolkit Settings

Parameter Command Syntax:

AT*E2STKTO = <Command>, <timer>

This command allows the external application to configure some general settings related to STK.

Defined values:

Parameter <Command> is used to define the command that the time parameter is going to be applied.

Parameter <timer> is used to fix the timeout period applicable to Proactive SIM mechanism.

<Command>	*Description*
Integer type (0-6)	It defines the command that the time parameter is going to be applied
0	All the commands with timeout associated are set to the value of <timer>
1	Set Up Menu command timeout is set to the value of <timer>

<Command>	*Description*
2	Set Up Call command timeout is set to the value of <timer>
3	Display Text command timeout is set to the value of <timer>
4	Get Input command timeout is set to the value of <timer>
5	Select Item command timeout is set to the value of <timer>

<timer>	*Description*
Integer type (0-99)	Specifies the value in seconds to be set in the timeout associated with the command specified in <command>
0	All the commands timeouts are set to its default value
(1-99)	The timeout of the command specified in <command> is set to this value

Unsolicited result code:

*E2STKTO: <command>

16. Supplementary Services

16.1 AT+CPIN PIN Control

See 3.23, AT+CPIN PIN Control

16.2 AT+CACM Accumulated Call Meter

Description	*Command*	*Possible Responses*
Reset the ACM (Accumulated Call Meter) value on the SIM	AT+CACM=[<passwd>]	• +CME ERROR: <err> • OK • ERROR
Show the current value	AT+CACM?	• +CACM: <acm> +CME ERROR: <err> • OK • ERROR
Tests if the command is supported	AT+CACM=?	• +CME ERROR: <err> • OK • ERROR

Resets the Advice of Charge related accumulated call meter value in SIM file EF_{ACM}. ACM contains the total number of home units for both the current and preceding calls. SIM PIN2 is usually required to reset the value. If setting fails in an ME error, +CME ERROR: <err> is returned. See “+CME ERROR (Mobile Equipment Error Code)”, page 55.

Note! This command must take into account what line is chosen with AT*ELIN.

Read command returns the current value of ACM.

<passwd>	*Description*
String type	SIM-PIN2

<acm>	*Description*
String type	Accumulated call meter value similarly coded as <ccm> under +CAOC

16.3 AT+CAMM Accumulated Call Meter Maximum

Description	*Command*	*Possible Responses*
Set command sets the Advice of Charge related accumulated call meter maximum value in SIM file EF_{ACMmax}	AT+CAMM=[<acmmax> [,<passwd>]]	• +CME ERROR: <err> • OK • ERROR
Read the current value	AT+CAMM?	• +CAMM: <acmmax> +CME ERROR: <err> • OK • ERROR
Test if the command if supported	AT+CAMM=?	• +CME ERROR: <err> • OK • ERROR

Sets the Advice of Charge related accumulated call meter maximum value in SIM file EF_{ACMmax}. ACMmax contains the maximum number of home units allowed to be consumed by the subscriber. When ACM (refer +CACM) reaches ACMmax calls are prohibited. SIM PIN2 is usually required to set the value. If setting fails in an ME error, +CME ERROR: <err> is returned.

Read command returns the current value of ACMmax.

<acmmax>	*Description*
String type	Accumulated call meter maximum value similarly coded as <ccm> under +CAOC; value zero disables ACMmax feature

<passwd>	*Description*
String type	SIM PIN2

16.4 AT+CAOC Advice of Charge

Description	*Command*	*Possible Responses*
Execute command	AT+CAOC[=<mode>]	• [+CAOC: <ccm>] *+CME ERROR: <err>* • *OK* • *ERROR*
Read command, shows the current mode	AT+CAOC?	• +CAOC: <mode> • OK • ERROR
Test command, shows if the command is supported	AT+CAOC=?	• [+CAOC: (list of supported <mode>s] • OK • ERROR

Use of Advice of Charge supplementary service command enables the subscriber to get information about the cost of calls. With <mode>=0, the execute command returns the current call meter value from the ME. The command also includes the possibility to enable an unsolicited event reporting of the CCM information. The unsolicited result code +CCCM: <ccm> is sent when the CCM value changes, but no more than every 10 seconds. Deactivation of the unsolicited event reporting is made with the same command.

Read command indicates whether the unsolicited reporting is activated or not. Read command is available when the unsolicited result code is supported.

It is recommended (although optional) that the test command return the supported mode values.

<mode>	*Description*
0	Query CCM value
1	Deactivate the unsolicited reporting of CCM value
2	Activate the unsolicited reporting of CCM value

<ccm>	*Description*
String type	Three bytes of the current call meter value in hexadecimal format (e.g. “00001E” indicates decimal value 30); value is in home units and bytes are similarly coded as ACMmax value in the SIM

16.5 AT+CPUC Price Per Unit and Currency Table

Description	*Command*	*Possible Responses*
Set command sets the parameters of Advice of Charge related price per unit and currency table in SIM file EF_{PUCT}	AT+CPUC=<currency>, <ppu>[,<passwd>]	• +CME ERROR: <err> • OK • ERROR
Shows the current values	AT+CPUC?	• +CPUC: <currency>,<ppu> +CME ERROR: <err> • OK • ERROR
Shows if the command is supported	AT+CPUC=?	• OK • ERROR

Sets the parameters of Advice of Charge related price per unit and currency table in SIM file EF_{PUCT}. PUCT information can be used to convert the home units (as used in +CAOC, +CACM and +CAMM) into currency units. SIM PIN1 or SIM PIN2 (depending on which SIM card that is used) is required to set the parameters. If setting fails in an ME error, +CME ERROR: <err> is returned.

Read command returns the current parameters of PUCT.

For information on the character set see AT+CSCS in the Short Message Services section.

<currency>	*Description*
String	Alpha-identifier of the currency code (3 characters, e.g. SEK)

<ppu>	*Description*
String type	price per unit; dot is used as a decimal separator (e.g. "2.66")

<passwd>	*Description*
String type	SIM PIN1 or SIM PIN2

16.6 AT*EDIF Ericsson Divert Function

Description	*Command*	*Possible Responses*
Enable and disable notification with the unsolicited result code *EDIF	AT*EDIF=<onoff>	• +CME ERROR: <err> • OK • ERROR
Show the current setting	AT*EDIF?	• *EDIF: <onoff> +CME ERROR: <err> • OK • ERROR
Show if the command is supported	AT*EDIF=?	• *EDIF: (list of supported <onoff>s) • +CME ERROR: <err> • OK • ERROR

This command enables and disables notification of divert status changes with the unsolicited result code *EDIF.

<onoff>	*Description*
0	Disable notification with the unsolicited result code *EDIF
1	Enable notification with the unsolicited result code *EDIF

Unsolicited Result Codes:

*EDIF: <reason>,<status>,<classx>[,<number>,<type>]

16.7 AT*EIPS Identity Presentation Set

Description	*Command*	*Possible Responses*
Sets the alpha tag to be displayed in the ME	AT*EIPS=<ID>, <alphatag mode>	• +CME ERROR: <err> • OK • ERROR
Read the current setting	AT*EIPS?	• *EIPS: <ID1>,<alphatag mode1><CR><LF> *EIPS: <ID2>,<alphatag mode2><CR><LF> • +CME ERROR: <err> • OK • ERROR
Test if the command is supported and list the possible settings	AT*EIPS=?	• *EIPS: (list of supported ID>s),(list of supported <alphatag mode>s) • +CME ERROR: <err> • OK • ERROR

This command enables or disables the presentation of the alpha tag of the Caller ID and Called ID to the TE if the ID is recognized. The alpha tag is the first name and the last name. The presentation is done by an unsolicited result code, *ELIP for Caller ID and *EOLP for Called ID.

<ID>	*Description*
1	Caller ID (*ELIP)
2	Called ID (*EOLP)

<alphatag mode>	*Description*
0	Off
1	First name and last name displayed

Unsolicited Result Codes:

*ELIP:<alpha tag>

*EOLP:<alpha tag>

16.8 AT*ELIN Ericsson Line Set

Description	Command	Possible Responses
Set the current line to <line>	AT*ELIN=<line>	• *ELIN: <line> • +CME ERROR: <err> • OK • ERROR
Read the current line	AT*ELIN?	• *ELIN: <line> • +CME ERROR: <err> • OK • ERROR
Test if the command is supported	AT*ELIN=?	• *ELIN: list of supported <line>s +CME ERROR: <err> • OK • ERROR

This command requests the ME to set the current line to <line>.

Note! The following command reads its value from the current line and is thus affected by the use of *ELIN:

AT+CACM - Accumulated Call Meter

<line>	Description
1	L1
2	L2

16.9 AT*E2SSD M2M Supplementary Service Dispatch

Description	Command	Possible Responses
Send Supplementary Service command	AT*E2SSD=<SS_String>	• OK • ERROR
Shows if the command is supported	AT*E2SSD=?	• OK • ERROR

This command allows the user to send a Public MMI command string in order to activate, deactivate, interrogate or modify settings for Supplementary Services.

Once a string is sent, the command will return OK if parsed and sent successfully, otherwise ERROR is returned. The command does not verify that the operation executes successfully - use the AT*E2SSI command to gain feedback of the operation status.

Refer to GSM 02.30 for Public MMI services and codes.

<SS_String>	*Description*
String Type	String in double quotes, containing a Public MMI command to modify, activate, interrogate or deactivate a Supplementary Service. String can contain values '0-9', '*' and '#'

16.10 AT*E2SSI M2M Supplementary Service Indications

Description	*Command*	*Possible Responses*
Set Supplementary Service indications	AT*E2SSI=<op>	• ERROR • OK
Displays current settings	AT*E2SSI?	*E2SSI: <op>
Shows if the command is supported	AT*E2SSI=?	• *E2SSI: (list of supported <op>s) • ERROR

This command allows the user to display the unsolicited response code *E2SSI on network responses (either command confirmation or error responses) for Supplementary Services. This can be used in conjunction with the AT+CSSN command which gives responses on the network notification of SS status.

The default setting is OFF, where responses are disabled.

<op>	*Description*
0	Disable *E2SSI indications. **Default value**
1	Enable *E2SSI indications

Unsolicited Result codes:

*E2SSI: <errorcode>[,<Opcode>[,<SS_Code>,[<BasicServChoice>, <BasicServValue>],[<SS_Status>],[<ForwardedToNr>], [<NoReplyConditionTime>], [<CLI_RestrictionOption>]]]

or

*E2SSI: <errorcode>[,<Opcode>[,<SS_Code>,[<BasicServChoice>, <BasicServValue>],[<SS_Status>],[<SubscriptionOption>]]]

<errorcode>	*Description*
0	OK (no error)
1	SSI_PASSWORD_ERROR
2	SSI_TOO_MANY_PARTS
3	SSI_COMMAND_ERROR

<errorcode>	*Description*
4	SSI_SIM_ERROR
5	SSI_NUMBER_ERR
6	SSI_CALL_BARRED
7	SSI_NOT_AVAILABLE
8	SSI_UNSUCCESSFUL
9	SSI_NOT_ALLOWED
10	SSI_NETWORK_PROBLEM

<Opcode>	*Description*
10	REGISTER_SS
11	ERASE_SS
12	ACTIVATE_SS
13	DEACTIVATE_SS
14	INTERROGATE_SS

<SScode>	*Description*
0	ALL_SS
16	ALL_LINE_IDENTIFICATION_SERVICES
17	CALLING_LINE_IDENTIFICATION_PRESENTATION
18	CALLING_LINE_IDENTIFICATION_RESTRICTION
19	CONNECTED_LINE_IDENTIFICATION_PRESENTATION
20	CONNECTED_LINE_IDENTIFICATION_RESTRICTION
21	MALICIOUS_CALL_IDENTIFICATION
32	ALL_FORWARDING_SERVICES
33	CALL_FORWARDING_UNCONDITIONAL
40	ALL_CONDITIONAL_FORWARDING_SERVICES
41	CALL_FORWARDING_ON_MOBILE_SUBSCRIBER_BUSY
42	CALL_FORWARDING_ON_NO_REPLY
43	CALL_FORWARDING_ON_SUBSCRIBER_NOT_REACHABLE
49	EXPLICIT_CALL_TRANSFER
64	ALL_CALL_COMPLETION_SERVICES
65	CALL_WAITING
66	CALL_HOLD
67	COMPLETION_OF_CALL_TO_BUSY_SUBSCRIBER

<SScode>	*Description*
81	MULTI_PARTY
112	ALL_CHARGING_SS
113	ADVICE_OF_CHARGE_INFORMATION
114	ADVICE_OF_CHARGE_CHARGING
144	ALL_BARRING_SERVICES
145	BARRING_OF_OUTGOING_CALLS
146	BARRING_OF_ALL_OUTGOING_CALLS
147	BARRING_OF_ALL_OUTGOING_INTERNATIONAL_CALLS
148	BARRING_OF_ALL_OG_INTERNATIONAL_NON_HPLMN_ DIRECTED_CALLS
153	BARRING_OF_INCOMING_CALLS
154	BARRING_OF_ALL_INCOMING_CALLS
155	BARRING_OF_ALL_IC_CALLS_WHEN_OUTSIDE_HPLMN

<BasicServChoice>	*Description*
2	BEARER_SERVICE
3	TELE_SERVICE

<BasicServValue>	*Description*	
	<TELE_SERVICE>	*<BEARER_SERVICE>*
0	TS_ALL_TELE_SERVICES	BS_ALL_BEARER_SERVICES
16	TS_SPEECH	BS_ALL_DATA_CDA_SERVICES
17	TS_TELEPHONY	BS_DATA_CDA_300BPS
18	TS_EMERGENCY_CALLS	BS_DATA_CDA_1200BPS
20		BS_DATA_CDA_2400BPS
21		BS_DATA_CDA_4800BPS
22		BS_DATA_CDA_9600BPS
24		BS_ALL_DATA_CDS_SERVICES
25		BS_DATA_CDS_300BPS
26		BS_DATA_CDS_1200BPS
28		BS_DATA_CDS_2400BPS
29		BS_DATA_CDS_4800BPS
30		BS_DATA_CDS_9600BPS
32	TS_ALL_SHORT_MESSAGE_SERVICES	BS_ALL_PAD_ACCESS_CA_SERVICES

<BasicServValue>	*Description*	
	<TELE_SERVICE>	*<BEARER_SERVICE>*
33	TS_SHORT_MESSAGE_MT_PP	BS_PAD_ACCESS_CA_300BPS
34	TS_SHORT_MESSAGE_MO_PP	BS_PAD_ACCESS_CA_1200BPS
35		BS_PAD_ACCESS_CA_1200_75BPS
36		BS_PAD_ACCESS_CA_2400BPS
37		BS_PAD_ACCESS_CA_4800BPS
38		BS_PAD_ACCESS_CA_9600BPS
40		BS_ALL_DATA_PDS_SERVICES
44		BS_DATA_PDS_2400BPS
45		BS_DATA_PDS_4800BPS
46		BS_DATA_PDS_9600BPS
48		BS_ALL_ALTERNATE_SPEECH_DATA_CDA
56		BS_ALL_ALTERNATE_SPEECH_DATA_CDS
64	TS_VIDEOTEX	BS_ALL_SPEECH_FOLLOWED_BY_DATA_CDA
72		BS_ALL_SPEECH_FOLLOWED_BY_DATA_CDS
80	TS_TELETEX	BS_ALL_DATA_CIRCUIT_ASYNCHRONOUS
88		BS_ALL_DATA_CIRCUIT_SYNCHRONOUS
96	TS_ALL_FAX_SERVICES	BS_ALL_ASYNCHRONOUS_SERVICES
97	TS_FAX_GROUP3_ALTER_SPEECH	
98	TS_AUTOMATIC_FAX_GROUP3	
99	TS_FAX_GROUP4	
104		BS_ALL_SYNCHRONOUS_SERVICES
112	TS_ALL_DATA_SERVICES	
120		BS_12_KBIT_UNRESTRICTED_DIGITAL
128	TS_ALL_TELESERVICES_EXCEPT_SMS	
208	TS_AUXILIARY_SPEECH	
209	TS_AUXILIARY_TELEPHONY	

<SS_Status>	*Description*
0	NO_FLAG_SET
1	SS_STATUS_ACTIVE
2	SS_STATUS_REGISTERED

<SS_Status>	*Description*
4	SS_STATUS_PROVISIONED
7	SS_STATUS_PRA

<ForwardedToNr>	*Description*
String	Phone number string in double quotes

<NoReplyConditionTime>	*Description*
0-65532	Integer value for time

<CLI_Restriction Option>	*Description*
0	PERMANENT
1	TEMPORARY_DEFAULT_RESTRICTED
2	TEMPORARY_DEFAULT_ALLOWED

<Subscription Option>	*Description*
1	OVERRIDE_CATEGORY
2	CLI_RESTRICTION_OPTION
5	RESTRICTION_PER_CALL

16.11 AT+CCFC Call Forwarding number and Conditions

Description	*Command*	*Possible Responses*
Request Calling forwarding number and conditions	AT+CCFC=<reason>,<mode>[,<number>[,<type>[,<class>[,<satype>]]]]	• +CME ERROR <err> • when <mode>=2 and command successful: +CCFC: <status>,<class1>[,<number>,<type>[,<satype>]][<CR><LF> +CCFC: <status>,<class2>[,<number>,<type>[,<satype>]][...]] • OK • ERROR
Show if the command is supported	AT+CCFC=?	• + CCFC: (list of supported <reason>s) • +CME ERROR <err> • OK • ERROR

This command allows control of the call forwarding supplementary service. Registration, erasure, activation, deactivation, and status query are supported. When querying the status of a network service (<mode>=2) the response line for 'not active' case (<status>=0) should be returned only if service is not active for any <class>.

<reason>	*Description*
0	Unconditional
1	Mobile busy
2	No reply
3	Not reachable
4	All call forwarding
5	All conditional call forwarding

<mode>	*Description*
0	Disable
1	Enable
2	Query status
3	Registration
4	Erasure

<number>	*Description*
string type	String type phone number of forwarding address in format specified by <type>

<type>	*Description*
integer format	Type of address octet
129	ISDN/telephony numbering plan, national/international unknown. **Default value if '+' is not in <sca>**
145	ISDN/telephony numbering plan, international number. **Default value if '+' is in <sca>**
161	ISDN/telephony numbering plan, national number
128 - 255	Other values

<satype>	*Description*
integer format	Type of subaddress octet
128	NSAP (X.213/ISO 8348 AD2), even number of address signals
136	NSAP (X.213/ISO 8348 AD2), odd number of address signals
160	User defined, even number of address signals
168	User defined, odd number of address signals
128 - 255	Other values reserved

<classx>	*Description*
integer	Sum of integers each representing a class of information. **Default value is 7**
1	Voice L1
2	Data
4	Fax
8	Short message service
16	Data circuit sync
32	Data circuit async
64	Dedicated packet access
128	Dedicated PAD access

<status>	*Description*
0	Not active
1	Active

16.12 AT+CCWA Call Waiting

Description	*Command*	*Possible Responses*
Request call waiting	AT+CCWA=[<n> [,<mode> [,<class>]]]	• when<mode>=2 and command successful: +CCWA:<status>,<class1>[<CR> <LF> +CCWA: <status>,<class2>[...]] +CME ERROR <err> • OK • ERROR
Show the current setting	AT+CCWA?	• +CCWA: <n> +CME ERROR <err> • OK • ERROR
Show if the command is supported	AT+CCWA=?	• +CCWA: (list of supported <n>s) +CME ERROR <err> • OK • ERROR

This command allows control of the call waiting supplementary service according to 3GPP TS 22.083. Activation, deactivation and status query are supported. When querying the status of a network service (<mode>=2) the response line for 'not active' case (<status>=0) should be returned only if service is not active for any <class>. Parameter <n> is used to disable or enable the presentation of an unsolicited result code +CCWA: <number>,<type>,<class>,[<alpha>][,<CLI validity>] to the TE when call waiting service is enabled. The command is abortable when the network is interrogated.

The interaction of this command with other commands based on other GSM/UMTS supplementary services is described in the GSM/UMTS standards.

Test command returns values supported by the TA as a compound value.

<n>	*Description*
0	Disable
1	Enable

<mode>	*Description*
0	Disable
1	Enable
2	Query status

<classx>	*Description*
integer	Sum of integers each representing a class of information. **Default value is 7**
1	Voice L1
2	Data
4	Fax
8	Short message service
16	Data circuit sync
32	Data circuit async
64	Dedicated packet access
128	Dedicated PAD access

<status>	*Description*
0	Not active
1	Active

<number>	*Description*
String type	String type phone number of forwarding address in format specified by <type>

<type>	*Description*
Integer format	Type of address octet in integer format (GSM 04.08 10.5.4.7)

<err>	*Description*
0	Phone failure
3	Operation not allowed
4	Operation not supported
21	Invalid index
30	No network service
31	Network timeout
100	Unknown

Unsolicited Result Codes:

+CCWA: <number>, <type>, <class>

16.13 AT+CHLD Call Hold and Multiparty

Description	*Command*	*Possible Responses*
Request call related supplementary services	AT+CHLD=<n>	• +CME ERROR <err> • OK • ERROR
Show if the command is supported	AT+CHLD=?	• +CHLD: (list of supported <n>s) • +CME ERROR <err> • OK • ERROR

This command allows control of the following call related services:

- a call can be temporarily disconnected from the ME but the connection is retained by the network;
- multiparty conversation (conference calls);
- the served subscriber who has two calls (one held and the other either active or alerting) can connect the other parties and release the served subscriber's own connection.

Calls can be put on hold, recovered, released, added to conversation, and transferred similarly as defined in 3GPP TS 22.030.

This is based on the GSM/UMTS supplementary services HOLD (Call Hold; refer 3GPP TS 22.083 clause 2), MPTY (MultiParty; refer 3GPP TS 22.084) and ECT (Explicit Call Transfer; refer 3GPP TS 22.091). The interaction of this command with other commands based on other GSM/UMTS supplementary services is described in the GSM/UMTS standards.

Note! Call Hold and MultiParty are only applicable to teleservice 11.

It is recommended (although optional) that test command returns a list of operations which are supported. The call number required by some operations is denoted by “x” (e.g. +CHLD: (0,0x,1,1x,2,2x,3)).

<n>	*Description*
...	Integer type; equals to numbers entered before SEND button in GSM 02.30 subclause 4.5.5.1
0	Releases all held calls or sets User Determined User Busy (UDUB) for a waiting call
0X	Releases a specific call X from a held multiparty call
1	Releases all active calls (if any exist) and accepts the other (held or waiting) call
1X	Releases a specific active call X

<n>	Description
2	Places all active calls (if any exist) on hold and accepts the other (held or waiting) call
2X	Places all active calls on hold, except call X with which communication is supported
3	Adds a held call to the conversation
4	Connects the two calls and disconnects the subscriber from both calls (explicit call transfer)

"X" is the numbering (starting with 1) of the call given by the sequence of setting up or receiving the calls (active, held or waiting) as seen by the served subscriber. Calls hold their number until they are released. New calls take the lowest available number. Where both a held and a waiting call exists, the above procedures shall apply to the waiting call (i.e. not to the held call) in conflicting situation.

Note! The "directory number" case shall be handled with dial command D, and the END case with hangup command H (or +CHUP).

16.14 AT+CLIP Call Line Identification Presentation

Description	Command	Possible Responses
Requests calling line identification.	AT+CLIP=<n>	OK
Read the current setting	AT+CLIP?	+CLIP: <n>,<m>
Show if the command is supported	AT+CLIP=?	+CLIP: (list of supported <n>s)

This command enables a called subscriber to get the identity of the calling line when receiving a mobile terminated call. The "Set" command enables or disables the presentation of the CLI (calling line identity) at the TE. It has no effect on the execution of the supplementary service CLIP in the network.

When the presentation of the CLI at the TE is enabled (if the calling subscriber has allowed it), the unsolicited result code +CLIP:<number>,<type>,,,<alpha> response is returned after every RING (or +CRING:<type>) result code sent from TA to TE (refer to AT +CRC in section ???????).Whether this will be used when a normal voice call is answered is a manufacturer-specific option.

<n>	Description
0	Disables presentation. **Default value**
1	Enables presentation

<m>	Description
0	CLIP not provisioned
1	CLIP provisioned
2	Unknown (e.g. no network)

Unsolicited Result codes:

+CLIP: <number>, <type>,,,<alpha>

Defined values:

<number>	Description
String	Type phone number of format specified by <type> type of address octet in integer format (refer to GSM 04.08, sub-clause 10.5.4.7)

<type>	Description
129	129 ISDN/telephony numbering plan, national/ international unknown
145	145 ISDN/telephony numbering plan, international number
161	161 ISDN/telephony numbering plan, national number
128-255	Other values refer to GSM 04.08 section 10.5.4.7

16.15 AT+CLIR Calling Line Identification Restriction

Description	Command	Possible Responses
Request calling line identification restriction	AT+CLIR=[<n>]	• +CME ERROR <err> • OK • ERROR
Read the current setting	AT+CLIR?	• +CLIR: <n>,<m> • +CME ERROR <err> • OK • ERROR
Test if the command is supported	AT+CLIR=?	• +CLIR: (list of supported <n>s) • +CME ERROR <err> • OK • ERROR

This command refers to CLIR-service according to GSM 02.81 that allows a calling subscriber to enable or disable the presentation of the CLI to the called party when originating a call.

Set command overrides the CLIR subscription (default is restricted or allowed) when temporary mode is provisioned as a default adjustment for all following outgoing calls. Using the opposite command can

revoke this adjustment. If this command is used by a subscriber without provision of CLIR in permanent mode the network will act according GSM 02.81.

The setting shall be per logical channel.

When the MS is turned off and then turned on again the parameter setting <n> shall turn back to default, i.e. the presentation of CLI shall be used according to the subscription of the CLIR service, <n> is 0.

Read command gives the default adjustment for all outgoing calls (given in <n>), and also triggers an interrogation of the provision status of the CLIR service (given in <m>).

Test command returns values supported by the TA as a compound value.

Note! On a per call base CLIR functionality is explained in subclause "ITU-T V.25ter dial command".

<n>	*Description*
0	Presentation indicator is used according to the subscription of the CLIR service
1	CLIR invocation
2	CLIR suppression

<m>	*Description*
0	CLIR not provisioned
1	CLIR provisioned in permanent mode
2	Unknown (e.g. no network)
3	CLIR temporary mode presentation restricted
4	CLIR temporary mode presentation allowed

16.16 AT+CSSN Supplementary Service Notification

Description	*Command*	*Possible Responses*
Presentation of notification result codes from TA to TE	AT+CSSN=[<n>[,<m>]]	• +CME ERROR <err> • OK • ERROR
Read the current setting	AT+CSSN?	• +CSSN: <n>,<m> • +CME ERROR <err> • OK • ERROR
Test if the command is supported	AT+CSSN=?	• +CSSN: (list of supported <n>s),(list of supported <m>s) • +CME ERROR <err> • OK • ERROR

This command refers to supplementary service related network initiated notifications. The set command enables or disables the presentation of notification result codes from TA to TE.

When <n>=1 and a supplementary service notification is received after a mobile originated call setup, unsolicited result code +CSSI: <code1>[,<index>] is sent to TE before any other MO call setup result codes presented in this ETS or in V.25ter. When several different <code1>s are received from the network, each of them shall have its own +CSSI result code.

When <m>=1 and a supplementary service notification is received during a mobile terminated call setup or during a call, or when a forward check supplementary service notification is received, unsolicited result code +CSSU: <code2>[,<index>] is sent to TE. In case of MT call setup, result code is sent after every +CLIP result code (refer command “Calling line identification presentation +CLIP”) and when several different <code2>s are received from the network, each of them shall have its own +CSSU result code.

Note! The difference between <index> and <cindex> is that <index> is a position mark while <cindex> is a unique value for each CUG. <index> is not supported.

Test command returns values supported by the TA as a compound value.

<n>	*Description*
0	Disable the +CSSI result code presentation status in the TA
1	Enable the +CSSI result code presentation status in the TA

<m>	*Description*
0	Disable the +CSSU result code presentation status in the TA
1	Enable the +CSSU result code presentation status in the TA

<code1>	*Description*
0	Unconditional call forwarding is active
1	Some of the conditional call forwarding are active
2	Call has been forwarded
3	Call is waiting
4	This is a CUG call (also <index> present)
5	Outgoing calls are barred
6	Incoming calls are barred
7	CLIR suppression rejected

<index>	*Description*
0…9	CUG index
10	No index (preferred CUG taken from subscriber data)

<code2>	*Description*
0	This is a forwarded call (MT call setup)
1	This is a CUG call (also <index> present) (MT call setup)
2	Call has been put on hold (during a voice call)
3	Call has been retrieved (during a voice call)
4	Multiparty call entered (during a voice call)
5	Call on hold has been released (this is not a SS notification) (during a voice call)
6	Forward check SS message received (can be received whenever)
10	Incoming call has been forwarded

16.17 AT+CUSD Unstructured Supplementary Service Data

Description	*Command*	*Possible Responses*
Request unstructured supplementary service data	AT+CUSD=[<n>[,<str>]]	• +CME ERROR: <err> • OK
Show supported message types along with the current service setting	AT+CUSD?	• +CUSD: <n> • OK • ERROR
Show list of supported services	AT+CUSD=?	• +CUSD: (list of supported <n>s) • OK • ERROR

This command allows control of the Unstructured Supplementary Service Data (USSD) according to GSM 02.90. Both network and mobile initiated operations are supported. Parameter <n> is used to disable/enable the presentation of an unsolicited result code (USSD response from the network, or network initiated operation) +CUSD: <m>[,<str>,<dcs>] to the TE. In addition, value <n>=2 is used to cancel an ongoing USSD session. If <n> is not given then the default value 0 is taken.

When <str> is given, a mobile initiated USSD string or a response USSD string to a network initiated operation is sent to the network. The response USSD string from the network is returned in a subsequent unsolicited +CUSD: result code.

The interaction of this command with other commands based on other GSM supplementary services is described in the GSM standard.

Test command returns values supported by the TA as a compound value.

Some different scenarios are shown below:

- An incoming network initiated USSD-Notify should be presented to the external application as an unsolicited result code +CUSD: if the external application has enabled result code presentation.
- An incoming USSD-request asking for a reply should sent to the external application as an unsolicited result code +CUSD: if the external application has enabled result code.
- If the external application answers to the request with the command AT+CUSD then the ME sends the answer to the network.
- A USSD-request sent with the command AT+CUSD from the external application.

The different alternatives are shown below.

	Network	*Mobile Equipment*	*External application*
1	Signal	Sends unsolicited result code +CUSD	Result code presentation enabled, presented
2	Signal asking for reply	Sends unsolicited result code +CUSD	Result code presentation enabled, presented
3			Answer AT+CUSD
3b			Sends AT+CUSD

<n>	*Description*
0	Disable result code presentation in the TA
1	Enable result code presentation in the TA
2	Terminate (abort) USSD dialogue. This value is not applicable to the read command response

<str>	*Description*
string	String type USSD (when <str> parameter is not given, network is not interrogated): -If <dcs> indicates that GSM 03.38 default alphabet is used: *if TE character set other than "HEX" (refer command Select TE Character Set +CSCS): ME/TA converts GSM alphabet into current TE character set according to rules of GSM 07.05 Annex A

Example 1

AT Command	*Result Code*	*Description*
AT+CUSD=1,"*34#"		Enable the Result Code presentation in the TAE and send a USSD-request
	+CUSD:1,"id code" OK	Further user action required, give id code
AT+CUSD=1,"7465338"		Id code given
	+CUSD:0 OK	No further user action required

Example 2

AT Command	*Result Code*	*Description*
	+CUSD:0,"Expensive incoming call"	Incoming USSD-notify telling the user that the incoming call is expensive

Example 3

AT Command	*Result Code*	*Description*
AT+CUSD=1,"*55*0700#"		Enable the Result Code presentation in the TAE and send a USSD-request asking for an alarm at the time 07:00
	+CUSD:0,"ALARM"	At 07:00 the network sends an alarm to the user

17. Alphabetical Listing of AT Commands

AT Command	*Description*	*Page No.*
AT	Attention Command	129
AT&C	Circuit 109 (DCD) Control	133
AT&D	Circuit 108 (DTR) Response	133
AT&F	Set to Factory Defined Configuration	129
AT&S	Circuit 107 (DSR) Response	134
AT&W	Store User Profile	129
AT*	List all Supported AT Commands	130
AT*E2APR	M2M Audio Profile Manipulation	95
AT*E2CD	Ericsson M2M Cell Description	143
AT*E2EAMS	Ericsson M2M Audio Profile Modification	89
AT*E2EMM	Ericsson M2M Engineering Monitoring Mode	145
AT*E2ESC	M2M Escape Sequence Guard Time	142
AT*E2FAX	Ericsson M2M Fax Comm. Baud Rate Modification	127
AT*E2NBTS	Ericsson M2M Neighbour BTS	165
AT*E2PBCS	Ericsson M2M Phonebook Check Sum	167
AT*E2SPN	M2M Service Provider Indication	151
AT*E2SSD	M2M Supplementary Service Dispatch	239
AT*E2SSI	M2M Supplementary Service Indications	240
AT*E2SSN	Ericsson M2M SIM Serial Number	154
AT*E2STKC	M2M STK Set Up Call	226
AT*E2STKD	M2M STK Display Text	216
AT*E2STKG	M2M STK Get Inkey	217
AT*E2STKI	M2M STK Get Input	219
AT*E2STKL	M2M STK Select Item	222
AT*E2STKM	M2M STK Set Up Menu	224
AT*E2STKN	M2M STK Envelope (Menu Selection)	226
AT*E2STKO	SIM Application Toolkit Settings	231
AT*E2STKS	SIM Application Toolkit Settings	215

AT Command	*Description*	*Page No.*
AT*EALR	Ericsson Audio Line Request	97
AT*EALS	Ericsson Request ALS Status	151
AT*EAMS	Ericsson Audio Mode Selection	98
AT*EARS	Ericsson Audio Ring Signal	99
AT*ECAM	Ericsson Call Monitoring	72
AT*ECPI	Ciphering Indicator	163
AT*ECSP	Ericsson Customer Service Profile	152
AT*EDIF	Ericsson Divert Function	237
AT*EDST	Ericsson Daylight Saving Time	73
AT*EGIR	Ericsson Group Item Read	132
AT*EIPS	Identity Presentation Set	238
AT*ELAM	Ericsson Local Audio Mode	100
AT*ELIN	Ericsson Line Set	239
AT*EMAR	Ericsson Master Reset	74
AT*EMIC	Ericsson Microphone Mode	100
AT*EMIR	Ericsson Music Mute Indication Request	101
AT*EPEE	Ericsson Pin Event	74
AT*EPNR	Ericsson Read SIM Preferred Network	153
AT*EPNW	Ericsson Write SIM Preferred Network	154
AT*ESAG	Ericsson Add to Group	167
AT*ESCG	Ericsson Create Group	168
AT*ESCN	Ericsson Set Credit Card Number	169
AT*ESDG	Ericsson Delete Group	171
AT*ESDI	Ericsson Delete Group Item	171
AT*ESGR	Ericsson Group Read	172
AT*ESLN	Ericsson Set Line Name	155
AT*ESNU	Ericsson Settings Number	173
AT*EXVC	Ericsson SET External Volume Control	101
AT+CACM	Accumulated Call Meter	233
AT+CAMM	Accumulated Call Meter Maximum	234
AT+CAOC	Advice of Charge	235
AT+CBST	Select Bearer Service Type	103
AT+CCFC	Call Forwarding Number and Conditions	245

AT Command	*Description*	*Page No.*
AT+CCLK	Set Clock and Date	75
AT+CCWA	Call Waiting	247
AT+CEER	Extended Error Report	75
AT+CFUN	Set Phone Functionality	76
AT+CGACT	PDP Context Activate or Deactivate	107
AT+CGATT	GPRS Attach or Detach	108
AT+CGDATA	Enter Data State	109
AT+CGDCONT	Define PDP Context	110
AT+CGEREP	GPRS Event Reporting	112
AT+CGMI	Read MS Manufacturer Identification	130
AT+CGMM	Read MS Model Identification	130
AT+CGMR	Read MS Revision Identification	131
AT+CGPADDR	Show PDP Address	113
AT+CGQMIN	Quality of Service Profile (Minimum Acceptable)	114
AT+CGQREQ	Quality of Service Profile (Requested)	116
AT+CGREG	GPRS Network Registration Status	119
AT+CGSMS	Select Service for MO SMS Messages	120
AT+CGSN	Read MS Product Serial Number Identification	131
AT+CHLD	Call Hold and Multiparty	249
AT+CHSC	HSCSD Current Call Parameters	121
AT+CHSD	HSCSD Device Parameters	122
AT+CHSN	HSCSD Non Transparent Call Configuration	123
AT+CHSR	HSCSD Parameters Report	124
AT+CHSU	HSCSD Automatic User Initiated Upgrading	125
AT+CHUP	Hang Up Call	63
AT+CIMI	Subscriber Identification	156
AT+CIND	Indicator Control	77
AT+CLAC	List All Available AT Commands	78
AT+CLCK	Facility Lock	156
AT+CLIP	Calling Line Identification	250
AT+CLIR	Calling Line Identification Restriction	251
AT+CMEE	Mobile Equipment Error	78
AT+CMER	Mobile Equipment Event Reporting	79

AT Command	*Description*	*Page No.*
AT+CMGC	Send Command	189
AT+CMGD	Delete Message	207
AT+CMGF	Message Format	182
AT+CMGL	List Message	201
AT+CMGR	Read Message	196
AT+CMGS	Send Message	185
AT+CMGW	Write Message to Memory	182
AT+CMOD	Call Mode	64
AT+CMSS	Send From Storage	188
AT+CMUX	Switch to 07.10 Multiplex Protocol	137
AT+CNMI	New Message Indications to TE	192
AT+CNUM	Subscriber Number	158
AT+COLP	Connected Line Identification Presentation	159
AT+COPS	Operator Selection	161
AT+CPAS	Phone Activity Status	80
AT+CPBF	Phonebook Find	174
AT+CPBR	Phonebook Read	174
AT+CPBS	Phone Storage	176
AT+CPBW	Phonebook Write	177
AT+CPIN	PIN Control	81
AT+CPMS	Preferred Message Storage	179
AT+CPUC	Price Per Unit and Currency Table	236
AT+CPWD	Change Password	83
AT+CR	Service Reporting Control	85
AT+CRC	Cellular Result Code	85
AT+CREG	Network Registration	162
AT+CRES	Restore SMS Settings	139
AT+CRLP	Radio Link Protocol	105
AT+CSAS	Save Settings	86
AT+CSCA	Service Centre Address	181
AT+CSCB	Select Cell Broadcast Message Type	213
AT+CSCS	Select Character Set	209
AT+CSDH	Show Text Mode Parameters	207

AT Command	*Description*	*Page No.*
AT+CSMP	Set Text Mode Parameters	208
AT+CSMS	Select Message Service	210
AT+CSQ	Signal Strength	87
AT+CSSN	Supplementary Service Notification	253
AT+CTZU	Automatic Time Zone Update	88
AT+CUSD	Unstructured Supplementary Service Data	255
AT+CVHU	Voice Hang-Up	65
"AT+F____"	Low Level Fax Commands	128
AT+GCAP	Request Modem Capabilities List	172
AT+ICF	Cable Interface Character Format	139
AT+IFC	DTE-DCE Local Flow Control	140
AT+ILRR	Cable Interface Local Rate Reporting	141
AT+IPR	Cable Interface Port Command	141
AT+VTS	DTMF and Tone Generation	65
AT+WS46	Mode Selection	134
ATA	Answer	59
ATD	Dial	60
ATE	Command Echo	135
ATH	Hang up	62
ATI	Identification Information	131
ATO	Return to Online Data Mode	62
ATP	Select Pulse Dialling	62
ATQ	Result Code Suppression	67
ATS0	Automatic Answer Control	67
ATS10	Automatic Disconnect Delay Control	72
ATS2	Escape Sequence Character	68
ATS3	Command Line Termination Character	68
ATS4	Response Formatting Character	69
ATS5	Command Line Editing Character (BACKSPACE)	70
ATS6	Blind Dial Delay Control	70
ATS7	Connection Completion Timeout	70
ATS8	Comma Dial Modifier Delay Control	70

AT Command	*Description*	*Page No.*
ATT	Select Tone Dialling	62
ATV	DCE Response Format	135
ATX	Call Progress Monitoring Control	63
ATZ	Reset to Default Configuration	136

Unsolicited Result Code	*Description*	*Page No.*
*E2STKE	STK Send Short Message	228
*E2STKP	STK Send SS	229
*E2STKR	STK Refresh	231
*E2STKU	STK Send USSD	230