Sony Ericsson

Company Internal
REPORT

Prepared (also subject responsible if other)		No.		
LD/SEMC/BGGI/NM *Ramadan Plicanic*		*BGGIN06:499*		
Approved	Checked	Date	Rev	Reference
LD/SEMC/BGGI/NMC *Peter Lindeborg*	*061114*	*061114*	A	File

Report issued by Accredited SAR Laboratory

for

PY7A1022044 (W200)

Date of test: *6 and 7 November, 2006*

Laboratory: Sony Ericsson SAR Test Laboratory
Sonyericsson Mobile Communications AB
Nya Vattentornet
SE-221 82 LUND, Sweden

Testing Engineer: *Ramadan Plicanic*
Ramadan.Plicanic@sonyericsson.com
+46 46 19 38 62

Testing Approval *Peter Lindeborg*
Peter.Lindeborg@sonyericsson.com
+46 46 212 61 80

Statement of Compliance
Sony Ericsson Mobile Communications AB declares under its sole responsibility that the product

Sony EricssonType : AAB-1022044-BV; FCC ID : PY7A1022044; IC:4170B-A1022044

to which this declaration relates, is in conformity with the appropriate RF exposure standards recommendations and guidelines. It also declares that the product was tested in accordance with the appropriate measurement standards, guidelines and recommended practices. Any deviations from these standards, guidelines and recommended practices are noted below:
(None)

This laboratory is accredited to ISO/IEC 17025 (SWEDAC accreditation no. 1847).

Laboratories are accredited by the Swedish Board for Accreditation and Conformity Assessment (SWEDAC) under the terms of Swedish legislation. The accredited laboratory activities meet the requirements in SS-EN ISO/IEC 17025 (2000). This report may not be reproduced other than in full, except with the prior written approval of the issuing laboratory.
The results and statements contained herein relate only to the items tested. The names of individuals involved may be mentioned only in connection with the statements or results from this report.

Sony Ericsson encourages all feedback, both positive and negative, on this report.
© Sony Ericsson Mobile Communication AB, 2006

Sony Ericsson

Company Internal
REPORT

Prepared (also subject responsible if other)		No.		
LD/SEMC/BGGI/NM *Ramadan Plicanic*		BGGIN06:499		
Approved	Checked	Date	Rev	Reference
LD/SEMC/BGGI/NMC Peter Lindeborg	*061114*	*061114*	A	File

1 Table of contents

2 INTRODUCTION 3

3 DEVICE UNDER TEST 3

3.1 ANTENNA DESCRIPTION 3
3.2 DEVICE DESCRIPTION 3

4 TEST EQUIPMENT 4

4.1 DOSIMETRIC SYSTEM 4
4.2 ADDITIONAL EQUIPMENT 4

5 ELECTRICAL PARAMETERS ON THE TISSUE SIMULATING LIQUID 5

6 SYSTEM ACCURACY VERIFICATION 5

7 SAR MEASUREMENT UNCERTAINTY 6

8 TEST RESULTS 7

9 REFERENCES 8

10 APPENDIX 9

10.1 PHOTOGRAPHS OF THE DEVICE UNDER TEST 10
10.2 DEVICE POSITION ON SAM TWINS PHANTOM 11

2 Introduction

In this test report, compliance of the Sony Ericsson PY7A1022044 portable telephone with RF safety guidelines is demonstrated. The applicable RF safety guidelines and the SAR measurement specifications used for the test are described in the *SAR Measurement Specifications of Wireless Handsets* [1].

3 Device Under Test

3.1 Antenna Description

Type	Build in	
Location	Up on the back side	
Dimensions	Max length	32mm
	Max width	30mm
Configuration	PIFA	

3.2 Device description

Device model	PY7A1022044 (W200)					
Serial number	BDX0000TUY (#5988)					
Mode	GSM1900					
Multiple Access Scheme	TDMA			TDMA, GPRS 2slots		
Output Power Setting (dBm)	fl 30.5	fm 30.4	fh 30.4	fl 30.5	fm 30.4	fh 30.4
Factory Tolerance in Power Setting	±0.5 dB			±0.5 dB		
Maximum Peak Output Power	30.5dBm			30.5dBm		
Crest Factor	8.3			4.15		
Transmitting Frequency Range(MHz)	1850.2 – 1909.8					
Prototype or Production Unit	Preproduction HW EP2.5					
Device Category	Portable					
RF exposure environment	General population / uncontrolled					

4 Test equipment

4.1 Dosimetric system

SAR measurements were made using the DASY4 professional system (software version 4.6, Built 23.7) with SAM twin phantom, manufactured by Schmid & Partner Engineering AG (SPEAG). The list of calibrated equipment is given below.

Description	***Serial Number***	***Due Date***
DASY DAE V1	640	012007
E-field probe ET3DV6	1815	012007
Dipole Validation Kit, D1900V2	5d073	052008

4.2 Additional equipment

Description	***Inventory Number***	***Due Date***
Signal generator ESG-D4000A	INV 462935	032007
Directional coupler HP778D	INV 2903	032007
Power meter R&S NRVD	INV 20007668	122007
Power sensor R&S NRV-Z5	INV 20007670	122007
Power sensor R&S NRV-Z5	INV 20007671	122007
Termination 65N50-0-11	INV 2903	032007
Network analyzer HP8753C	INV421671	032007
S-parameter test set HP85047A	INV 421670	032007
Dielectric probe kit HP85070D	INV 20000053	Self cal

5 Electrical parameters on the tissue simulating liquid

Prior to conducting SAR measurements, the relative permittivity, ε_r, and the conductivity, σ, of the tissue simulating liquids were measured with the dielectric probe kit. These values are shown in the table below. The mass density, ρ, entered into the DASY4 software is also given. Recommended limits for permittivity ε_r, conductivity σ and mass density ρ are also shown.

f (MHz)	Tissue type	Limits / Measured	Dielectric Parameters		
			ε_r	σ (S/m)	ρ (g/cm³)
1900	Head	Measured,6/Nov/2006	39.2	1.47	1.00
		Recommended	40.0	1.40	1.00
1900	Body	Measured, 7/Nov/2006	51.4	1.55	1.00
		Recommended	53.3	1.52	1.00

6 System accuracy verification

A system accuracy verification of the DASY4 was performed using the dipole validation kit listed in section 3.1. The system verification test was conducted on the same day as the measurement of the DUT. Measurement made in ambient temperature 22.7-23.0 °C and humidity 43.3-38.4%. The obtained results are displayed in the table below.

RF noise had been measured in liquid when all RF equipment in lab was set off. Measured value was 0.000009mW/g in 1g mass.

f (MHz)	Liquid	Measured / Reference	SAR (W/kg) 1g/10g	Dielectric Parameters			Liquid t(°C)
				ε_r	σ (S/m)	ρ (g/cm³)	
1900	Head	Measured, 6/Nov/2006	38.8/20.3	39.2	1.47	1.00	22.7
		Reference	38.7/20.4	39.4	1.41	1.00	22.8
1900	Body	Measured, 7/Nov/2006	38.9/20.7	51.4	1.55	1.00	22.2
		Reference	41.6/22.0	51.6	1.58	1.00	22.7

7 SAR measurement uncertainty

DASY4 SAR measurement uncertainty evaluation for Sony Ericsson PY7A1022044 phone According to IEEE 1528

Uncertainty Component	Uncer. (%)	Prob Dist.	Div.	C_i	GSM 1900-Head	GSM 1900-Body
Measurement System						
Probe Calibration	±5.9	N	1	1	±5.9	±5.9
Axial Isotropy	±4.7	R	√3	0.7	±1.9	±1.9
Spherical Isotropy	±9.6	R	√3	0.7	±3.9	±3.9
Boundary Effect	±1.0	R	√3	1	±1.0	±1.0
Linearity	±4.7	R	√3	1	±2.7	±2.7
System Detection Limits	±1.0	R	√3	1	±0.6	±0.6
Readout electronics	±0.3	N	1	1	±0.3	±0.3
Response time	±0.8	R	√3	1	±0.5	±0.5
Integration time	±2.6	R	√3	1	±1.5	±1.5
RF Ambient Conditions	±3.0	R	√3	1	±1.7	±1.7
Probe Positioner	±0.4	R	√3	1	±0.2	±0.2
Probe Positioning	±2.9	R	√3	1	±1.7	±1.7
Max. SAR Evaluation	±1.0	R	√3	1	±0.6	±0.6
Measurement System Uncertainty					*±8.4*	*±8.4*
Test Sample Related						
Device positioning	±2.9	N	1	1	±2.9	±2.9
Device holder uncertainty	±3.6	N	1	1	±3.6	±3.6
Power drift	-1.8/-1.4	R	√3	1	-1.0	-0.8
Test Sample Related Uncertainty					*±4.7*	*±4.7*
Phantom and Tissue Parameters						
Phantom uncertainty	±4.0	R	√3	1	±2.3	±2.3
Liquid conductivity (meas)	±2.5	N	1	0.64	±1.6	±1.6
Liquid conductivity (target)	+5.0/+2.0	R	√3	0.64	+1.9	0.7
Liquid Permittivity (meas)	±2.5	N	1	0.6	±1.5	±1.5
Liquid Permittivity (target)	-2.0/-3.6	R	√3	0.6	-0.7	-1.2
Phantom and Tissue Parameters Uncertainty					*±3.8*	*±3.5*
Combined standard uncertainty					*±10.3*	*±10.2*
Extended standard uncertainty (k=2)					***±20.6***	***±20.4***

8 Test results

The measured 1-gram averaged SAR values of the device against head and body are provided in Table 1 and Table 2. The ambient humidity and temperature of test facility were (43.3-38.4)) % and (22.7–23.0) °C respectively.

The depth of the head and body tissue simulating liquids were 15.9cm and 15.6cm. A base station simulator was used to control the device during the SAR measurements. The phone was supplied with full-charged battery for each measurement.

For head measurement, the device was tested on the right-hand phantom (corresponding to the right side of the head) and the left-hand phantom in two different phones position, cheek (touch) and tilt (cheek + 15deg). For all modes, the device was tested at the lowest, middle and highest frequencies in the transmit band.

For body measurements the phone was tested in speech and data mode when the phone's antenna (Back) was against the flat section of the phantom with 15mm distance. For worst case phone was tested with front against the flat section. For speech mode it's used Sony Ericsson portable hands free HPB-60.

Mode	Channel	Power (dB)	Phone Position	Liquid t (°C)	SAR (W/kg)	
					Right-hand	Left-hand
					1g mass	1g mass
1900 GSM	512	30.5	Cheek	22.7	0.21	0.16
			Tilt	22.7	0.20	0.17
	661	30.4	Cheek	22.7	0.24	0.18
			Tilt	22.7	0.26	0.21
	810	30.4	Cheek	22.7	0.24	0.18
			Tilt	22.7	**0.26**	0.21

Table1: SAR measurement result for Sony Ericsson PY7A1022044 telephone at highest possible output power. Measured against the head.

Mode	Channel	Power (dBm)	Phone Position	Liquid t (°C)	SAR (W/kg) in 1 g mass
1900 GSM	512	30.5	Antenna to phantom, speech, HPB60	22.2	0.24
			Antenna to phantom, data, GPRS 2Sl	22.2	0.37
	661	30.4	Antenna to phantom, speech, HPB60	22.2	0.26
			Antenna to phantom, data, GPRS 2Sl	22.2	0.44
	810	30.4	Antenna to phantom, speech, HPB60	22.2	0.26
			Front to phantom, data, GPRS 2Sl	22.2	0.14
			Antenna to phantom, data, GPRS 2Sl	22.2	**0.47**

Table2: SAR measurement result for Sony Ericsson PY7A1022044 telephone at highest possible output power. Measured against the body.

9 References

[1] R.Plicanic, “SAR Measurement Specification of Wireless Handsets”, Sony Ericsson SAR Test Laboratory internal document GUG/N 03:141

[2] Basic standard for the Measurement of Specific Absorption Rate related to human exposure to electromagnetic fields from mobile phones (300MHz-3GHz), European Standard EN 50361, July 2001

[3] FCC, “Evaluating Compliance with FCC Guidelines for Human Exposure to Radio Frequency Electromagnetic Fields: Additional Information for Evaluating Compliance of Mobile and Portable Devices with FCC Limits for Human Exposure to Radio Frequency Emissions,” Supplement C (Edition 01-01) to OET Bulletin 65 (Edition 97- 01).

[4] IEEE, “Recommended Practice for Determining the Peak Spatial-Average Specific Absorption Rate (SAR) in the Human Body Due to Wireless Communications Devices: Experimental Techniques,” Std 1528-2003, June, 2003.

Calibration Laboratory of
Schmid & Partner
Engineering AG
Zeughausstrasse 43, 8004 Zurich, Switzerland

S Schweizerischer Kalibrierdienst
C Service suisse d'étalonnage
Servizio svizzero di taratura
S Swiss Calibration Service

Accredited by the Swiss Federal Office of Metrology and Accreditation
The Swiss Accreditation Service is one of the signatories to the EA Multilateral Agreement for the recognition of calibration certificates

Accreditation No.: SCS 108

Client Sony Ericsson Lund

Certificate No: D1900V2-5d002_Mar05

CALIBRATION CERTIFICATE

Object	D1900V2 - SN: 5d002
Calibration procedure(s)	QA CAL-05.v6 Calibration procedure for dipole validation kits
Calibration date:	March 15, 2005
Condition of the calibrated item	In Tolerance

This calibration certificate documents the traceability to national standards, which realize the physical units of measurements (SI).
The measurements and the uncertainties with confidence probability are given on the following pages and are part of the certificate.

All calibrations have been conducted in the closed laboratory facility: environment temperature (22 ± 3)°C and humidity < 70%.

Calibration Equipment used (M&TE critical for calibration)

Primary Standards	ID #	Cal Date (Calibrated by, Certificate No.)	Scheduled Calibration
Power meter EPM E442	GB37480704	12-Oct-04 (METAS, No. 251-00412)	Oct-05
Power sensor HP 8481A	US37292783	12-Oct-04 (METAS, No. 251-00412)	Oct-05
Reference 20 dB Attenuator	SN: 5086 (20g)	10-Aug-04 (METAS, No 251-00402)	Aug-05
Reference 10 dB Attenuator	SN: 5047.2 (10r)	10-Aug-04 (METAS, No 251-00402)	Aug-05
Reference Probe ET3DV6	SN 1507	26-Oct-04 (SPEAG, No. ET3-1507_Oct04)	Oct-05
DAE4	SN 601	07-Jan-05 (SPEAG, No. DAE4-601_Jan05)	Jan-06

Secondary Standards	ID #	Check Date (in house)	Scheduled Check
Power sensor HP 8481A	MY41092317	18-Oct-02 (SPEAG, in house check Oct-03)	In house check: Oct-05
RF generator R&S SML-03	100698	27-Mar-02 (SPEAG, in house check Dec-03)	In house check: Dec-05
Network Analyzer HP 8753E	US37390585 S4206	18-Oct-01 (SPEAG, in house check Nov-04)	In house check: Nov 05

	Name	Function	Signature
Calibrated by:	Judith Müller	Laboratory Technician	
Approved by:	Katja Pokovic	Technical Manager	

Issued: March 16, 2005

This calibration certificate shall not be reproduced except in full without written approval of the laboratory.

Glossary:

TSL	tissue simulating liquid
ConvF	sensitivity in TSL / NORM x,y,z
N/A	not applicable or not measured

Calibration is Performed According to the Following Standards:

a) IEEE Std 1528-2003, "IEEE Recommended Practice for Determining the Peak Spatial-Averaged Specific Absorption Rate (SAR) in the Human Head from Wireless Communications Devices: Measurement Techniques", December 2003
b) CENELEC EN 50361, "Basic standard for the measurement of Specific Absorption Rate related to human exposure to electromagnetic fields from mobile phones (300 MHz - 3 GHz), July 2001
c) Federal Communications Commission Office of Engineering & Technology (FCC OET), "Evaluating Compliance with FCC Guidelines for Human Exposure to Radiofrequency Electromagnetic Fields; Additional Information for Evaluating Compliance of Mobile and Portable Devices with FCC Limits for Human Exposure to Radiofrequency Emissions", Supplement C (Edition 01-01) to Bulletin 65

Additional Documentation:

d) DASY4 System Handbook

Methods Applied and Interpretation of Parameters:

- *Measurement Conditions:* Further details are available from the Validation Report at the end of the certificate. All figures stated in the certificate are valid at the frequency indicated.
- *Antenna Parameters with TSL:* The dipole is mounted with the spacer to position its feed point exactly below the center marking of the flat phantom section, with the arms oriented parallel to the body axis.
- *Feed Point Impedance and Return Loss:* These parameters are measured with the dipole positioned under the liquid filled phantom. The impedance stated is transformed from the measurement at the SMA connector to the feed point. The Return Loss ensures low reflected power. No uncertainty required.
- *Electrical Delay:* One-way delay between the SMA connector and the antenna feed point. No uncertainty required.
- *SAR measured:* SAR measured at the stated antenna input power.
- *SAR normalized:* SAR as measured, normalized to an input power of 1 W at the antenna connector.
- *SAR for nominal TSL parameters:* The measured TSL parameters are used to calculate the nominal SAR result.

Measurement Conditions

DASY system configuration, as far as not given on page 1.

DASY Version	DASY4	V4.5
Extrapolation	Advanced Extrapolation	
Phantom	Modular Flat Phantom V5.0	
Distance Dipole Center - TSL	10 mm	with Spacer
Area Scan resolution	dx, dy = 15 mm	
Zoom Scan Resolution	dx, dy, dz = 5 mm	
Frequency	1900 MHz ± 1 MHz	

Head TSL parameters

The following parameters and calculations were applied.

	Temperature	**Permittivity**	**Conductivity**
Nominal Head TSL parameters	22.0 °C	40.0	1.40 mho/m
Measured Head TSL parameters	(22.0 ± 0.2) °C	39.6 ± 6 %	1.45 mho/m ± 6 %
Head TSL temperature during test	(21.5 ± 0.2) °C	----	----

SAR result with Head TSL

SAR averaged over 1 cm^3 (1 g) of Head TSL	condition	
SAR measured	250 mW input power	9.81 mW / g
SAR normalized	normalized to 1W	39.2 mW / g
SAR for nominal Head TSL parameters [1]	normalized to 1W	**38.3 mW / g ± 17.0 % (k=2)**

SAR averaged over 10 cm^3 (10 g) of Head TSL	Condition	
SAR measured	250 mW input power	5.15 mW / g
SAR normalized	normalized to 1W	20.6 mW / g
SAR for nominal Head TSL parameters [1]	normalized to 1W	**20.1 mW / g ± 16.5 % (k=2)**

[1] Correction to nominal TSL parameters according to d), chapter "SAR Sensitivities"

Body TSL parameters

The following parameters and calculations were applied.

	Temperature	Permittivity	Conductivity
Nominal Body TSL parameters	22.0 °C	53.3	1.52 mho/m
Measured Body TSL parameters	(22.0 ± 0.2) °C	51.6 ± 6 %	1.58 mho/m ± 6 %
Body TSL temperature during test	(22.0 ± 0.2) °C	----	----

SAR result with Body TSL

SAR averaged over 1 cm^3 (1 g) of Body TSL	condition	
SAR measured	250 mW input power	9.91 mW / g
SAR normalized	normalized to 1W	39.6 mW / g
SAR for nominal Body TSL parameters [2]	normalized to 1W	**37.9 mW / g ± 17.0 % (k=2)**

SAR averaged over 10 cm^3 (10 g) of Body TSL	condition	
SAR measured	250 mW input power	5.23 mW / g
SAR normalized	normalized to 1W	20.9 mW / g
SAR for nominal Body TSL parameters [2]	normalized to 1W	**20.0 mW / g ± 16.5 % (k=2)**

[2] Correction to nominal TSL parameters according to d), chapter "SAR Sensitivities"

Appendix

Antenna Parameters with Head TSL

Impedance, transformed to feed point	52.8 Ω + 2.0 jΩ
Return Loss	- 29.4 dB

Antenna Parameters with Body TSL

Impedance, transformed to feed point	48.5 Ω + 2.7 jΩ
Return Loss	- 30.0 dB

General Antenna Parameters and Design

Electrical Delay (one direction)	1.178 ns

After long term use with 100W radiated power, only a slight warming of the dipole near the feedpoint can be measured.

The dipole is made of standard semirigid coaxial cable. The center conductor of the feeding line is directly connected to the second arm of the dipole. The antenna is therefore short-circuited for DC-signals.
No excessive force must be applied to the dipole arms, because they might bend or the soldered connections near the feedpoint may be damaged.

Additional EUT Data

Manufactured by	SPEAG
Manufactured on	February 14, 2002

DASY4 Validation Report for Head TSL

Date/Time: 09.03.2005 15:20:45

Test Laboratory: SPEAG, Zurich, Switzerland

DUT: Dipole 1900 MHz; Type: D1900V2; Serial: D1900V2 - SN:5d002

Communication System: CW-1900; Frequency: 1900 MHz;Duty Cycle: 1:1
Medium: HSL 1900 MHz;
Medium parameters used: f = 1900 MHz; σ = 1.46 mho/m; ε_r = 39.5; ρ = 1000 kg/m^3
Phantom section: Flat Section
Measurement Standard: DASY4 (High Precision Assessment)

DASY4 Configuration:

- Probe: ET3DV6 - SN1507; ConvF(4.96, 4.96, 4.96); Calibrated: 26.10.2004
- Sensor-Surface: 4mm (Mechanical Surface Detection)
- Electronics: DAE4 Sn601; Calibrated: 07.01.2005
- Phantom: Flat Phantom 5.0; Type: QD000P50AA; Serial: 1001;
- Measurement SW: DASY4, V4.5 Build 19; Postprocessing SW: SEMCAD, V1.8 Build 146

Pin = 250 mW; d = 10 mm/Area Scan (81x81x1): Measurement grid: dx=15mm, dy=15mm
Maximum value of SAR (interpolated) = 11.4 mW/g

Pin = 250 mW; d = 10 mm/Zoom Scan (7x7x7)/Cube 0: Measurement grid: dx=5mm, dy=5mm, dz=5mm
Reference Value = 91.4 V/m; Power Drift = 0.037 dB
Peak SAR (extrapolated) = 16.9 W/kg
SAR(1 g) = 9.81 mW/g; SAR(10 g) = 5.15 mW/g
Maximum value of SAR (measured) = 11.0 mW/g

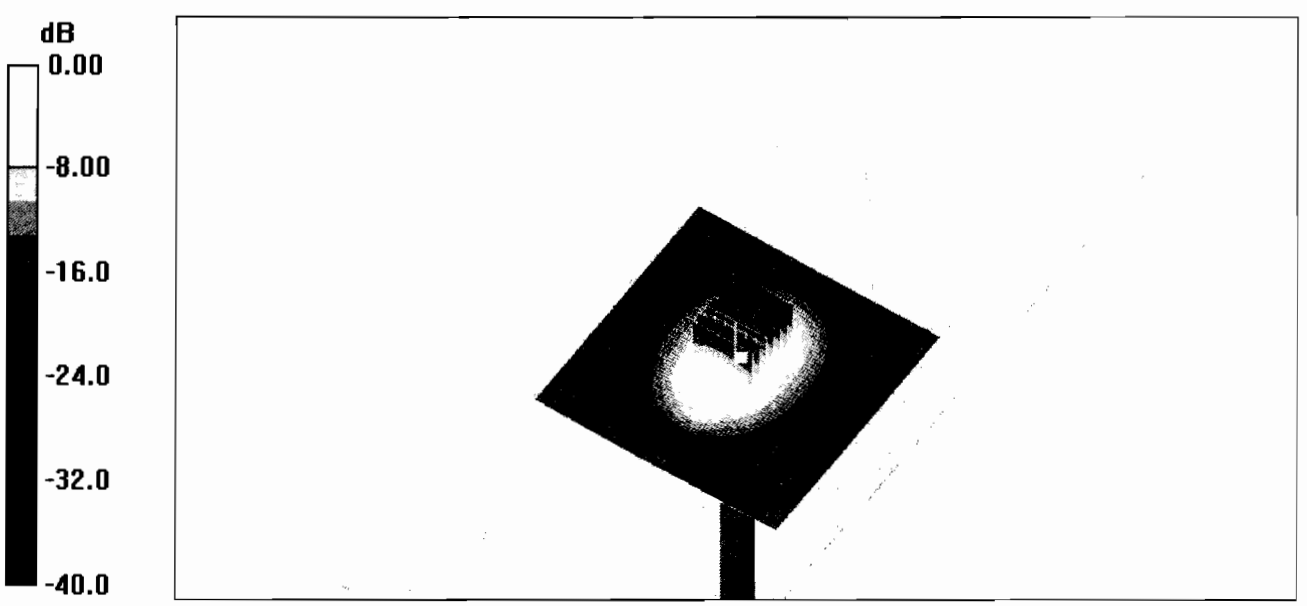

0 dB = 11.0mW/g

Impedance Measurement Plot for Head TSL

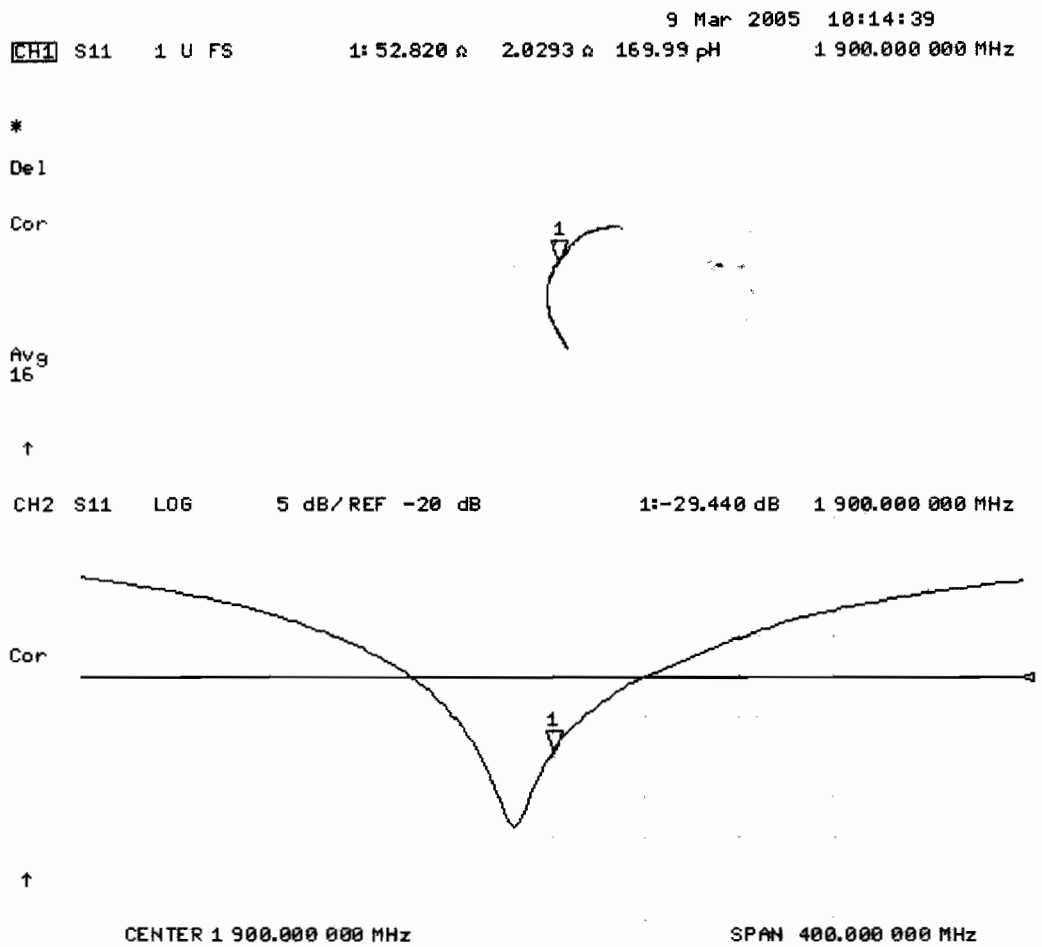

DASY4 Validation Report for Body TSL

Date/Time: 15.03.2005 15:20:32

Test Laboratory: SPEAG, Zurich, Switzerland

DUT: Dipole 1900 MHz; Type: D1900V2; Serial: D1900V2 - SN:5d002

Communication System: CW-1900; Frequency: 1900 MHz;Duty Cycle: 1:1
Medium: MSL 1900 MHz;
Medium parameters used: f = 1900 MHz; σ = 1.57 mho/m; ε_r = 52.2; ρ = 1000 kg/m^3
Phantom section: Flat Section
Measurement Standard: DASY4 (High Precision Assessment)

DASY4 Configuration:

- Probe: ET3DV6 - SN1507; ConvF(4.43, 4.43, 4.43); Calibrated: 26.10.2004
- Sensor-Surface: 4mm (Mechanical Surface Detection)
- Electronics: DAE4 Sn601; Calibrated: 07.01.2005
- Phantom: Flat Phantom 5.0; Type: QD000P50AA; Serial: 1001;
- Measurement SW: DASY4, V4.5 Build 19; Postprocessing SW: SEMCAD, V1.8 Build 146

Pin = 250 mW; d = 10 mm/Area Scan (81x81x1): Measurement grid: dx=15mm, dy=15mm
Maximum value of SAR (interpolated) = 11.4 mW/g

Pin = 250 mW; d = 10 mm/Zoom Scan (7x7x7)/Cube 0: Measurement grid: dx=5mm, dy=5mm, dz=5mm
Reference Value = 87.3 V/m; Power Drift = 0.061 dB
Peak SAR (extrapolated) = 16.8 W/kg
SAR(1 g) = 9.91 mW/g; SAR(10 g) = 5.23 mW/g
Maximum value of SAR (measured) = 11.3 mW/g

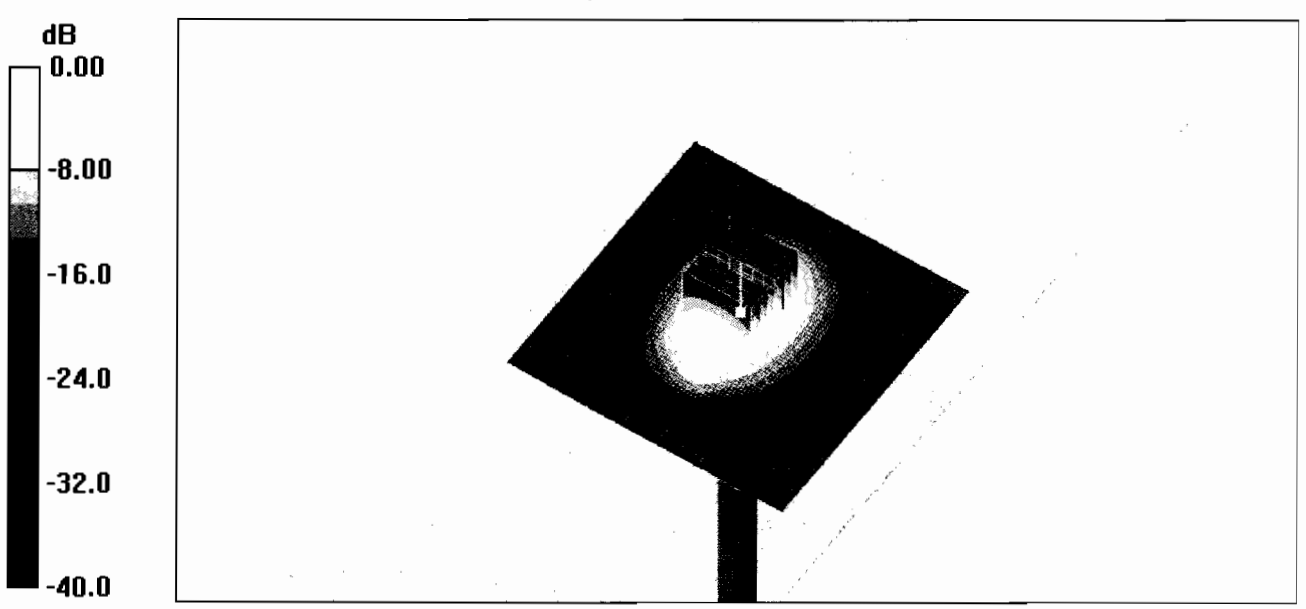

0 dB = 11.3mW/g

Impedance Measurement Plot for Body TSL

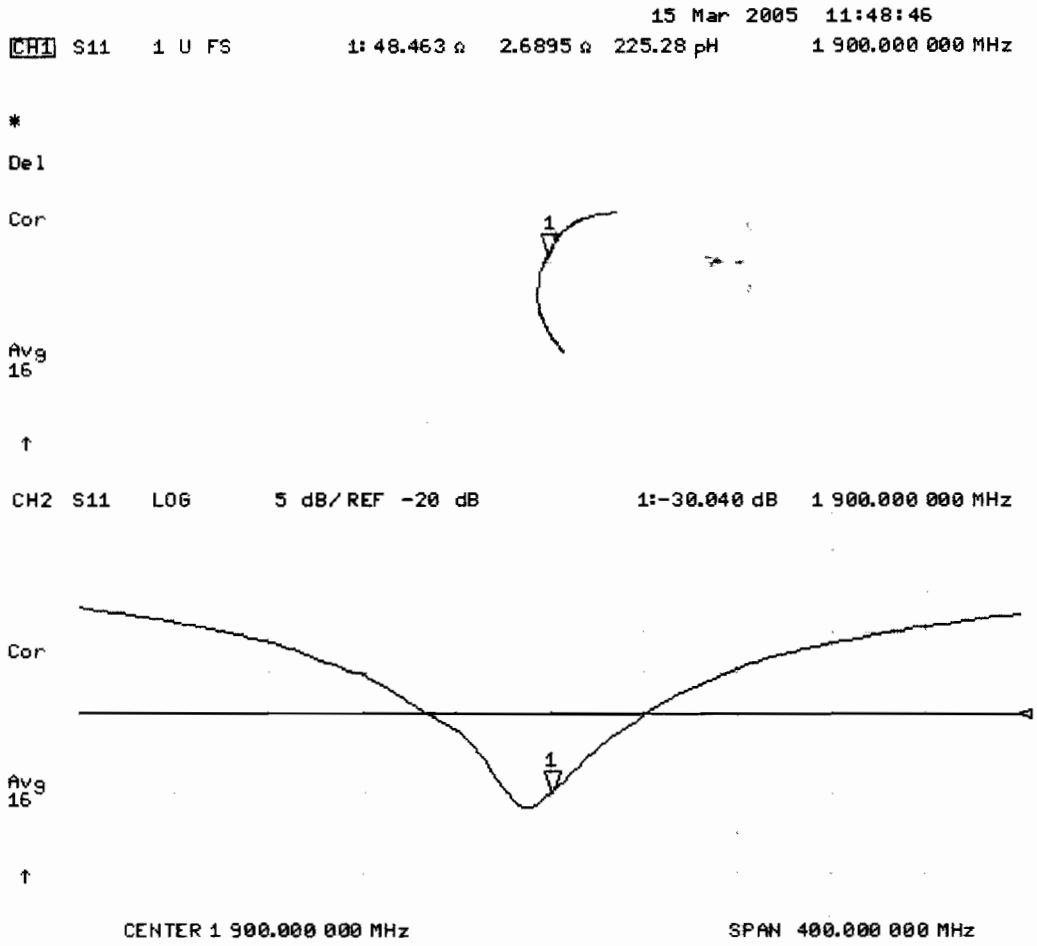

DASY4 Validation Report for Head TSL

Date/Time: 31.05.2006 11:49:47

Test Laboratory: SPEAG, Zurich, Switzerland

DUT: Dipole 1900 MHz; Type: D1900V2; Serial: D1900V2 - SN:5d073

Communication System: CW; Frequency: 1900 MHz;Duty Cycle: 1:1
Medium: HSL U10 BB;
Medium parameters used: f = 1900 MHz; σ = 1.41 mho/m; ε_r = 39.4; ρ = 1000 kg/m^3
Phantom section: Flat Section
Measurement Standard: DASY4 (High Precision Assessment)

DASY4 Configuration:

- Probe: ET3DV6 - SN1507 (HF); ConvF(4.74, 4.74, 4.74); Calibrated: 28.10.2005
- Sensor-Surface: 4mm (Mechanical Surface Detection)
- Electronics: DAE4 Sn601; Calibrated: 15.12.2005
- Phantom: Flat Phantom 4.9L; Type: QD000P49AA; ;
- Measurement SW: DASY4, V4.6 Build 23; Postprocessing SW: SEMCAD, V1.8 Build 161

Pin = 250 mW; d = 10 mm/Area Scan (71x71x1): Measurement grid: dx=15mm, dy=15mm
Maximum value of SAR (interpolated) = 11.6 mW/g

Pin = 250 mW; d = 10 mm/Zoom Scan (7x7x7)/Cube 0: Measurement grid: dx=5mm, dy=5mm, dz=5mm
Reference Value = 94.1 V/m; Power Drift = -0.023 dB
Peak SAR (extrapolated) = 16.6 W/kg
SAR(1 g) = 9.67 mW/g; SAR(10 g) = 5.11 mW/g
Maximum value of SAR (measured) = 10.9 mW/g

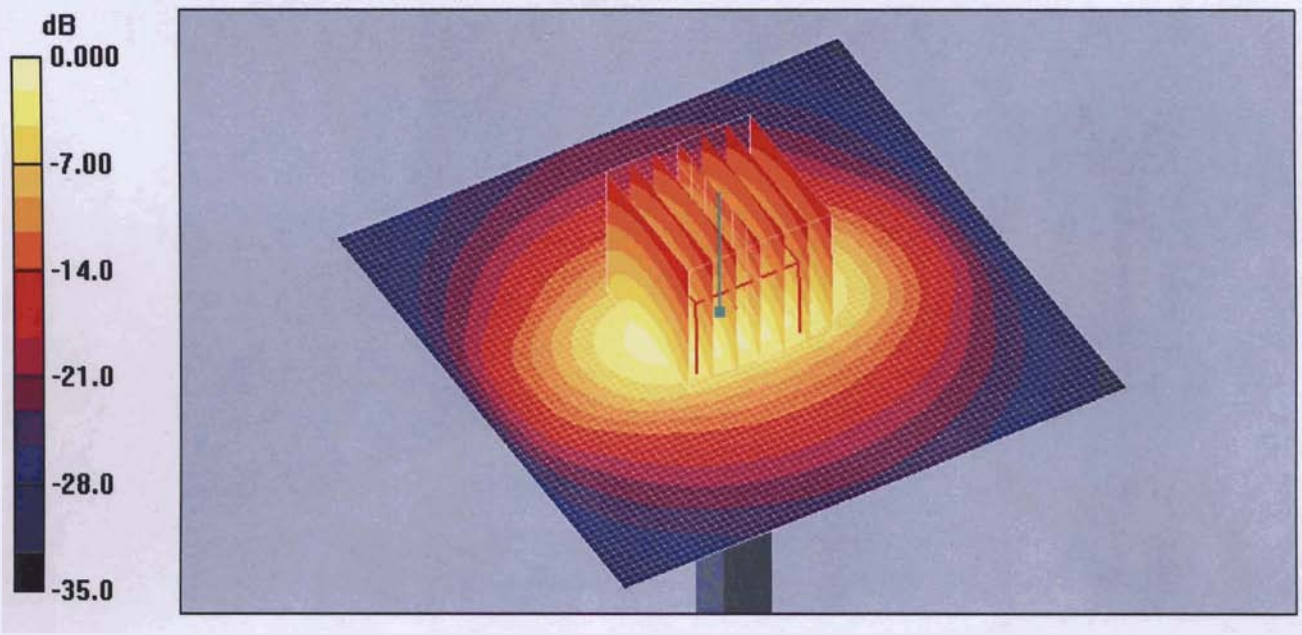

0 dB = 10.9mW/g

DASY4 Validation Report for Body TSL

Date/Time: 31.05.2006 14:35:04

Test Laboratory: SPEAG, Zurich, Switzerland

DUT: Dipole 1900 MHz; Type: D1900V2; Serial: D1900V2 - SN:5d073

Communication System: CW; Frequency: 1900 MHz;Duty Cycle: 1:1
Medium: MSL U10;
Medium parameters used: f = 1900 MHz; σ = 1.54 mho/m; ε_r = 54.6; ρ = 1000 kg/m^3
Phantom section: Flat Section
Measurement Standard: DASY4 (High Precision Assessment)

DASY4 Configuration:

- Probe: ET3DV6 - SN1507 (HF); ConvF(4.3, 4.3, 4.3); Calibrated: 28.10.2005
- Sensor-Surface: 4mm (Mechanical Surface Detection)
- Electronics: DAE4 Sn601; Calibrated: 15.12.2005
- Phantom: Flat Phantom 4.9L; Type: QD000P49AA; ;
- Measurement SW: DASY4, V4.6 Build 23; Postprocessing SW: SEMCAD, V1.8 Build 161

Pin = 250 mW; d = 10 mm/Area Scan (71x71x1): Measurement grid: dx=15mm, dy=15mm
Maximum value of SAR (interpolated) = 12.6 mW/g

Pin = 250 mW; d = 10 mm/Zoom Scan (7x7x7)/Cube 0: Measurement grid: dx=5mm, dy=5mm, dz=5mm
Reference Value = 93.4 V/m; Power Drift = -0.045 dB
Peak SAR (extrapolated) = 17.8 W/kg
SAR(1 g) = 10.4 mW/g; SAR(10 g) = 5.5 mW/g
Maximum value of SAR (measured) = 11.7 mW/g

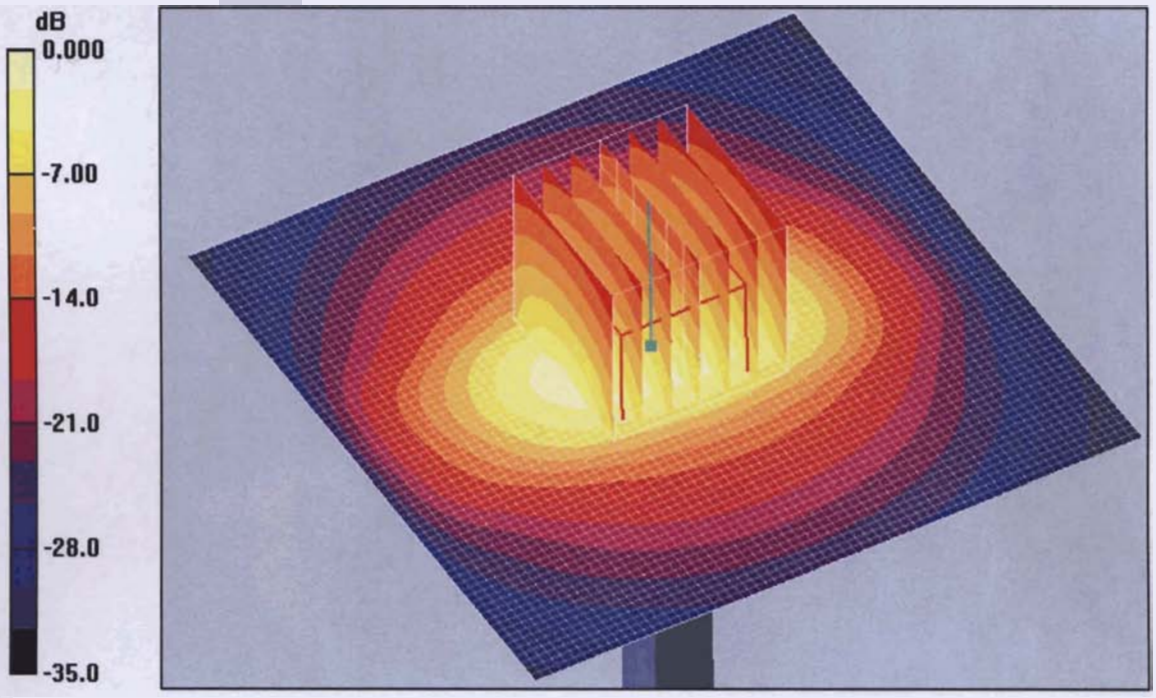

0 dB = 11.7mW/g

Date/Time: 2006-11-06 10:13:26

Test Laboratory: Sony Ericsson Mobile Communications
File Name: Verification_1900MHz_Head_061106_RP.da4

DUT: Dipole 1900 MHz; Type: D1900V2; Serial: D1900V2 - SN:5d073
Program Name: Verification Measurement on 1900MHz with HSL

Communication System: CW; Frequency: 1900 MHz;Duty Cycle: 1:1
Medium parameters used: f = 1900 MHz; σ = 1.47 mho/m; ε_r = 39.2; ρ = 1000 kg/m^3
Phantom section: Flat Section

DASY4 Configuration:
- Probe: ET3DV6 - SN1815; ConvF(5.23, 5.23, 5.23); Calibrated: 2006-01-20
- Sensor-Surface: 4mm (Mechanical Surface Detection)
- Electronics: DAE4 SN640; Calibrated: 2006-01-18
- Phantom: SAM 6; Type: SAM; Serial: 1351
- Measurement SW: DASY4, V4.6 Build 23; Postprocessing SW: SEMCAD, V1.8 Build 161

Flat, 10mm/Area Scan (61x61x1): Measurement grid: dx=10mm, dy=10mm
Maximum value of SAR (interpolated) = 4.47 mW/g

Flat, 10mm/Zoom Scan (5x5x7)/Cube 0: Measurement grid: dx=8mm, dy=8mm, dz=5mm
Reference Value = 57.6 V/m; Power Drift = -0.008 dB
Peak SAR (extrapolated) = 6.70 W/kg
SAR(1 g) = 3.88 mW/g; SAR(10 g) = 2.03 mW/g
Maximum value of SAR (measured) = 4.35 mW/g

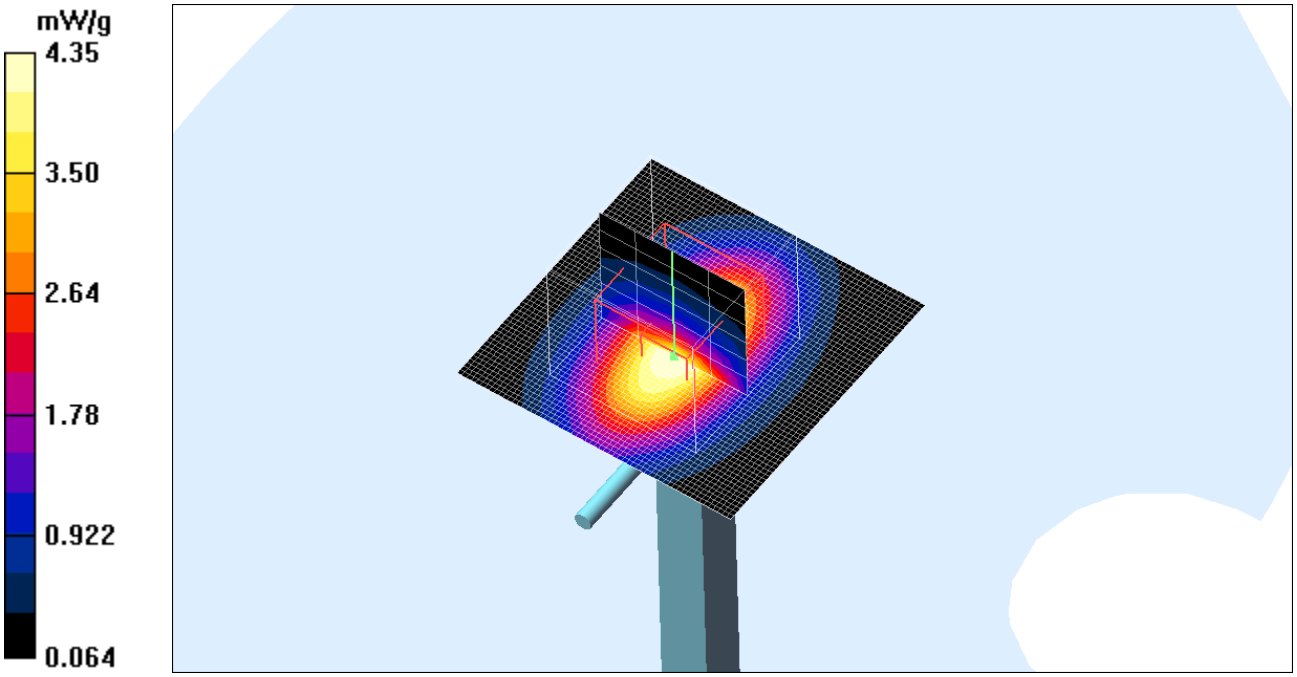

Date/Time: 2006-11-07 09:33:44

Test Laboratory: Sony Ericsson Mobile Communications
File Name: Verification_1900MHz_Body_061107_RP.da4

DUT: Dipole 1900 MHz; Type: D1900V2; Serial: D1900V2 - SN:5d073
Program Name: Verification Measurement on 1900MHz with BSL

Communication System: CW; Frequency: 1900 MHz;Duty Cycle: 1:1
Medium parameters used: f = 1900 MHz; σ = 1.55 mho/m; ε_r = 51.4; ρ = 1000 kg/m^3
Phantom section: Flat Section

DASY4 Configuration:
- Probe: ET3DV6 - SN1815; ConvF(4.6, 4.6, 4.6); Calibrated: 2006-01-20
- Sensor-Surface: 4mm (Mechanical Surface Detection)
- Electronics: DAE4 SN640; Calibrated: 2006-01-18
- Phantom: SAM 6; Type: SAM; Serial: 1351
- Measurement SW: DASY4, V4.6 Build 23; Postprocessing SW: SEMCAD, V1.8 Build 161

Flat, 10mm/Area Scan (61x61x1): Measurement grid: dx=10mm, dy=10mm
Maximum value of SAR (interpolated) = 4.59 mW/g

Flat, 10mm/Zoom Scan (5x5x7)/Cube 0: Measurement grid: dx=8mm, dy=8mm, dz=5mm
Reference Value = 57.2 V/m; Power Drift = -0.020 dB
Peak SAR (extrapolated) = 6.48 W/kg
SAR(1 g) = 3.89 mW/g; SAR(10 g) = 2.07 mW/g
Maximum value of SAR (measured) = 4.40 mW/g

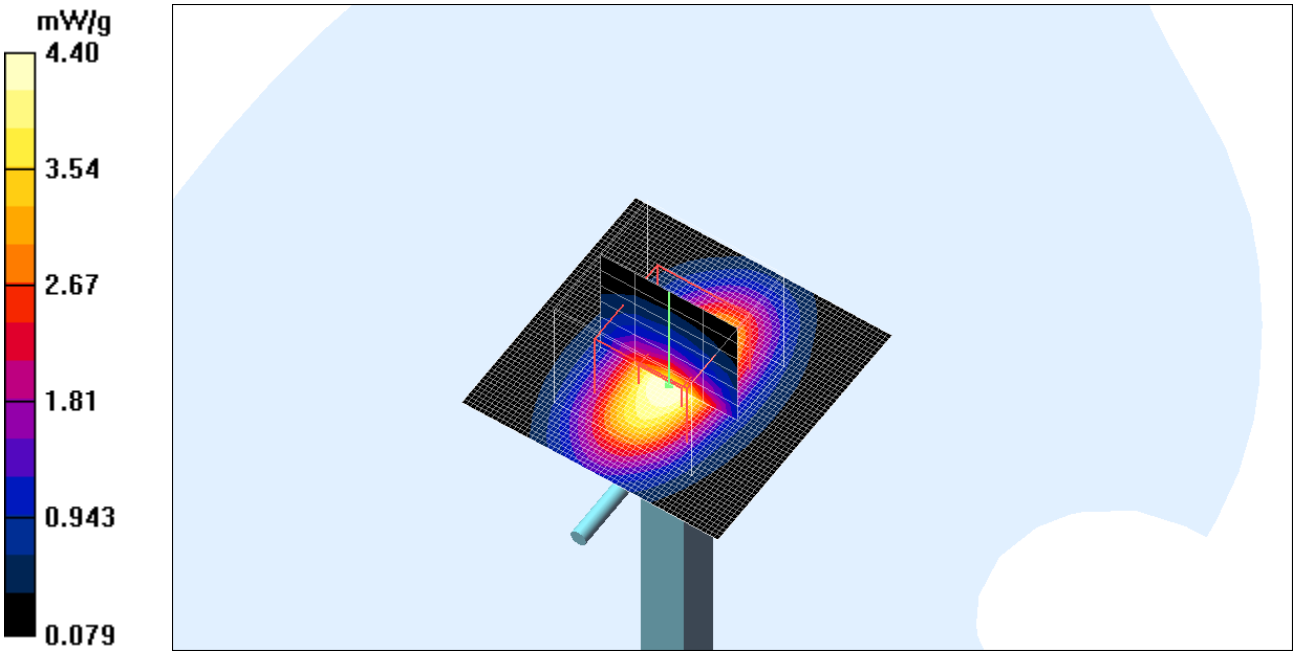

Date/Time: 2006-11-06 12:57:47

Test Laboratory: Sony Ericsson Mobile Communications
File Name: ch810_Right_Cheek_061106_RP.da4

DUT: PY7A1022044; Type: GSM900,1800,1900 ; Serial: #5988
Program Name: SAR Measurement on the Head

Communication System: GSM 1900; Frequency: 1909.8 MHz;Duty Cycle: 1:8.3
Medium parameters used: f = 1909.8 MHz; σ = 1.48 mho/m; ε_r = 39.1; ρ = 1000 kg/m^3
Phantom section: Right Section

DASY4 Configuration:
- Probe: ET3DV6 - SN1815; ConvF(5.23, 5.23, 5.23); Calibrated: 2006-01-20
- Sensor-Surface: 4mm (Mechanical Surface Detection)
- Electronics: DAE4 SN640; Calibrated: 2006-01-18
- Phantom: SAM 6; Type: SAM; Serial: 1351
- Measurement SW: DASY4, V4.6 Build 23; Postprocessing SW: SEMCAD, V1.8 Build 161

Right,Cheek/Area Scan (61x111x1): Measurement grid: dx=10mm, dy=10mm
Maximum value of SAR (interpolated) = 0.276 mW/g

Right,Cheek/Zoom Scan (5x5x7)/Cube 0: Measurement grid: dx=8mm, dy=8mm, dz=5mm
Reference Value = 10.8 V/m; Power Drift = 0.013 dB
Peak SAR (extrapolated) = 0.440 W/kg
SAR(1 g) = 0.244 mW/g; SAR(10 g) = 0.128 mW/g
Maximum value of SAR (measured) = 0.278 mW/g

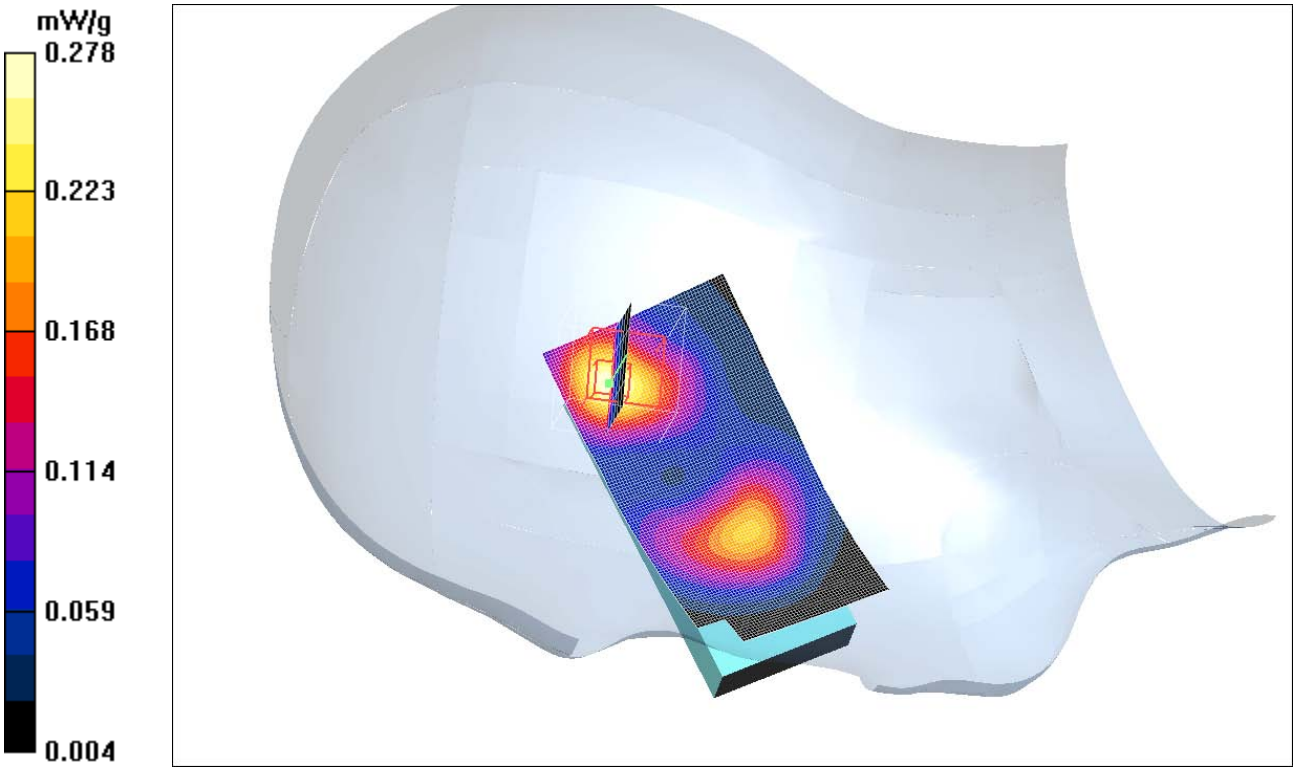

Date/Time: 2006-11-06 14:55:34

Test Laboratory: Sony Ericsson Mobile Communications
File Name: ch810_Left_Tilt_061106_RP.da4

DUT: PY7A1022044; Type: GSM900,1800,1900 ; Serial: #5988
Program Name: SAR Measurement on the Head

Communication System: GSM 1900; Frequency: 1909.8 MHz;Duty Cycle: 1:8.3
Medium parameters used: f = 1909.8 MHz; σ = 1.48 mho/m; ε_r = 39.1; ρ = 1000 kg/m^3
Phantom section: Left Section

DASY4 Configuration:
- Probe: ET3DV6 - SN1815; ConvF(5.23, 5.23, 5.23); Calibrated: 2006-01-20
- Sensor-Surface: 4mm (Mechanical Surface Detection)
- Electronics: DAE4 SN640; Calibrated: 2006-01-18
- Phantom: SAM 6; Type: SAM; Serial: 1351
- Measurement SW: DASY4, V4.6 Build 23; Postprocessing SW: SEMCAD, V1.8 Build 161

Left, Tilt/Area Scan (61x111x1): Measurement grid: dx=10mm, dy=10mm
Maximum value of SAR (interpolated) = 0.241 mW/g

Left, Tilt/Zoom Scan (5x5x7)/Cube 0: Measurement grid: dx=8mm, dy=8mm, dz=5mm
Reference Value = 12.3 V/m; Power Drift = -0.023 dB
Peak SAR (extrapolated) = 0.360 W/kg
SAR(1 g) = 0.210 mW/g; SAR(10 g) = 0.115 mW/g
Maximum value of SAR (measured) = 0.235 mW/g

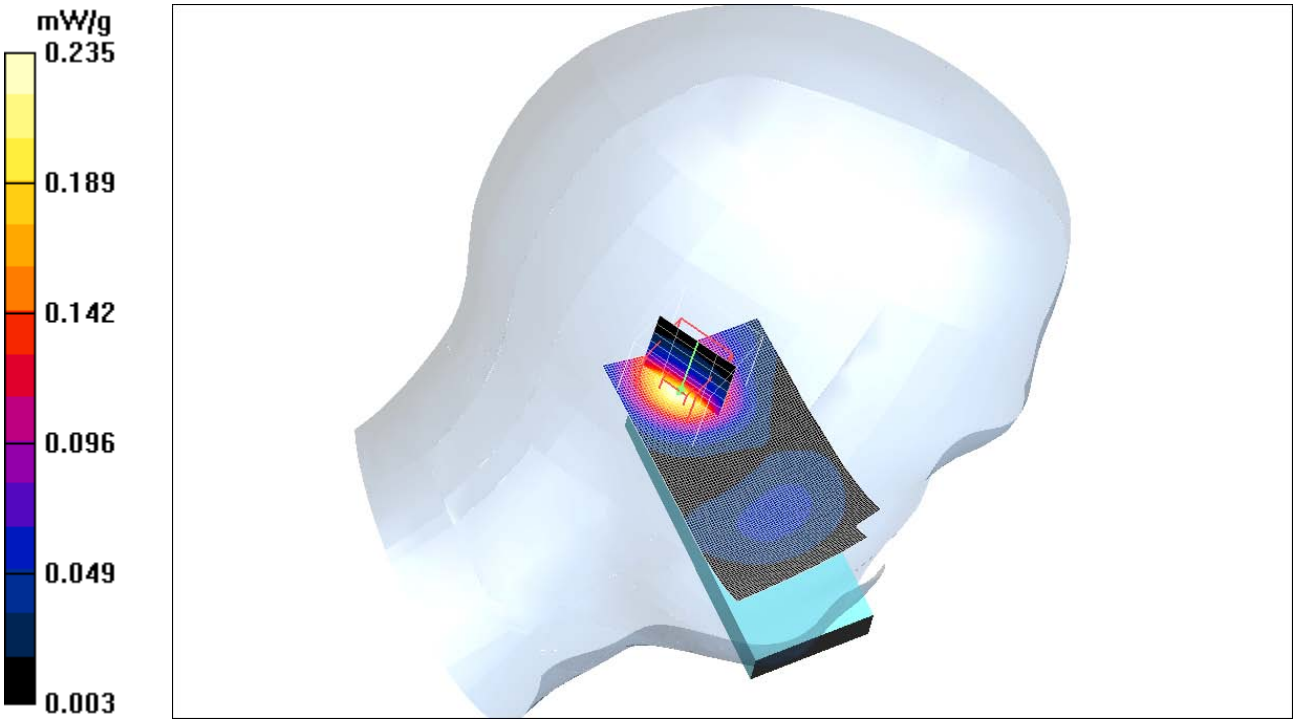

Date/Time: 2006-11-06 14:32:26

Test Laboratory: Sony Ericsson Mobile Communications
File Name: ch810_Left_Cheek_061106_RP.da4

DUT: PY7A1022044; Type: GSM900,1800,1900 ; Serial: #5988
Program Name: SAR Measurement on the Head

Communication System: GSM 1900; Frequency: 1909.8 MHz;Duty Cycle: 1:8.3
Medium parameters used: f = 1909.8 MHz; σ = 1.48 mho/m; ε_r = 39.1; ρ = 1000 kg/m^3
Phantom section: Left Section

DASY4 Configuration:
- Probe: ET3DV6 - SN1815; ConvF(5.23, 5.23, 5.23); Calibrated: 2006-01-20
- Sensor-Surface: 4mm (Mechanical Surface Detection)
- Electronics: DAE4 SN640; Calibrated: 2006-01-18
- Phantom: SAM 6; Type: SAM; Serial: 1351
- Measurement SW: DASY4, V4.6 Build 23; Postprocessing SW: SEMCAD, V1.8 Build 161

Left, Cheek/Area Scan (61x111x1): Measurement grid: dx=10mm, dy=10mm
Maximum value of SAR (interpolated) = 0.193 mW/g

Left, Cheek/Zoom Scan (5x5x7)/Cube 0: Measurement grid: dx=8mm, dy=8mm, dz=5mm
Reference Value = 10.9 V/m; Power Drift = -0.027 dB
Peak SAR (extrapolated) = 0.245 W/kg
SAR(1 g) = 0.175 mW/g; SAR(10 g) = 0.109 mW/g
Maximum value of SAR (measured) = 0.189 mW/g

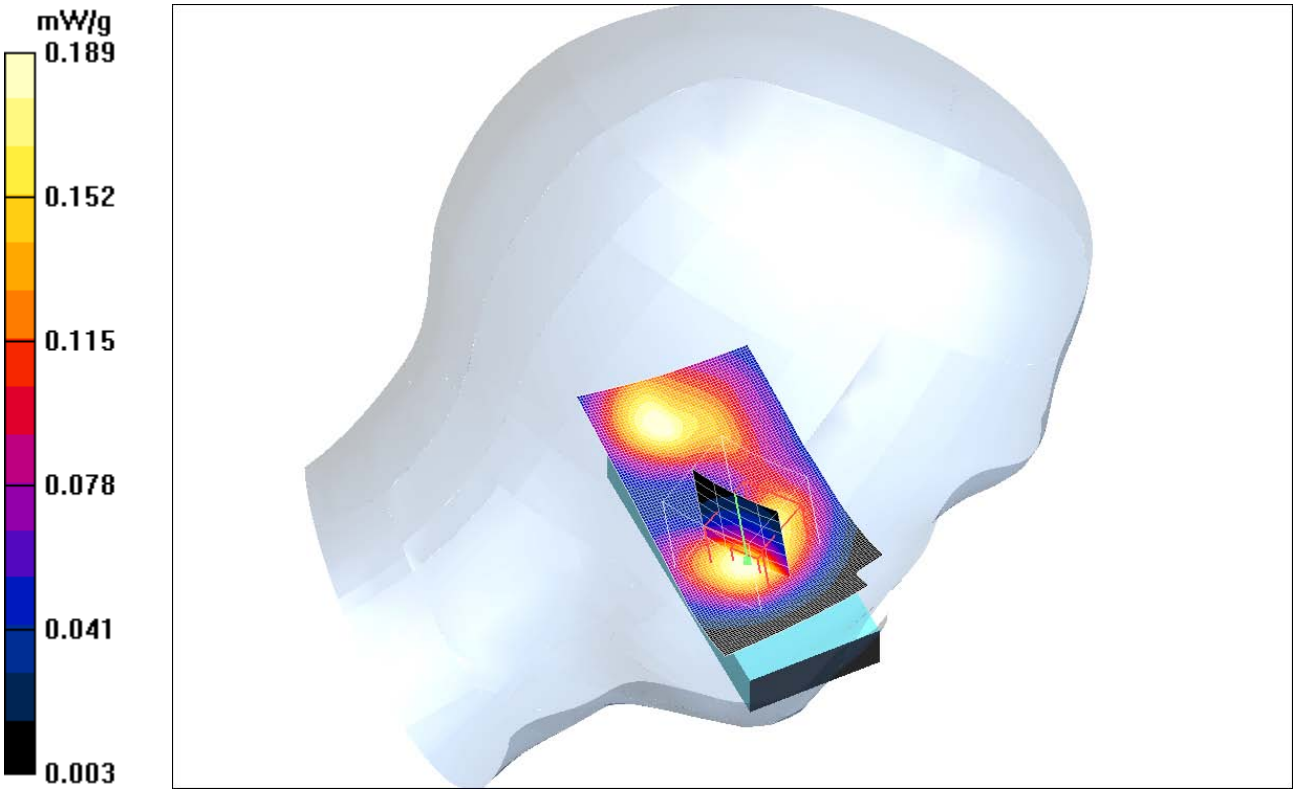

Date/Time: 2006-11-06 13:17:43

Test Laboratory: Sony Ericsson Mobile Communications
File Name: ch810_Right_Tilt_061106_RP.da4

DUT: PY7A1022044; Type: GSM900,1800,1900 ; Serial: #5988
Program Name: SAR Measurement on the Head

Communication System: GSM 1900; Frequency: 1909.8 MHz;Duty Cycle: 1:8.3
Medium parameters used: f = 1909.8 MHz; σ = 1.48 mho/m; ε_r = 39.1; ρ = 1000 kg/m^3
Phantom section: Right Section

DASY4 Configuration:
- Probe: ET3DV6 - SN1815; ConvF(5.23, 5.23, 5.23); Calibrated: 2006-01-20
- Sensor-Surface: 4mm (Mechanical Surface Detection)Sensor-Surface: 0mm (Fix Surface)
- Electronics: DAE4 SN640; Calibrated: 2006-01-18
- Phantom: SAM 6; Type: SAM; Serial: 1351
- Measurement SW: DASY4, V4.6 Build 23; Postprocessing SW: SEMCAD, V1.8 Build 161

Right,Tilt/Area Scan (61x111x1): Measurement grid: dx=10mm, dy=10mm
Maximum value of SAR (interpolated) = 0.293 mW/g

Right,Tilt/Zoom Scan (5x5x7)/Cube 0: Measurement grid: dx=8mm, dy=8mm, dz=5mm
Reference Value = 11.4 V/m; Power Drift = -0.061 dB
Peak SAR (extrapolated) = 0.463 W/kg
SAR(1 g) = 0.259 mW/g; SAR(10 g) = 0.134 mW/g
Maximum value of SAR (measured) = 0.294 mW/g

Right,Tilt/Z Scan (1x1x16): Measurement grid: dx=20mm, dy=20mm, dz=20mm
Maximum value of SAR (interpolated) = 0.066 mW/g

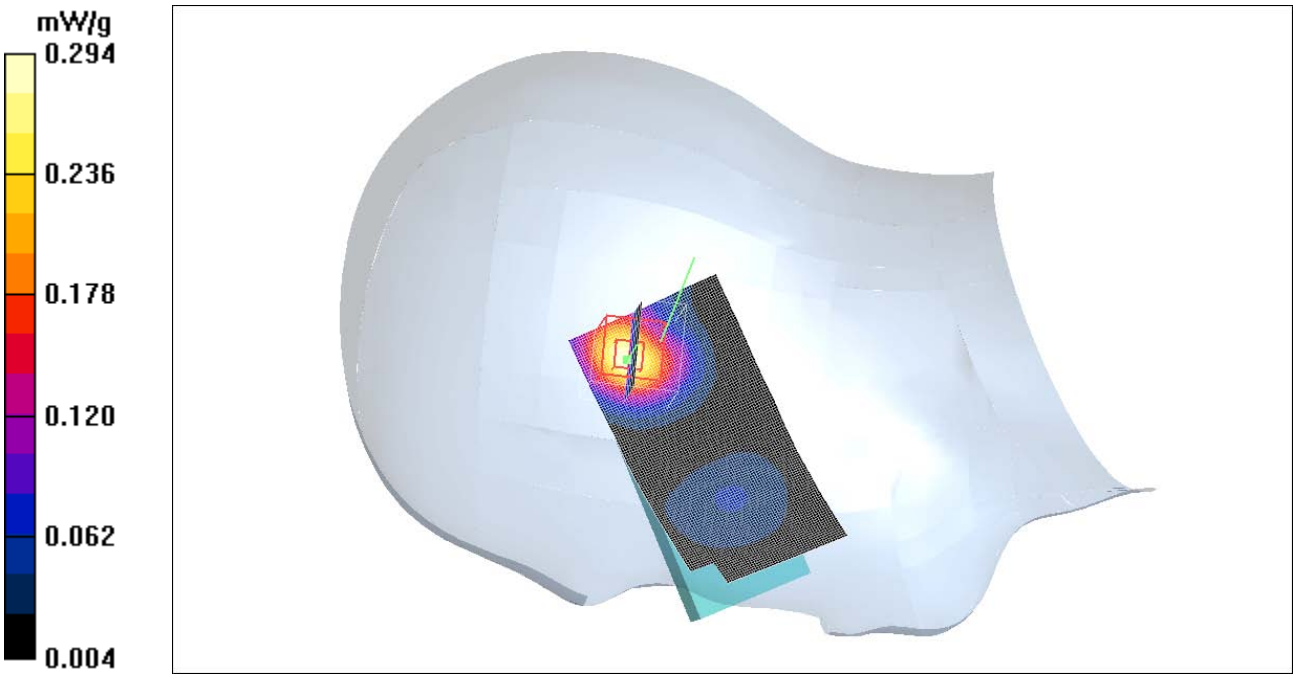

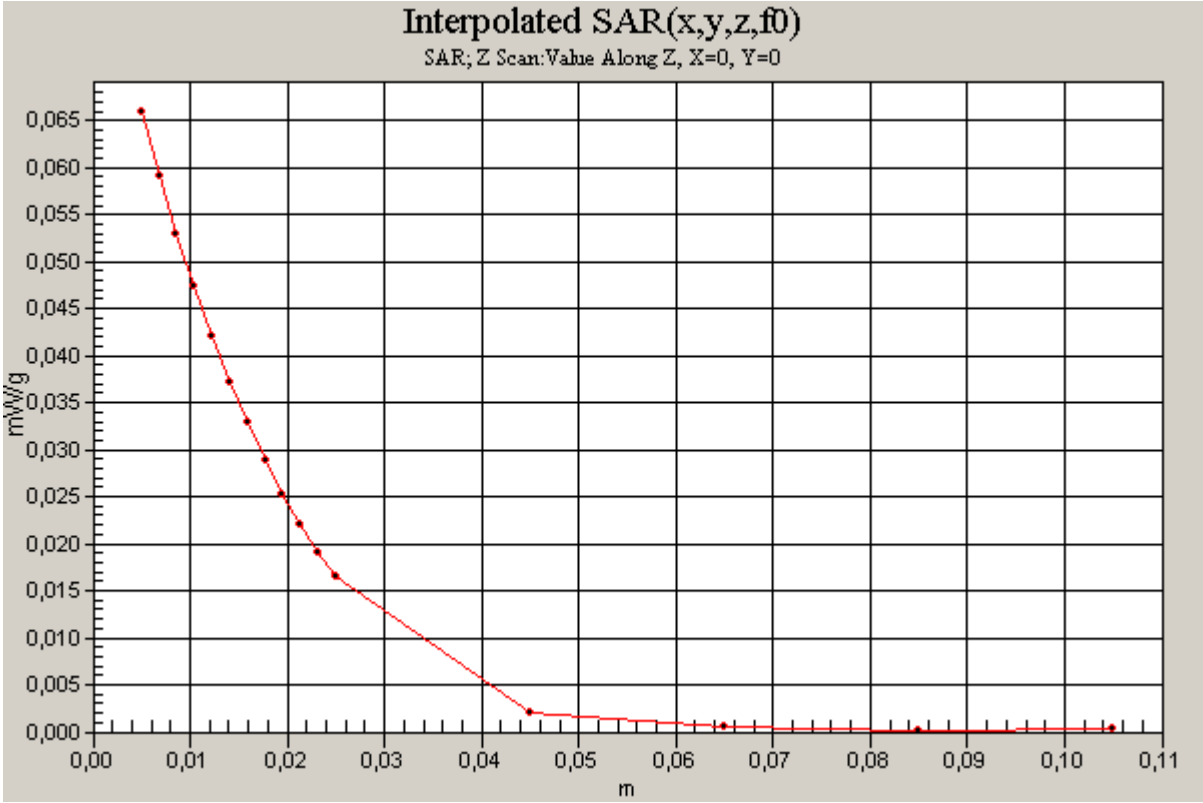
Interpolated SAR(x,y,z,f0)
SAR; Z Scan:Value Along Z, X=0, Y=0
mW/g
0,065
0,060
0,055
0,050
0,045
0,040
0,035
0,030
0,025
0,020
0,015
0,010
0,005
0,000
0,00
0,01
0,02
0,03
0,04
0,05
0,06
0,07
0,08
0,09
0,10
0,11
m

Date/Time: 2006-11-07 11:01:20

Test Laboratory: Sony Ericsson Mobile Communications
File Name: ch810_15mm_GPRS2Slot_Front_061107_RP.da4

DUT: PY7A1022044; Type: GSM900,1800,1900 ; Serial: #5988
Program Name: Measurement on the Body

Communication System: GSM1900_GPRS; Frequency: 1909.8 MHz;Duty Cycle: 1:4.15
Medium parameters used: f = 1909.8 MHz; σ = 1.56 mho/m; ε_r = 51.4; ρ = 1000 kg/m^3
Phantom section: Flat Section

DASY4 Configuration:
- Probe: ET3DV6 - SN1815; ConvF(4.6, 4.6, 4.6); Calibrated: 2006-01-20
- Sensor-Surface: 4mm (Mechanical Surface Detection)
- Electronics: DAE4 SN640; Calibrated: 2006-01-18
- Phantom: SAM 6; Type: SAM; Serial: 1351
- Measurement SW: DASY4, V4.6 Build 23; Postprocessing SW: SEMCAD, V1.8 Build 161

Flat,GPRS2Slots,15mm/Area Scan (61x121x1): Measurement grid: dx=10mm, dy=10mm
Maximum value of SAR (interpolated) = 0.153 mW/g

Flat,GPRS2Slots,15mm/Zoom Scan (5x5x7)/Cube 0: Measurement grid: dx=8mm, dy=8mm, dz=5mm
Reference Value = 8.58 V/m; Power Drift = -0.009 dB
Peak SAR (extrapolated) = 0.205 W/kg
SAR(1 g) = 0.141 mW/g; SAR(10 g) = 0.089 mW/g
Maximum value of SAR (measured) = 0.151 mW/g

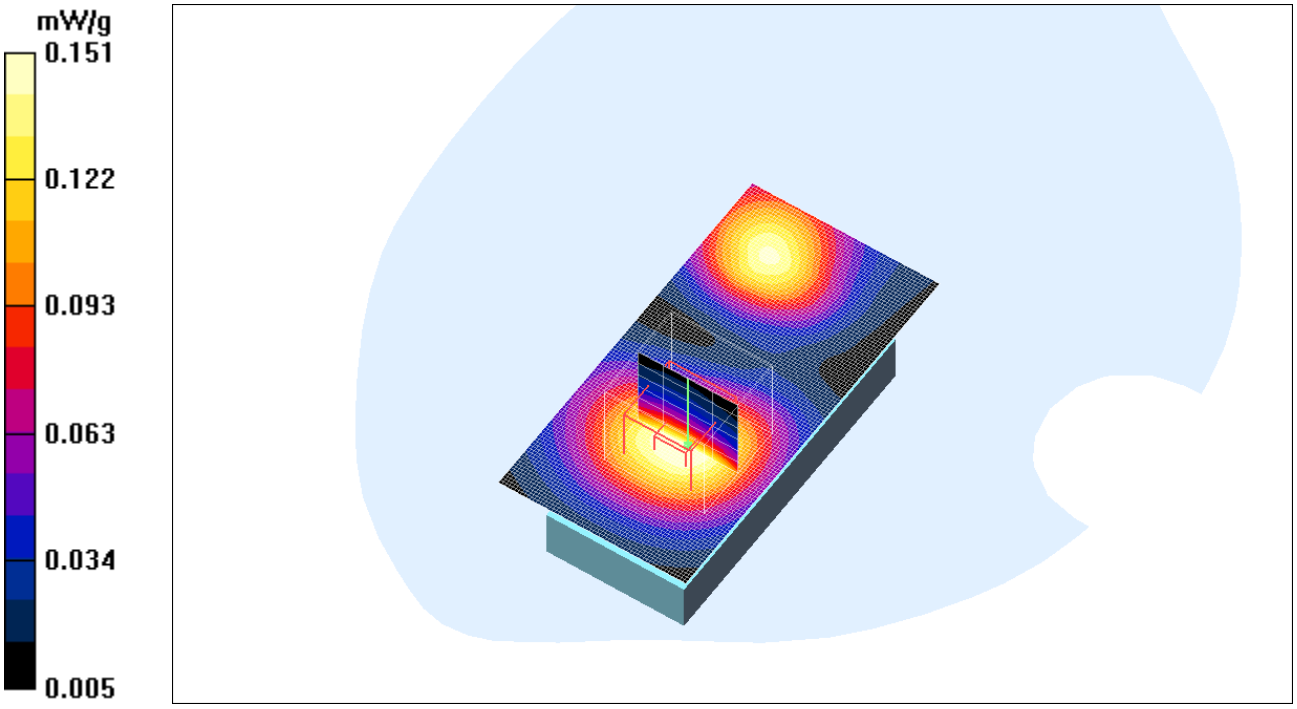

Date/Time: 2006-11-07 10:41:35

Test Laboratory: Sony Ericsson Mobile Communications
File Name: ch810_15mm_GPRS2Slot_061107_RP.da4

DUT: PY7A1022044; Type: GSM900,1800,1900 ; Serial: #5988
Program Name: Measurement on the Body

Communication System: GSM1900_GPRS; Frequency: 1909.8 MHz;Duty Cycle: 1:4.15
Medium parameters used: f = 1909.8 MHz; σ = 1.56 mho/m; ε_r = 51.4; ρ = 1000 kg/m^3
Phantom section: Flat Section

DASY4 Configuration:
- Probe: ET3DV6 - SN1815; ConvF(4.6, 4.6, 4.6); Calibrated: 2006-01-20
- Sensor-Surface: 4mm (Mechanical Surface Detection)Sensor-Surface: 0mm (Fix Surface)
- Electronics: DAE4 SN640; Calibrated: 2006-01-18
- Phantom: SAM 6; Type: SAM; Serial: 1351
- Measurement SW: DASY4, V4.6 Build 23; Postprocessing SW: SEMCAD, V1.8 Build 161

Flat,GPRS2Slots,15mm/Area Scan (61x121x1): Measurement grid: dx=10mm, dy=10mm
Maximum value of SAR (interpolated) = 0.525 mW/g

Flat,GPRS2Slots,15mm/Zoom Scan (5x5x7)/Cube 0: Measurement grid: dx=8mm, dy=8mm, dz=5mm
Reference Value = 13.1 V/m; Power Drift = 0.002 dB
Peak SAR (extrapolated) = 0.777 W/kg
SAR(1 g) = 0.471 mW/g; SAR(10 g) = 0.274 mW/g
Maximum value of SAR (measured) = 0.521 mW/g

Flat,GPRS2Slots,15mm/Z Scan (1x1x16): Measurement grid: dx=20mm, dy=20mm, dz=20mm
Maximum value of SAR (interpolated) = 0.120 mW/g

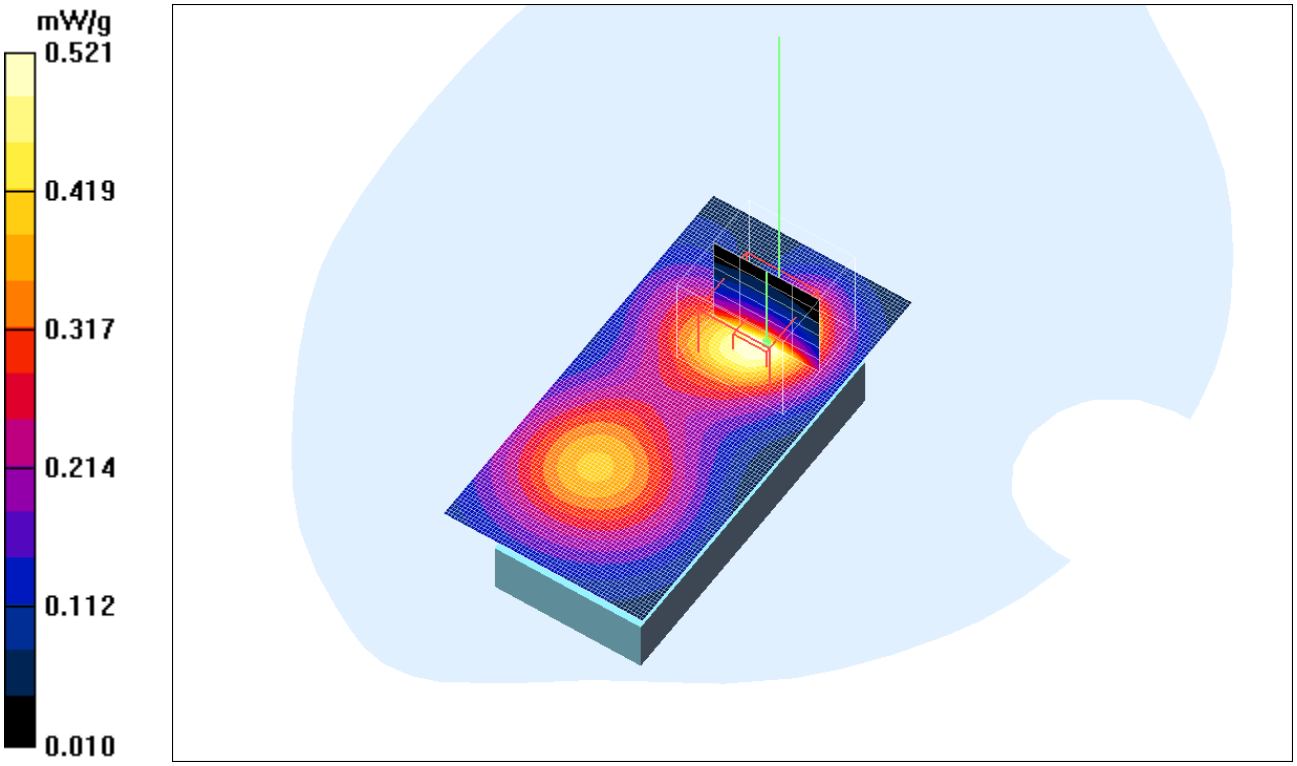

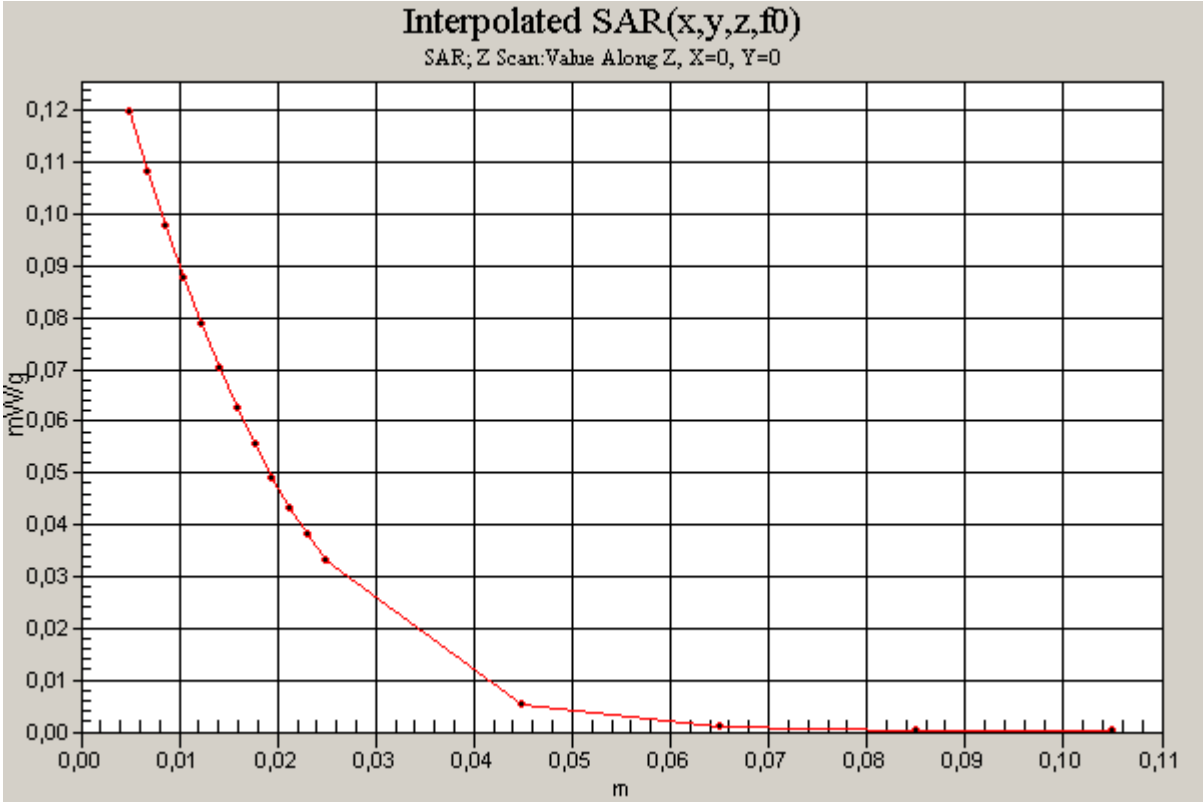
Interpolated SAR(x,y,z,f0)
SAR; Z Scan:Value Along Z, X=0, Y=0
mW/g
0,12
0,11
0,10
0,09
0,08
0,07
0,06
0,05
0,04
0,03
0,02
0,01
0,00
0,00
0,01
0,02
0,03
0,04
0,05
0,06
0,07
0,08
0,09
0,10
0,11
m

Date/Time: 2006-11-07 13:23:50

Test Laboratory: Sony Ericsson Mobile Communications
File Name: ch810_15mm_PHF_061107_RP.da4

DUT: PY7A1022044; Type: GSM900,1800,1900 ; Serial: #5988
Program Name: Measurement on the Body

Communication System: GSM 1900; Frequency: 1909.8 MHz;Duty Cycle: 1:8.3
Medium parameters used: f = 1909.8 MHz; σ = 1.56 mho/m; ε_r = 51.4; ρ = 1000 kg/m^3
Phantom section: Flat Section

DASY4 Configuration:
- Probe: ET3DV6 - SN1815; ConvF(4.6, 4.6, 4.6); Calibrated: 2006-01-20
- Sensor-Surface: 4mm (Mechanical Surface Detection)
- Electronics: DAE4 SN640; Calibrated: 2006-01-18
- Phantom: SAM 6; Type: SAM; Serial: 1351
- Measurement SW: DASY4, V4.6 Build 23; Postprocessing SW: SEMCAD, V1.8 Build 161

Flat,PHF,15mm/Area Scan (61x121x1): Measurement grid: dx=10mm, dy=10mm
Maximum value of SAR (interpolated) = 0.282 mW/g

Flat,PHF,15mm/Zoom Scan (5x5x7)/Cube 0: Measurement grid: dx=8mm, dy=8mm, dz=5mm
Reference Value = 10.6 V/m; Power Drift = -0.061 dB
Peak SAR (extrapolated) = 0.419 W/kg
SAR(1 g) = 0.256 mW/g; SAR(10 g) = 0.151 mW/g
Maximum value of SAR (measured) = 0.282 mW/g

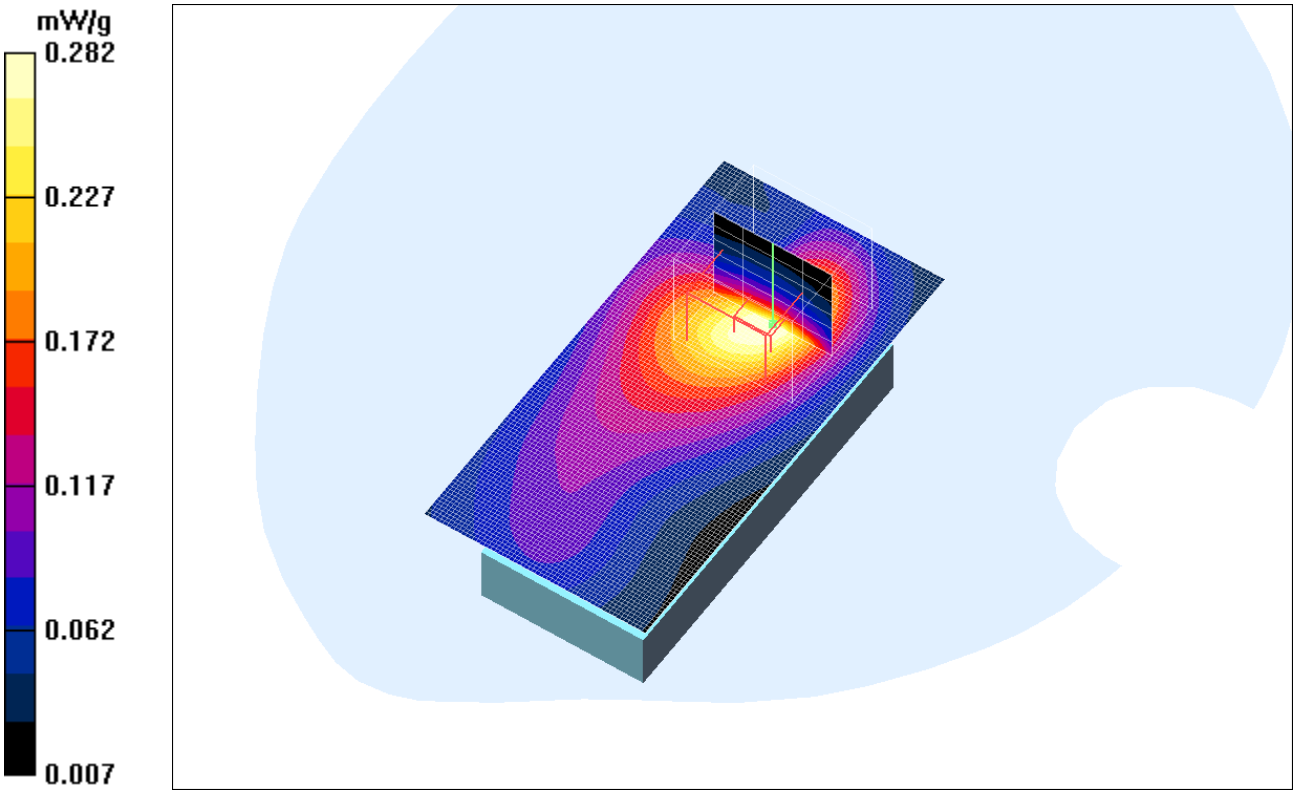

Calibration Laboratory of
Schmid & Partner
Engineering AG
Zeughausstrasse 43, 8004 Zurich, Switzerland

S Schweizerischer Kalibrierdienst
C Service suisse d'étalonnage
Servizio svizzero di taratura
S Swiss Calibration Service

Accredited by the Swiss Federal Office of Metrology and Accreditation
The Swiss Accreditation Service is one of the signatories to the EA Multilateral Agreement for the recognition of calibration certificates

Accreditation No.: SCS 108

Client Sony Ericsson Lund

Certificate No: ET3-1815_Jan06

CALIBRATION CERTIFICATE

Object	ET3DV6 - SN:1815
Calibration procedure(s)	QA CAL-01.v5 Calibration procedure for dosimetric E-field probes
Calibration date:	January 20, 2006
Condition of the calibrated item	In Tolerance

This calibration certificate documents the traceability to national standards, which realize the physical units of measurements (SI).
The measurements and the uncertainties with confidence probability are given on the following pages and are part of the certificate.

All calibrations have been conducted in the closed laboratory facility: environment temperature (22 ± 3)°C and humidity < 70%.

Calibration Equipment used (M&TE critical for calibration)

Primary Standards	ID #	Cal Date (Calibrated by, Certificate No.)	Scheduled Calibration
Power meter E4419B	GB41293874	3-May-05 (METAS, No. 251-00466)	May-06
Power sensor E4412A	MY41495277	3-May-05 (METAS, No. 251-00466)	May-06
Power sensor E4412A	MY41498087	3-May-05 (METAS, No. 251-00466)	May-06
Reference 3 dB Attenuator	SN: S5054 (3c)	11-Aug-05 (METAS, No. 251-00499)	Aug-06
Reference 20 dB Attenuator	SN: S5086 (20b)	3-May-05 (METAS, No. 251-00467)	May-06
Reference 30 dB Attenuator	SN: S5129 (30b)	11-Aug-05 (METAS, No. 251-00500)	Aug-06
Reference Probe ES3DV2	SN: 3013	2-Jan-06 (SPEAG, No. ES3-3013_Jan06)	Jan-07
DAE4	SN: 654	27-Oct-05 (SPEAG, No. DAE4-654_Oct05)	Oct-06

Secondary Standards	ID #	Check Date (in house)	Scheduled Check
RF generator HP 8648C	US3642U01700	4-Aug-99 (SPEAG, in house check Nov-05)	In house check: Nov-07
Network Analyzer HP 8753E	US37390585	18-Oct-01 (SPEAG, in house check Nov-05)	In house check: Nov 06

	Name	Function	Signature
Calibrated by:	Katja Pokovic	Technical Manager	
Approved by:	Fin Bomholt	R&D Director	

Issued: January 20, 2006

This calibration certificate shall not be reproduced except in full without written approval of the laboratory.

Glossary:

TSL	tissue simulating liquid
NORMx,y,z	sensitivity in free space
ConF	sensitivity in TSL / NORMx,y,z
DCP	diode compression point
Polarization φ	φ rotation around probe axis
Polarization ϑ	ϑ rotation around an axis that is in the plane normal to probe axis (at measurement center), i.e., $\vartheta = 0$ is normal to probe axis

Calibration is Performed According to the Following Standards:

a) IEEE Std 1528-2003, "IEEE Recommended Practice for Determining the Peak Spatial-Averaged Specific Absorption Rate (SAR) in the Human Head from Wireless Communications Devices: Measurement Techniques", December 2003
b) CENELEC EN 50361, "Basic standard for the measurement of Specific Absorption Rate related to human exposure to electromagnetic fields from mobile phones (300 MHz - 3 GHz), July 2001

Methods Applied and Interpretation of Parameters:

- *NORMx,y,z:* Assessed for E-field polarization $\vartheta = 0$ ($f \leq 900$ MHz in TEM-cell; $f > 1800$ MHz: R22 waveguide). NORMx,y,z are only intermediate values, i.e., the uncertainties of NORMx,y,z does not effect the E^2-field uncertainty inside TSL (see below *ConvF*).
- *NORM(f)x,y,z = NORMx,y,z * frequency_response* (see Frequency Response Chart). This linearization is implemented in DASY4 software versions later than 4.2. The uncertainty of the frequency response is included in the stated uncertainty of *ConvF*.
- *DCPx,y,z:* DCP are numerical linearization parameters assessed based on the data of power sweep (no uncertainty required). DCP does not depend on frequency nor media.
- *ConvF and Boundary Effect Parameters:* Assessed in flat phantom using E-field (or Temperature Transfer Standard for $f \leq 800$ MHz) and inside waveguide using analytical field distributions based on power measurements for $f > 800$ MHz. The same setups are used for assessment of the parameters applied for boundary compensation (alpha, depth) of which typical uncertainty values are given. These parameters are used in DASY4 software to improve probe accuracy close to the boundary. The sensitivity in TSL corresponds to *NORMx,y,z * ConvF* whereby the uncertainty corresponds to that given for *ConvF*. A frequency dependent *ConvF* is used in DASY version 4.4 and higher which allows extending the validity from ± 50 MHz to ± 100 MHz.
- *Spherical isotropy (3D deviation from isotropy)*: in a field of low gradients realized using a flat phantom exposed by a patch antenna.
- *Sensor Offset*: The sensor offset corresponds to the offset of virtual measurement center from the probe tip (on probe axis). No tolerance required.

Probe ET3DV6

SN:1815

Manufactured:	February 27, 2004
Last calibrated:	January 20, 2005
Recalibrated:	January 20, 2006

Calibrated for DASY Systems

(Note: non-compatible with DASY2 system!)

DASY - Parameters of Probe: ET3DV6 SN:1815

Sensitivity in Free Space[A]

NormX	**1.95** ± 10.1%	$\mu V/(V/m)^2$	DCP X	**93** mV
NormY	**2.02** ± 10.1%	$\mu V/(V/m)^2$	DCP Y	**93** mV
NormZ	**2.04** ± 10.1%	$\mu V/(V/m)^2$	DCP Z	**93** mV

Diode Compression[B]

Sensitivity in Tissue Simulating Liquid (Conversion Factors)

Please see Page 8.

Boundary Effect

TSL **900 MHz** **Typical SAR gradient: 5 % per mm**

Sensor Center to Phantom Surface Distance		**3.7 mm**	**4.7 mm**
SAR_{be} [%]	Without Correction Algorithm	7.7	4.3
SAR_{be} [%]	With Correction Algorithm	0.0	0.2

TSL **1750 MHz** **Typical SAR gradient: 10 % per mm**

Sensor Center to Phantom Surface Distance		**3.7 mm**	**4.7 mm**
SAR_{be} [%]	Without Correction Algorithm	6.8	3.9
SAR_{be} [%]	With Correction Algorithm	0.1	0.3

Sensor Offset

Probe Tip to Sensor Center	**2.7** mm
Optical Surface Detection	**low, but repeatable**

The reported uncertainty of measurement is stated as the standard uncertainty of measurement multiplied by the coverage factor k=2, which for a normal distribution corresponds to a coverage probability of approximately 95%.

[A] The uncertainties of NormX,Y,Z do not affect the E^2-field uncertainty inside TSL (see Page 8).

[B] Numerical linearization parameter: uncertainty not required.

Frequency Response of E-Field

(TEM-Cell:ifi110 EXX, Waveguide: R22)

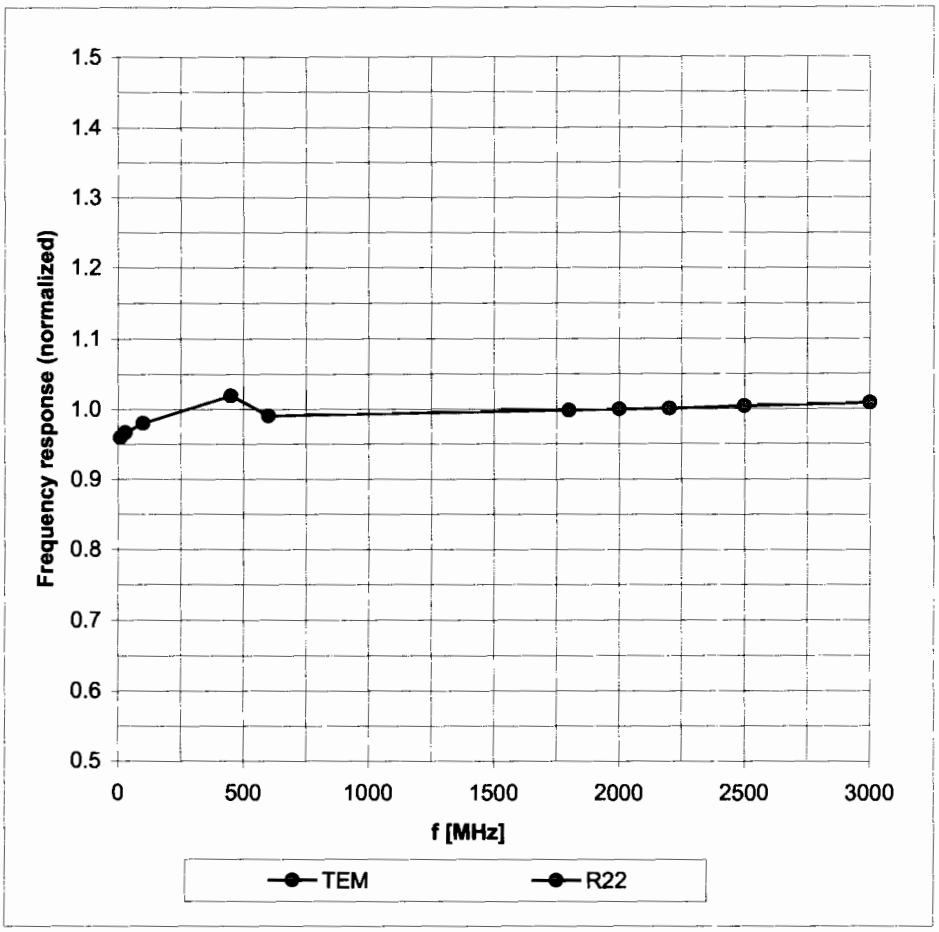

Uncertainty of Frequency Response of E-field: ± 6.3% (k=2)

Receiving Pattern (ϕ), ϑ = 0°

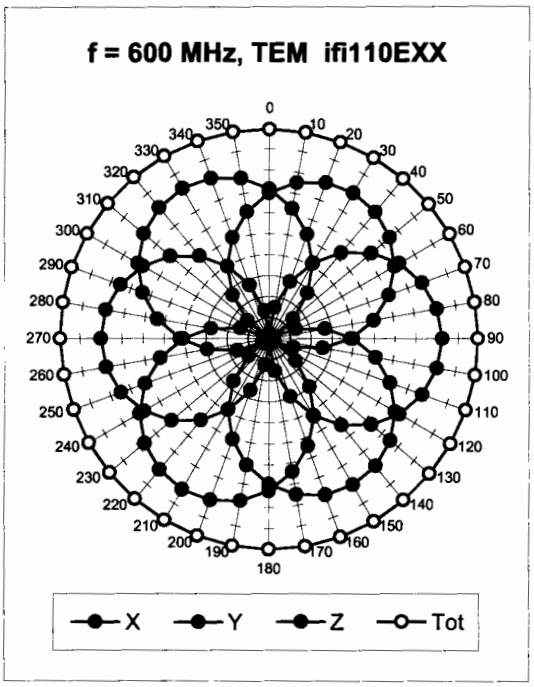

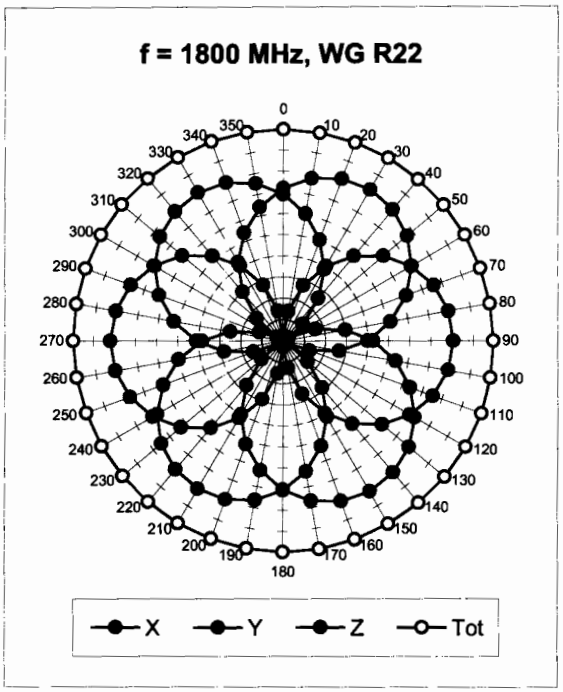

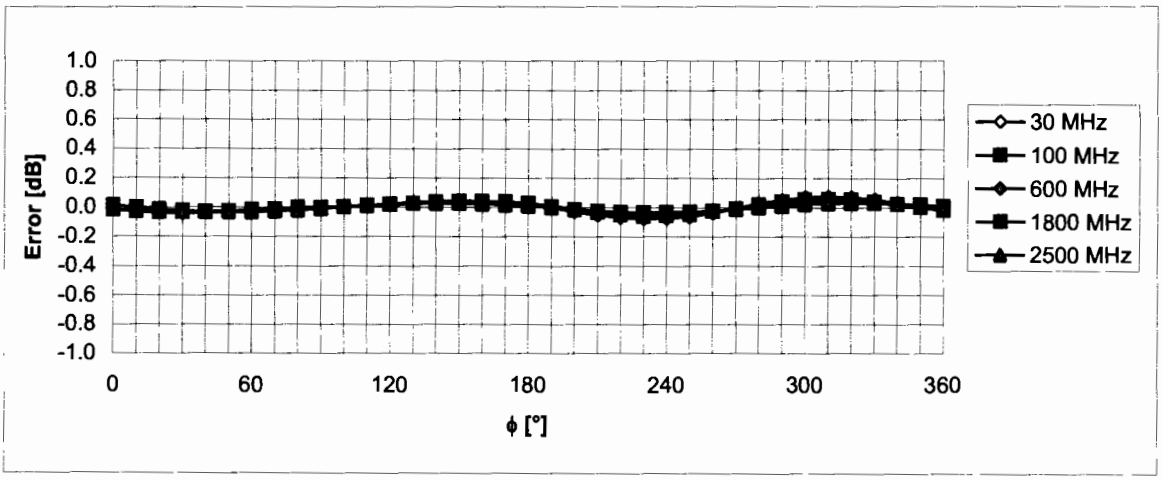

Uncertainty of Axial Isotropy Assessment: ± 0.5% (k=2)

Dynamic Range f(SAR_{head})

(Waveguide R22, f = 1800 MHz)

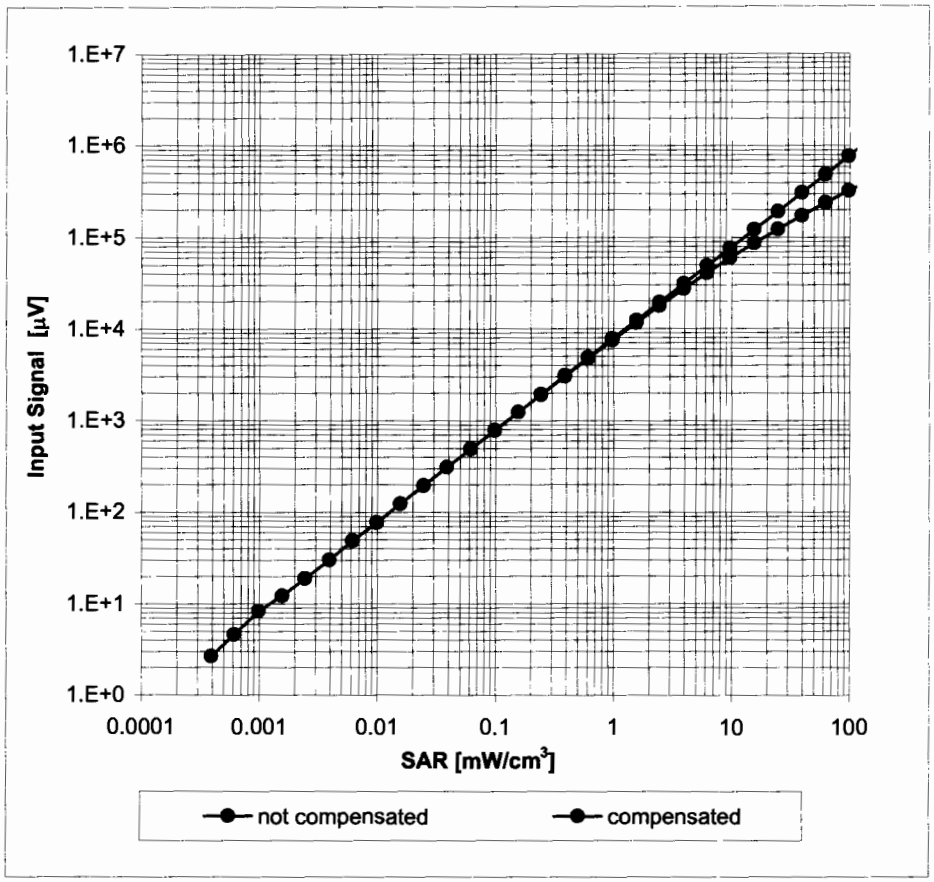

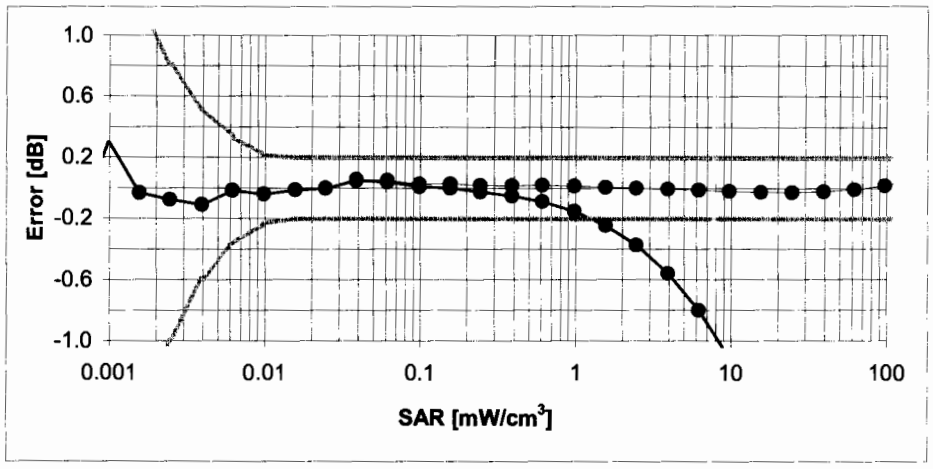

Uncertainty of Linearity Assessment: ± 0.6% (k=2)

Conversion Factor Assessment

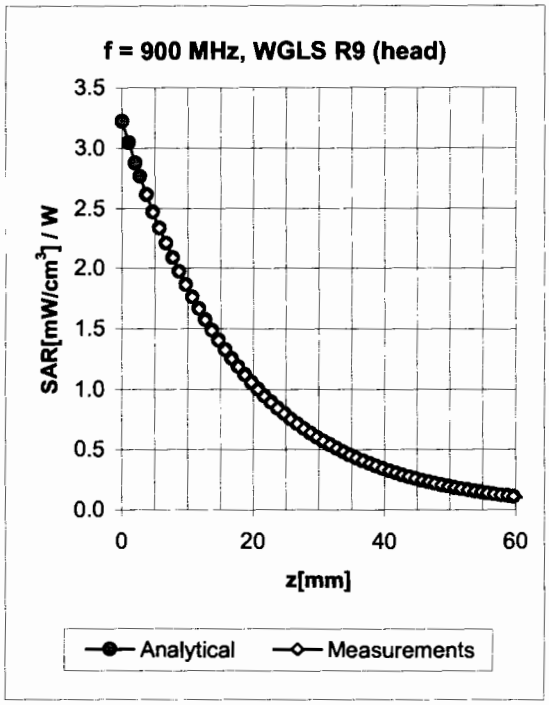

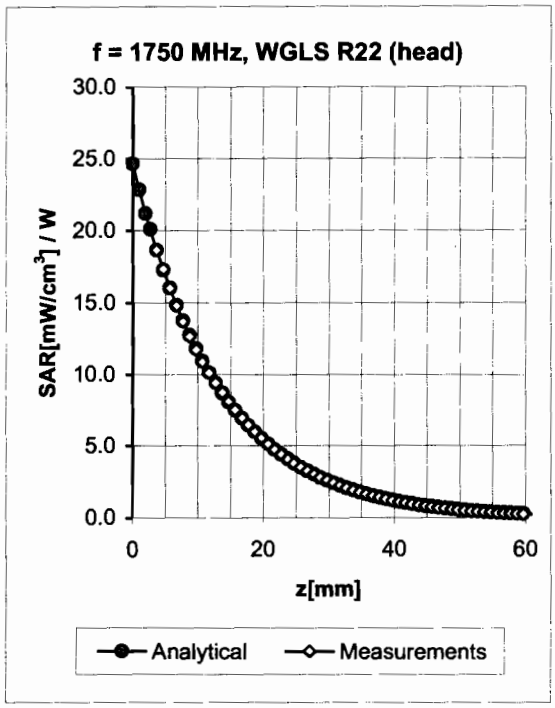

f [MHz]	Validity [MHz][C]	TSL	Permittivity	Conductivity	Alpha	Depth	ConvF Uncertainty
835	± 50 / ± 100	Head	41.5 ± 5%	0.90 ± 5%	0.54	1.76	6.82 ± 11.0% (k=2)
900	± 50 / ± 100	Head	41.5 ± 5%	0.97 ± 5%	0.48	1.93	6.66 ± 11.0% (k=2)
1750	± 50 / ± 100	Head	40.1 ± 5%	1.37 ± 5%	0.54	1.72	5.40 ± 11.0% (k=2)
1900	± 50 / ± 100	Head	40.0 ± 5%	1.40 ± 5%	0.60	1.66	5.23 ± 11.0% (k=2)
2450	± 50 / ± 100	Head	39.2 ± 5%	1.80 ± 5%	0.60	1.42	4.57 ± 11.8% (k=2)
835	± 50 / ± 100	Body	55.2 ± 5%	0.97 ± 5%	0.42	2.10	6.51 ± 11.0% (k=2)
900	± 50 / ± 100	Body	55.0 ± 5%	1.05 ± 5%	0.41	2.19	6.36 ± 11.0% (k=2)
1750	± 50 / ± 100	Body	53.4 ± 5%	1.49 ± 5%	0.65	1.97	4.85 ± 11.0% (k=2)
1900	± 50 / ± 100	Body	53.3 ± 5%	1.52 ± 5%	0.62	2.14	4.60 ± 11.0% (k=2)
2450	± 50 / ± 100	Body	52.7 ± 5%	1.95 ± 5%	0.40	2.06	4.20 ± 11.8% (k=2)

[C] The validity of ± 100 MHz only applies for DASY v4.4 and higher (see Page 2). The uncertainty is the RSS of the ConvF uncertainty at calibration frequency and the uncertainty for the indicated frequency band.

Deviation from Isotropy in HSL

Error (ϕ, ϑ), f = 900 MHz

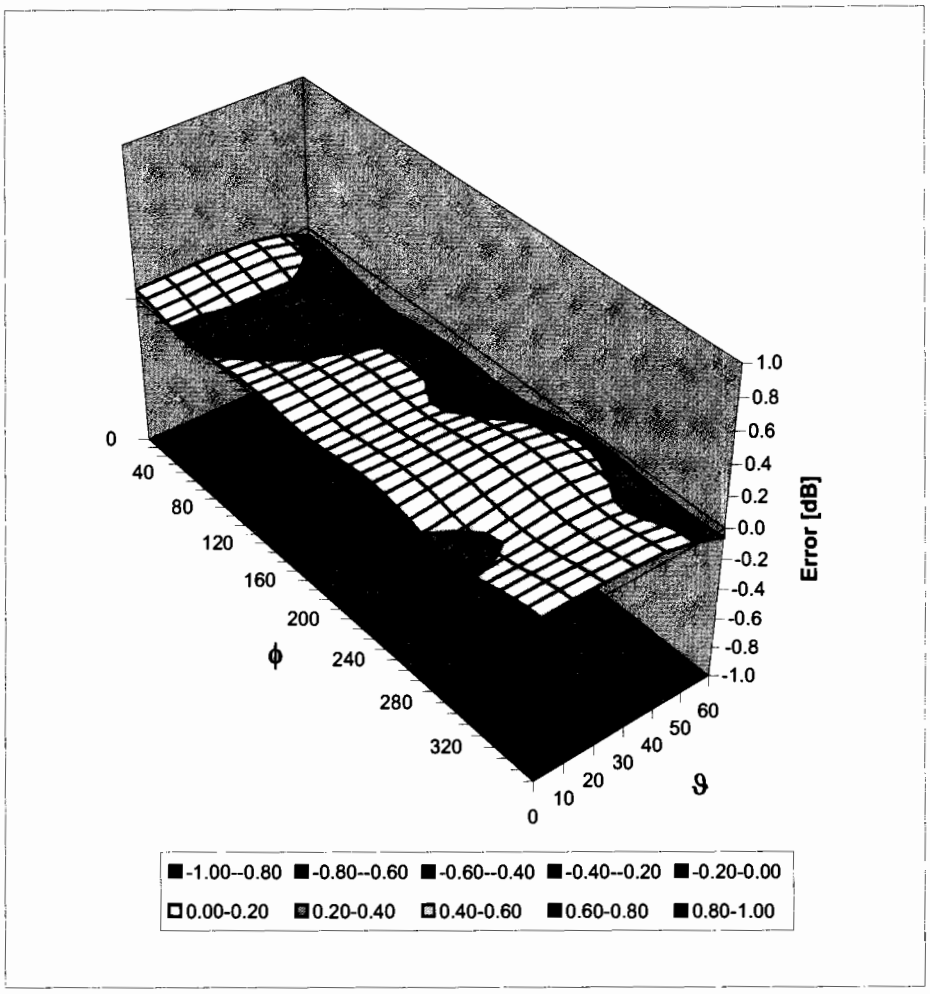

Uncertainty of Spherical Isotropy Assessment: ± 2.6% (k=2)