DASY4 Validation Report for Head TSL

Date/Time: 08.03.2005 10:35:22

Test Laboratory: SPEAG, Zurich, Switzerland

DUT: Dipole 835 MHz; Type: D835V2; Serial: D835V2 - SN484

Communication System: CW-835; Frequency: 835 MHz;Duty Cycle: 1:1
Medium: HSL 835 MHz;
Medium parameters used: f = 835 MHz; σ = 0.91 mho/m; ε_r = 42; ρ = 1000 kg/m^3
Phantom section: Flat Section
Measurement Standard: DASY4 (High Precision Assessment)

DASY4 Configuration:

- Probe: ET3DV6 - SN1507; ConvF(6.24, 6.24, 6.24); Calibrated: 26.10.2004
- Sensor-Surface: 4mm (Mechanical Surface Detection)
- Electronics: DAE4 Sn601; Calibrated: 07.01.2005
- Phantom: Flat Phantom 4.9L; Type: QD000P49AA; Serial: 1001;
- Measurement SW: DASY4, V4.5 Build 19; Postprocessing SW: SEMCAD, V1.8 Build 144

Pin = 250 mW; d = 15 mm/Area Scan (81x81x1): Measurement grid: dx=15mm, dy=15mm
Maximum value of SAR (interpolated) = 2.46 mW/g

Pin = 250 mW; d = 15 mm/Zoom Scan (7x7x7)/Cube 0: Measurement grid: dx=5mm, dy=5mm, dz=5mm
Reference Value = 54.0 V/m; Power Drift = 0.015 dB
Peak SAR (extrapolated) = 3.29 W/kg
SAR(1 g) = 2.27 mW/g; SAR(10 g) = 1.49 mW/g
Maximum value of SAR (measured) = 2.44 mW/g

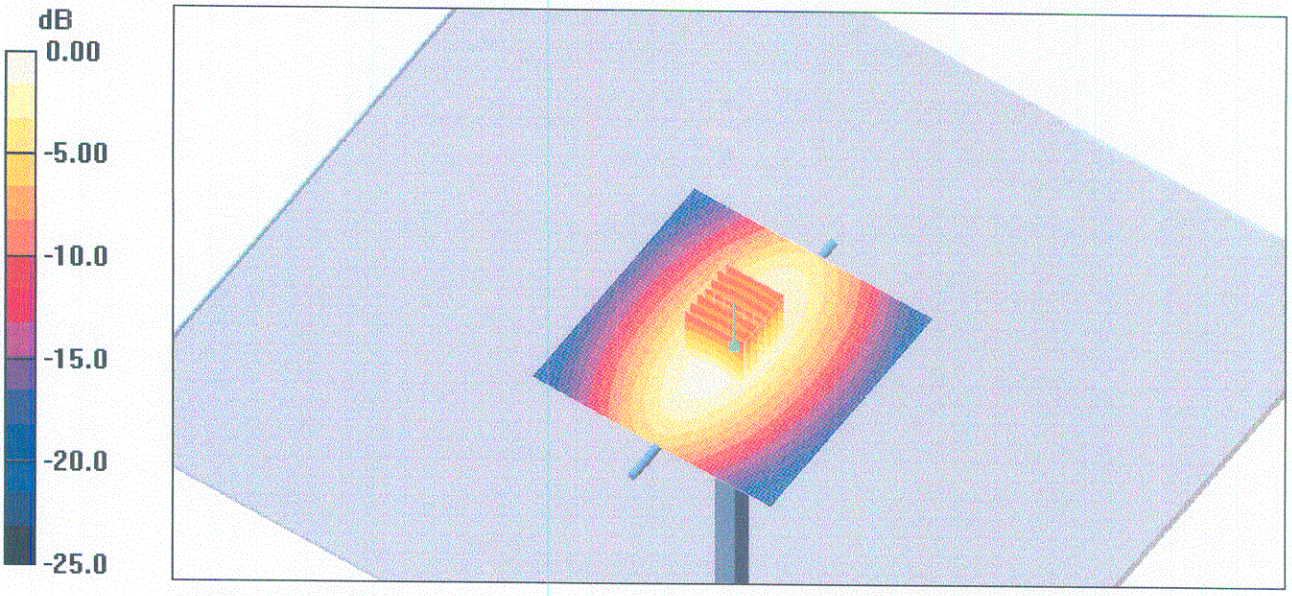

0 dB = 2.44mW/g

DASY4 Validation Report for Body TSL

Date/Time: 14.03.2005 10:51:59

Test Laboratory: SPEAG, Zurich, Switzerland

DUT: Dipole 835 MHz; Type: D835V2; Serial: D835V2 - SN484

Communication System: CW-835; Frequency: 835 MHz;Duty Cycle: 1:1
Medium: M900;
Medium parameters used: f = 835 MHz; σ = 1.01 mho/m; ε_r = 54.9; ρ = 1000 kg/m^3
Phantom section: Flat Section
Measurement Standard: DASY4 (High Precision Assessment)

DASY4 Configuration:

- Probe: ET3DV6 - SN1507; ConvF(5.98, 5.98, 5.98); Calibrated: 26.10.2004
- Sensor-Surface: 4mm (Mechanical Surface Detection)
- Electronics: DAE4 Sn601; Calibrated: 07.01.2005
- Phantom: Flat Phantom 4.9L; Type: QD000P49AA; Serial: 1001;
- Measurement SW: DASY4, V4.5 Build 19; Postprocessing SW: SEMCAD, V1.8 Build 146

Pin = 250 mW; d = 15 mm/Area Scan (81x81x1): Measurement grid: dx=15mm, dy=15mm
Maximum value of SAR (interpolated) = 2.57 mW/g

Pin = 250 mW; d = 15 mm/Zoom Scan (7x7x7)/Cube 0: Measurement grid: dx=5mm, dy=5mm, dz=5mm
Reference Value = 52.6 V/m; Power Drift = 0.025 dB
Peak SAR (extrapolated) = 3.36 W/kg
SAR(1 g) = 2.37 mW/g; SAR(10 g) = 1.56 mW/g
Maximum value of SAR (measured) = 2.58 mW/g

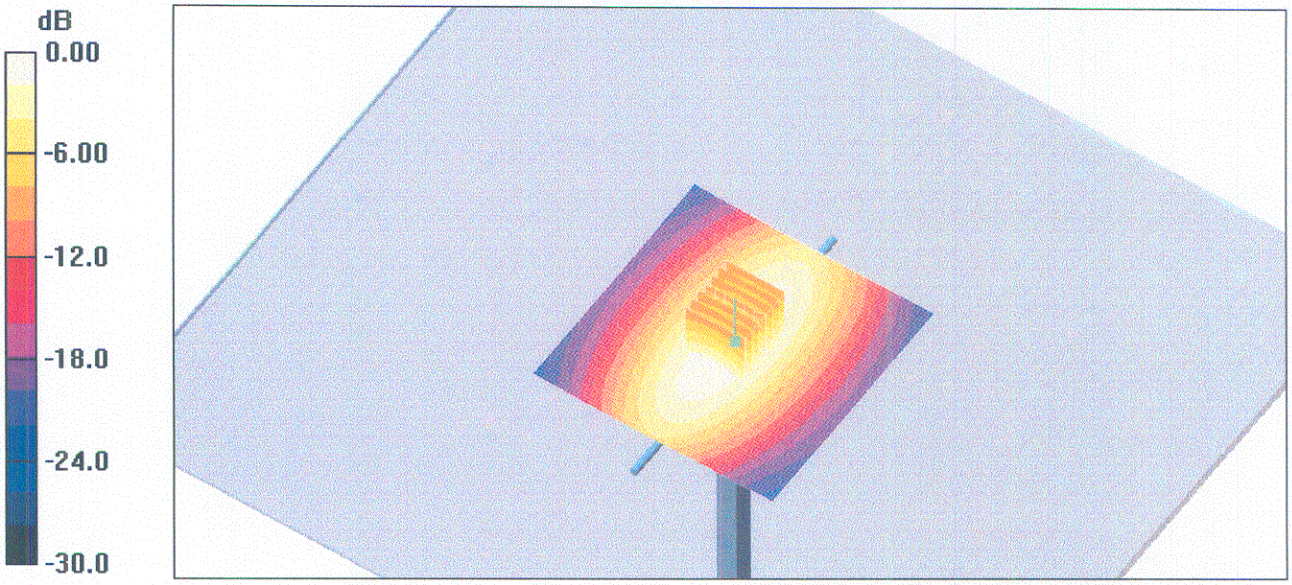

0 dB = 2.58mW/g

DASY4 Validation Report for Head TSL

Date/Time: 09.03.2005 15:20:45

Test Laboratory: SPEAG, Zurich, Switzerland

DUT: Dipole 1900 MHz; Type: D1900V2; Serial: D1900V2 - SN:5d002

Communication System: CW-1900; Frequency: 1900 MHz;Duty Cycle: 1:1
Medium: HSL 1900 MHz;
Medium parameters used: f = 1900 MHz; σ = 1.46 mho/m; ε_r = 39.5; ρ = 1000 kg/m^3
Phantom section: Flat Section
Measurement Standard: DASY4 (High Precision Assessment)

DASY4 Configuration:

- Probe: ET3DV6 - SN1507; ConvF(4.96, 4.96, 4.96); Calibrated: 26.10.2004
- Sensor-Surface: 4mm (Mechanical Surface Detection)
- Electronics: DAE4 Sn601; Calibrated: 07.01.2005
- Phantom: Flat Phantom 5.0; Type: QD000P50AA; Serial: 1001;
- Measurement SW: DASY4, V4.5 Build 19; Postprocessing SW: SEMCAD, V1.8 Build 146

Pin = 250 mW; d = 10 mm/Area Scan (81x81x1): Measurement grid: dx=15mm, dy=15mm
Maximum value of SAR (interpolated) = 11.4 mW/g

Pin = 250 mW; d = 10 mm/Zoom Scan (7x7x7)/Cube 0: Measurement grid: dx=5mm, dy=5mm, dz=5mm
Reference Value = 91.4 V/m; Power Drift = 0.037 dB
Peak SAR (extrapolated) = 16.9 W/kg
SAR(1 g) = 9.81 mW/g; SAR(10 g) = 5.15 mW/g
Maximum value of SAR (measured) = 11.0 mW/g

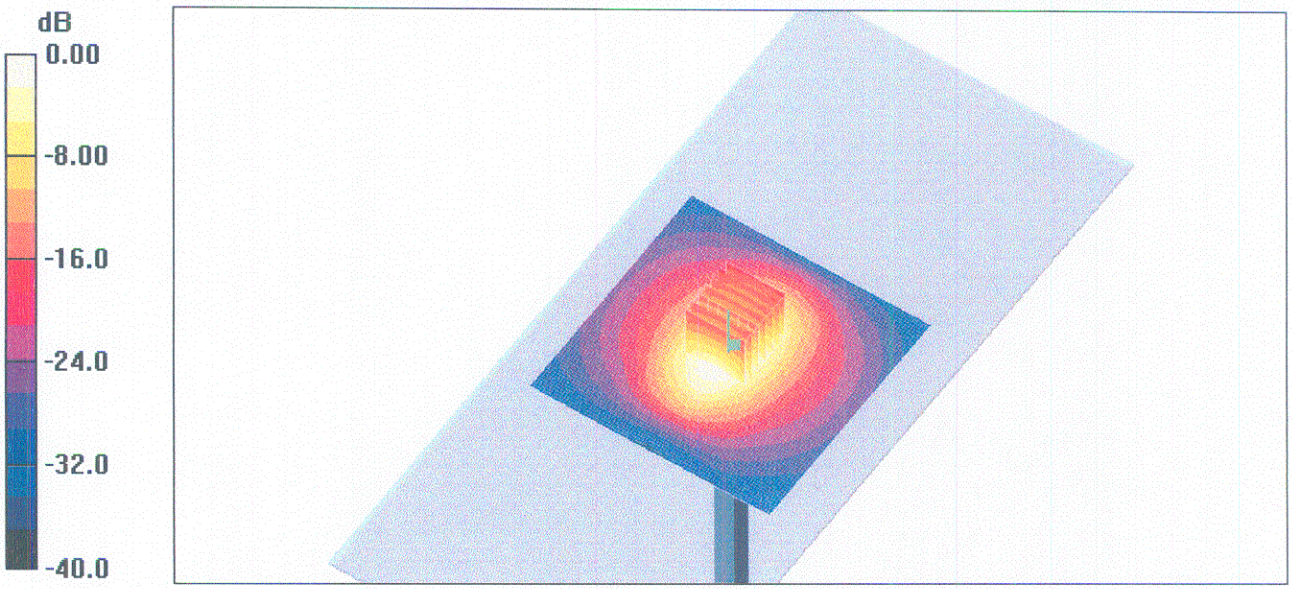

0 dB = 11.0mW/g

DASY4 Validation Report for Body TSL

Date/Time: 15.03.2005 15:20:32

Test Laboratory: SPEAG, Zurich, Switzerland

DUT: Dipole 1900 MHz; Type: D1900V2; Serial: D1900V2 - SN:5d002

Communication System: CW-1900; Frequency: 1900 MHz;Duty Cycle: 1:1
Medium: MSL 1900 MHz;
Medium parameters used: f = 1900 MHz; σ = 1.57 mho/m; ε_r = 52.2; ρ = 1000 kg/m^3
Phantom section: Flat Section
Measurement Standard: DASY4 (High Precision Assessment)

DASY4 Configuration:

- Probe: ET3DV6 - SN1507; ConvF(4.43, 4.43, 4.43); Calibrated: 26.10.2004
- Sensor-Surface: 4mm (Mechanical Surface Detection)
- Electronics: DAE4 Sn601; Calibrated: 07.01.2005
- Phantom: Flat Phantom 5.0; Type: QD000P50AA; Serial: 1001;
- Measurement SW: DASY4, V4.5 Build 19; Postprocessing SW: SEMCAD, V1.8 Build 146

Pin = 250 mW; d = 10 mm/Area Scan (81x81x1): Measurement grid: dx=15mm, dy=15mm
Maximum value of SAR (interpolated) = 11.4 mW/g

Pin = 250 mW; d = 10 mm/Zoom Scan (7x7x7)/Cube 0: Measurement grid: dx=5mm, dy=5mm, dz=5mm
Reference Value = 87.3 V/m; Power Drift = 0.061 dB
Peak SAR (extrapolated) = 16.8 W/kg
SAR(1 g) = 9.91 mW/g; SAR(10 g) = 5.23 mW/g
Maximum value of SAR (measured) = 11.3 mW/g

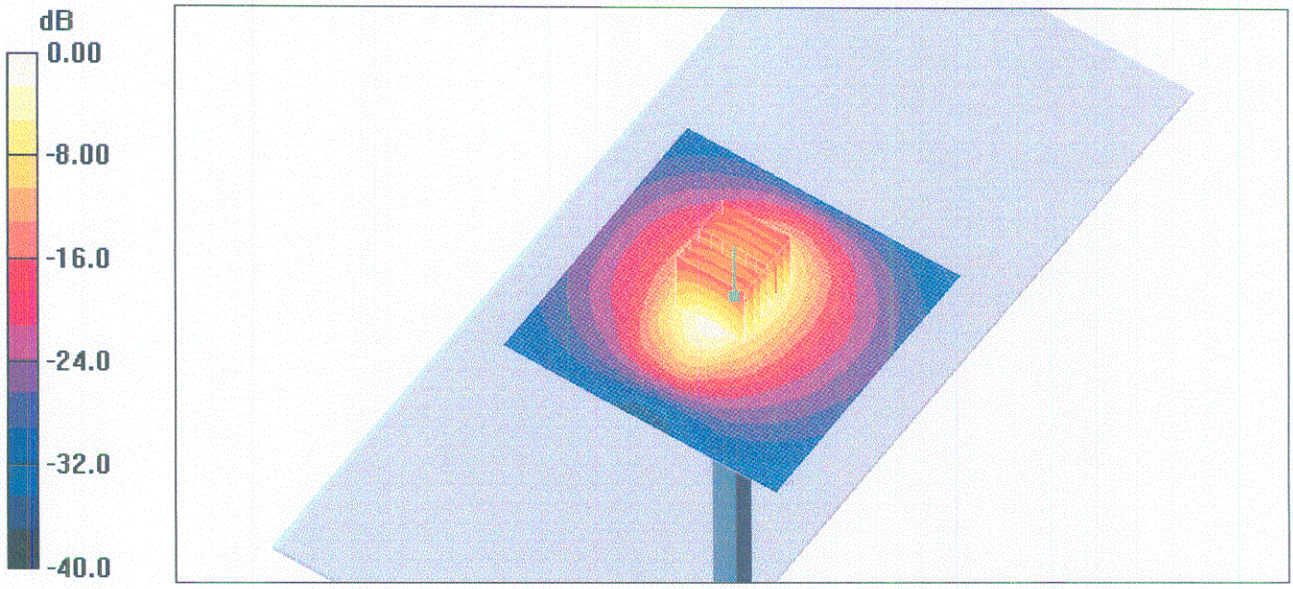

0 dB = 11.3mW/g

Date/Time: 2006-02-01 09:32:28

Test Laboratory: Sony Ericsson Mobile Communications
File Name: Verification Measurement 1900MHz_060201_RP.da4

DUT: Dipole 1900 MHz; Type: D1900V2; Serial: D1900V2 - SN:5d002
Program Name: Verification Measurement on 1900MHz with HSL

Communication System: CW; Frequency: 1900 MHz;Duty Cycle: 1:1
Medium parameters used: f = 1900 MHz; σ = 1.47 mho/m; ε_r = 39; ρ = 1000 kg/m^3
Phantom section: Flat Section

DASY4 Configuration:
- Probe: ET3DV6 - SN1815; ConvF(5.23, 5.23, 5.23); Calibrated: 2006-01-20
- Sensor-Surface: 4mm (Mechanical Surface Detection)
- Electronics: DAE4 SN640; Calibrated: 2006-01-18
- Phantom: SAM 6; Type: SAM; Serial: 1351
- Measurement SW: DASY4, V4.6 Build 23; Postprocessing SW: SEMCAD, V1.8 Build 160

Flat, 10mm/Area Scan (71x71x1): Measurement grid: dx=10mm, dy=10mm
Maximum value of SAR (interpolated) = 4.63 mW/g

Flat, 10mm/Zoom Scan (5x5x7)/Cube 0: Measurement grid: dx=8mm, dy=8mm, dz=5mm
Reference Value = 57.8 V/m; Power Drift = -0.046 dB
Peak SAR (extrapolated) = 8.14 W/kg
SAR(1 g) = 4.15 mW/g; SAR(10 g) = 2.11 mW/g
Maximum value of SAR (measured) = 4.62 mW/g

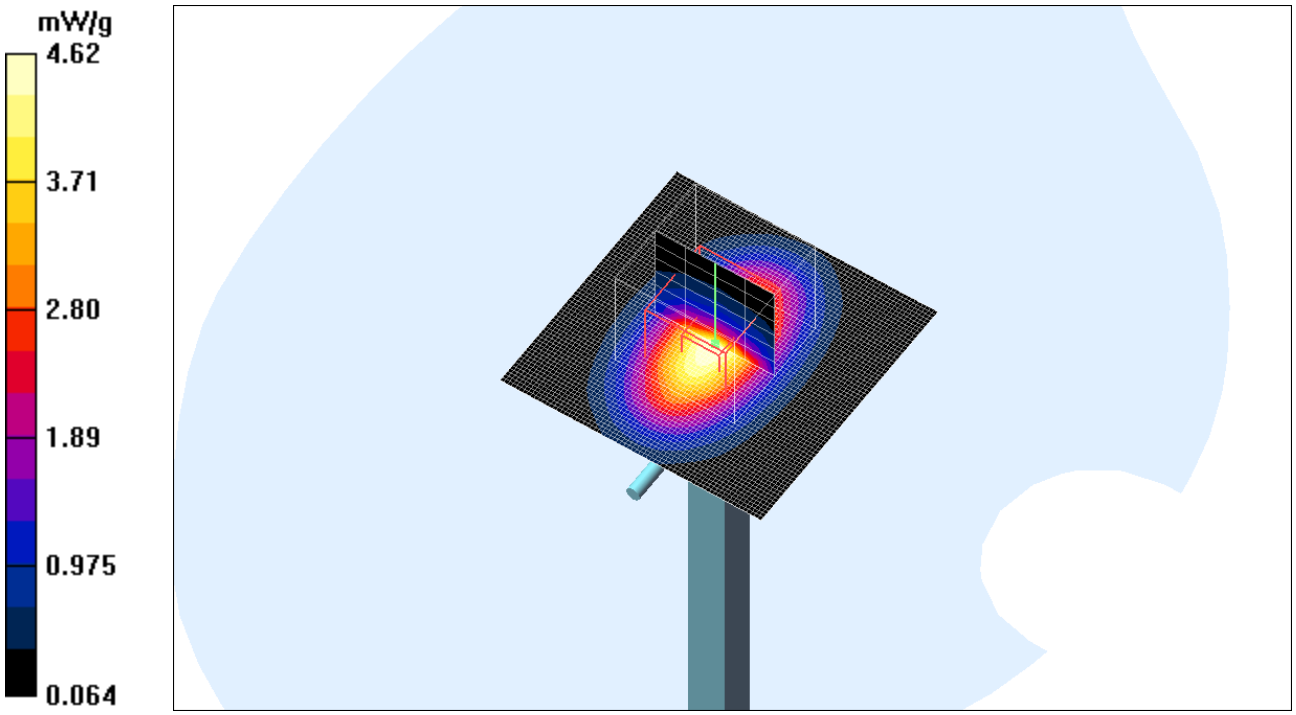

Date/Time: 2006-02-03 10:10:57

Test Laboratory: Sony Ericsson Mobile Communications
File Name: Verification Measurement 835MHz_060203_RP.da4

DUT: Dipole 835 MHz; Type: D835V2; Serial: D835V2 - SN:484
Program Name: Verification Measurement on 835MHz with BTSL

Communication System: CW; Frequency: 835 MHz;Duty Cycle: 1:1
Medium parameters used: f = 835 MHz; σ = 1.02 mho/m; ε_r = 57.6; ρ = 1000 kg/m^3
Phantom section: Flat Section

DASY4 Configuration:
- Probe: ET3DV6 - SN1815; ConvF(6.51, 6.51, 6.51); Calibrated: 2006-01-20
- Sensor-Surface: 4mm (Mechanical Surface Detection)
- Electronics: DAE4 SN640; Calibrated: 2006-01-18
- Phantom: SAM 6; Type: SAM; Serial: 1351
- Measurement SW: DASY4, V4.6 Build 23; Postprocessing SW: SEMCAD, V1.8 Build 160

Flat, 15mm/Area Scan (61x61x1): Measurement grid: dx=15mm, dy=15mm
Maximum value of SAR (interpolated) = 1.09 mW/g

Flat, 15mm/Zoom Scan (5x5x7)/Cube 0: Measurement grid: dx=8mm, dy=8mm, dz=5mm
Reference Value = 33.8 V/m; Power Drift = -0.012 dB
Peak SAR (extrapolated) = 1.47 W/kg
SAR(1 g) = 1.01 mW/g; SAR(10 g) = 0.657 mW/g
Maximum value of SAR (measured) = 1.09 mW/g

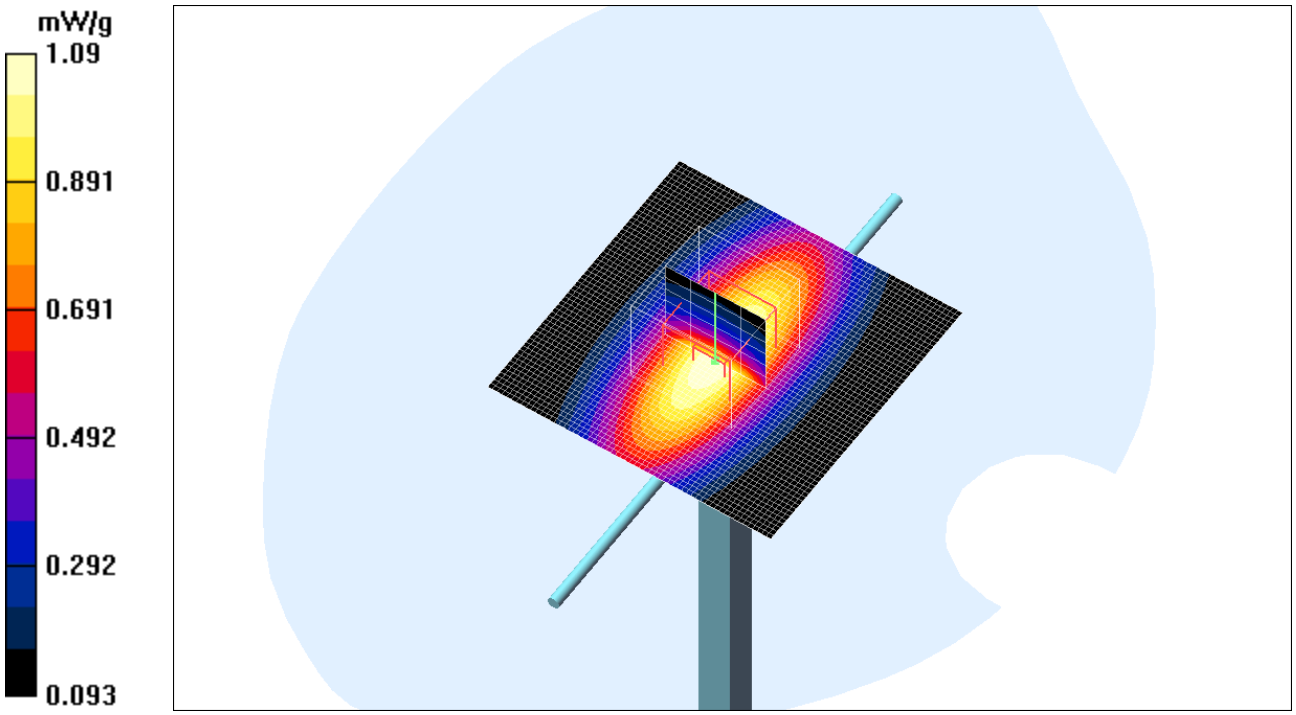

Date/Time: 2006-01-30 08:28:11

Test Laboratory: Sony Ericsson Mobile Communications
File Name: Verification Measurement 835MHz_060130_RP.da4

DUT: Dipole 835 MHz; Type: D835V2; Serial: D835V2 - SN:484

Program Name: Verification Measurement for 835MHz with HSL

Communication System: CW; Frequency: 835 MHz;Duty Cycle: 1:1
Medium parameters used: f = 835 MHz; σ = 0.88 mho/m; ε_r = 41.3; ρ = 1000 kg/m^3
Phantom section: Flat Section

DASY4 Configuration:
- Probe: ET3DV6 - SN1815; ConvF(6.82, 6.82, 6.82); Calibrated: 2006-01-20
- Sensor-Surface: 4mm (Mechanical Surface Detection)
- Electronics: DAE4 SN640; Calibrated: 2006-01-18
- Phantom: SAM 5; Type: SAM; Serial: 1352
- Measurement SW: DASY4, V4.6 Build 23; Postprocessing SW: SEMCAD, V1.8 Build 160

Flat, 15mm/Area Scan (91x91x1): Measurement grid: dx=10mm, dy=10mm
Maximum value of SAR (interpolated) = 1.01 mW/g

Flat, 15mm/Zoom Scan (5x5x7)/Cube 0: Measurement grid: dx=8mm, dy=8mm, dz=5mm
Reference Value = 33.5 V/m; Power Drift = -0.046 dB
Peak SAR (extrapolated) = 1.39 W/kg
SAR(1 g) = 0.932 mW/g; SAR(10 g) = 0.608 mW/g
Maximum value of SAR (measured) = 1.01 mW/g

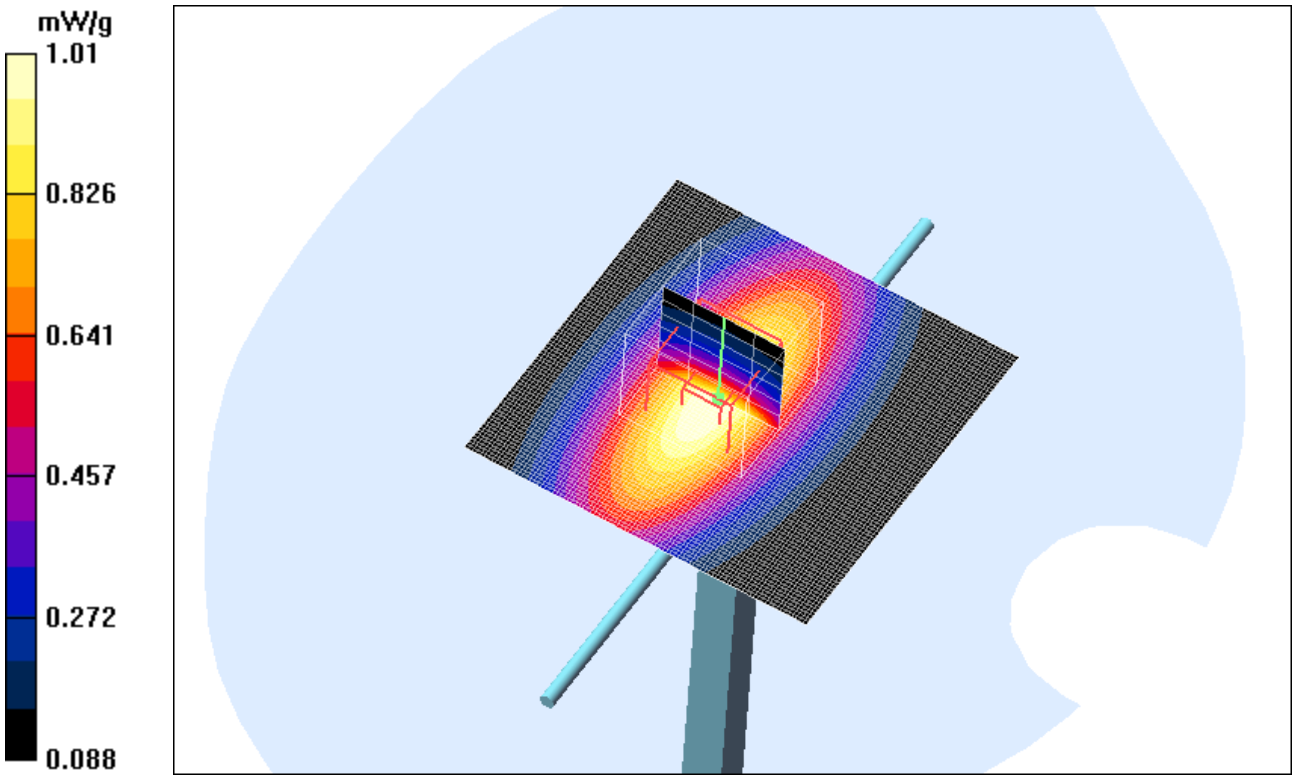

Date/Time: 2006-02-02 09:33:48

Test Laboratory: Sony Ericsson Mobile Communications
File Name: Verification Measurement 1900MHz_060202_RP.da4

DUT: Dipole 1900 MHz; Type: D1900V2; Serial: D1900V2 - SN:5d002
Program Name: Verification Measurement on 1900MHz with BTSL

Communication System: CW; Frequency: 1900 MHz;Duty Cycle: 1:1
Medium parameters used: f = 1900 MHz; σ = 1.55 mho/m; ε_r = 51.6; ρ = 1000 kg/m^3
Phantom section: Flat Section

DASY4 Configuration:
- Probe: ET3DV6 - SN1815; ConvF(4.6, 4.6, 4.6); Calibrated: 2006-01-20
- Sensor-Surface: 4mm (Mechanical Surface Detection)
- Electronics: DAE4 SN640; Calibrated: 2006-01-18
- Phantom: SAM 6; Type: SAM; Serial: 1351
- Measurement SW: DASY4, V4.6 Build 23; Postprocessing SW: SEMCAD, V1.8 Build 160

Flat, 10mm/Area Scan (71x71x1): Measurement grid: dx=10mm, dy=10mm
Maximum value of SAR (interpolated) = 4.68 mW/g

Flat, 10mm/Zoom Scan (5x5x7)/Cube 0: Measurement grid: dx=8mm, dy=8mm, dz=5mm
Reference Value = 57.4 V/m; Power Drift = -0.044 dB
Peak SAR (extrapolated) = 7.41 W/kg
SAR(1 g) = 4.1 mW/g; SAR(10 g) = 2.14 mW/g
Maximum value of SAR (measured) = 4.61 mW/g

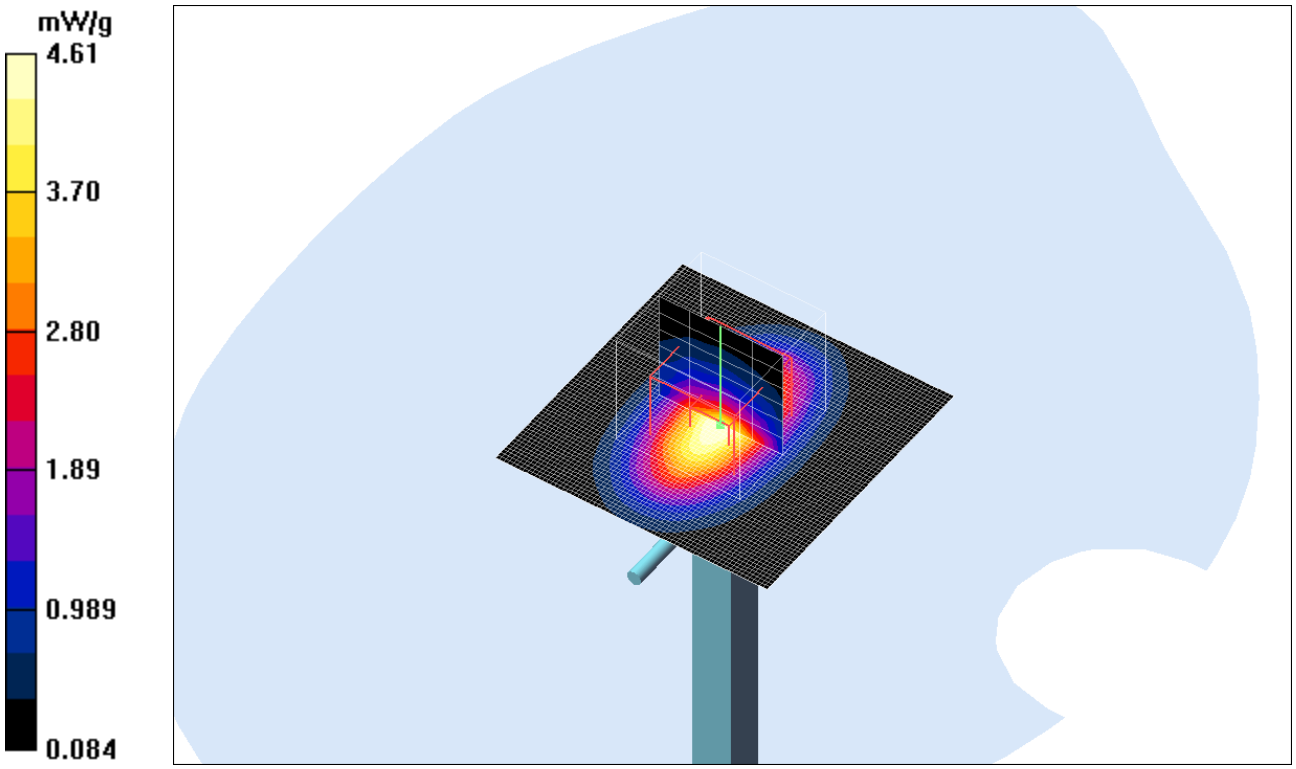

Date/Time: 2006-02-01 10:40:11

Test Laboratory: Sony Ericsson Mobile Communications
File Name: ch661_Right_Cheek_060201_RP.da4

DUT: PY7A1042012; Type: GSM Dual Band; Serial: #3993
Program Name: SAR Measurement on Head

Communication System: GSM 1900; Frequency: 1880 MHz;Duty Cycle: 1:8.3
Medium parameters used: f = 1880 MHz; σ = 1.45 mho/m; ε_r = 39.1; ρ = 1000 kg/m^3
Phantom section: Right Section

DASY4 Configuration:
- Probe: ET3DV6 - SN1815; ConvF(5.23, 5.23, 5.23); Calibrated: 2006-01-20
- Sensor-Surface: 4mm (Mechanical Surface Detection)
- Electronics: DAE4 SN640; Calibrated: 2006-01-18
- Phantom: SAM 6; Type: SAM; Serial: 1351
- Measurement SW: DASY4, V4.6 Build 23; Postprocessing SW: SEMCAD, V1.8 Build 160

Right, Cheek/Area Scan (61x121x1): Measurement grid: dx=10mm, dy=10mm
Maximum value of SAR (interpolated) = 0.329 mW/g

Right, Cheek/Zoom Scan (5x5x7)/Cube 0: Measurement grid: dx=8mm, dy=8mm, dz=5mm
Reference Value = 14.3 V/m; Power Drift = -0.005 dB
Peak SAR (extrapolated) = 0.497 W/kg
SAR(1 g) = 0.300 mW/g; SAR(10 g) = 0.179 mW/g
Maximum value of SAR (measured) = 0.324 mW/g

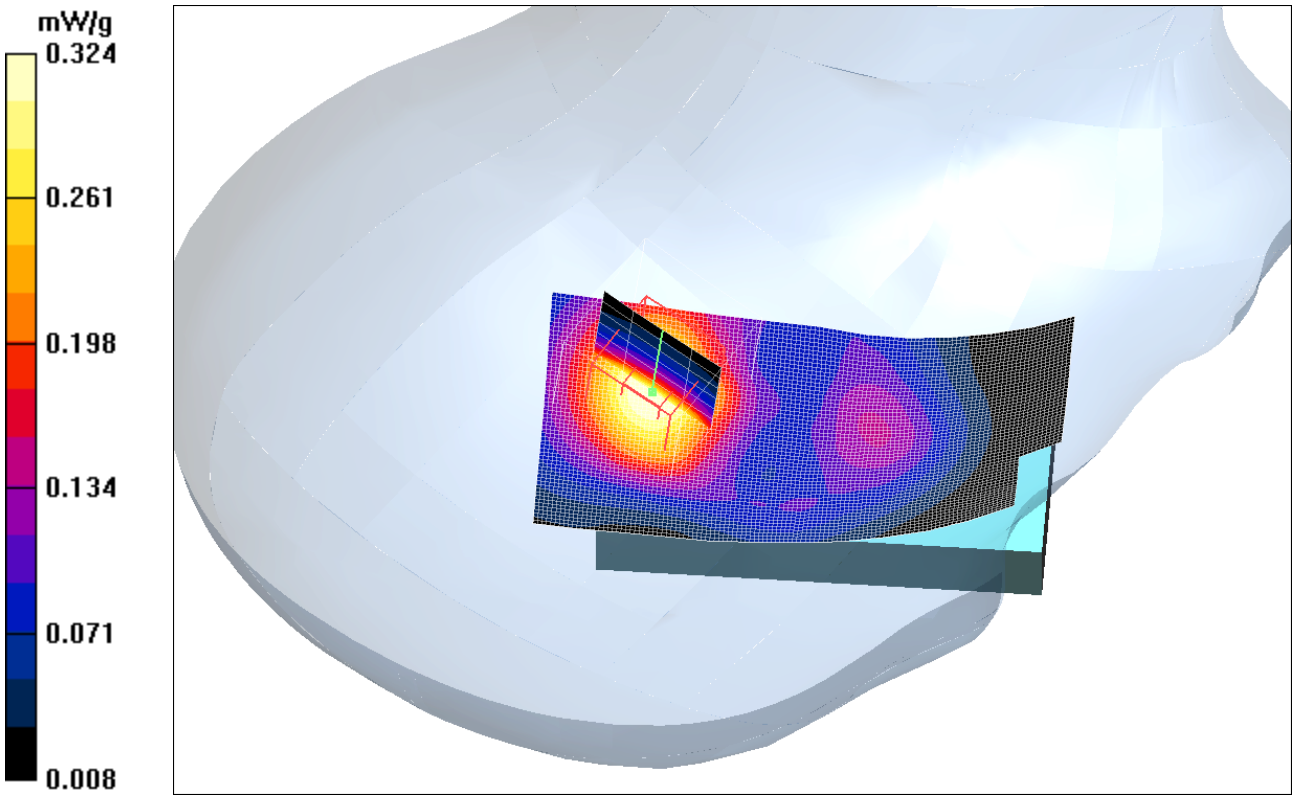

Date/Time: 2006-02-01 16:13:44

Test Laboratory: Sony Ericsson Mobile Communications
File Name: ch661_Left_Tilt_060201_RP.da4

DUT: PY7A1042012; Type: GSM Dual Band; Serial: #3993
Program Name: SAR Measurement on Head

Communication System: GSM 1900; Frequency: 1880 MHz;Duty Cycle: 1:8.3
Medium parameters used: f = 1880 MHz; σ = 1.45 mho/m; ε_r = 39.1; ρ = 1000 kg/m^3
Phantom section: Left Section

DASY4 Configuration:
- Probe: ET3DV6 - SN1815; ConvF(5.23, 5.23, 5.23); Calibrated: 2006-01-20
- Sensor-Surface: 4mm (Mechanical Surface Detection)
- Electronics: DAE4 SN640; Calibrated: 2006-01-18
- Phantom: SAM 6; Type: SAM; Serial: 1351
- Measurement SW: DASY4, V4.6 Build 23; Postprocessing SW: SEMCAD, V1.8 Build 160

Left, Tilt/Area Scan (61x121x1): Measurement grid: dx=10mm, dy=10mm
Maximum value of SAR (interpolated) = 0.529 mW/g

Left, Tilt/Zoom Scan (5x5x7)/Cube 0: Measurement grid: dx=8mm, dy=8mm, dz=5mm
Reference Value = 18.4 V/m; Power Drift = 0.009 dB
Peak SAR (extrapolated) = 0.832 W/kg
SAR(1 g) = 0.473 mW/g; SAR(10 g) = 0.267 mW/g
Maximum value of SAR (measured) = 0.520 mW/g

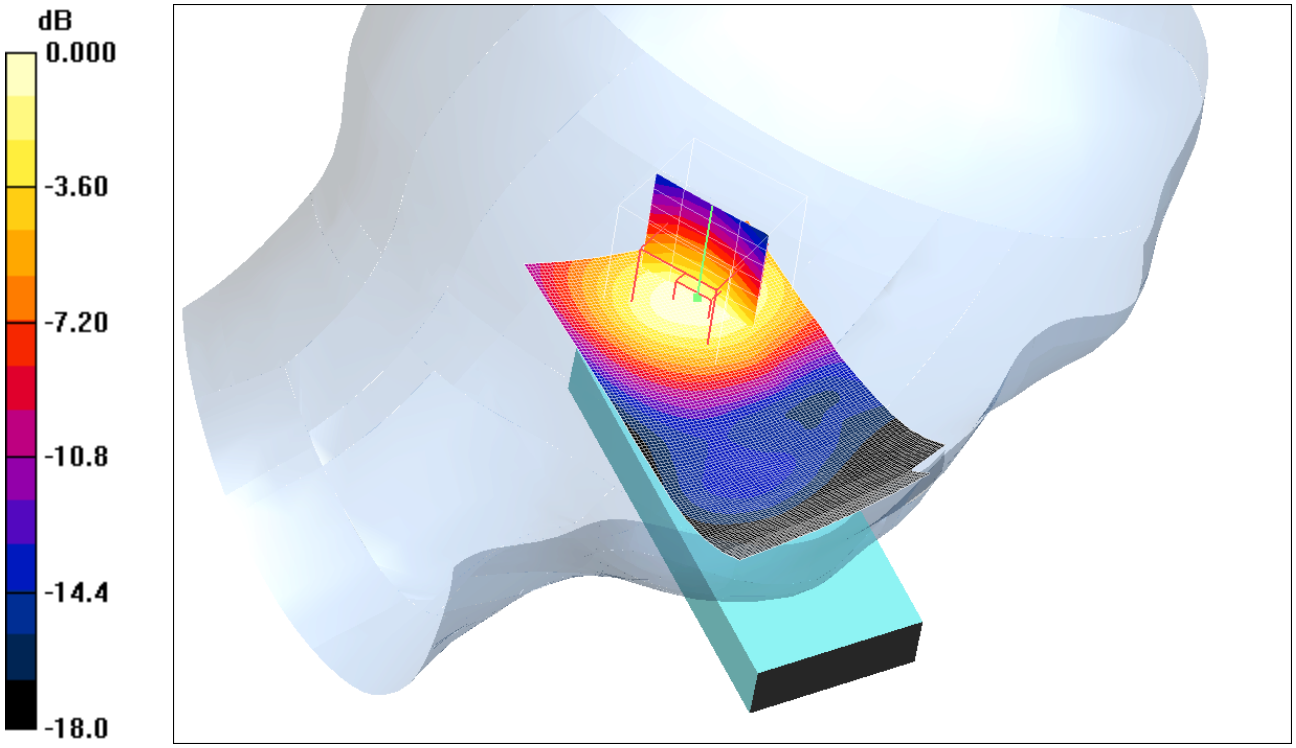

0 dB = 0.520mW/g

Date/Time: 2006-02-01 14:56:59

Test Laboratory: Sony Ericsson Mobile Communications
File Name: ch661_Left_Cheek_060201_RP.da4

DUT: PY7A1042012; Type: GSM Dual Band; Serial: #3993
Program Name: SAR Measurement on Head

Communication System: GSM 1900; Frequency: 1880 MHz;Duty Cycle: 1:8.3
Medium parameters used: f = 1880 MHz; σ = 1.45 mho/m; ε_r = 39.1; ρ = 1000 kg/m^3
Phantom section: Left Section

DASY4 Configuration:
- Probe: ET3DV6 - SN1815; ConvF(5.23, 5.23, 5.23); Calibrated: 2006-01-20
- Sensor-Surface: 4mm (Mechanical Surface Detection)Sensor-Surface: 0mm (Fix Surface)
- Electronics: DAE4 SN640; Calibrated: 2006-01-18
- Phantom: SAM 6; Type: SAM; Serial: 1351
- Measurement SW: DASY4, V4.6 Build 23; Postprocessing SW: SEMCAD, V1.8 Build 160

Left, Cheek/Area Scan (61x121x1): Measurement grid: dx=10mm, dy=10mm
Maximum value of SAR (interpolated) = 0.568 mW/g

Left, Cheek/Zoom Scan (5x5x7)/Cube 0: Measurement grid: dx=8mm, dy=8mm, dz=5mm
Reference Value = 17.0 V/m; Power Drift = 0.061 dB
Peak SAR (extrapolated) = 0.991 W/kg
SAR(1 g) = 0.513 mW/g; SAR(10 g) = 0.280 mW/g
Maximum value of SAR (measured) = 0.563 mW/g

Left, Cheek/Z Scan (1x1x16): Measurement grid: dx=20mm, dy=20mm, dz=20mm
Maximum value of SAR (interpolated) = 0.180 mW/g

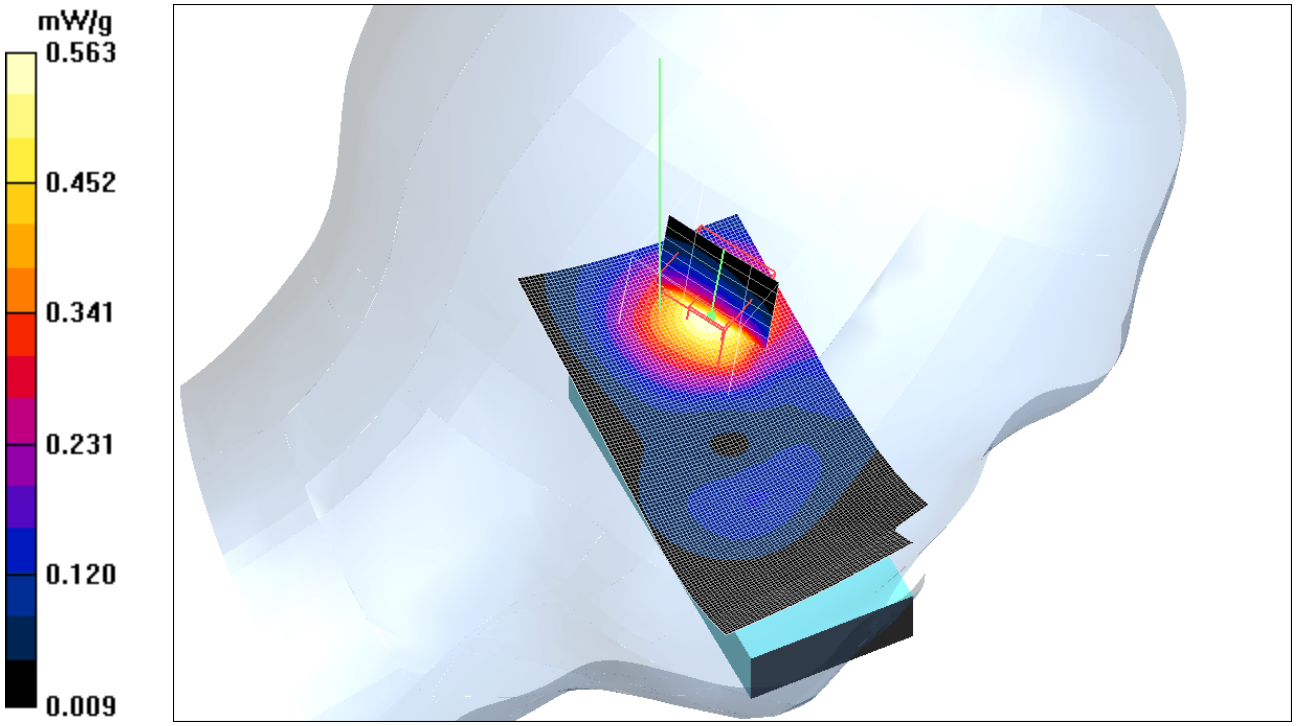

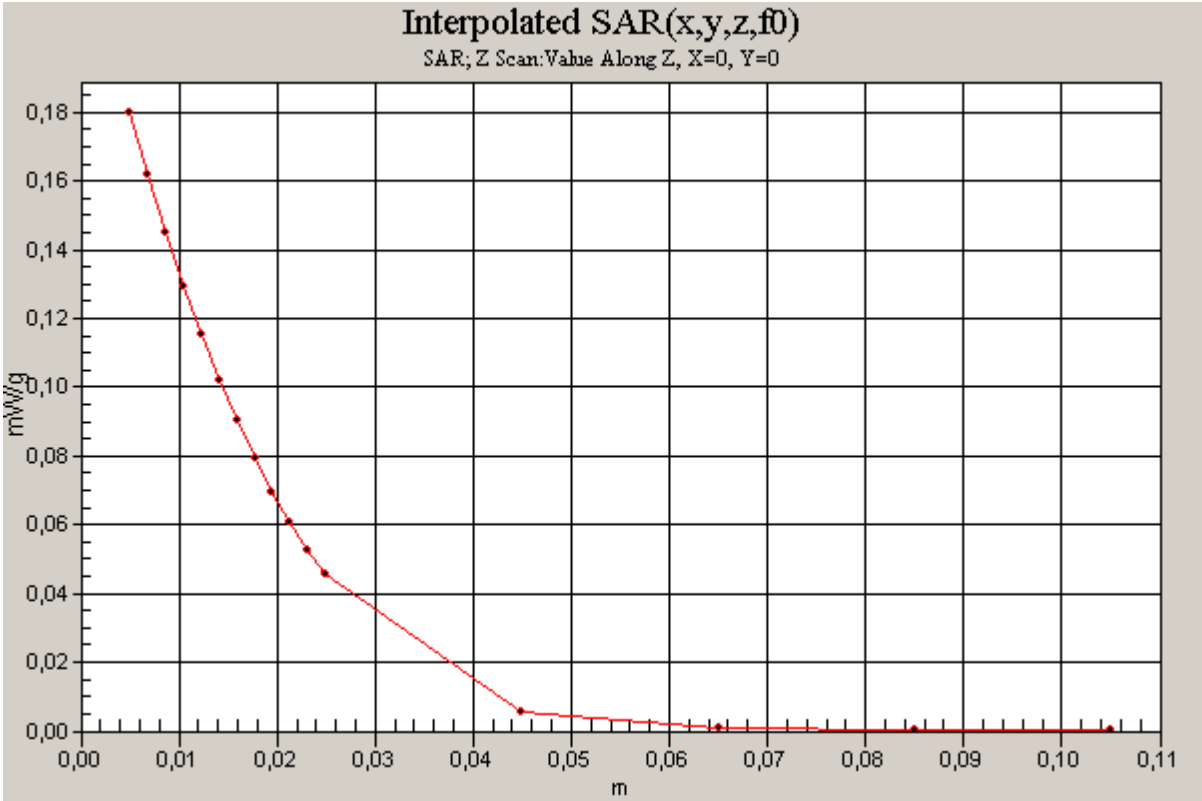
Interpolated SAR(x,y,z,f0)
SAR; Z Scan:Value Along Z, X=0, Y=0
mW/g
0,18
0,16
0,14
0,12
0,10
0,08
0,06
0,04
0,02
0,00
0,00
0,01
0,02
0,03
0,04
0,05
0,06
0,07
0,08
0,09
0,10
0,11
m

Date/Time: 2006-02-02 10:35:58

Test Laboratory: Sony Ericsson Mobile Communications
File Name: ch661_Flat_15mm_Speech_060202_RP.da4

DUT: PY7A1042012; Type: GSM Dual Band; Serial: #3993
Program Name: SAR Measurement on Head

Communication System: GSM 1900; Frequency: 1880 MHz;Duty Cycle: 1:8.3
Medium parameters used: f = 1880 MHz; σ = 1.54 mho/m; ε_r = 51.7; ρ = 1000 kg/m^3
Phantom section: Flat Section

DASY4 Configuration:
- Probe: ET3DV6 - SN1815; ConvF(4.6, 4.6, 4.6); Calibrated: 2006-01-20
- Sensor-Surface: 4mm (Mechanical Surface Detection)Sensor-Surface: 0mm (Fix Surface)
- Electronics: DAE4 SN640; Calibrated: 2006-01-18
- Phantom: SAM 6; Type: SAM; Serial: 1351
- Measurement SW: DASY4, V4.6 Build 23; Postprocessing SW: SEMCAD, V1.8 Build 160

Flat,15mm/Area Scan (61x121x1): Measurement grid: dx=10mm, dy=10mm
Maximum value of SAR (interpolated) = 1.26 mW/g

Flat,15mm/Zoom Scan (5x5x7)/Cube 0: Measurement grid: dx=8mm, dy=8mm, dz=5mm
Reference Value = 25.1 V/m; Power Drift = -0.066 dB
Peak SAR (extrapolated) = 2.06 W/kg
SAR(1 g) = 1.14 mW/g; SAR(10 g) = 0.631 mW/g
Maximum value of SAR (measured) = 1.25 mW/g

Flat,15mm/Z Scan (1x1x16): Measurement grid: dx=20mm, dy=20mm, dz=20mm
Maximum value of SAR (interpolated) = 0.290 mW/g

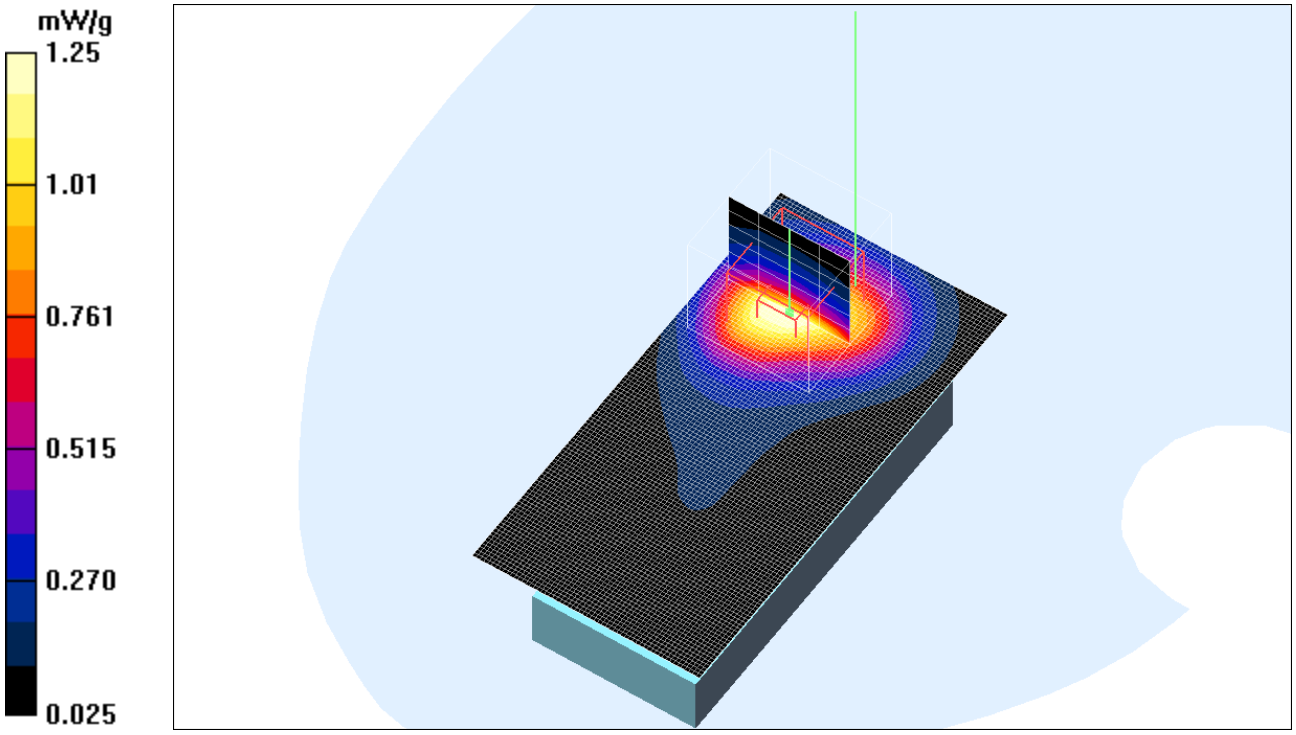

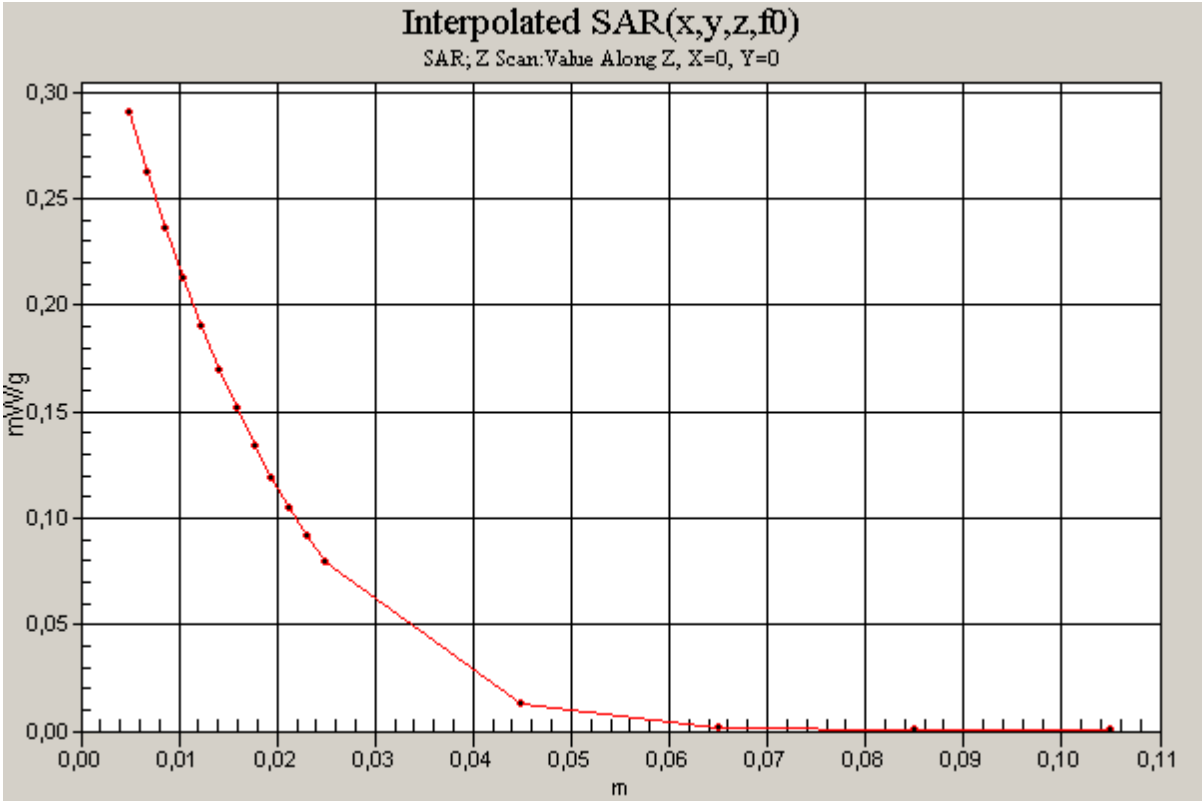
Interpolated SAR(x,y,z,f0)
SAR; Z Scan:Value Along Z, X=0, Y=0
mW/g
0,30
0,25
0,20
0,15
0,10
0,05
0,00
0,00
0,01
0,02
0,03
0,04
0,05
0,06
0,07
0,08
0,09
0,10
0,11
m

Date/Time: 2006-02-02 12:03:22

Test Laboratory: Sony Ericsson Mobile Communications
File Name: ch661_Flat_15mm_Data_060202_RP.da4

DUT: PY7A1042012; Type: GSM Dual Band; Serial: #3993
Program Name: SAR Measurement on Head

Communication System: GSM 1900; Frequency: 1880 MHz;Duty Cycle: 1:8.3
Medium parameters used: f = 1880 MHz; σ = 1.54 mho/m; ε_r = 51.7; ρ = 1000 kg/m^3
Phantom section: Flat Section

DASY4 Configuration:
- Probe: ET3DV6 - SN1815; ConvF(4.6, 4.6, 4.6); Calibrated: 2006-01-20
- Sensor-Surface: 4mm (Mechanical Surface Detection)
- Electronics: DAE4 SN640; Calibrated: 2006-01-18
- Phantom: SAM 6; Type: SAM; Serial: 1351
- Measurement SW: DASY4, V4.6 Build 23; Postprocessing SW: SEMCAD, V1.8 Build 160

Flat,15mm/Area Scan (61x121x1): Measurement grid: dx=10mm, dy=10mm
Maximum value of SAR (interpolated) = 1.15 mW/g

Flat,15mm/Zoom Scan (5x5x7)/Cube 0: Measurement grid: dx=8mm, dy=8mm, dz=5mm
Reference Value = 25.6 V/m; Power Drift = -0.013 dB
Peak SAR (extrapolated) = 1.85 W/kg
SAR(1 g) = 1.04 mW/g; SAR(10 g) = 0.582 mW/g
Maximum value of SAR (measured) = 1.14 mW/g

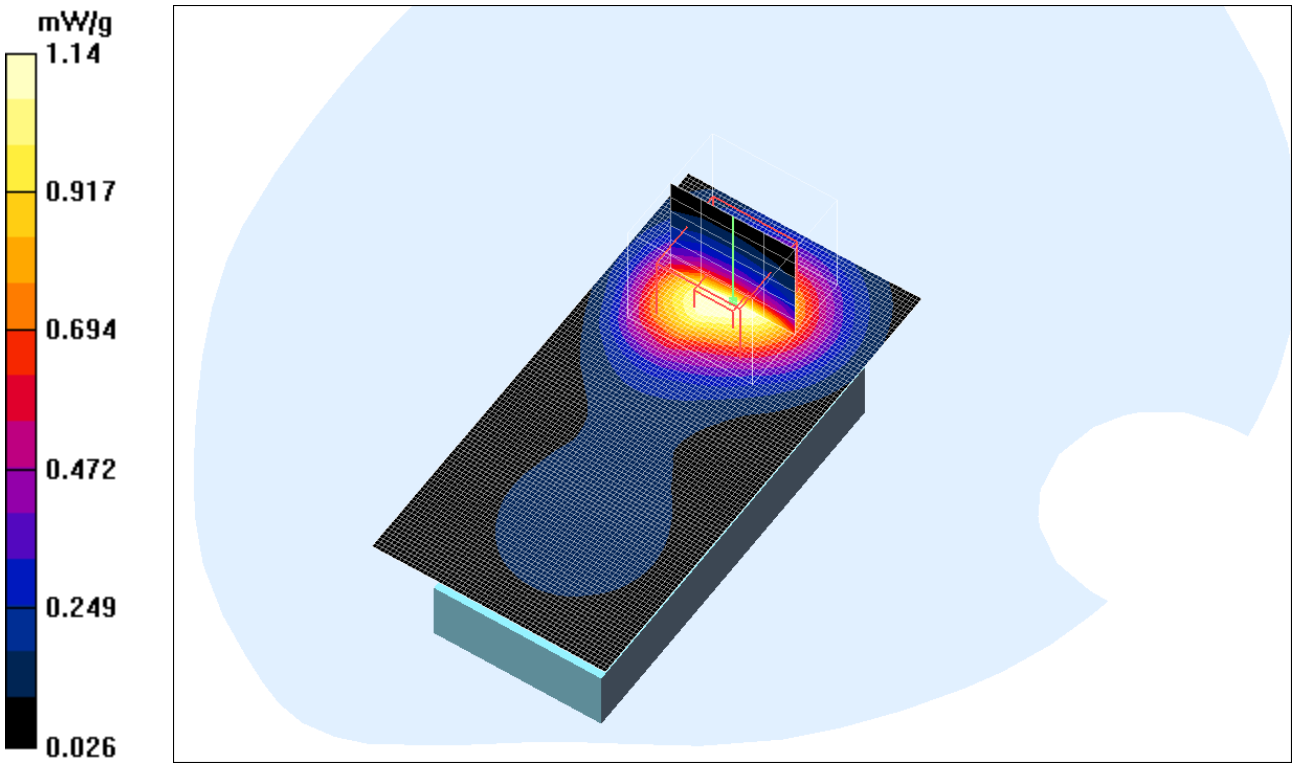

Date/Time: 2006-01-30 10:49:15

Test Laboratory: Sony Ericsson Mobile Communications
File Name: ch189_Right_Tilt_060130_RP.da4

DUT: PY7A1042012; Type: GSM Dual Band; Serial: #3993
Program Name: SAR Measurement on Head

Communication System: GSM835MHz; Frequency: 836.4 MHz;Duty Cycle: 1:8.3
Medium parameters used: f = 836.4 MHz; σ = 0.88 mho/m; ε_r = 41.3; ρ = 1000 kg/m^3
Phantom section: Right Section

DASY4 Configuration:
- Probe: ET3DV6 - SN1815; ConvF(6.82, 6.82, 6.82); Calibrated: 2006-01-20
- Sensor-Surface: 4mm (Mechanical Surface Detection)
- Electronics: DAE4 SN640; Calibrated: 2006-01-18
- Phantom: SAM 5; Type: SAM; Serial: 1352
- Measurement SW: DASY4, V4.6 Build 23; Postprocessing SW: SEMCAD, V1.8 Build 160

Right, Tilt/Area Scan (61x121x1): Measurement grid: dx=10mm, dy=10mm
Maximum value of SAR (interpolated) = 0.830 mW/g

Right, Tilt/Zoom Scan (5x5x7)/Cube 0: Measurement grid: dx=8mm, dy=8mm, dz=5mm
Reference Value = 28.9 V/m; Power Drift = -0.016 dB
Peak SAR (extrapolated) = 1.03 W/kg
SAR(1 g) = 0.779 mW/g; SAR(10 g) = 0.549 mW/g
Maximum value of SAR (measured) = 0.830 mW/g

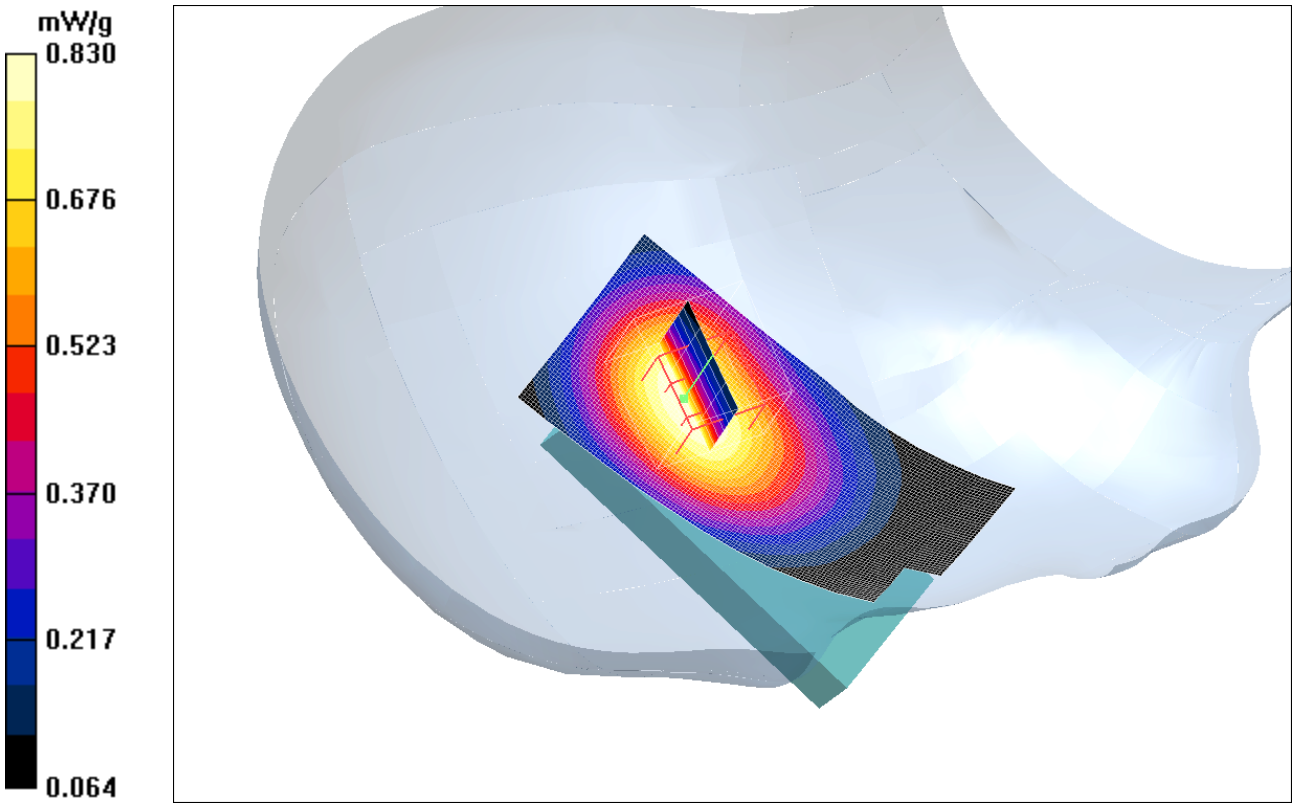

Date/Time: 2006-01-30 09:49:15

Test Laboratory: Sony Ericsson Mobile Communications
File Name: ch189_Right_Cheek_060130_RP.da4

DUT: PY7A1042012; Type: GSM Dual Band; Serial: #3993
Program Name: SAR Measurement on Head

Communication System: GSM835MHz; Frequency: 836.4 MHz;Duty Cycle: 1:8.3
Medium parameters used: f = 836.4 MHz; σ = 0.88 mho/m; ε_r = 41.3; ρ = 1000 kg/m^3
Phantom section: Right Section

DASY4 Configuration:
- Probe: ET3DV6 - SN1815; ConvF(6.82, 6.82, 6.82); Calibrated: 2006-01-20
- Sensor-Surface: 4mm (Mechanical Surface Detection)Sensor-Surface: 0mm (Fix Surface)
- Electronics: DAE4 SN640; Calibrated: 2006-01-18
- Phantom: SAM 5; Type: SAM; Serial: 1352
- Measurement SW: DASY4, V4.6 Build 23; Postprocessing SW: SEMCAD, V1.8 Build 160

Right, Cheek/Area Scan (61x121x1): Measurement grid: dx=10mm, dy=10mm
Maximum value of SAR (interpolated) = 1.33 mW/g

Right, Cheek/Zoom Scan (5x5x7)/Cube 0: Measurement grid: dx=8mm, dy=8mm, dz=5mm
Reference Value = 32.4 V/m; Power Drift = 0.051 dB
Peak SAR (extrapolated) = 1.68 W/kg
SAR(1 g) = 1.27 mW/g; SAR(10 g) = 0.889 mW/g
Maximum value of SAR (measured) = 1.35 mW/g

Right, Cheek/Z Scan (1x1x16): Measurement grid: dx=20mm, dy=20mm, dz=20mm
Maximum value of SAR (interpolated) = 0.549 mW/g

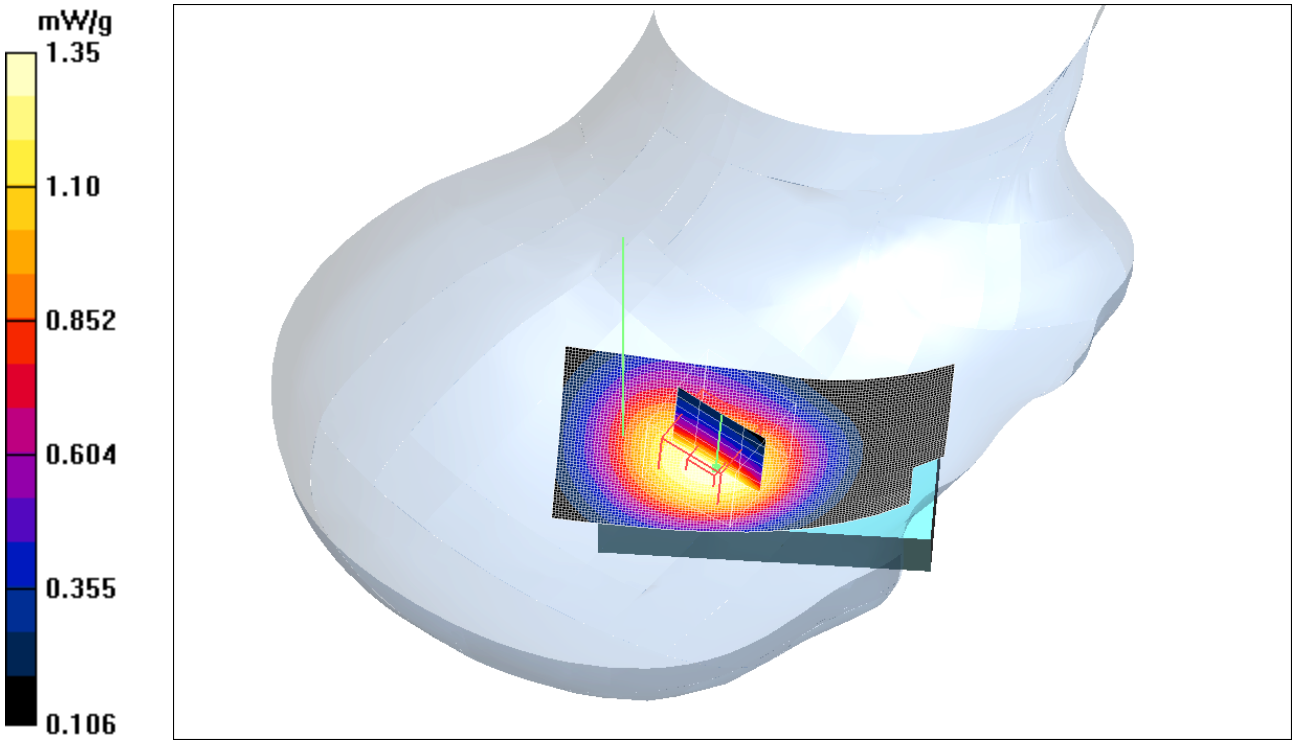

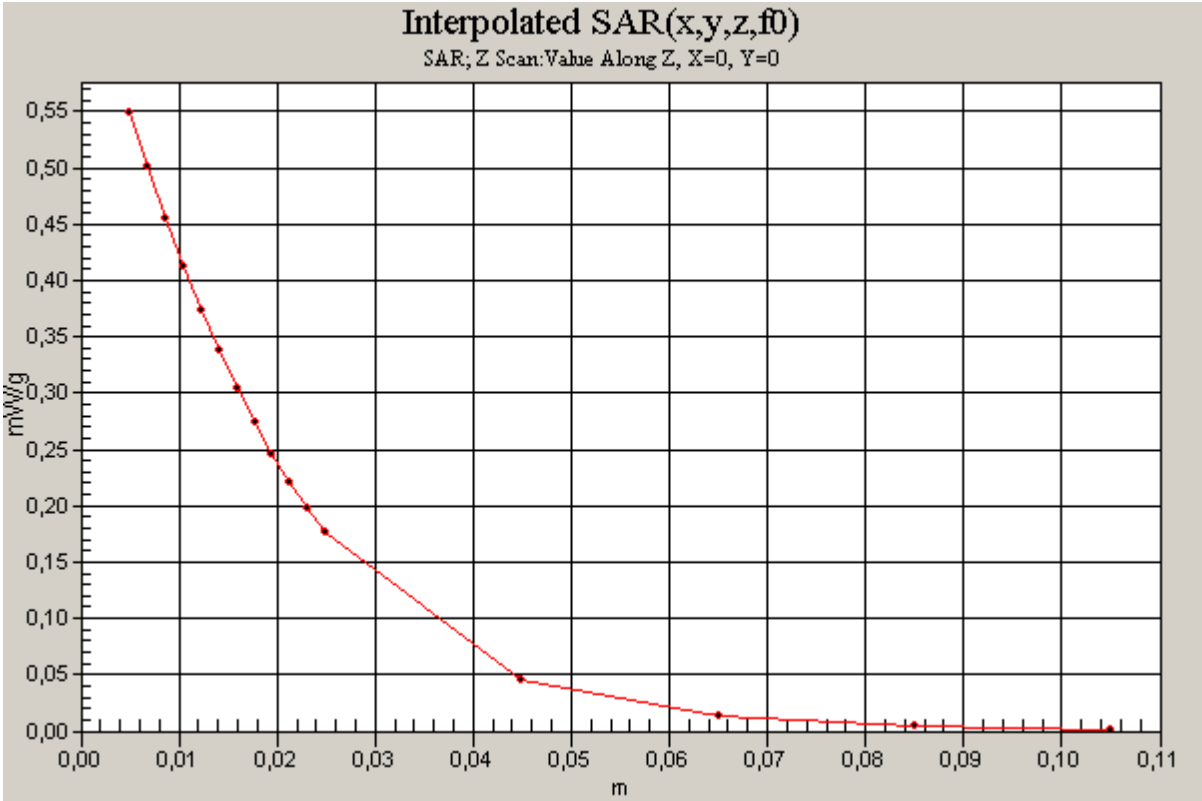
Interpolated SAR(x,y,z,f0)
SAR; Z Scan:Value Along Z, X=0, Y=0
mW/g
0,55
0,50
0,45
0,40
0,35
0,30
0,25
0,20
0,15
0,10
0,05
0,00
0,00
0,01
0,02
0,03
0,04
0,05
0,06
0,07
0,08
0,09
0,10
0,11
m

Date/Time: 2006-01-30 13:26:44

Test Laboratory: Sony Ericsson Mobile Communications
File Name: ch189_Left_Tilt_060130_RP.da4

DUT: PY7A1042012; Type: GSM Dual Band; Serial: #3993
Program Name: SAR Measurement on Head

Communication System: GSM835MHz; Frequency: 836.4 MHz;Duty Cycle: 1:8.3
Medium parameters used: f = 836.4 MHz; σ = 0.88 mho/m; ε_r = 41.3; ρ = 1000 kg/m^3
Phantom section: Left Section

DASY4 Configuration:
- Probe: ET3DV6 - SN1815; ConvF(6.82, 6.82, 6.82); Calibrated: 2006-01-20
- Sensor-Surface: 4mm (Mechanical Surface Detection)
- Electronics: DAE4 SN640; Calibrated: 2006-01-18
- Phantom: SAM 5; Type: SAM; Serial: 1352
- Measurement SW: DASY4, V4.6 Build 23; Postprocessing SW: SEMCAD, V1.8 Build 160

Left, Tilt/Area Scan (61x121x1): Measurement grid: dx=10mm, dy=10mm
Maximum value of SAR (interpolated) = 0.951 mW/g

Left, Tilt/Zoom Scan (5x5x7)/Cube 0: Measurement grid: dx=8mm, dy=8mm, dz=5mm
Reference Value = 28.6 V/m; Power Drift = 0.092 dB
Peak SAR (extrapolated) = 1.25 W/kg
SAR(1 g) = 0.867 mW/g; SAR(10 g) = 0.585 mW/g
Maximum value of SAR (measured) = 0.932 mW/g

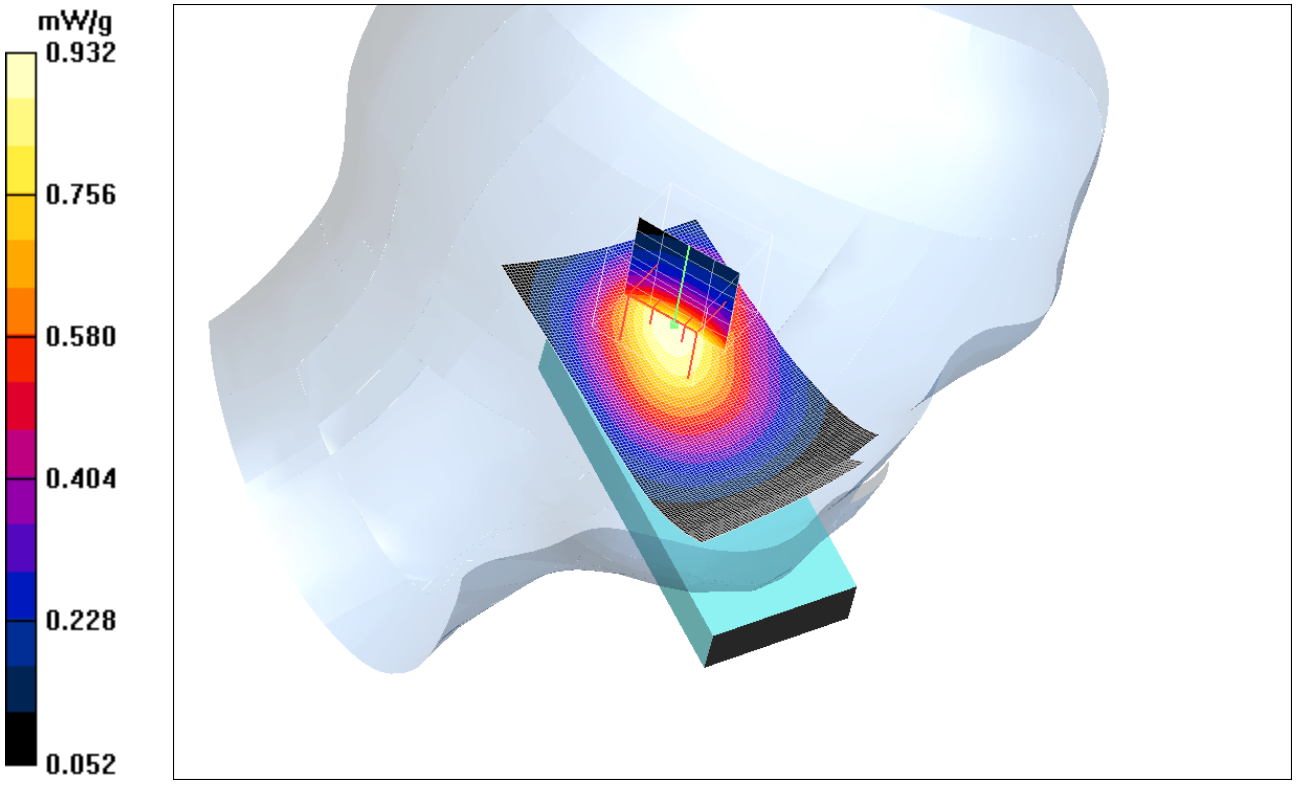

Date/Time: 2006-01-30 12:16:04

Test Laboratory: Sony Ericsson Mobile Communications
File Name: ch189_Left_Cheek_060130_RP.da4

DUT: PY7A1042012; Type: GSM Dual Band; Serial: #3993
Program Name: SAR Measurement on Head

Communication System: GSM835MHz; Frequency: 836.4 MHz;Duty Cycle: 1:8.3
Medium parameters used: f = 836.4 MHz; σ = 0.88 mho/m; ε_r = 41.3; ρ = 1000 kg/m^3
Phantom section: Left Section

DASY4 Configuration:
- Probe: ET3DV6 - SN1815; ConvF(6.82, 6.82, 6.82); Calibrated: 2006-01-20
- Sensor-Surface: 4mm (Mechanical Surface Detection)
- Electronics: DAE4 SN640; Calibrated: 2006-01-18
- Phantom: SAM 5; Type: SAM; Serial: 1352
- Measurement SW: DASY4, V4.6 Build 23; Postprocessing SW: SEMCAD, V1.8 Build 160

Left, Cheek/Area Scan (61x121x1): Measurement grid: dx=10mm, dy=10mm
Maximum value of SAR (interpolated) = 1.33 mW/g

Left, Cheek/Zoom Scan (5x5x7)/Cube 0: Measurement grid: dx=8mm, dy=8mm, dz=5mm
Reference Value = 31.8 V/m; Power Drift = 0.023 dB
Peak SAR (extrapolated) = 1.72 W/kg
SAR(1 g) = 1.26 mW/g; SAR(10 g) = 0.871 mW/g
Maximum value of SAR (measured) = 1.33 mW/g

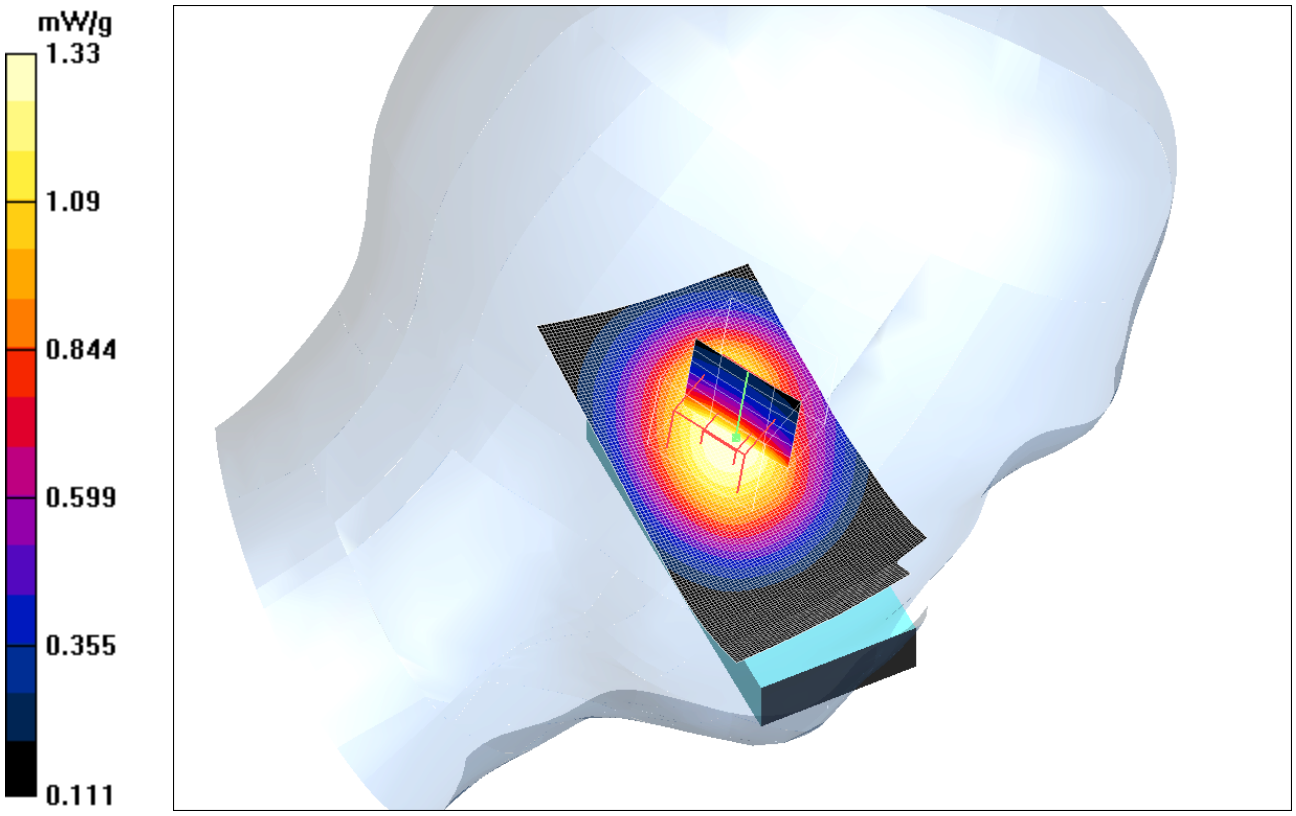

Date/Time: 2006-02-03 12:07:46

Test Laboratory: Sony Ericsson Mobile Communications
File Name: ch128_Flat_15mm_Speech_060203_RP.da4

DUT: PY7A1042012; Type: GSM Dual Band; Serial: #3993
Program Name: SAR Measurement on Head

Communication System: GSM835MHz; Frequency: 824.2 MHz;Duty Cycle: 1:8.3
Medium parameters used: f = 824.2 MHz; σ = 1.01 mho/m; ε_r = 57.7; ρ = 1000 kg/m^3
Phantom section: Flat Section

DASY4 Configuration:
- Probe: ET3DV6 - SN1815; ConvF(6.51, 6.51, 6.51); Calibrated: 2006-01-20
- Sensor-Surface: 4mm (Mechanical Surface Detection)
- Electronics: DAE4 SN640; Calibrated: 2006-01-18
- Phantom: SAM 6; Type: SAM; Serial: 1351
- Measurement SW: DASY4, V4.6 Build 23; Postprocessing SW: SEMCAD, V1.8 Build 160

Flat,15mm/Area Scan (61x121x1): Measurement grid: dx=10mm, dy=10mm
Maximum value of SAR (interpolated) = 0.720 mW/g

Flat,15mm/Zoom Scan (5x5x7)/Cube 0: Measurement grid: dx=8mm, dy=8mm, dz=5mm
Reference Value = 12.5 V/m; Power Drift = -0.063 dB
Peak SAR (extrapolated) = 0.896 W/kg
SAR(1 g) = 0.671 mW/g; SAR(10 g) = 0.470 mW/g
Maximum value of SAR (measured) = 0.714 mW/g

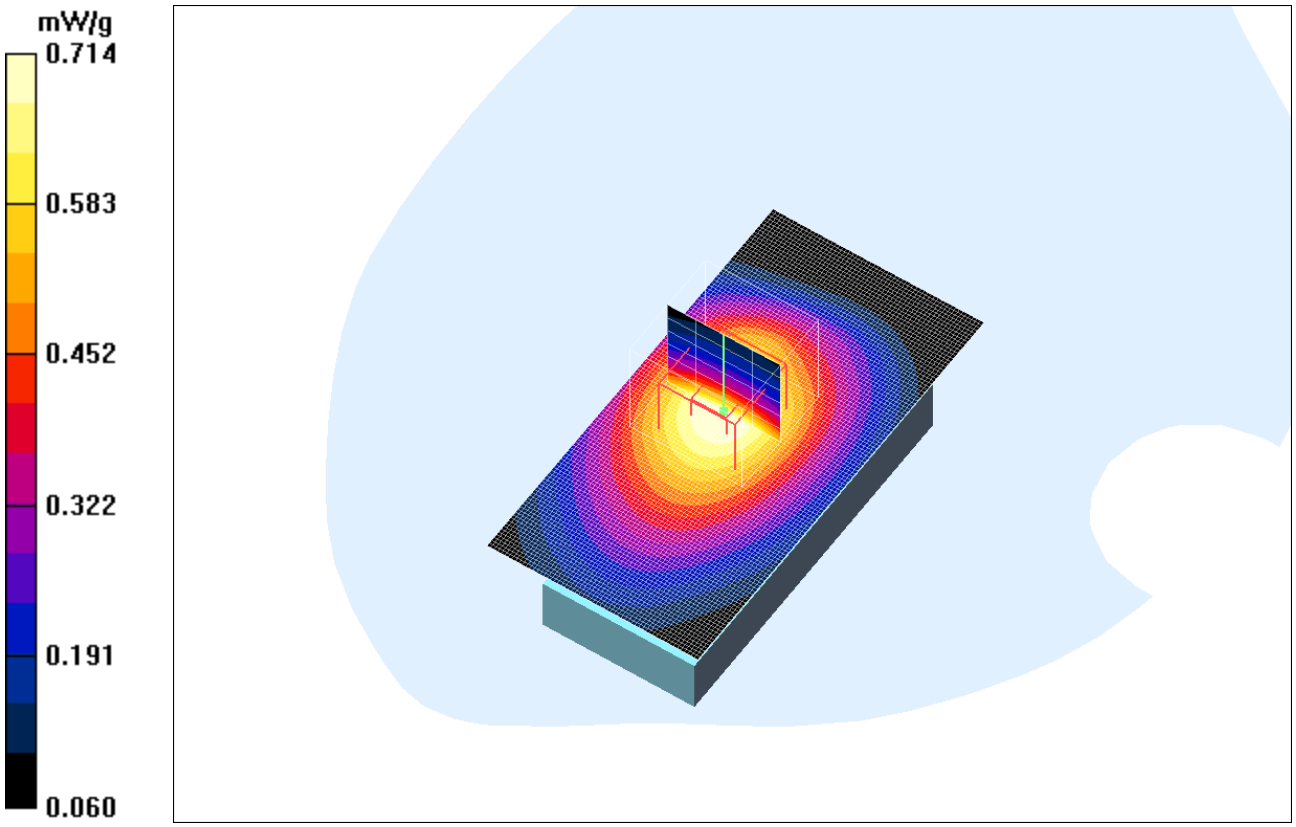

Date/Time: 2006-02-03 10:31:23

Test Laboratory: Sony Ericsson Mobile Communications
File Name: ch128_Flat_15mm_Data_060203_RP.da4

DUT: PY7A1042012; Type: GSM Dual Band; Serial: #3993
Program Name: SAR Measurement on Head

Communication System: GSM835MHz; Frequency: 824.2 MHz;Duty Cycle: 1:8.3
Medium parameters used: f = 824.2 MHz; σ = 1.01 mho/m; ε_r = 57.7; ρ = 1000 kg/m^3
Phantom section: Flat Section

DASY4 Configuration:
- Probe: ET3DV6 - SN1815; ConvF(6.51, 6.51, 6.51); Calibrated: 2006-01-20
- Sensor-Surface: 4mm (Mechanical Surface Detection)Sensor-Surface: 0mm (Fix Surface)
- Electronics: DAE4 SN640; Calibrated: 2006-01-18
- Phantom: SAM 6; Type: SAM; Serial: 1351
- Measurement SW: DASY4, V4.6 Build 23; Postprocessing SW: SEMCAD, V1.8 Build 160

Flat,15mm/Area Scan (61x121x1): Measurement grid: dx=10mm, dy=10mm
Maximum value of SAR (interpolated) = 1.34 mW/g

Flat,15mm/Zoom Scan (5x5x7)/Cube 0: Measurement grid: dx=8mm, dy=8mm, dz=5mm
Reference Value = 17.6 V/m; Power Drift = 0.050 dB
Peak SAR (extrapolated) = 1.67 W/kg
SAR(1 g) = 1.25 mW/g; SAR(10 g) = 0.870 mW/g
Maximum value of SAR (measured) = 1.34 mW/g

Flat,15mm/Z Scan (1x1x16): Measurement grid: dx=20mm, dy=20mm, dz=20mm
Maximum value of SAR (interpolated) = 0.156 mW/g

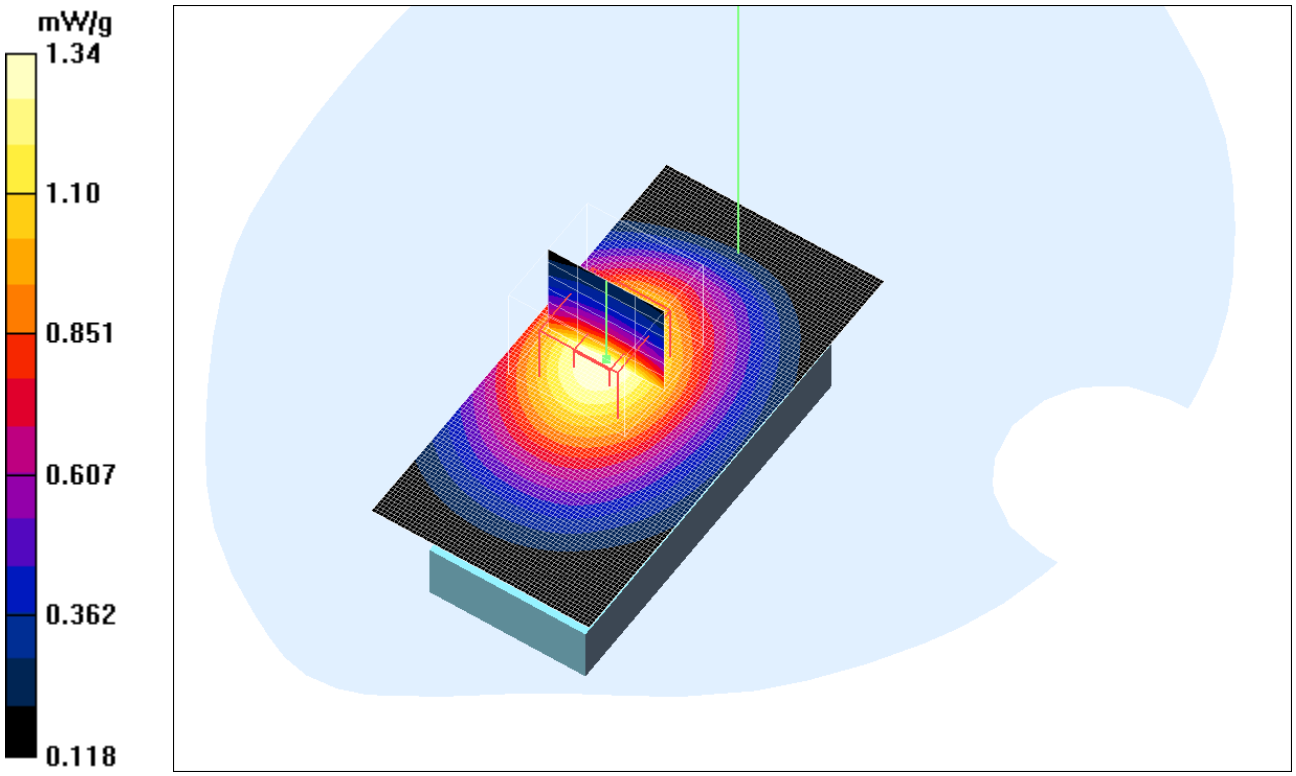

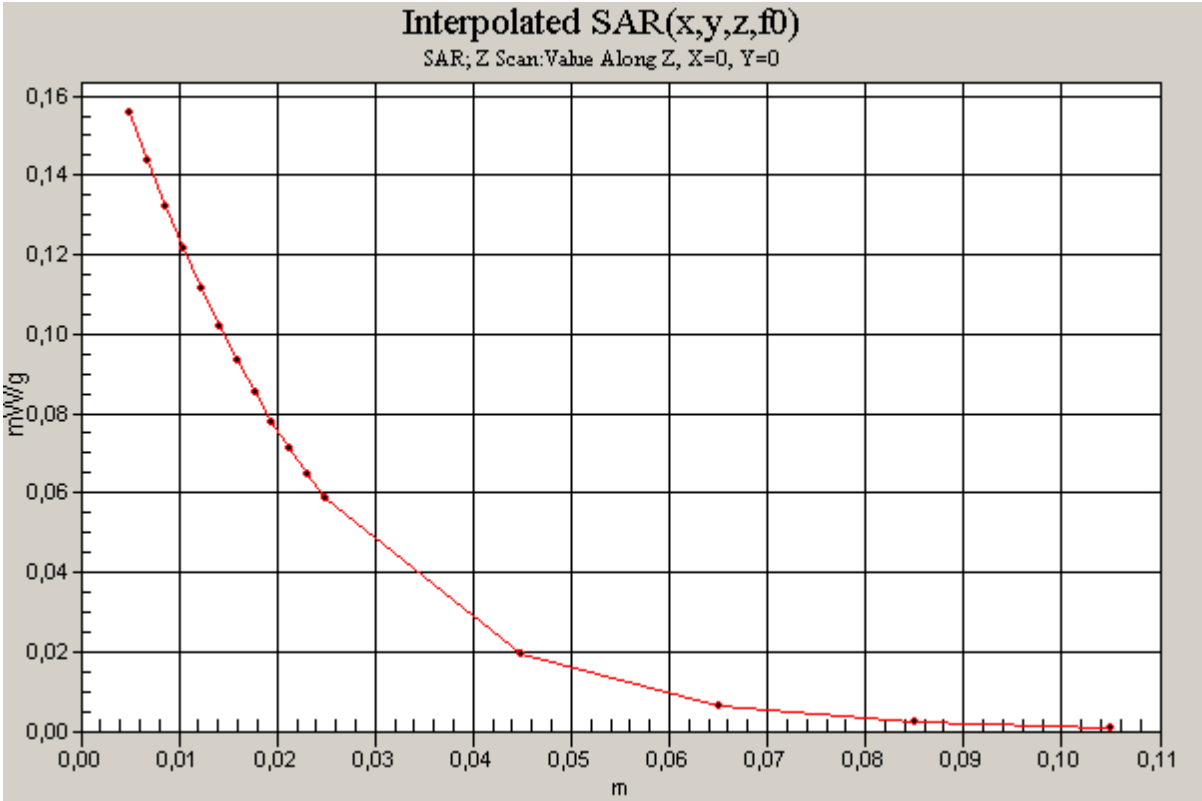
Interpolated SAR(x,y,z,f0)
SAR; Z Scan:Value Along Z, X=0, Y=0
mW/g
0,16
0,14
0,12
0,10
0,08
0,06
0,04
0,02
0,00
0,00
0,01
0,02
0,03
0,04
0,05
0,06
0,07
0,08
0,09
0,10
0,11
m

Date/Time: 2006-02-01 12:56:53

Test Laboratory: Sony Ericsson Mobile Communications
File Name: ch661_Right_Tilt_060201_RP.da4

DUT: PY7A1042012; Type: GSM Dual Band; Serial: #3993
Program Name: SAR Measurement on Head

Communication System: GSM 1900; Frequency: 1880 MHz;Duty Cycle: 1:8.3
Medium parameters used: f = 1880 MHz; σ = 1.45 mho/m; ε_r = 39.1; ρ = 1000 kg/m^3
Phantom section: Right Section

DASY4 Configuration:
- Probe: ET3DV6 - SN1815; ConvF(5.23, 5.23, 5.23); Calibrated: 2006-01-20
- Sensor-Surface: 4mm (Mechanical Surface Detection)
- Electronics: DAE4 SN640; Calibrated: 2006-01-18
- Phantom: SAM 6; Type: SAM; Serial: 1351
- Measurement SW: DASY4, V4.6 Build 23; Postprocessing SW: SEMCAD, V1.8 Build 160

Right, Tilt/Area Scan (61x121x1): Measurement grid: dx=10mm, dy=10mm
Maximum value of SAR (interpolated) = 0.356 mW/g
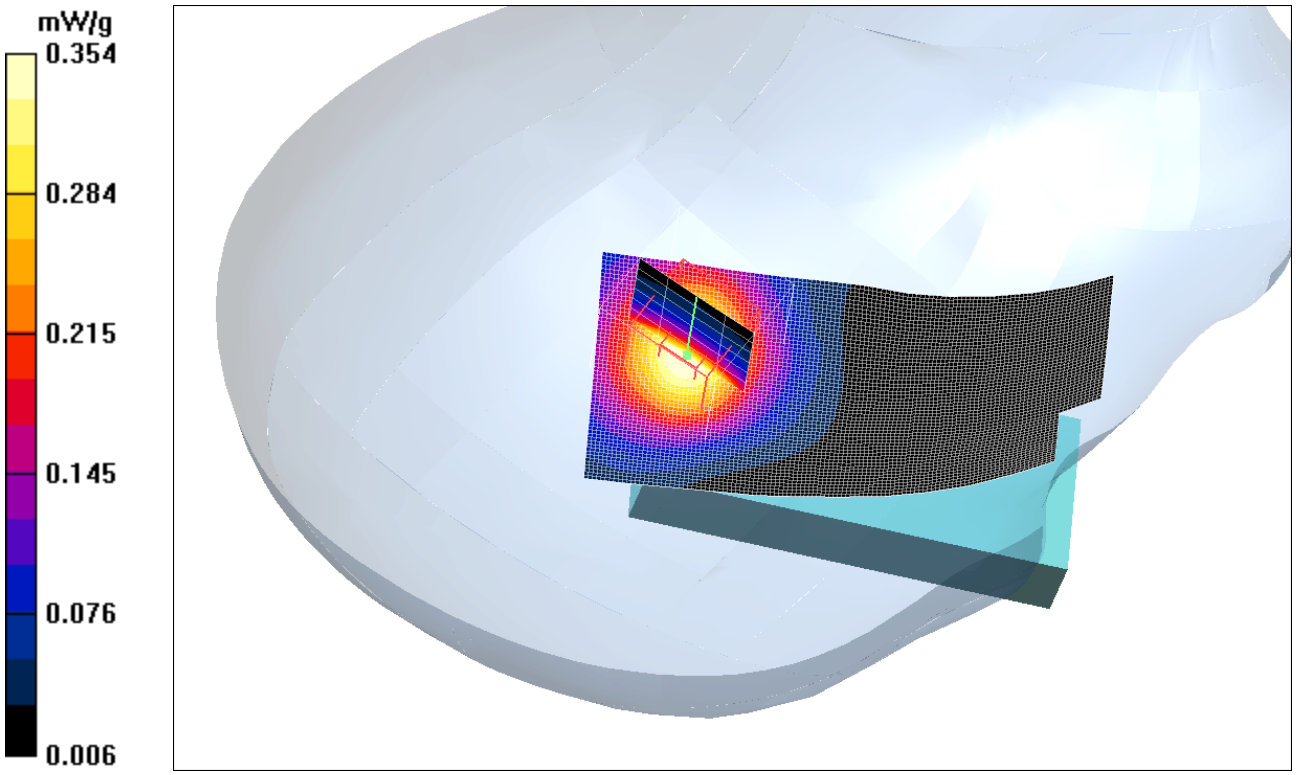
Right, Tilt/Zoom Scan (5x5x7)/Cube 0: Measurement grid: dx=8mm, dy=8mm, dz=5mm
Reference Value = 15.3 V/m; Power Drift = -0.028 dB
Peak SAR (extrapolated) = 0.549 W/kg
SAR(1 g) = 0.325 mW/g; SAR(10 g) = 0.189 mW/g
Maximum value of SAR (measured) = 0.354 mW/g