Sony Ericsson

Company Internal
REPORT

Prepared (also subject responsible if other)		No.		
LD/SEMC/CVVBALE Kent Lorentzon		*CVVA10:213*		
Approved	Checked	Date	Rev	Reference
BA/SEMC/CVVBAU Jon Kenny	JK	*100518*	A	File

Report issued by Accredited SAR Laboratory

for

FCC ID: PY7A3880071

IC: 4170B-A3880071

Date of test: 2010-04-27 to 2010-05-04

Laboratory:
Sony Ericsson SAR Test Laboratory
Sony Ericsson Mobile Communications AB
Nya Vattentornet
SE-221 88 Lund, Sweden

Testing Engineer:
Kent Lorentzon
Kent.Lorentzon@sonyericsson.com
+46 10 80 19043

Testing Approval:
Jon Kenny
Jon.Kenny@sonyericsson.com
+44 1252 55 5711

Statement of Compliance

Sony Ericsson Mobile Communications AB declares under its sole responsibility that the product

Sony Ericsson Type AAD-3880071-BV; FCC ID PY7A3880071; IC 4170B-A3880071

to which this declaration relates, is in conformity with the appropriate RF exposure standards recommendations and guidelines. It also declares that the product was tested in accordance with the appropriate measurement standards, guidelines and recommended practices. Any deviations from these standards, guidelines and recommended practices are noted below:

(None)

This laboratory is accredited to ISO/IEC 17025 (SWEDAC accreditation no. 1847).

SWEDAC ACKREDITERING 1847 ISO/IEC 17025

Laboratories are accredited by the Swedish Board for Accreditation and Conformity Assessment (SWEDAC) under the terms of Swedish legislation. The accredited laboratory activities meet the requirements in SS-EN ISO/IEC 17025 (2005). This report may not be reproduced other than in full, except with the prior written approval of the issuing laboratory.
The results and statements contained herein relate only to the items tested. The names of individuals involved may be mentioned only in connection with the statements or results from this report.

Sony Ericsson encourages all feedback, both positive and negative, on this report.
© Sony Ericsson Mobile Communication AB, 2010

Sony Ericsson

Company Internal
REPORT

Prepared (also subject responsible if other)		No.		
LD/SEMC/CVVBALE Kent Lorentzon		*CVVA10:213*		
Approved	Checked	Date	Rev	Reference
BA/SEMC/CVVBAU Jon Kenny	JK	*100518*	A	File

Table of contents

1 INTRODUCTION 3

2 CUSTOMER DETAILS 3

3 DEVICE UNDER TEST 3

3.1 ANTENNA DESCRIPTION 3
3.2 DEVICE DESCRIPTION 4
3.3 HSPA POWER CHARACTERISTICS 6

4 TEST EQUIPMENT 8

4.1 DOSIMETRIC SYSTEM 8
4.2 ADDITIONAL EQUIPMENT 8

5 ELECTRICAL PARAMETERS ON THE TISSUE SIMULATING LIQUID 9

6 SYSTEM ACCURACY VERIFICATION 10

7 SAR MEASUREMENT UNCERTAINTY 11

8 TEST RESULTS 12

9 REFERENCES 15

APPENDIX 16

9.1 PHOTOGRAPHS OF THE DEVICE UNDER TEST 16
9.2 DEVICE POSITION AT SAM TWIN PHANTOM 17
9.3 ATTACHMENTS 19

1 Introduction

In this test report, compliance of the Sony Ericsson FCC ID: PY7A3880071 (U20a) portable telephone with RF safety guidelines is demonstrated. The applicable RF safety guidelines and the SAR measurement specifications used for the test are described in the SAR Measurement Specifications of Wireless Handsets [1].

2 Customer details

Company Name:	Sony Ericsson Mobile Communications AB
Address:	Sony Ericsson, Lund, Sweden
Contact Name:	Ola Samuelsson

3 Device Under Test

3.1 Antenna Description

Type	Internal antenna	
Location	Bottom of the phone	
Main and BT antennas distance	65,3 mm	
Dimensions	Max length	46 mm
	Max width	10 mm
Configuration	PIFA	

3.2 Device Description

Device model	AAD-3880071-BV					
Market name	U20a					
Serial number (EUT #)	CB511H8ALF (#18137) CB511H8ALH (#18141) – WLAN					
Mode	GSM 850			GSM 1900		
Crest factor	8.3			8.3		
Multiple access scheme	TDMA			TDMA		
Channel No.	128	190	251	512	661	885
Measured Power Level [dBm] [1] **(#18137)**	33,8	33,9	33,9	30,4	30,7	30,9
Product Maximum power Level [dBm][1]	34,0	34,0	34,0	31,0	31,0	31,0
Data mode	GPRS			GPRS		
Crest factor	4.15 (2Tx)			4.15 (2Tx)		
Measured Power Level [dBm] [1] **(#18137)**	31,0	31,0	31,0	29,8	29,9	29,7
Product Maximum power Level [dBm][1]	31,0	31,0	31,0	30,0	30,0	30,0
Crest factor	3.1125 (3Tx)			3.1125 (3Tx)		
Measured Power Level [dBm] [1] **(#18137)**	28,9	29,0	28,9	28,0	27,9	27,8
Product Maximum power Level [dBm][1]	29,0	29,0	29,0	28,0	28,0	28,0
Crest factor	2.075 (4Tx)			2.075 (4Tx)		
Measured Power Level [dBm] [1] **(#18137)**	27,9	27,9	27,9	27,0	26,9	26,8
Product Maximum power Level [dBm][1]	28,0	28,0	28,0	27,0	27,0	27,0
Data mode	EDGE			EDGE		
Crest factor	4.15 (2Tx)			4.15 (2Tx)		
Measured Power Level [dBm] [1] **(#18137)**	27,3	27,4	27,4	26,5	26,6	26,5
Product Maximum power Level [dBm][1]	28,0	28,0	28,0	27,0	27,0	27,0
Crest factor	3.1125 (3Tx)			3.1125 (3Tx)		
Measured Power Level [dBm] [1] **(#18137)**	25,2	25,4	25,3	24,6	24,6	24,5
Product Maximum power Level [dBm][1]	26,0	26,0	26,0	25,0	25,0	25,0
Crest factor	2.075 (4Tx)			2.075 (4Tx)		
Measured Power Level [dBm] [1] **(#18137)**	23,2	23,3	23,4	22,6	22,6	22,5
Product Maximum power Level [dBm][1]	24,0	24,0	24,0	23,0	23,0	23,0
Transmitting frequency range [MHz]	824.0 - 849.0			1850.0 - 1910.0		

[1] These values are supplied by the customer

Sony Ericsson

Company Internal
REPORT

Prepared (also subject responsible if other)		No.		
LD/SEMC/CVVBALE Kent Lorentzon		*CVVA10:213*		
Approved	Checked	Date	Rev	Reference
BA/SEMC/CVVBAU Jon Kenny	JK	*100518*	A	File

Mode	UMTS 2			UMTS 5		
Crest factor	1			1		
Multiple access scheme	WCDMA			WCDMA		
Channel No.	9262	9400	9538	4132	4183	4233
Measured Power Level [dBm] [1] **(#18137)**	24,7	24,6	24,7	24,8	24,6	24,8
Product Maximum power Level [dBm][1]	24,8	24,8	24,8	24,8	24,8	24,8
Data Mode	(See section 3.3)			(See section 3.3)		
Transmitting frequency range [MHz]	1852.4 – 1907.6			826.4 – 846.6		

GPRS Multislot class	12
EDGE class	12
GPRS Capability class	B
BT class and conducted power	Class 1/ 10,0 mW.
Prototype or production unit	Preproduction
Hardware Version	AP1.2
Software version	1.0.A.1.27
Device category	Portable
RF exposure environment	General population / uncontrolled

WLAN Conducted Output Power								
Mode	Max Average Output Power[1] (dBm)	EUT (#18141) Measured Average Power[1] (dBm)			Max Peak Output Power[1] (dBm)	EUT (#18141) Measured Peak Power[1] (dBm)		
		Ch 1	Ch 6	Ch 11		Ch 1	Ch 6	Ch 11
802.11b 1Mbit/sec	18,5	17,9	18,2	18,4	20,5	19,9	20,2	20,4
802.11b 2Mbit/sec		18,4	18,5	18,5		20,4	20,5	20,5
802.11b 5.5Mbit/sec		18,3	18,4	18,4		20,3	20,4	20,4
802.11b 11Mbit/sec		18,3	18,5	18,4		20,3	20,5	20,4
802.11g 6Mbit/sec	16,5	15,3	15,5	15,6	24,5	23,3	23,5	23,6
802.11g 9Mbit/sec		15,3	15,5	15,6		23,3	23,5	23,6
802.11g 12Mbit/sec		15,3	15,5	15,6		23,3	23,5	23,6
802.11g 18Mbit/sec		15,3	15,5	15,6		23,3	23,5	23,6
802.11g 24Mbit/sec		15,3	15,4	15,6		23,3	23,4	23,6
802.11g 36Mbit/sec		15,4	15,4	15,7		23,4	23,4	23,7
802.11g 48Mbit/sec		13,9	14,2	14,2		21,9	22,2	22,2
802.11g 54Mbit/sec		14,0	14,2	14,2		22,0	22,2	22,2

[1] These values are supplied by the customer

3.3 HSPA Power Characteristics

The conducted power of the device was confirmed in two UMTS circuit switched modes (RMC and Voice) and four HSDPA modes. A CMU-200 was used to establish the call processing and modulation settings and an RF power meter was used for measurement. For all HSDPA measurements, the following settings were applied:

H-SET3 QPSK
CQI feedback=2msec
△ACK= △NACK= △CQI=8

The results (including relevant CMU settings) are presented in the following table:

EUT# 18137					Band 2				Band 5	
				Freq.(MHz)	1852,4	1880,0	1907,6	826,4	836,4	846,6
	βC	βD	ΔHS	max->	24,8	24,8	24,8	24,8	24,8	24,8
CS - RMC	8	15	-		24,7	24,6	24,7	24,6	24,5	24,7
CS - voice	8	15	-		24,7	24,6	24,7	24,6	24,5	24,7
HSDPA - 1	2	15	8		24,5	24,4	24,5	24,4	24,3	24,5
HSDPA - 2	12	15	8		24,4	24,3	24,4	24,2	24,2	24,3
HSDPA - 3	15	8	8		24,0	24,0	24,0	23,8	23,7	24,0
HSDPA - 4	15	4	8		24,0	23,9	23,9	23,8	23,7	23,8

The measured 1-gram averaged SAR values of the device against head and body are provided in the test results chapter. For head and body measurement, the unit was measured in the following (CS) voice modes:

RMC=12.2, β_c=8, β_d=15

In HSUPA mode, additional code channels (E-DPCCH, E-DPDCHn) are added for data transfer in the uplink at higher bit rates.

5 sub-tests are defined by 3GPP TS 34.121 [7] according to the following table:

Sub-test	$ß_c$	$ß_d$	$ß_d$ (SF)	$ß_c/ß_d$	$ß_{hs}$ (1)	$ß_{ec}$	$ß_{ed}$	$ß_{ec}$ (SF)	$ß_{ed}$ (code)	CM (dB)(2)	MPR (dB)	AG(4) Index	E-TFCI
1	11/15(3)	15/15(3)	64	11/15(3)	22/15	209/225	1039/225	4	1	1.0	0.0	20	75
2	6/15	15/15	64	6/15	12/15	12/15	94/75	4	1	3.0	2.0	12	67
3	15/15	9/15	64	15/9	30/15	30/15	$ß_{ed1}$:47/15 $ß_{ed2}$:47/15	4	2	2.0	1.0	15	92
4	2/15	15/15	64	2/15	4/15	2/15	56/75	4	1	3.0	2.0	17	71
5	15/15(4)	15/15(4)	64	15/15(4)	30/15	24/15	134/15	4	1	1.0	0.0	21	81

Note 1: $\Delta_{ACK}, \Delta_{NACK}, \Delta_{CQI} = 8 \Longleftrightarrow A_{hs} = ß_{hs}/ß_c = 30/15 \Longleftrightarrow ß_{hs} = 30/15 * ß_c$
Note 2: CM = 1 for $ß_c/ß_d$ = 12/15, $ß_{hs}/ß_c$ = 24/15. For all other combinations of DPDCH, DPCCH, HS-DPCCH, E-DPDCH and E-DPCCH the MPR is based on the relative CM difference
Note 3: For sub-test 1 the $ß_c/ß_d$ ratio of 11/15 for the TFC during the measurement period (TF1, TF0) is achieved by setting the signalled gain factors for the reference TFC (TF1, TF1) to $ß_c$ = 10/15 and $ß_d$ = 15/15
Note 4: For sub-test 5 the $ß_c/ß_d$ ratio of 15/15 for the TFC during the measurement period (TF1, TF0) is achieved by setting the signalled gain factors for the reference TFC (TF1, TF1) to $ß_c$ = 14/15 and $ß_d$ = 15/15
Note 5: Testing UE using E-DPDCH Physical Layer category 1 sub-test 3 is not required according to TS 25.306 Table 5.1g
Note 6: $ß_{ed}$ cannot be set directly; it is set by Absolute Grant Value

EUT# 18137		Band 2			Band 5		
	Freq. (MHz)	1852,4	1880,0	1907,6	826,4	836,4	846,6
	max->	24,8	24,8	24,8	24,8	24,8	24,8
HSUPA - Sub-test 1		23,7	23,7	23,5	23,3	23,2	23,8
HSUPA - Sub-test 2		22,5	22,3	22,3	22,6	22,4	22,1
HSUPA - Sub-test 3		23,0	23,1	22,5	22,4	22,7	22,5
HSUPA - Sub-test 4		23,0	22,6	22,3	22,3	22,2	22,1
HSUPA - Sub-test 5		23,6	23,6	23,3	23,4	23,2	23,2

NOTE: None of the HSDPA/HSUPA settings leads to conducted power values exceeding the conducted power in RMC mode by more than 0.25 dB.
So no additional SAR measurements are required for those test modes.

NOTE: According to the subtest settings shown in Table above a Maximum Power Reduction (MPR) of up to 2dB can be expected in HSUPA subtest 2 – 4. The WCDMA measurement results may show a lower power reduction depending on the chipset features of the DUT [7].

4 Test equipment

4.1 Dosimetric system

SAR measurements were made using the DASY4 professional system (software version 4.7, Build 80) with SAM twin phantom, manufactured by Schmid & Partner Engineering AG (SPEAG). The list of calibrated equipment is given below.

Description	Serial Number	Due Date
DASY4 DAE3	433	2011-01
E-field probe ES3DV3	3062	2011-01
Dipole Validation Kit, D835V2	4d039	2012-01
Dipole Validation Kit, D1900V2	5d002	2011-01
Dipole Validation Kit, D2450V2	745	2011-03

4.2 Additional equipment

Description	Inventory Number	Due Date
Signal generator R&S SML03	20007666	2011-03
Directional coupler	S/N: 063	2011-03
Power meter R&S NRVD	483920	2011-03
Power sensor R&S NRV-Z5	2333	2011-03
Power sensor R&S NRV-Z5	2334	2011-03
Network analyzer HP 8753C	421671	2011-03
Dielectric probe kit HP 85070D	20000053	Self Cal
R&S CMU200	S/N: 837024/091	2011-03

5 Electrical parameters on the tissue simulating liquid

Prior to conducting SAR measurements, the relative permittivity, ε_r, and the conductivity σ, of the tissue simulating liquids were measured with the dielectric probe kit. These values are shown in the table below. The mass density, ρ, entered into the DASY4 software is also given. Recommended limits for permittivity ε_r, conductivity σ and mass density ρ are also shown.

f [MHz]	Tissue type	Measured / Recommended	Dielectric Parameters		Density
			ε_r	σ [S/m]	ρ [g/cm³]
835	Head	Measured 2010-04-29	40.80	0.87	1.00
		Recommended	41.50	0.90	1.00
835	Body	Measured 2010-05-03	52.60	0.96	1.00
		Recommended	55.20	0.97	1.00
1900	Head	Measured 2010-04-27	38.40	1.46	1.00
		Recommended	40.00	1.40	1.00
1900	Body	Measured 2010-05-04	52.30	1.58	1.00
		Recommended	53.30	1.52	1.00
2450	Head	Measured 2010-04-26	38.20	1.82	1.00
		Recommended	39.20	1.80	1.00
2450	Body	Measured 2010-04-26	50.50	1.97	1.00
		Recommended	52.70	1.95	1.00

6 System accuracy verification

A system accuracy verification of the DASY4 was performed using the dipole validation kit listed in section 4.1. The system verification test was conducted on the same day as the measurement of the DUT. The ambient humidity and temperature of test facility were kept between the range 30-70% and 20.0-25.0 °C respectively.
RF noise had been measured in liquid when all RF equipment in lab was switched off. Measured value was 0.0002 mW/g in 1g mass.

f [MHz]	Tissue type	Measured / Reference	SAR [W/kg] 1g	Dielectric Parameters		Density	Liquid T[°C]
				ε_r	σ [S/m]	ρ [g/cm³]	
835	Head	Measured 2010-04-29	9.58	40.80	0.87	1.00	22.8
		Recommended	9.71	41.50	0.90	1.00	22.0
835	Body	Measured 2010-05-03	9.09	52.60	0.96	1.00	21.8
		Recommended	9.90	55.20	0.97	1.00	22.0
1900	Head	Measured 2010-04-27	40.6	38.40	1.46	1.00	21.6
		Recommended	39.9	40.00	1.40	1.00	22.0
1900	Body	Measured 2010-05-04	40.1	52.30	1.58	1.00	22.2
		Recommended	41.5	53.30	1.52	1.00	22.0
2450	Head	Measured 2010-04-26	53.1	38.20	1.82	1.00	22.5
		Recommended	52.9	39.20	1.80	1.00	23.0
2450	Body	Measured 2010-04-26	53.0	50.50	1.97	1.00	22.5
		Recommended	52.4	52.70	1.95	1.00	22.0

7 SAR measurement uncertainty

SAR measurement uncertainty evaluation for Sony Ericsson PY7A3880071 (U20a) phone
According to IEEE 1528

Uncertainty Component	Uncer. (%)	Prob Dist.	Div.	C_i	1g mass
Measurement System					
Probe Calibration	±5.9	N	1	1	±5.9
Axial Isotropy	±4.7	R	√3	0.7	±1.9
Spherical Isotropy	±9.6	R	√3	0.7	±3.9
Boundary effect	±1.0	R	√3	1	±0.6
Probe linearity	±4.7	R	√3	1	±2.7
Detection limit	±1.0	R	√3	1	±0.6
Readout electronics	±0.3	N	1	1	±0.3
Response time	±0.8	R	√3	1	±0.5
Integration time	±2.6	R	√3	1	±1.5
RF Ambient Conditions	±3.0	R	√3	1	±1.7
Mech. Constraints of robot	±0.4	R	√3	1	±0.2
Probe positioning	±2.9	R	√3	1	±1.7
Extrap, interpolation and integration	±1.0	R	√3	1	±0.6
Measurement System Uncertainty					*±8.4*
Test Sample Related					
Device positioning	±3.5	N	1	1	±3.5
Device holder uncertainty	±3.5	N	1	1	±3.5
Power drift	±5.0	R	√3	1	±2.9
Test Sample Related Uncertainty					*±5.5*
Phantom and Tissue Parameters					
Phantom uncertainty	±4.0	R	√3	1	±2.3
Liquid conductivity (measured)	±2.5	R	1	0.64	±1.6
Liquid conductivity (target)	±5.0	R	√3	0.64	±1.8
Liquid Permittivity (measured)	±2.5	R	1	0.6	±1.5
Liquid Permittivity (target)	±5.0	R	√3	0.6	±1.7
Phantom and Tissue Parameters Uncertainty					*±4.1*
Combined standard uncertainty					*±10.8*
Extended standard uncertainty (k=2)					***±21.6***

8 Test results

The ambient humidity and temperature of test facility were kept between the range 30-70% and 20.0-25.0 °C respectively. A base station simulator was used to control the device during the SAR measurement. The DUT was supplied with a fully charged battery for each measurement.

For head measurement, the DUT was on the right-hand side and the left-hand side of the phantom, in two phone positions, cheek (touch) and tilt (cheek + 15°). The DUT was tested at the lowest, middle and highest frequencies in the transmission band. The measured 1-gram averaged SAR values of the DUT towards the head are provided in Table 1.

For body measurement the DUT was tested with the back (antenna) and front(display) towards the phantom flat section with 15 mm distance in both speech and data mode. For all modes, the device was tested at the lowest, middle and highest frequencies in the transmission band. For portable hands free (PHF) usage the Sony Ericsson headset MH810 was connected to the DUT. The measured 1-gram averaged SAR values of the DUT towards the body are provided in Table 2.

Band	Channel	Measured output power[1] [dBm]	Position	Liquid T [°C]	Measured SAR [W/Kg]	
					Left-hand 1g mass	Right-hand 1g mass
GSM 850	128	33,8	Cheek	22,8	0,17	0,17
	190	33,9	Cheek	22,8	0,24	0,25
			Tilt	22,8	0,17	0,15
	251	33,9	Cheek	22,8	**0,31**	0,30
GSM1900	512	30,4	Tilt	21,6	0,56	0,62
	661	30,7	Cheek	21,6	0,52	0,49
			Tilt	21,6	0,70	0,79
	810	30,9	Tilt	21,6	0,78	**0,88**
UMTS2	9262	24,7	Cheek	21,6	0,87	0,91
			Tilt	21,6	1,20	1,40
	9400	24,6	Cheek	21,6	0,85	0,95
			Tilt	21,6	1,25	**1,48**
	9538	24,7	Cheek	21,6	0,97	0,96
			Tilt	21,6	1,36	1,47
UMTS5	4132	24,8	Cheek	22,8	0,20	0,22
	4183	24,6	Cheek	22,8	0,24	0,26
			Tilt	22,8	0,16	0,16
	4233	24,8	Cheek	22,8	0,29	**0,30**
WLAN 802.11b 1Mbps	1	18,0	Cheek	22,5	**0,14**	0,08
			Tilt	22,5	0,13	0,11
	6	18,3	Cheek	22,5	0,11	0,10
			Tilt	22,5	0,09	0,10
	11	18,5	Cheek	22,5	0,12	0,12

Table 1: SAR measurement result for Sony Ericsson PY7A3880071 telephone at highest possible output power. Measured towards the head.

[1] The measured output power values were provided by the customer.

Sony Ericsson

Company Internal
REPORT

Prepared (also subject responsible if other)		No.		
LD/SEMC/CVVBALE Kent Lorentzon		*CVVA10:213*		
Approved	Checked	Date	Rev	Reference
BA/SEMC/CVVBAU Jon Kenny	JK	*100518*	A	File

Band	Channel	Measured output power[1] [dBm]	Position / Mode	Liquid T [°C]	Measured SAR [W/kg] 1g mass
GSM 850	128	31,0	Back / GPRS 2Tx	21,8	0,47
		33,8	Back / Speech	21,8	0,42
	190	31,0	Back / GPRS 2Tx	21,8	0,60
		33,9	Back / Speech PHF	21,8	0,49
		33,9	Back / Speech	21,8	0,62
	251	31,0	Back / GPRS 2Tx	21,8	0,68
		28,9	Back / GPRS 3Tx	21,8	0,62
		27,9	Back / GPRS 4Tx	21,8	0,65
		31,0	Front / GPRS 2Tx	21,8	0,18
		33,9	Back / Speech	21,8	**0,70**
		27,4	Back / Edge 2Tx	21,8	0,30
GSM 1900	512	29,8	Back / GPRS 2Tx	22,2	0,49
		30,4	Back / Speech PHF	22,2	0,35
	661	29,9	Back / GPRS 2Tx	22,2	0,52
		27,9	Back / GPRS 3Tx	22,2	0,48
		26,9	Back / GPRS 4Tx	22,2	0,51
		30,7	Back / Speech PHF	22,2	0,41
		30,7	Back / Speech	22,2	0,36
	810	29,7	Back / GPRS 2Tx	22,2	**0,55**
		29,7	Front / GPRS 2Tx	22,2	0,39
		26,5	Back / Edge 2Tx	22,2	0,27
		30,9	Back / Speech PHF	22,2	0,40
UMTS2	9262	24,7	Back / Speech PHF	22,2	0,70
	9400	24,6	Back / Speech PHF	22,2	0,68
	9538	24,7	Back / Speech	22,2	0,68
		24,7	Front / Speech PHF	22,2	**0,71**
		24,7	Back / Speech PHF	22,2	0,39
UMTS5	4132	24,8	Back / Speech	21,8	0,53
	4183	24,6	Back / Speech	21,8	0,62
	4233	24,8	Back / Speech PHF	21,8	0,57
		24,8	Back / Speech	21,8	**0,76**
		24,8	Front / Speech	21,8	0,19
WLAN 802.11b 1Mbps	1	18,0	Back	22,5	**0,20**
	6	18,3	Back	22,5	**0,20**
			Front	22,5	0,06
	11	18,5	Back	22,5	0,16

Table 2: SAR measurement result for Sony Ericsson PY7A3880071 telephone at highest possible output power. Measured towards the body.

[1] The measured output power values were provided by the customer.

Note: Theoretical SAR value (worst case) for multiple transmitters (collateral transmitters) was **1.59** for Tilt Right phone position combine UMTS band 2 and WLAN.
The Volume scan SAR measurement has not been made according demand in FCC KDB 648474 document.

9 References

[1] R.Plicanic. “SAR Measurement Specification of Wireless Handsets”. Sony Ericsson SAR Test Laboratory internal document GUG/N 03:141

[2] FCC. “Evaluating Compliance with FCC Guidelines for Human Exposure to Radio Frequency Electromagnetic Fields: Additional Information for Evaluating Compliance of Mobile and Portable Devices with FCC Limits for Human Exposure to Radio Frequency Emissions.” Supplement C (Edition 01-01) to OET Bulletin 65 (Edition 97- 01).

[3] IEEE. “Recommended Practice for Determining the Peak Spatial-Average Specific Absorption Rate (SAR) in the Human Body Due to Wireless Communications Devices: Experimental Techniques.” Std 1528-2003. June. 2003.

[4] IEC 62209-1. "Procedure to measure the Specific Absorption Rate (SAR) for hand-held mobile wireless devices in the frequency range of 300 MHz to 3 GHz". February 2005.

[5] FCC KDB648474. "SAR Evaluation Consideration for HANDSETS with Multiple Transmitters and Antenna", April 2008.

[6] FCC KDB248227. "SAR Measurement procedure for 802.11a/b/g Transmitters”, May 2007.

[7] PBA KDB Input Tracking number #703553 regarding function of HSUPA MPR (Maximum Power Reduction) of Qualcomm RF chipset.

Appendix

9.1 Photographs of the device under test

Front

Sides

Back

Back with Battery

9.2 Device position at SAM Twin Phantom

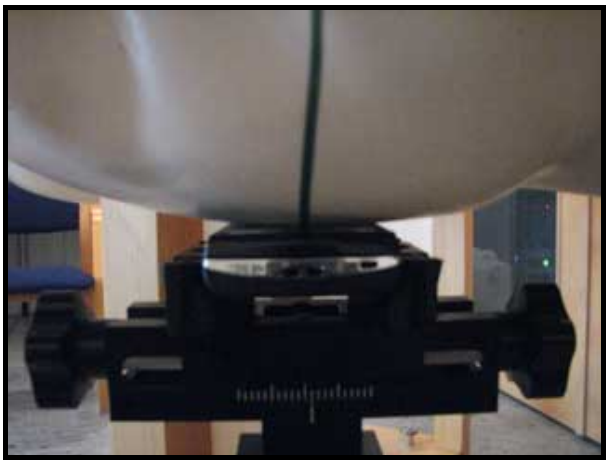

DUT position towards the head: Cheek (touch) position.

DUT position towards the head: Tilt (touch + 15°) position.

Sony Ericsson

Company Internal
REPORT

Prepared (also subject responsible if other)		No.		
LD/SEMC/CVVBALE Kent Lorentzon		*CVVA10:213*		
Approved	Checked	Date	Rev	Reference
BA/SEMC/CVVBAU Jon Kenny	JK	*100518*	A	File

DUT position towards the body, 15 mm distance

9.3 Attachments

- System validation
- Measurement plots
- Probe calibration
- Dipole calibration

Date/Time: 2010-04-29 09:54:01

Test Laboratory: Sony Ericsson Mobile Communications AB

System Performance Check 835MHz Head 100429

DUT: Dipole 835 MHz; Type: D835V2; Serial: 4d039

Communication System: CW; Frequency: 835 MHz;Duty Cycle: 1:1
Medium parameters used: f = 835 MHz; σ = 0.87 mho/m; ε_r = 40.8; ρ = 1000 kg/m^3
Phantom section: Flat Section
Measurement Standard: DASY4 (High Precision Assessment)

DASY4 Configuration:

- Probe: ES3DV3 - SN3062; ConvF(5.91, 5.91, 5.91); Calibrated: 2010-01-15
- Sensor-Surface: 4mm (Mechanical Surface Detection)
- Electronics: DAE3 Sn433; Calibrated: 2010-01-15
- Phantom: SAM 2; Type: SAM QD 000 P40 CB; Serial: TP-1396
- Measurement SW: DASY4, V4.7 Build 80; Postprocessing SW: SEMCAD, V1.8 Build 186

835 MHz Dipole/Area Scan (61x161x1): Measurement grid: dx=10mm, dy=10mm
Maximum value of SAR (interpolated) = 1.03 mW/g

835 MHz Dipole/Zoom Scan (5x5x7)/Cube 0: Measurement grid: dx=8mm, dy=8mm, dz=5mm
Reference Value = 34.9 V/m; Power Drift = -0.066 dB
Peak SAR (extrapolated) = 1.43 W/kg
SAR(1 g) = 0.958 mW/g; SAR(10 g) = 0.629 mW/g
Maximum value of SAR (measured) = 1.04 mW/g

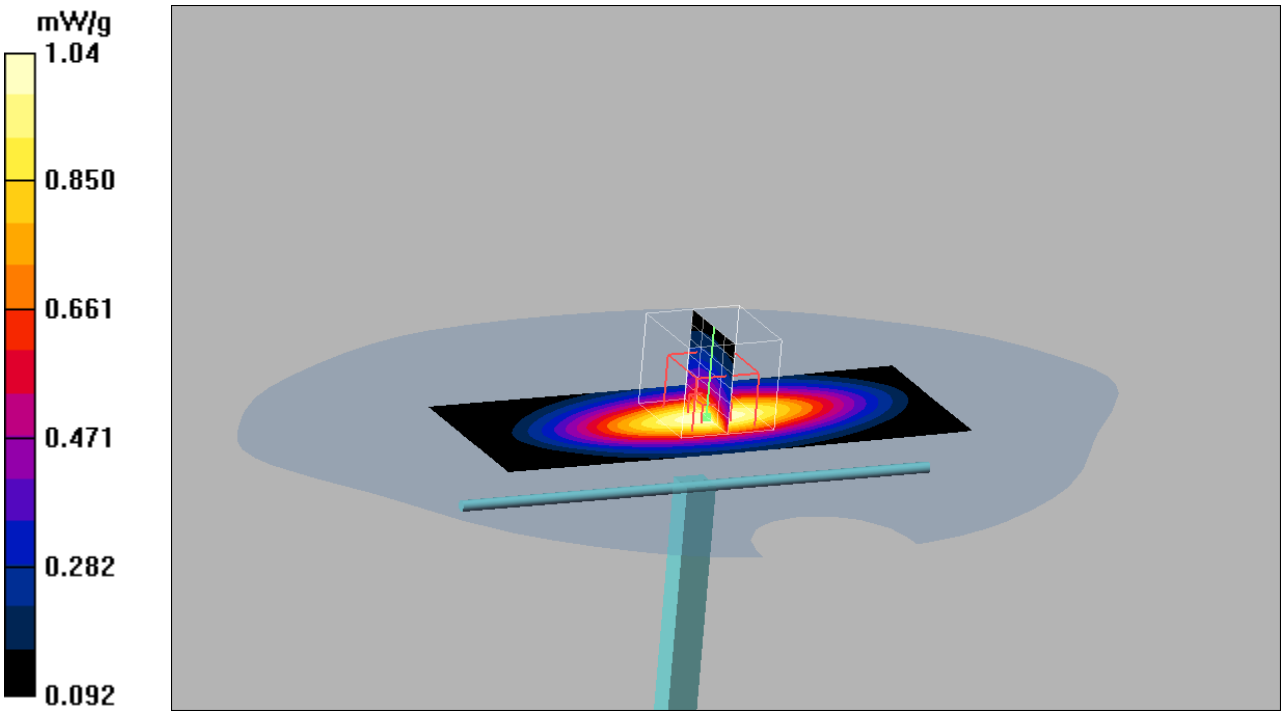

Date/Time: 2010-05-03 10:41:26

Test Laboratory: Sony Ericsson Mobile Communications AB

System Performance Check 835MHz Body 100503

DUT: Dipole 835 MHz; Type: D835V2; Serial: 4d039

Communication System: CW; Frequency: 835 MHz;Duty Cycle: 1:1
Medium parameters used: f = 835 MHz; σ = 0.87 mho/m; ε_r = 40.8; ρ = 1000 kg/m^3
Phantom section: Flat Section
Measurement Standard: DASY4 (High Precision Assessment)

DASY4 Configuration:

- Probe: ES3DV3 - SN3062; ConvF(5.91, 5.91, 5.91); Calibrated: 2010-01-15
- Sensor-Surface: 4mm (Mechanical Surface Detection)
- Electronics: DAE3 Sn433; Calibrated: 2010-01-15
- Phantom: SAM 2; Type: SAM QD 000 P40 CB; Serial: TP-1396
- Measurement SW: DASY4, V4.7 Build 80; Postprocessing SW: SEMCAD, V1.8 Build 186

835 MHz Dipole/Area Scan (61x161x1): Measurement grid: dx=10mm, dy=10mm
Maximum value of SAR (interpolated) = 0.976 mW/g

835 MHz Dipole/Zoom Scan (5x5x7)/Cube 0: Measurement grid: dx=8mm, dy=8mm, dz=5mm
Reference Value = 33.7 V/m; Power Drift = -0.008 dB
Peak SAR (extrapolated) = 1.34 W/kg
SAR(1 g) = 0.909 mW/g; SAR(10 g) = 0.595 mW/g
Maximum value of SAR (measured) = 0.985 mW/g

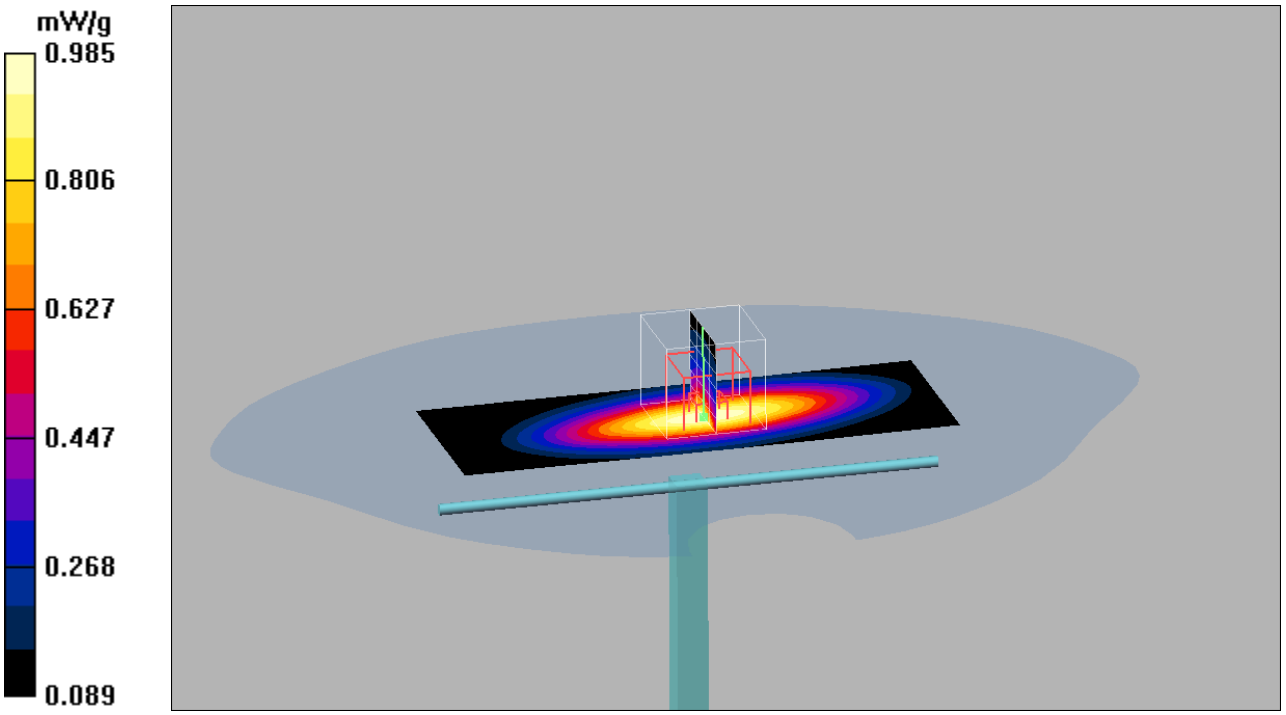

Date/Time: 2010-04-29 11:36:54

Test Laboratory: Sony Ericsson Mobile Communications AB

GSM850 Left Cheek 100429

DUT: PY7A3880071; Type: GSM, UMTS, WLAN; Serial: #18137

Communication System: GSM 850; Frequency: 848.8 MHz;Duty Cycle: 1:8.3
Medium parameters used (interpolated): f = 848.8 MHz; σ = 0.883 mho/m; ε_r = 40.7; ρ = 1000 kg/m^3
Phantom section: Left Section
Measurement Standard: DASY4 (High Precision Assessment)

DASY4 Configuration:

- Probe: ES3DV3 - SN3062; ConvF(5.91, 5.91, 5.91); Calibrated: 2010-01-15
- Sensor-Surface: 4mm (Mechanical Surface Detection (Locations From Previous Scan Used))
  Sensor-Surface: 4mm (Mechanical Surface Detection)Sensor-Surface: 0mm (Fix Surface)
- Electronics: DAE3 Sn433; Calibrated: 2010-01-15
- Phantom: SAM 2; Type: SAM QD 000 P40 CB; Serial: TP-1396
- Measurement SW: DASY4, V4.7 Build 80; Postprocessing SW: SEMCAD, V1.8 Build 186

High Cheek/Area Scan (61x111x1): Measurement grid: dx=10mm, dy=10mm
Maximum value of SAR (interpolated) = 0.330 mW/g
High Cheek/Zoom Scan (5x5x7)/Cube 0: Measurement grid: dx=8mm, dy=8mm, dz=5mm
Reference Value = 9.93 V/m; Power Drift = 0.032 dB
Peak SAR (extrapolated) = 0.380 W/kg
SAR(1 g) = 0.310 mW/g; SAR(10 g) = 0.239 mW/g
Maximum value of SAR (measured) = 0.324 mW/g
High Cheek/Z Scan (1x1x16): Measurement grid: dx=20mm, dy=20mm, dz=20mm
Maximum value of SAR (interpolated) = 0.043 mW/g

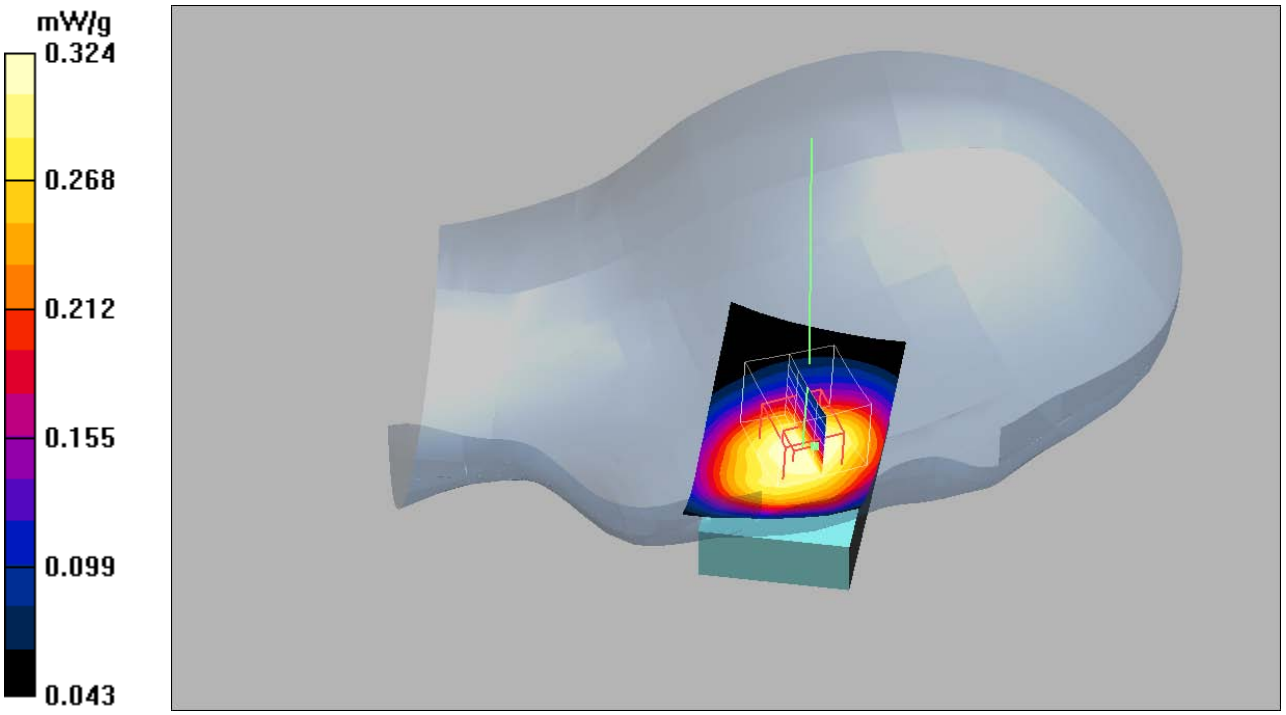

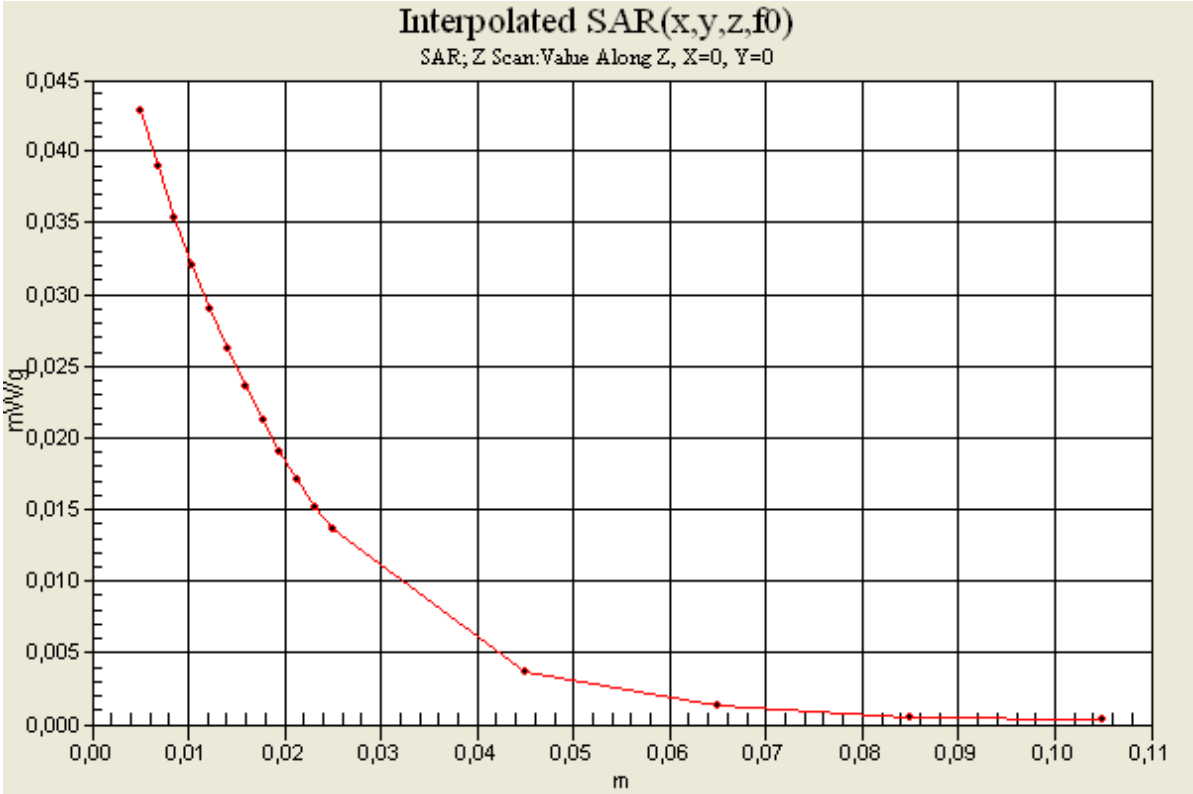
Interpolated SAR(x,y,z,f0)
SAR; Z Scan:Value Along Z, X=0, Y=0
mW/g
0,045
0,040
0,035
0,030
0,025
0,020
0,015
0,010
0,005
0,000
0,00
0,01
0,02
0,03
0,04
0,05
0,06
0,07
0,08
0,09
0,10
0,11
m

Date/Time: 2010-04-29 11:01:34

Test Laboratory: Sony Ericsson Mobile Communications AB

GSM850 Left Tilt 100429

DUT: PY7A3880071; Type: GSM, UMTS, WLAN; Serial: #18137

Communication System: GSM 850; Frequency: 836.6 MHz;Duty Cycle: 1:8.3
Medium parameters used (interpolated): f = 836.6 MHz; σ = 0.871 mho/m; ε_r = 40.8; ρ = 1000 kg/m^3
Phantom section: Left Section
Measurement Standard: DASY4 (High Precision Assessment)

DASY4 Configuration:

- Probe: ES3DV3 - SN3062; ConvF(5.91, 5.91, 5.91); Calibrated: 2010-01-15
- Sensor-Surface: 4mm (Mechanical Surface Detection (Locations From Previous Scan Used))
  Sensor-Surface: 4mm (Mechanical Surface Detection)
- Electronics: DAE3 Sn433; Calibrated: 2010-01-15
- Phantom: SAM 2; Type: SAM QD 000 P40 CB; Serial: TP-1396
- Measurement SW: DASY4, V4.7 Build 80; Postprocessing SW: SEMCAD, V1.8 Build 186

Mid Tilt/Area Scan (61x111x1): Measurement grid: dx=10mm, dy=10mm
Maximum value of SAR (interpolated) = 0.178 mW/g

Mid Tilt/Zoom Scan (5x5x7)/Cube 0: Measurement grid: dx=8mm, dy=8mm, dz=5mm
Reference Value = 10.9 V/m; Power Drift = 0.037 dB
Peak SAR (extrapolated) = 0.216 W/kg
SAR(1 g) = 0.169 mW/g; SAR(10 g) = 0.126 mW/g
Maximum value of SAR (measured) = 0.180 mW/g

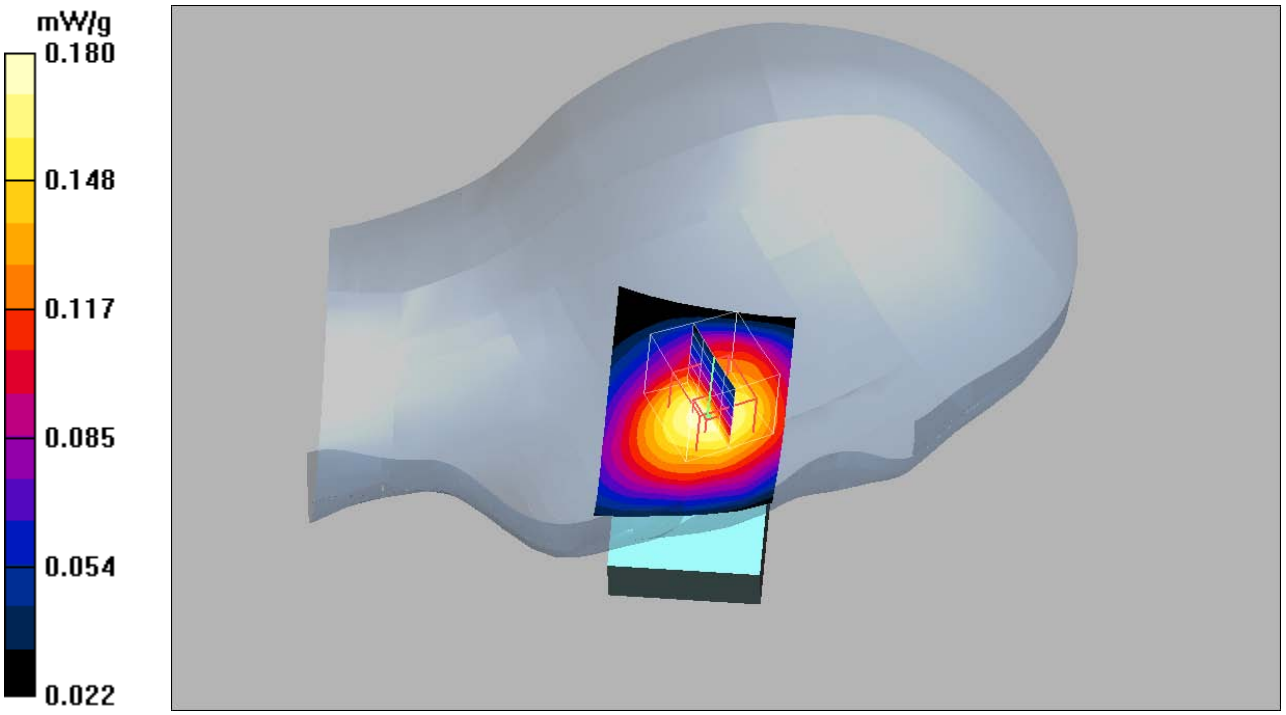

Date/Time: 2010-04-29 12:57:09

Test Laboratory: Sony Ericsson Mobile Communications AB

GSM850 Right Cheek 100429

DUT: PY7A3880071; Type: GSM, UMTS, WLAN; Serial: #18137

Communication System: GSM 850; Frequency: 848.8 MHz;Duty Cycle: 1:8.3
Medium parameters used (interpolated): f = 848.8 MHz; σ = 0.883 mho/m; ε_r = 40.7; ρ = 1000 kg/m^3
Phantom section: Right Section
Measurement Standard: DASY4 (High Precision Assessment)

DASY4 Configuration:

- Probe: ES3DV3 - SN3062; ConvF(5.91, 5.91, 5.91); Calibrated: 2010-01-15
- Sensor-Surface: 4mm (Mechanical Surface Detection (Locations From Previous Scan Used))
  Sensor-Surface: 4mm (Mechanical Surface Detection)
- Electronics: DAE3 Sn433; Calibrated: 2010-01-15
- Phantom: SAM 2; Type: SAM QD 000 P40 CB; Serial: TP-1396
- Measurement SW: DASY4, V4.7 Build 80; Postprocessing SW: SEMCAD, V1.8 Build 186

High Cheek/Area Scan (61x111x1): Measurement grid: dx=10mm, dy=10mm
Maximum value of SAR (interpolated) = 0.316 mW/g

High Cheek/Zoom Scan (5x5x7)/Cube 0: Measurement grid: dx=8mm, dy=8mm, dz=5mm
Reference Value = 8.78 V/m; Power Drift = 0.112 dB
Peak SAR (extrapolated) = 0.369 W/kg
SAR(1 g) = 0.298 mW/g; SAR(10 g) = 0.232 mW/g
Maximum value of SAR (measured) = 0.310 mW/g

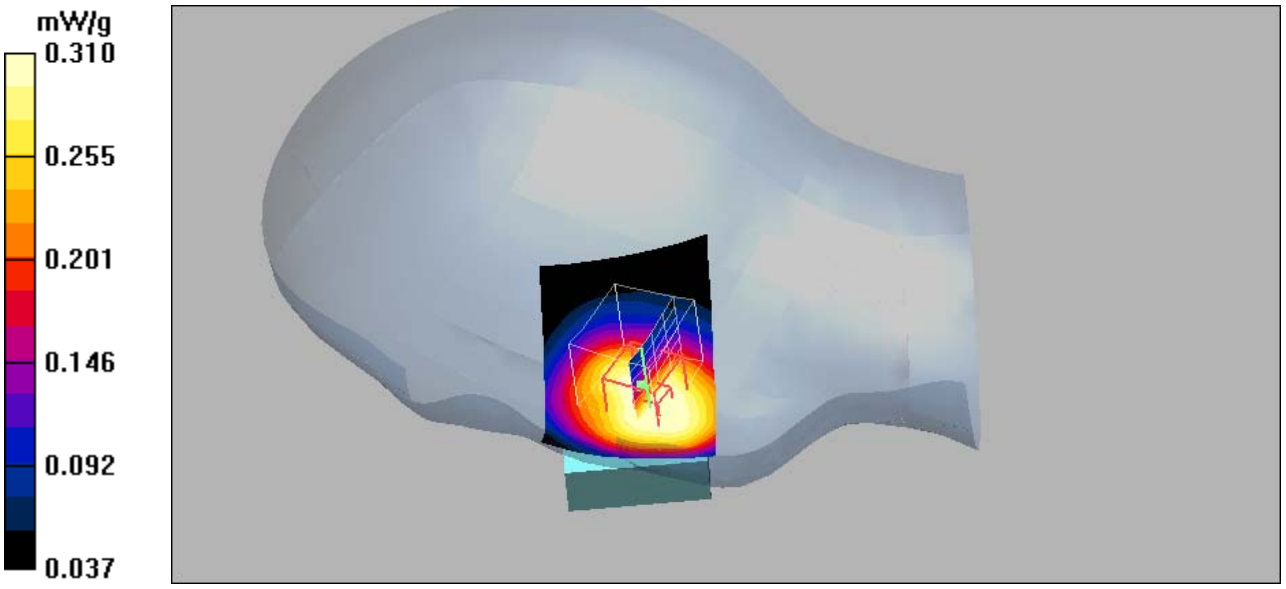

Date/Time: 2010-04-29 12:32:28

Test Laboratory: Sony Ericsson Mobile Communications AB

GSM850 Right Tilt 100429

DUT: PY7A3880071; Type: GSM, UMTS, WLAN; Serial: #18137

Communication System: GSM 850; Frequency: 836.6 MHz;Duty Cycle: 1:8.3
Medium parameters used (interpolated): f = 836.6 MHz; σ = 0.871 mho/m; ε_r = 40.8; ρ = 1000 kg/m^3
Phantom section: Right Section
Measurement Standard: DASY4 (High Precision Assessment)

DASY4 Configuration:

- Probe: ES3DV3 - SN3062; ConvF(5.91, 5.91, 5.91); Calibrated: 2010-01-15
- Sensor-Surface: 4mm (Mechanical Surface Detection (Locations From Previous Scan Used))
  Sensor-Surface: 4mm (Mechanical Surface Detection)
- Electronics: DAE3 Sn433; Calibrated: 2010-01-15
- Phantom: SAM 2; Type: SAM QD 000 P40 CB; Serial: TP-1396
- Measurement SW: DASY4, V4.7 Build 80; Postprocessing SW: SEMCAD, V1.8 Build 186

Mid Tilt/Area Scan (61x111x1): Measurement grid: dx=10mm, dy=10mm
Maximum value of SAR (interpolated) = 0.157 mW/g

Mid Tilt/Zoom Scan (5x5x7)/Cube 0: Measurement grid: dx=8mm, dy=8mm, dz=5mm
Reference Value = 10.4 V/m; Power Drift = 0.008 dB
Peak SAR (extrapolated) = 0.191 W/kg
SAR(1 g) = 0.150 mW/g; SAR(10 g) = 0.112 mW/g
Maximum value of SAR (measured) = 0.158 mW/g

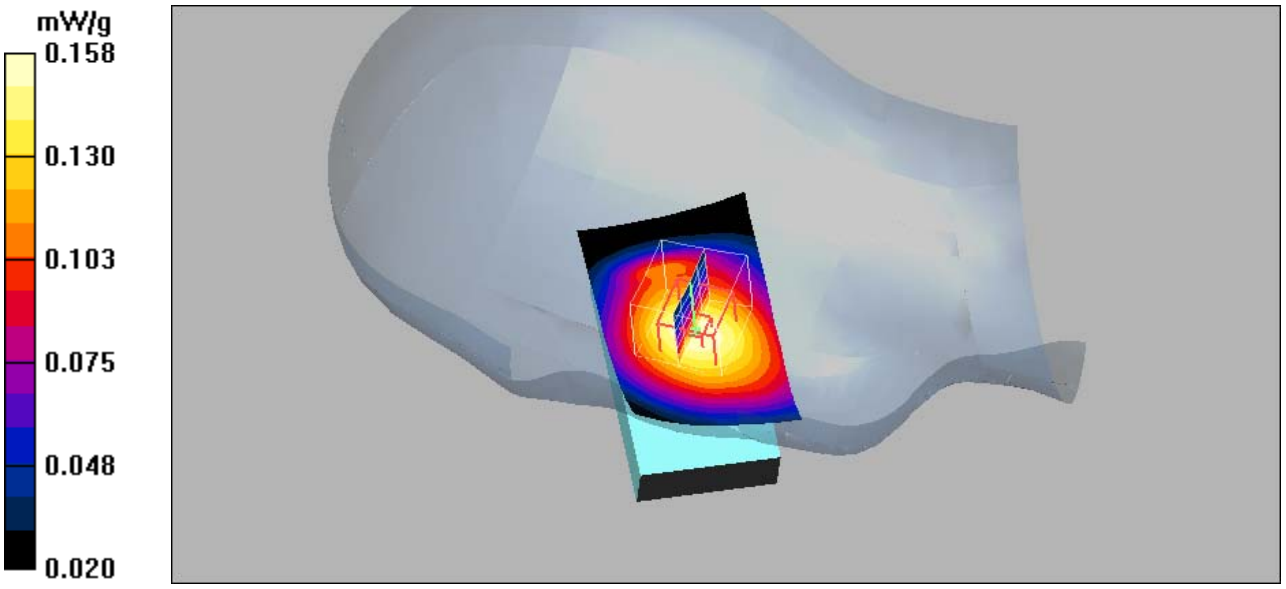

Date/Time: 2010-05-03 12:26:04

Test Laboratory: Sony Ericsson Mobile Communications AB

GSM850 Body Speech 100503

DUT: PY7A3880071; Type: GSM, UMTS, WLAN; Serial: #18137

Communication System: GSM 850; Frequency: 848.8 MHz;Duty Cycle: 1:8.3
Medium parameters used (interpolated): f = 848.8 MHz; σ = 0.975 mho/m; ε_r = 52.5; ρ = 1000 kg/m^3
Phantom section: Flat Section
Measurement Standard: DASY4 (High Precision Assessment)

DASY4 Configuration:

- Probe: ES3DV3 - SN3062; ConvF(5.79, 5.79, 5.79); Calibrated: 2010-01-15
- Sensor-Surface: 4mm (Mechanical Surface Detection (Locations From Previous Scan Used))
  Sensor-Surface: 4mm (Mechanical Surface Detection)Sensor-Surface: 0mm (Fix Surface)
- Electronics: DAE3 Sn433; Calibrated: 2010-01-15
- Phantom: SAM 2; Type: SAM QD 000 P40 CB; Serial: TP-1396
- Measurement SW: DASY4, V4.7 Build 80; Postprocessing SW: SEMCAD, V1.8 Build 186

High BT/Area Scan (61x111x1): Measurement grid: dx=10mm, dy=10mm
Maximum value of SAR (interpolated) = 0.749 mW/g
High BT/Zoom Scan (5x5x7)/Cube 0: Measurement grid: dx=8mm, dy=8mm, dz=5mm
Reference Value = 11.2 V/m; Power Drift = 0.030 dB
Peak SAR (extrapolated) = 1.02 W/kg
SAR(1 g) = 0.701 mW/g; SAR(10 g) = 0.467 mW/g
Maximum value of SAR (measured) = 0.756 mW/g
High BT/Z Scan (1x1x16): Measurement grid: dx=20mm, dy=20mm, dz=20mm
Maximum value of SAR (interpolated) = 0.053 mW/g

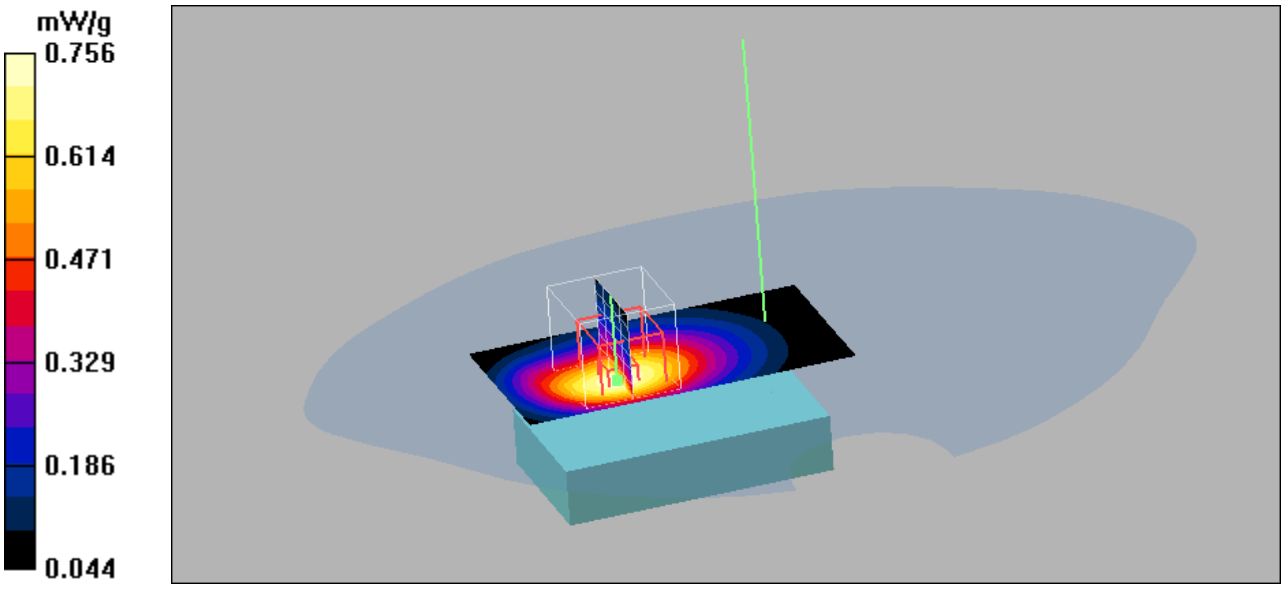

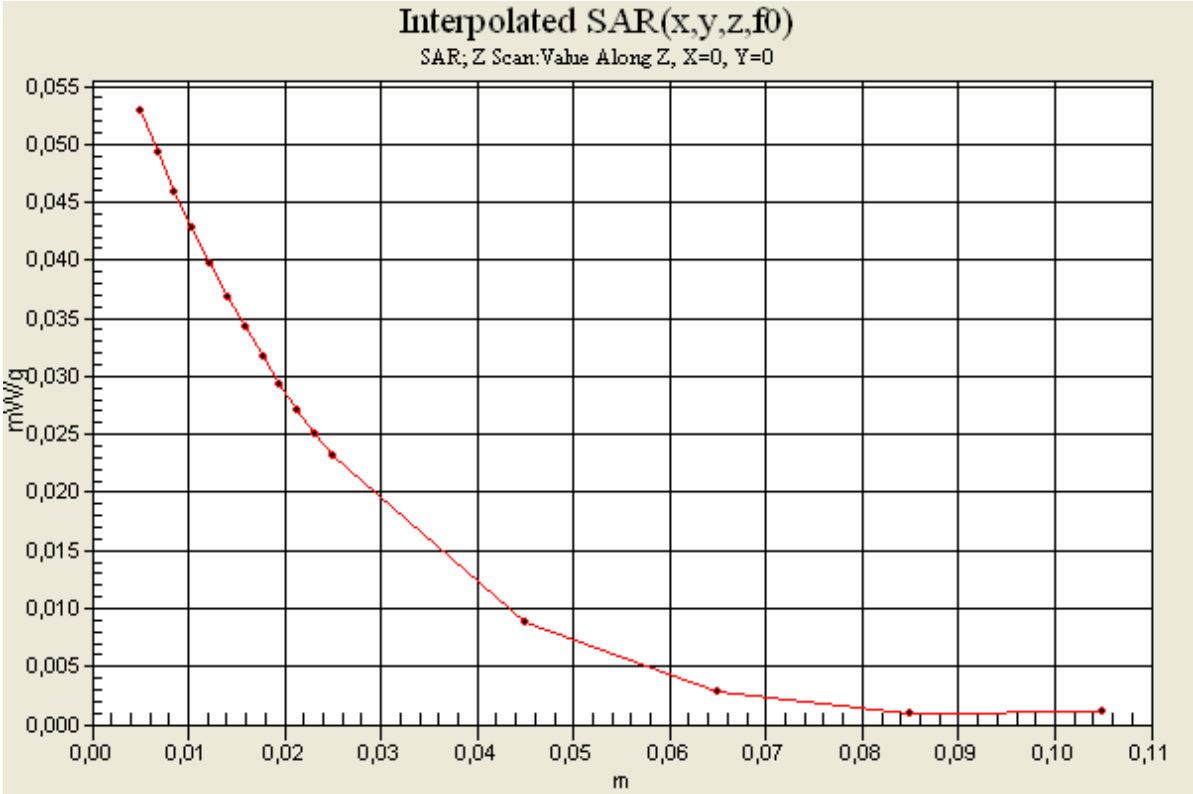
Interpolated SAR(x,y,z,f0)
SAR; Z Scan:Value Along Z, X=0, Y=0
mW/g
0,055
0,050
0,045
0,040
0,035
0,030
0,025
0,020
0,015
0,010
0,005
0,000
0,00
0,01
0,02
0,03
0,04
0,05
0,06
0,07
0,08
0,09
0,10
0,11
m

Date/Time: 2010-05-03 11:53:53

Test Laboratory: Sony Ericsson Mobile Communications AB

GSM850 Body Speech PHF 100503

DUT: PY7A3880071; Type: GSM, UMTS, WLAN; Serial: #18137

Communication System: GSM 850; Frequency: 836.6 MHz;Duty Cycle: 1:8.3
Medium parameters used (interpolated): f = 836.6 MHz; σ = 0.965 mho/m; ε_r = 52.6; ρ = 1000 kg/m^3
Phantom section: Flat Section
Measurement Standard: DASY4 (High Precision Assessment)

DASY4 Configuration:

- Probe: ES3DV3 - SN3062; ConvF(5.79, 5.79, 5.79); Calibrated: 2010-01-15
- Sensor-Surface: 4mm (Mechanical Surface Detection (Locations From Previous Scan Used))
  Sensor-Surface: 4mm (Mechanical Surface Detection)
- Electronics: DAE3 Sn433; Calibrated: 2010-01-15
- Phantom: SAM 2; Type: SAM QD 000 P40 CB; Serial: TP-1396
- Measurement SW: DASY4, V4.7 Build 80; Postprocessing SW: SEMCAD, V1.8 Build 186

Mid PHF/Area Scan (61x111x1): Measurement grid: dx=10mm, dy=10mm
Maximum value of SAR (interpolated) = 0.530 mW/g

Mid PHF/Zoom Scan (5x5x7)/Cube 0: Measurement grid: dx=8mm, dy=8mm, dz=5mm
Reference Value = 10.4 V/m; Power Drift = 0.041 dB
Peak SAR (extrapolated) = 0.712 W/kg
SAR(1 g) = 0.490 mW/g; SAR(10 g) = 0.326 mW/g
Maximum value of SAR (measured) = 0.523 mW/g

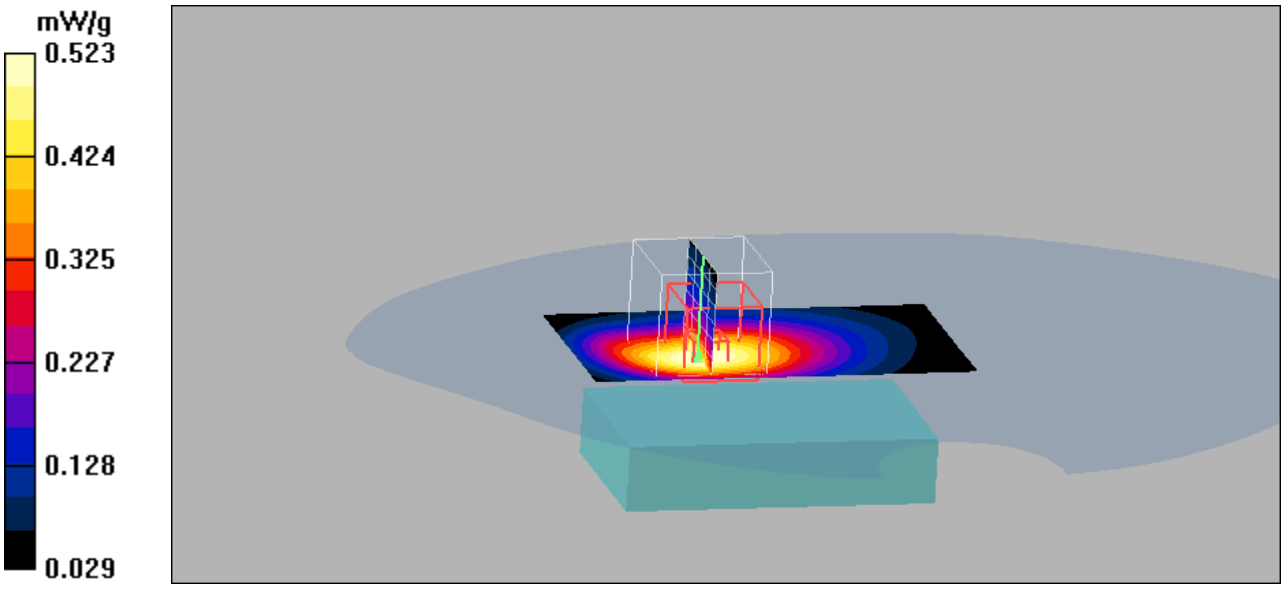

Date/Time: 2010-05-03 12:44:02

Test Laboratory: Sony Ericsson Mobile Communications AB

GSM850 Body GPRS 2TX 100503

DUT: PY7A3880071; Type: GSM, UMTS, WLAN; Serial: #18137

Communication System: GSM850 GPRS2TX; Frequency: 848.8 MHz;Duty Cycle: 1:4.15
Medium parameters used (interpolated): f = 848.8 MHz; σ = 0.975 mho/m; ε_r = 52.5; ρ = 1000 kg/m^3
Phantom section: Flat Section
Measurement Standard: DASY4 (High Precision Assessment)

DASY4 Configuration:

- Probe: ES3DV3 - SN3062; ConvF(5.79, 5.79, 5.79); Calibrated: 2010-01-15
- Sensor-Surface: 4mm (Mechanical Surface Detection)
- Electronics: DAE3 Sn433; Calibrated: 2010-01-15
- Phantom: SAM 2; Type: SAM QD 000 P40 CB; Serial: TP-1396
- Measurement SW: DASY4, V4.7 Build 80; Postprocessing SW: SEMCAD, V1.8 Build 186

High/Area Scan (61x111x1): Measurement grid: dx=10mm, dy=10mm
Maximum value of SAR (interpolated) = 0.736 mW/g

High/Zoom Scan (5x5x7)/Cube 0: Measurement grid: dx=8mm, dy=8mm, dz=5mm
Reference Value = 11.2 V/m; Power Drift = -0.035 dB
Peak SAR (extrapolated) = 0.982 W/kg
SAR(1 g) = 0.676 mW/g; SAR(10 g) = 0.451 mW/g
Maximum value of SAR (measured) = 0.730 mW/g

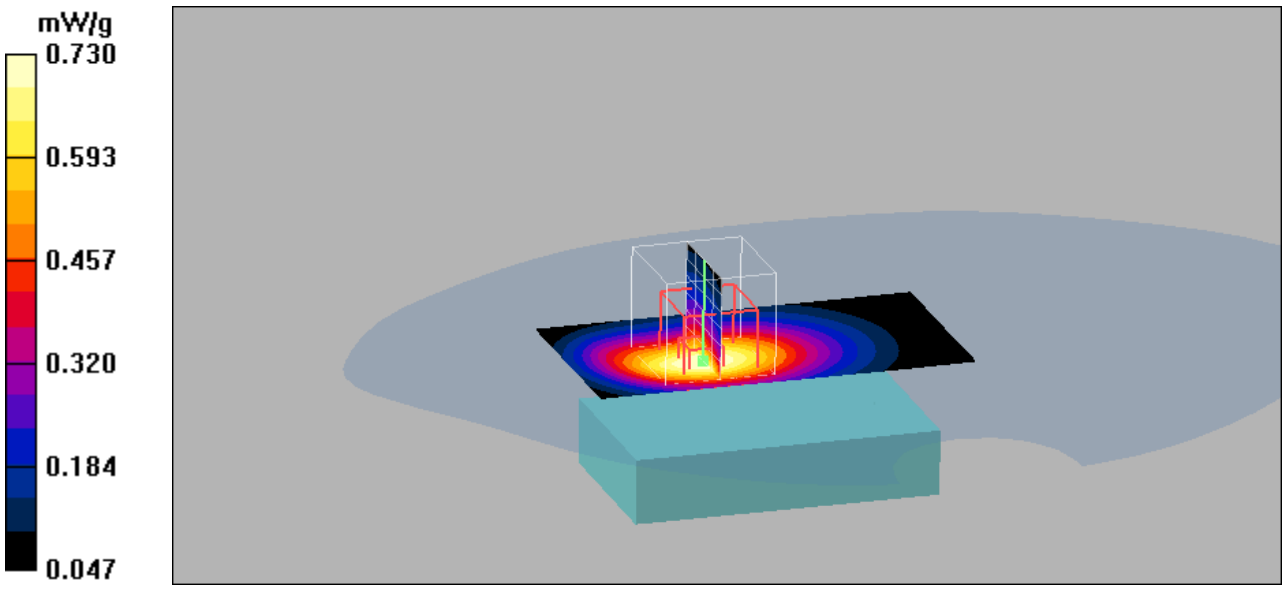

Date/Time: 2010-05-03 14:29:05

Test Laboratory: Sony Ericsson Mobile Communications AB

GSM850 Body Front GPRS 2TX 100503

DUT: PY7A3880071; Type: GSM, UMTS, WLAN; Serial: #18137

Communication System: GSM850 GPRS2TX; Frequency: 848.8 MHz;Duty Cycle: 1:4.15
Medium parameters used (interpolated): f = 848.8 MHz; σ = 0.975 mho/m; ε_r = 52.5; ρ = 1000 kg/m^3
Phantom section: Flat Section
Measurement Standard: DASY4 (High Precision Assessment)

DASY4 Configuration:

- Probe: ES3DV3 - SN3062; ConvF(5.79, 5.79, 5.79); Calibrated: 2010-01-15
- Sensor-Surface: 4mm (Mechanical Surface Detection (Locations From Previous Scan Used))
  Sensor-Surface: 4mm (Mechanical Surface Detection)
- Electronics: DAE3 Sn433; Calibrated: 2010-01-15
- Phantom: SAM 2; Type: SAM QD 000 P40 CB; Serial: TP-1396
- Measurement SW: DASY4, V4.7 Build 80; Postprocessing SW: SEMCAD, V1.8 Build 186

Front/Area Scan (61x111x1): Measurement grid: dx=10mm, dy=10mm
Maximum value of SAR (interpolated) = 0.189 mW/g

Front/Zoom Scan (5x5x7)/Cube 0: Measurement grid: dx=8mm, dy=8mm, dz=5mm
Reference Value = 7.51 V/m; Power Drift = 0.002 dB
Peak SAR (extrapolated) = 0.228 W/kg
SAR(1 g) = 0.178 mW/g; SAR(10 g) = 0.132 mW/g
Maximum value of SAR (measured) = 0.188 mW/g

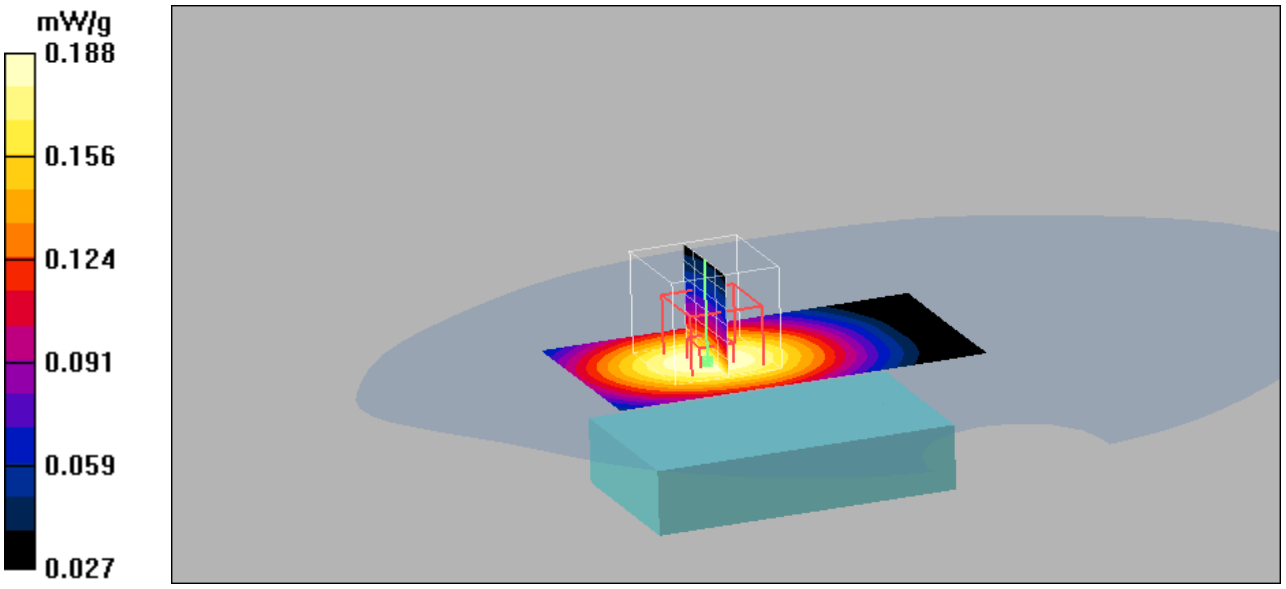

Date/Time: 2010-04-27 10:00:37

Test Laboratory: Sony Ericsson Mobile Communications AB

System Performance Check 1900MHz Head 100427

DUT: Dipole 1900 MHz; Type: D1900V2; Serial: 5d002

Communication System: CW; Frequency: 1900 MHz;Duty Cycle: 1:1
Medium parameters used: f = 1900 MHz; σ = 1.46 mho/m; ε_r = 38.4; ρ = 1000 kg/m^3
Phantom section: Flat Section
Measurement Standard: DASY4 (High Precision Assessment)

DASY4 Configuration:

- Probe: ES3DV3 - SN3062; ConvF(4.78, 4.78, 4.78); Calibrated: 2010-01-15
- Sensor-Surface: 4mm (Mechanical Surface Detection)
- Electronics: DAE3 Sn433; Calibrated: 2010-01-15
- Phantom: SAM 1; Type: Twin SAM; Serial: TP-1144
- Measurement SW: DASY4, V4.7 Build 80; Postprocessing SW: SEMCAD, V1.8 Build 186

19000 MHz Dipole/Area Scan (61x91x1): Measurement grid: dx=10mm, dy=10mm
Maximum value of SAR (interpolated) = 4.73 mW/g

19000 MHz Dipole/Zoom Scan (5x5x7)/Cube 0: Measurement grid: dx=8mm, dy=8mm, dz=5mm
Reference Value = 53.7 V/m; Power Drift = -0.072 dB
Peak SAR (extrapolated) = 7.65 W/kg
SAR(1 g) = 4.06 mW/g; SAR(10 g) = 2.07 mW/g
Maximum value of SAR (measured) = 4.58 mW/g

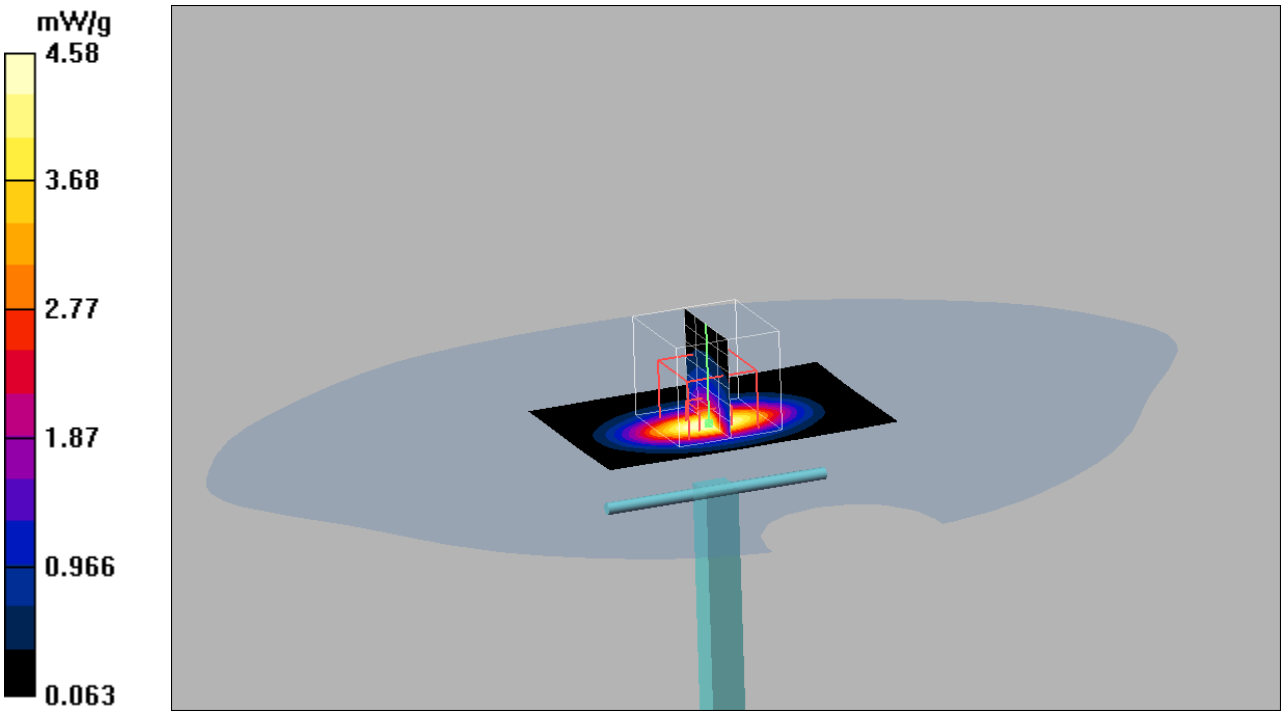

Date/Time: 2010-05-04 12:25:52

Test Laboratory: Sony Ericsson Mobile Communications AB

System Performance Check 1900MHz Body 100504

DUT: Dipole 1900 MHz; Type: D1900V2; Serial: 5d002

Communication System: CW; Frequency: 1900 MHz;Duty Cycle: 1:1
Medium parameters used: f = 1900 MHz; σ = 1.58 mho/m; ε_r = 52.3; ρ = 1000 kg/m^3
Phantom section: Flat Section
Measurement Standard: DASY4 (High Precision Assessment)

DASY4 Configuration:

- Probe: ES3DV3 - SN3062; ConvF(4.38, 4.38, 4.38); Calibrated: 2010-01-15
- Sensor-Surface: 4mm (Mechanical Surface Detection)
- Electronics: DAE3 Sn433; Calibrated: 2010-01-15
- Phantom: SAM 1; Type: Twin SAM; Serial: TP-1144
- Measurement SW: DASY4, V4.7 Build 80; Postprocessing SW: SEMCAD, V1.8 Build 186

1900 MHz Dipole/Area Scan (61x91x1): Measurement grid: dx=10mm, dy=10mm
Maximum value of SAR (interpolated) = 4.73 mW/g

1900 MHz Dipole/Zoom Scan (5x5x7)/Cube 0: Measurement grid: dx=8mm, dy=8mm, dz=5mm
Reference Value = 54.2 V/m; Power Drift = -0.069 dB
Peak SAR (extrapolated) = 6.97 W/kg
SAR(1 g) = 4.01 mW/g; SAR(10 g) = 2.08 mW/g
Maximum value of SAR (measured) = 4.55 mW/g

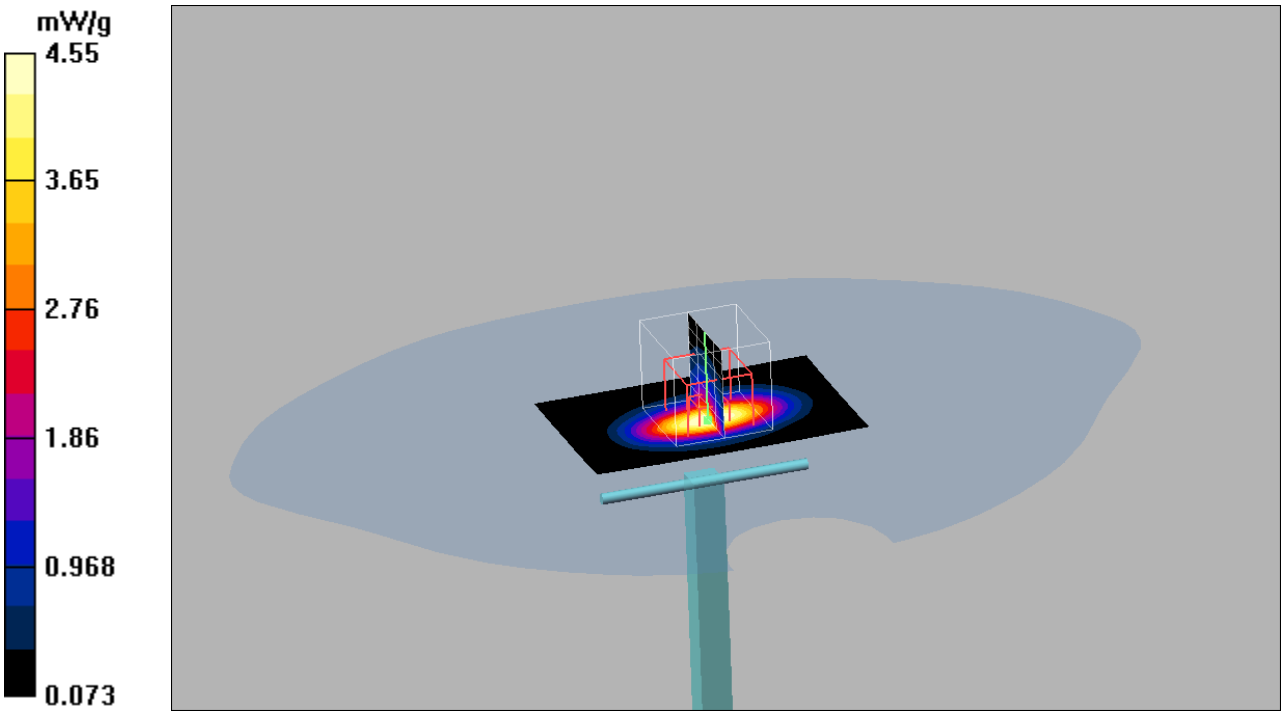

Date/Time: 2010-04-27 16:21:23

Test Laboratory: Sony Ericsson Mobile Communications AB

GSM1900 Left Cheek 100427

DUT: PY7A3880071; Type: GSM, UMTS, WLAN; Serial: #18137

Communication System: GSM 1900; Frequency: 1880 MHz;Duty Cycle: 1:8.3
Medium parameters used: f = 1880 MHz; σ = 1.43 mho/m; ε_r = 38.6; ρ = 1000 kg/m^3
Phantom section: Left Section
Measurement Standard: DASY4 (High Precision Assessment)

DASY4 Configuration:

- Probe: ES3DV3 - SN3062; ConvF(4.78, 4.78, 4.78); Calibrated: 2010-01-15
- Sensor-Surface: 4mm (Mechanical Surface Detection)
- Electronics: DAE3 Sn433; Calibrated: 2010-01-15
- Phantom: SAM 1; Type: Twin SAM; Serial: TP-1144
- Measurement SW: DASY4, V4.7 Build 80; Postprocessing SW: SEMCAD, V1.8 Build 186

Mid Cheek/Area Scan (61x111x1): Measurement grid: dx=10mm, dy=10mm
Maximum value of SAR (interpolated) = 0.588 mW/g

Mid Cheek/Zoom Scan (5x5x7)/Cube 0: Measurement grid: dx=8mm, dy=8mm, dz=5mm
Reference Value = 12.9 V/m; Power Drift = -0.051 dB
Peak SAR (extrapolated) = 0.765 W/kg
SAR(1 g) = 0.522 mW/g; SAR(10 g) = 0.327 mW/g
Maximum value of SAR (measured) = 0.563 mW/g

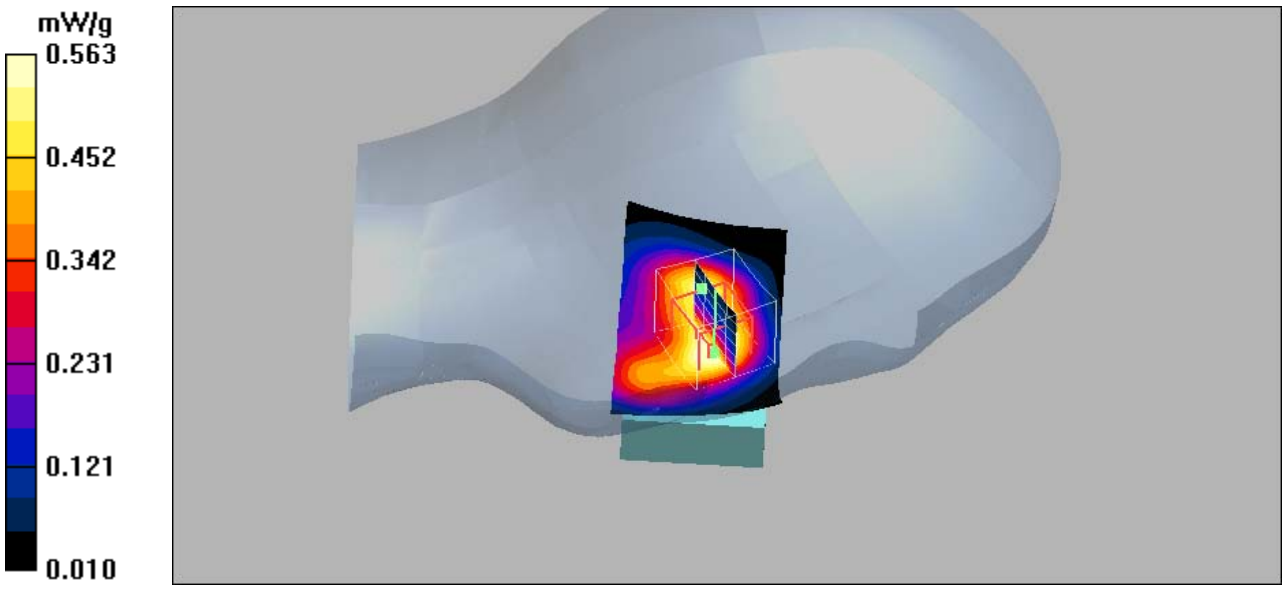

Date/Time: 2010-04-27 17:23:48

Test Laboratory: Sony Ericsson Mobile Communications AB

GSM1900 Left Tilt 100427

DUT: PY7A3880071; Type: GSM, UMTS, WLAN; Serial: #18137

Communication System: GSM 1900; Frequency: 1909.8 MHz;Duty Cycle: 1:8.3
Medium parameters used: f = 1910 MHz; σ = 1.48 mho/m; ε_r = 38.4; ρ = 1000 kg/m^3
Phantom section: Left Section
Measurement Standard: DASY4 (High Precision Assessment)

DASY4 Configuration:

- Probe: ES3DV3 - SN3062; ConvF(4.78, 4.78, 4.78); Calibrated: 2010-01-15
- Sensor-Surface: 4mm (Mechanical Surface Detection (Locations From Previous Scan Used))
  Sensor-Surface: 4mm (Mechanical Surface Detection)Sensor-Surface: 0mm (Fix Surface)
- Electronics: DAE3 Sn433; Calibrated: 2010-01-15
- Phantom: SAM 1; Type: Twin SAM; Serial: TP-1144
- Measurement SW: DASY4, V4.7 Build 80; Postprocessing SW: SEMCAD, V1.8 Build 186

High Tilt/Area Scan (61x111x1): Measurement grid: dx=10mm, dy=10mm
Maximum value of SAR (interpolated) = 0.882 mW/g
High Tilt/Zoom Scan (5x5x7)/Cube 0: Measurement grid: dx=8mm, dy=8mm, dz=5mm
Reference Value = 17.4 V/m; Power Drift = -0.026 dB
Peak SAR (extrapolated) = 1.34 W/kg
SAR(1 g) = 0.778 mW/g; SAR(10 g) = 0.433 mW/g
Maximum value of SAR (measured) = 0.859 mW/g
High Tilt/Z Scan (1x1x16): Measurement grid: dx=20mm, dy=20mm, dz=20mm
Maximum value of SAR (interpolated) = 0.146 mW/g

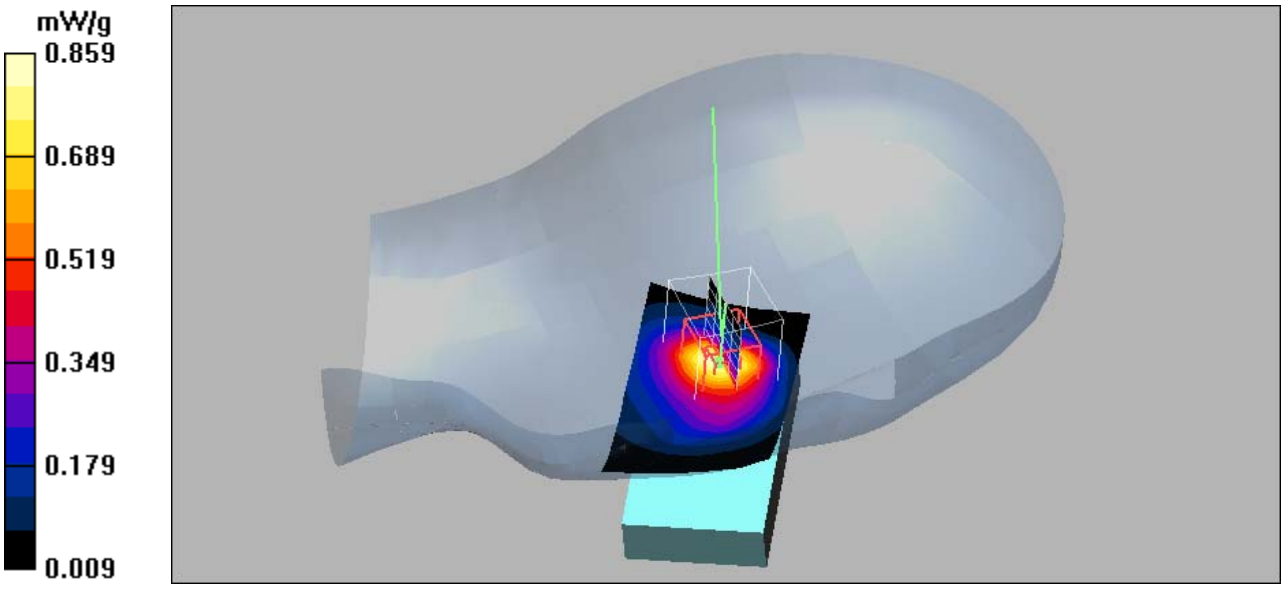

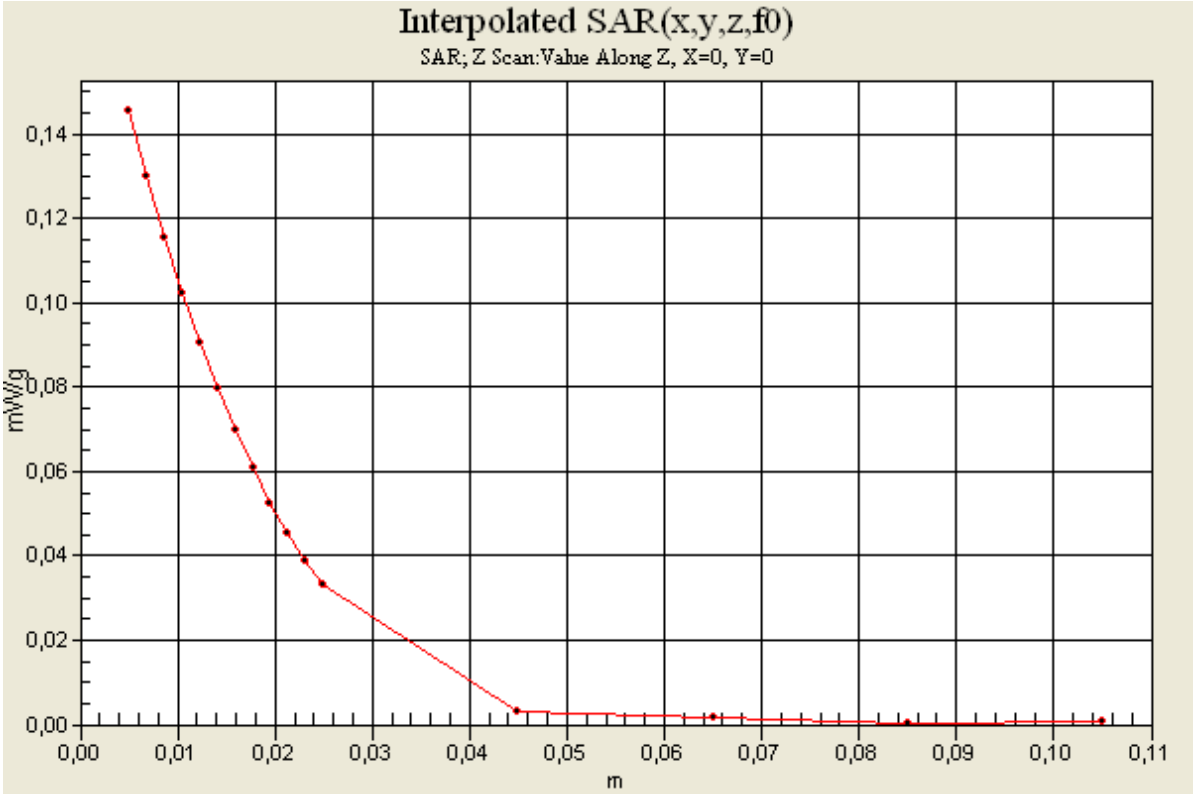
Interpolated SAR(x,y,z,f0)
SAR; Z Scan:Value Along Z, X=0, Y=0
mW/g
0,14
0,12
0,10
0,08
0,06
0,04
0,02
0,00
0,00
0,01
0,02
0,03
0,04
0,05
0,06
0,07
0,08
0,09
0,10
0,11
m

Date/Time: 2010-04-27 14:28:55

Test Laboratory: Sony Ericsson Mobile Communications AB

GSM1900 Right Cheek 100427

DUT: PY7A3880071; Type: GSM, UMTS, WLAN; Serial: #18137

Communication System: GSM 1900; Frequency: 1880 MHz;Duty Cycle: 1:8.3
Medium parameters used: f = 1880 MHz; σ = 1.43 mho/m; ε_r = 38.6; ρ = 1000 kg/m^3
Phantom section: Right Section
Measurement Standard: DASY4 (High Precision Assessment)

DASY4 Configuration:

- Probe: ES3DV3 - SN3062; ConvF(4.78, 4.78, 4.78); Calibrated: 2010-01-15
- Sensor-Surface: 4mm (Mechanical Surface Detection)
- Electronics: DAE3 Sn433; Calibrated: 2010-01-15
- Phantom: SAM 1; Type: Twin SAM; Serial: TP-1144
- Measurement SW: DASY4, V4.7 Build 80; Postprocessing SW: SEMCAD, V1.8 Build 186

Mid Cheek/Area Scan (61x111x1): Measurement grid: dx=10mm, dy=10mm
Maximum value of SAR (interpolated) = 0.539 mW/g

Mid Cheek/Zoom Scan (5x5x7)/Cube 0: Measurement grid: dx=8mm, dy=8mm, dz=5mm
Reference Value = 13.3 V/m; Power Drift = 0.001 dB
Peak SAR (extrapolated) = 0.746 W/kg
SAR(1 g) = 0.494 mW/g; SAR(10 g) = 0.324 mW/g
Maximum value of SAR (measured) = 0.528 mW/g

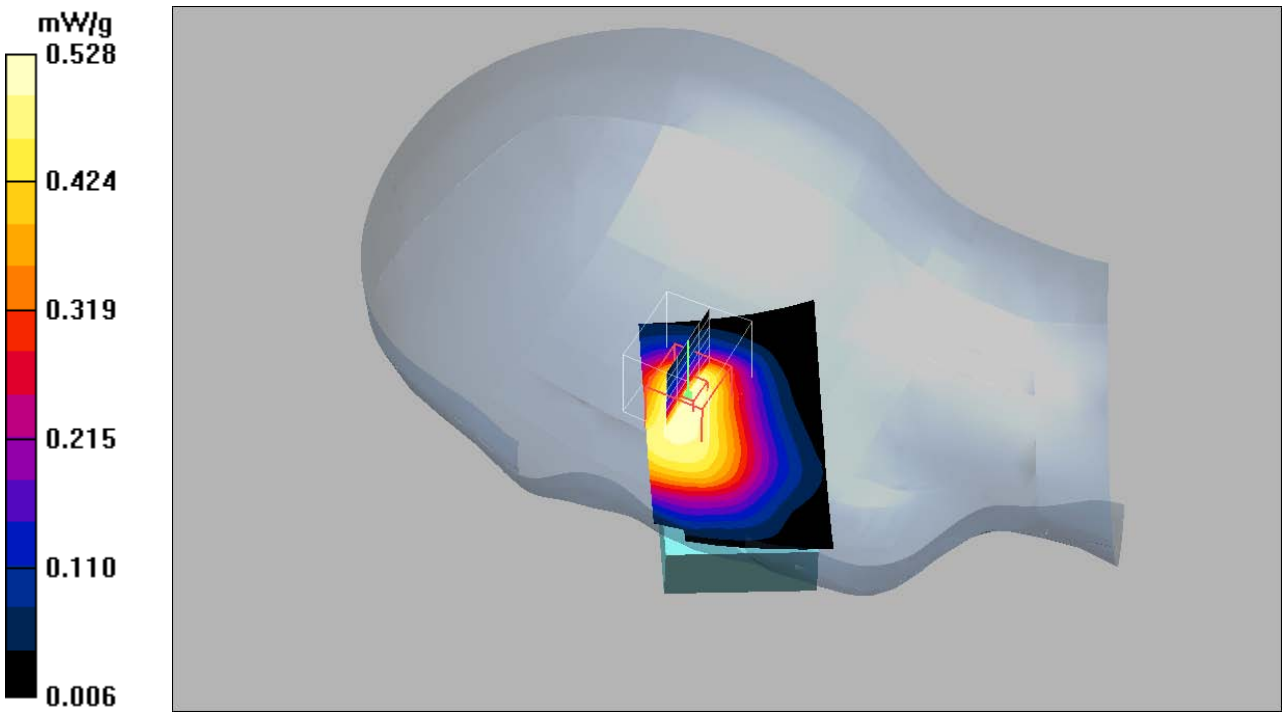

Date/Time: 2010-04-27 15:49:43

Test Laboratory: Sony Ericsson Mobile Communications AB

GSM1900 Right Tilt 100427

DUT: PY7A3880071; Type: GSM, UMTS, WLAN; Serial: #18137

Communication System: GSM 1900; Frequency: 1909.8 MHz;Duty Cycle: 1:8.3
Medium parameters used: f = 1910 MHz; σ = 1.48 mho/m; ε_r = 38.4; ρ = 1000 kg/m^3
Phantom section: Right Section
Measurement Standard: DASY4 (High Precision Assessment)

DASY4 Configuration:

- Probe: ES3DV3 - SN3062; ConvF(4.78, 4.78, 4.78); Calibrated: 2010-01-15
- Sensor-Surface: 4mm (Mechanical Surface Detection (Locations From Previous Scan Used))
  Sensor-Surface: 4mm (Mechanical Surface Detection)
- Electronics: DAE3 Sn433; Calibrated: 2010-01-15
- Phantom: SAM 1; Type: Twin SAM; Serial: TP-1144
- Measurement SW: DASY4, V4.7 Build 80; Postprocessing SW: SEMCAD, V1.8 Build 186

High Tilt/Area Scan (61x111x1): Measurement grid: dx=10mm, dy=10mm
Maximum value of SAR (interpolated) = 1.03 mW/g

High Tilt/Zoom Scan (5x5x7)/Cube 0: Measurement grid: dx=8mm, dy=8mm, dz=5mm
Reference Value = 20.0 V/m; Power Drift = -0.007 dB
Peak SAR (extrapolated) = 1.51 W/kg
SAR(1 g) = 0.881 mW/g; SAR(10 g) = 0.486 mW/g
Maximum value of SAR (measured) = 0.977 mW/g

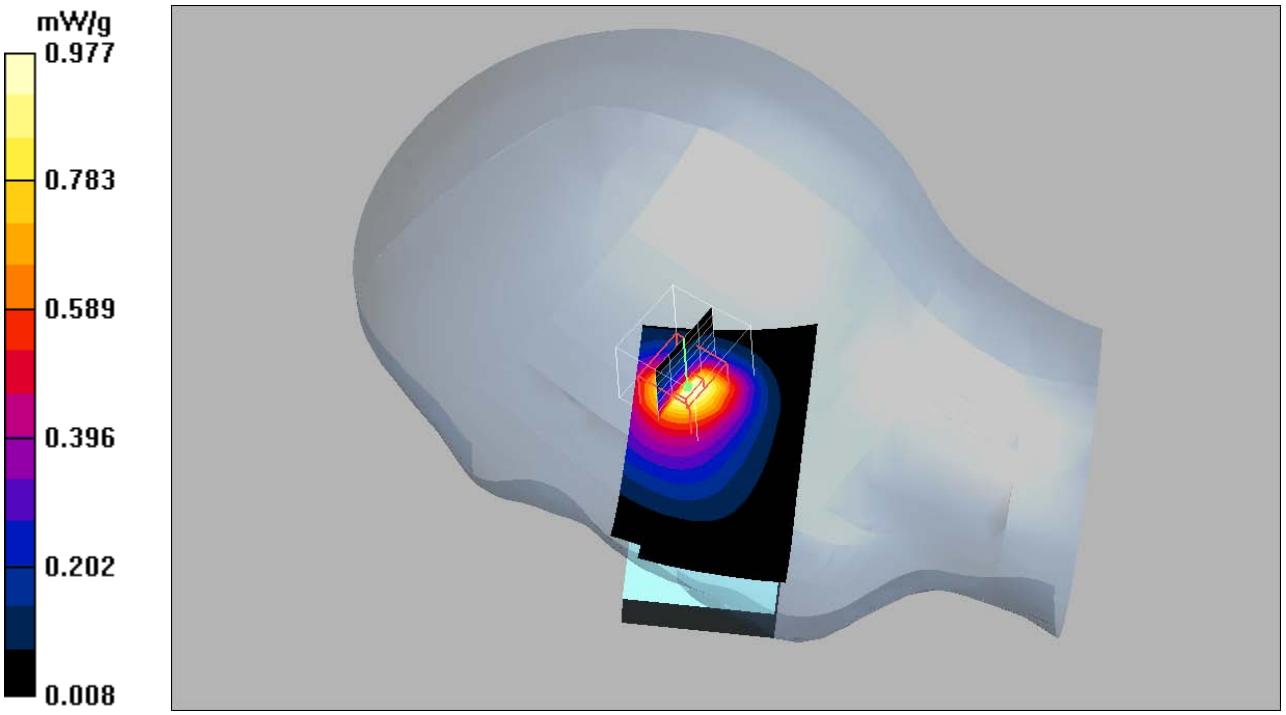

Date/Time: 2010-05-04 13:05:05

Test Laboratory: Sony Ericsson Mobile Communications AB

GSM1900 Body Speech 100504

DUT: PY7A3880071; Type: GSM, UMTS, WLAN; Serial: #18137

Communication System: GSM 1900; Frequency: 1880 MHz;Duty Cycle: 1:8.3
Medium parameters used: f = 1880 MHz; σ = 1.55 mho/m; ε_r = 52.1; ρ = 1000 kg/m^3
Phantom section: Flat Section
Measurement Standard: DASY4 (High Precision Assessment)

DASY4 Configuration:

- Probe: ES3DV3 - SN3062; ConvF(4.38, 4.38, 4.38); Calibrated: 2010-01-15
- Sensor-Surface: 4mm (Mechanical Surface Detection)
- Electronics: DAE3 Sn433; Calibrated: 2010-01-15
- Phantom: SAM 1; Type: Twin SAM; Serial: TP-1144
- Measurement SW: DASY4, V4.7 Build 80; Postprocessing SW: SEMCAD, V1.8 Build 186

Mid BT/Area Scan (61x111x1): Measurement grid: dx=10mm, dy=10mm
Maximum value of SAR (interpolated) = 0.406 mW/g

Mid BT/Zoom Scan (5x5x7)/Cube 0: Measurement grid: dx=8mm, dy=8mm, dz=5mm
Reference Value = 8.24 V/m; Power Drift = -0.022 dB
Peak SAR (extrapolated) = 0.569 W/kg
SAR(1 g) = 0.364 mW/g; SAR(10 g) = 0.213 mW/g
Maximum value of SAR (measured) = 0.403 mW/g

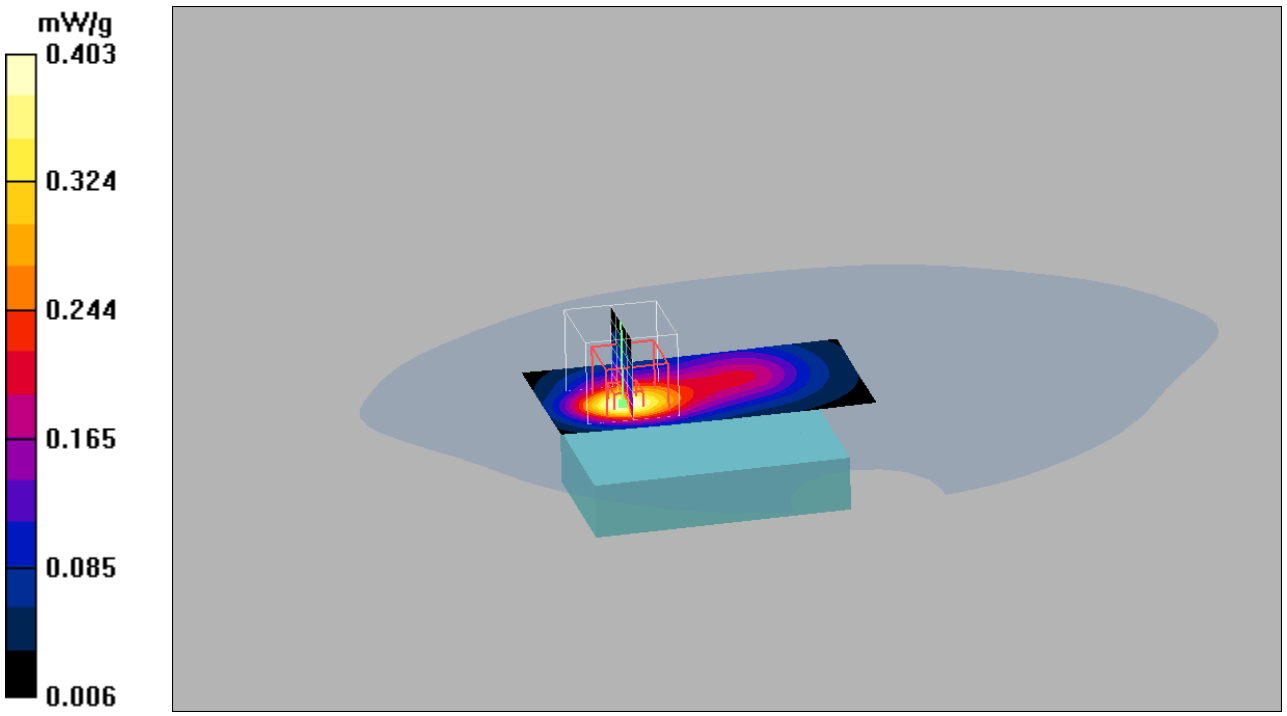

Date/Time: 2010-05-04 13:32:56

Test Laboratory: Sony Ericsson Mobile Communications AB

GSM1900 Body Speech PHF 100504

DUT: PY7A3880071; Type: GSM, UMTS, WLAN; Serial: #18137

Communication System: GSM 1900; Frequency: 1880 MHz;Duty Cycle: 1:8.3
Medium parameters used: f = 1880 MHz; σ = 1.55 mho/m; ε_r = 52.1; ρ = 1000 kg/m^3
Phantom section: Flat Section
Measurement Standard: DASY4 (High Precision Assessment)

DASY4 Configuration:

- Probe: ES3DV3 - SN3062; ConvF(4.38, 4.38, 4.38); Calibrated: 2010-01-15
- Sensor-Surface: 4mm (Mechanical Surface Detection (Locations From Previous Scan Used))
  Sensor-Surface: 4mm (Mechanical Surface Detection)
- Electronics: DAE3 Sn433; Calibrated: 2010-01-15
- Phantom: SAM 1; Type: Twin SAM; Serial: TP-1144
- Measurement SW: DASY4, V4.7 Build 80; Postprocessing SW: SEMCAD, V1.8 Build 186

Mid PHF/Area Scan (61x111x1): Measurement grid: dx=10mm, dy=10mm
Maximum value of SAR (interpolated) = 0.450 mW/g

Mid PHF/Zoom Scan (5x5x7)/Cube 0: Measurement grid: dx=8mm, dy=8mm, dz=5mm
Reference Value = 7.84 V/m; Power Drift = 0.043 dB
Peak SAR (extrapolated) = 0.644 W/kg
SAR(1 g) = 0.412 mW/g; SAR(10 g) = 0.240 mW/g
Maximum value of SAR (measured) = 0.459 mW/g

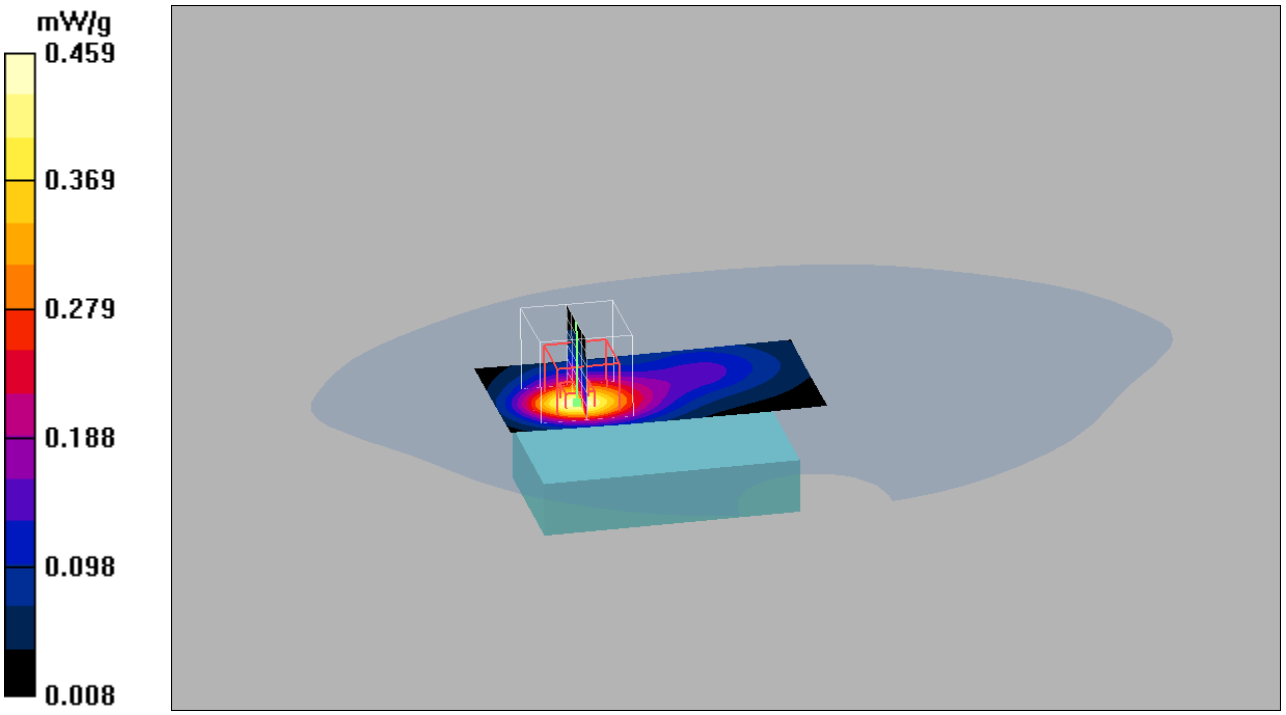

Date/Time: 2010-05-04 15:36:09

Test Laboratory: Sony Ericsson Mobile Communications AB

GSM1900 Body GPRS 2TX 100504

DUT: PY7A3880071; Type: GSM, UMTS, WLAN; Serial: #18137

Communication System: GSM1900 GPRS2TX; Frequency: 1909.8 MHz;Duty Cycle: 1:4.15
Medium parameters used: f = 1910 MHz; σ = 1.59 mho/m; ε_r = 52.4; ρ = 1000 kg/m^3
Phantom section: Flat Section
Measurement Standard: DASY4 (High Precision Assessment)

DASY4 Configuration:

- Probe: ES3DV3 - SN3062; ConvF(4.38, 4.38, 4.38); Calibrated: 2010-01-15
- Sensor-Surface: 4mm (Mechanical Surface Detection (Locations From Previous Scan Used))
  Sensor-Surface: 4mm (Mechanical Surface Detection)Sensor-Surface: 0mm (Fix Surface)
- Electronics: DAE3 Sn433; Calibrated: 2010-01-15
- Phantom: SAM 1; Type: Twin SAM; Serial: TP-1144
- Measurement SW: DASY4, V4.7 Build 80; Postprocessing SW: SEMCAD, V1.8 Build 186

High/Area Scan (61x111x1): Measurement grid: dx=10mm, dy=10mm
Maximum value of SAR (interpolated) = 0.606 mW/g
High/Zoom Scan (5x5x7)/Cube 0: Measurement grid: dx=8mm, dy=8mm, dz=5mm
Reference Value = 11.1 V/m; Power Drift = 0.058 dB
Peak SAR (extrapolated) = 0.872 W/kg
SAR(1 g) = 0.547 mW/g; SAR(10 g) = 0.314 mW/g
Maximum value of SAR (measured) = 0.608 mW/g
High/Z Scan (1x1x16): Measurement grid: dx=20mm, dy=20mm, dz=20mm
Maximum value of SAR (interpolated) = 0.012 mW/g

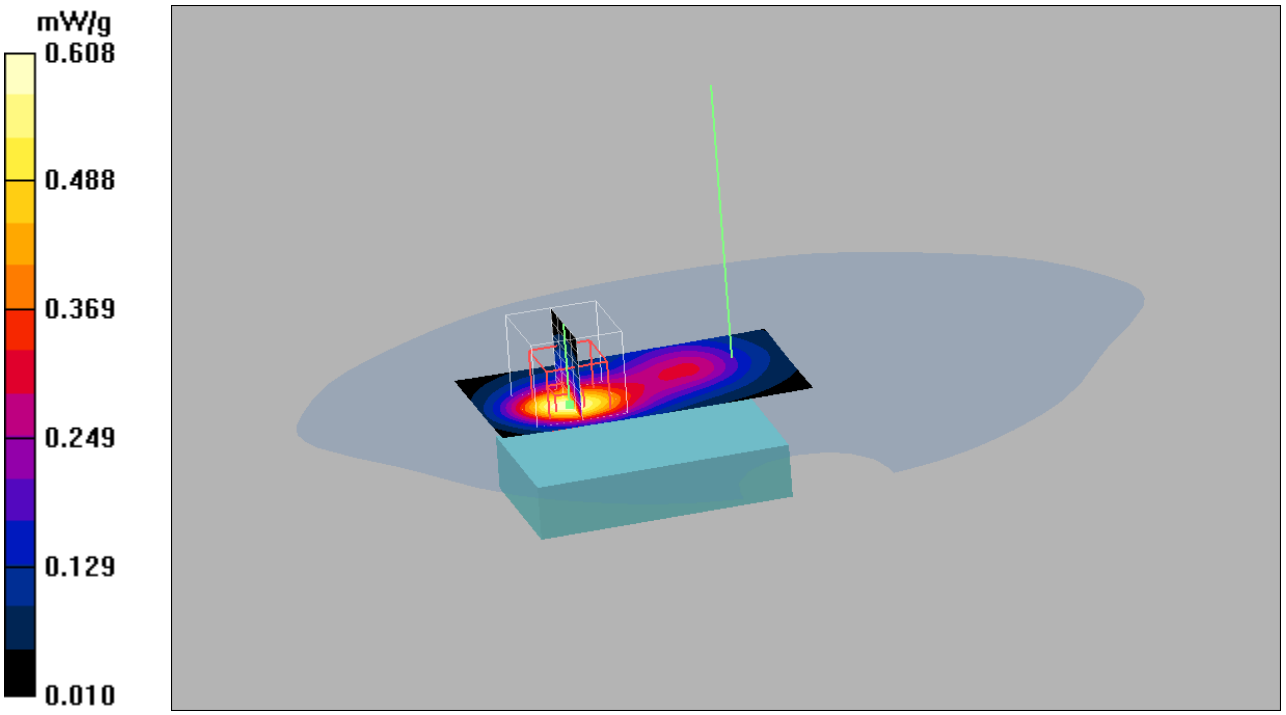

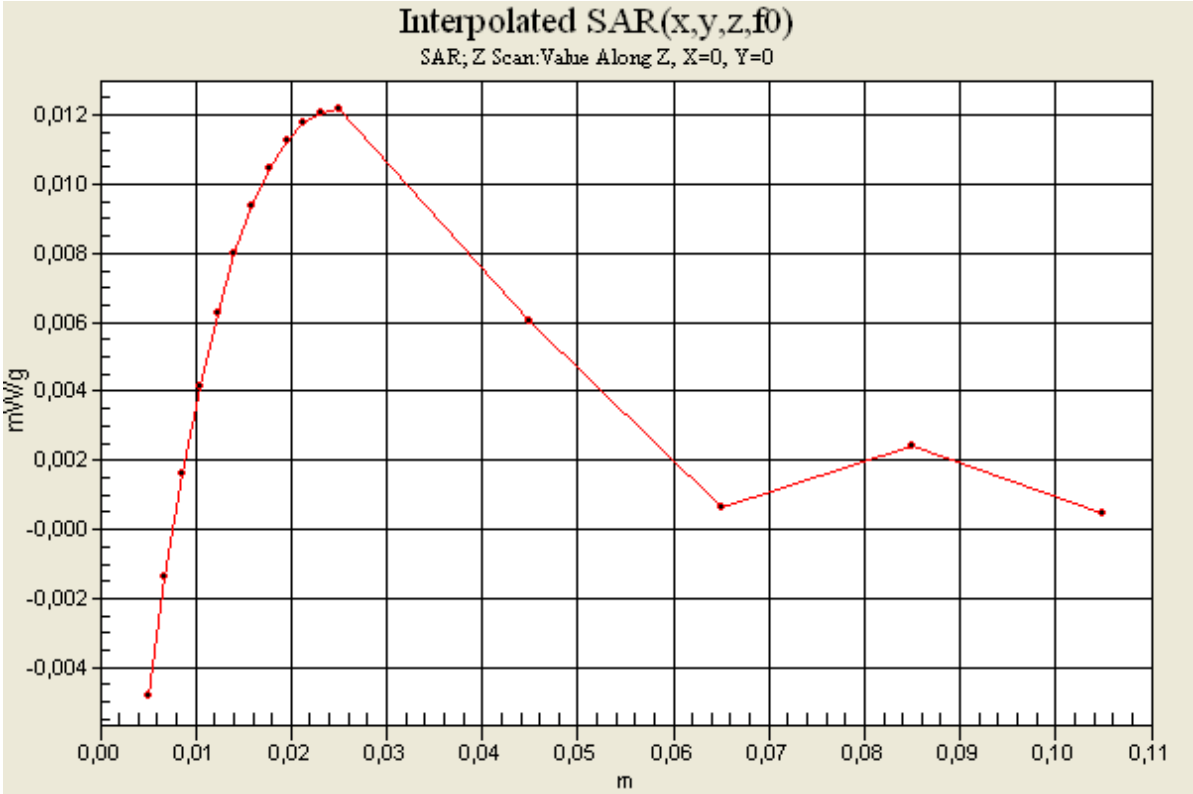
Interpolated SAR(x,y,z,f0)
SAR; Z Scan:Value Along Z, X=0, Y=0
mW/g
0,012
0,010
0,008
0,006
0,004
0,002
-0,000
-0,002
-0,004
0,00
0,01
0,02
0,03
0,04
0,05
0,06
0,07
0,08
0,09
0,10
0,11
m

Date/Time: 2010-05-04 16:52:47

Test Laboratory: Sony Ericsson Mobile Communications AB

GSM1900 Body Front GPRS 2TX 100504

DUT: PY7A3880071; Type: GSM, UMTS, WLAN; Serial: #18137

Communication System: GSM1900 GPRS2TX; Frequency: 1909.8 MHz;Duty Cycle: 1:4.15
Medium parameters used: f = 1910 MHz; σ = 1.59 mho/m; ε_r = 52.4; ρ = 1000 kg/m^3
Phantom section: Flat Section
Measurement Standard: DASY4 (High Precision Assessment)

DASY4 Configuration:

- Probe: ES3DV3 - SN3062; ConvF(4.38, 4.38, 4.38); Calibrated: 2010-01-15
- Sensor-Surface: 4mm (Mechanical Surface Detection (Locations From Previous Scan Used))
  Sensor-Surface: 4mm (Mechanical Surface Detection)
- Electronics: DAE3 Sn433; Calibrated: 2010-01-15
- Phantom: SAM 1; Type: Twin SAM; Serial: TP-1144
- Measurement SW: DASY4, V4.7 Build 80; Postprocessing SW: SEMCAD, V1.8 Build 186

High, Front/Area Scan (61x111x1): Measurement grid: dx=10mm, dy=10mm
Maximum value of SAR (interpolated) = 0.426 mW/g

High, Front/Zoom Scan (5x5x7)/Cube 0: Measurement grid: dx=8mm, dy=8mm, dz=5mm
Reference Value = 14.4 V/m; Power Drift = -0.055 dB
Peak SAR (extrapolated) = 0.561 W/kg
SAR(1 g) = 0.386 mW/g; SAR(10 g) = 0.246 mW/g
Maximum value of SAR (measured) = 0.418 mW/g

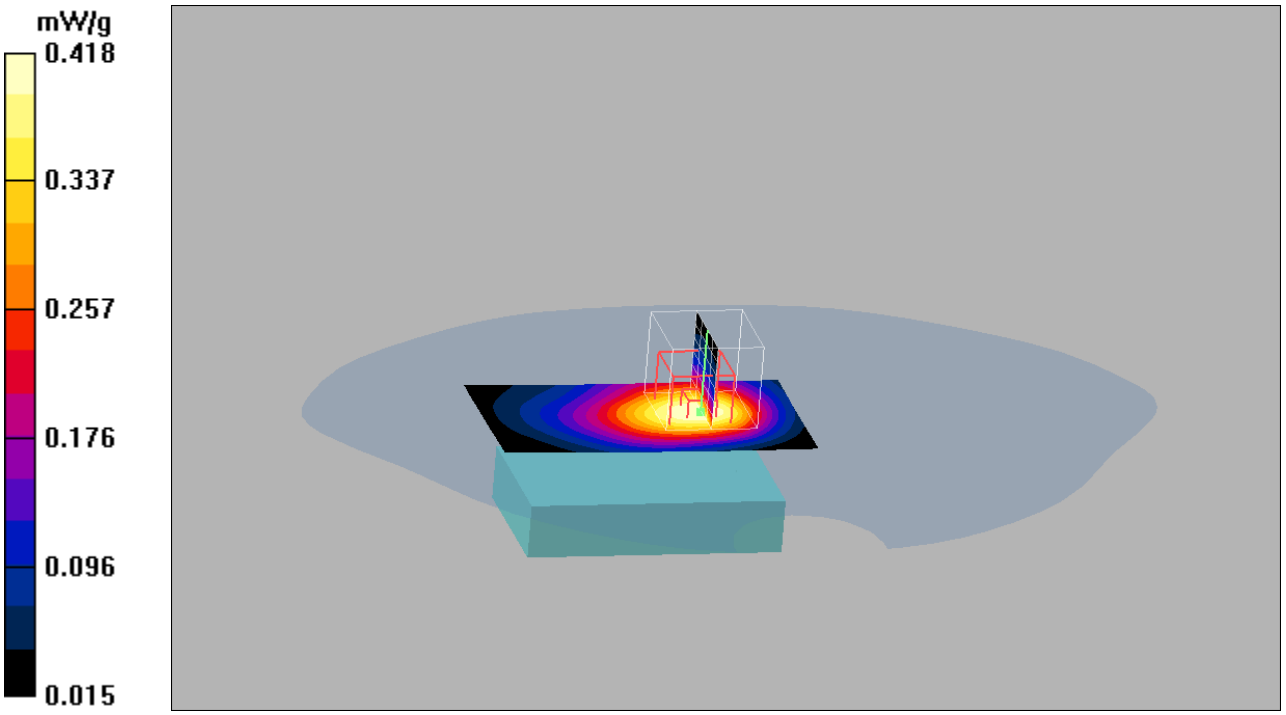

Date/Time: 2010-04-27 11:42:29

Test Laboratory: Sony Ericsson Mobile Communications AB

UMTS2 Left Cheek 100427

DUT: PY7A3880071; Type: GSM, UMTS, WLAN; Serial: #18137

Communication System: UMTS_band2; Frequency: 1907.6 MHz;Duty Cycle: 1:1
Medium parameters used (interpolated): f = 1907.6 MHz; σ = 1.47 mho/m; ε_r = 38.4; ρ = 1000 kg/m^3
Phantom section: Left Section
Measurement Standard: DASY4 (High Precision Assessment)

DASY4 Configuration:

- Probe: ES3DV3 - SN3062; ConvF(4.78, 4.78, 4.78); Calibrated: 2010-01-15
- Sensor-Surface: 4mm (Mechanical Surface Detection (Locations From Previous Scan Used))
  Sensor-Surface: 4mm (Mechanical Surface Detection)
- Electronics: DAE3 Sn433; Calibrated: 2010-01-15
- Phantom: SAM 1; Type: Twin SAM; Serial: TP-1144
- Measurement SW: DASY4, V4.7 Build 80; Postprocessing SW: SEMCAD, V1.8 Build 186

High Cheek/Area Scan (61x111x1): Measurement grid: dx=10mm, dy=10mm
Maximum value of SAR (interpolated) = 1.09 mW/g

High Cheek/Zoom Scan (5x5x7)/Cube 0: Measurement grid: dx=8mm, dy=8mm, dz=5mm
Reference Value = 20.6 V/m; Power Drift = -0.028 dB
Peak SAR (extrapolated) = 1.51 W/kg
SAR(1 g) = 0.974 mW/g; SAR(10 g) = 0.607 mW/g
Maximum value of SAR (measured) = 1.06 mW/g

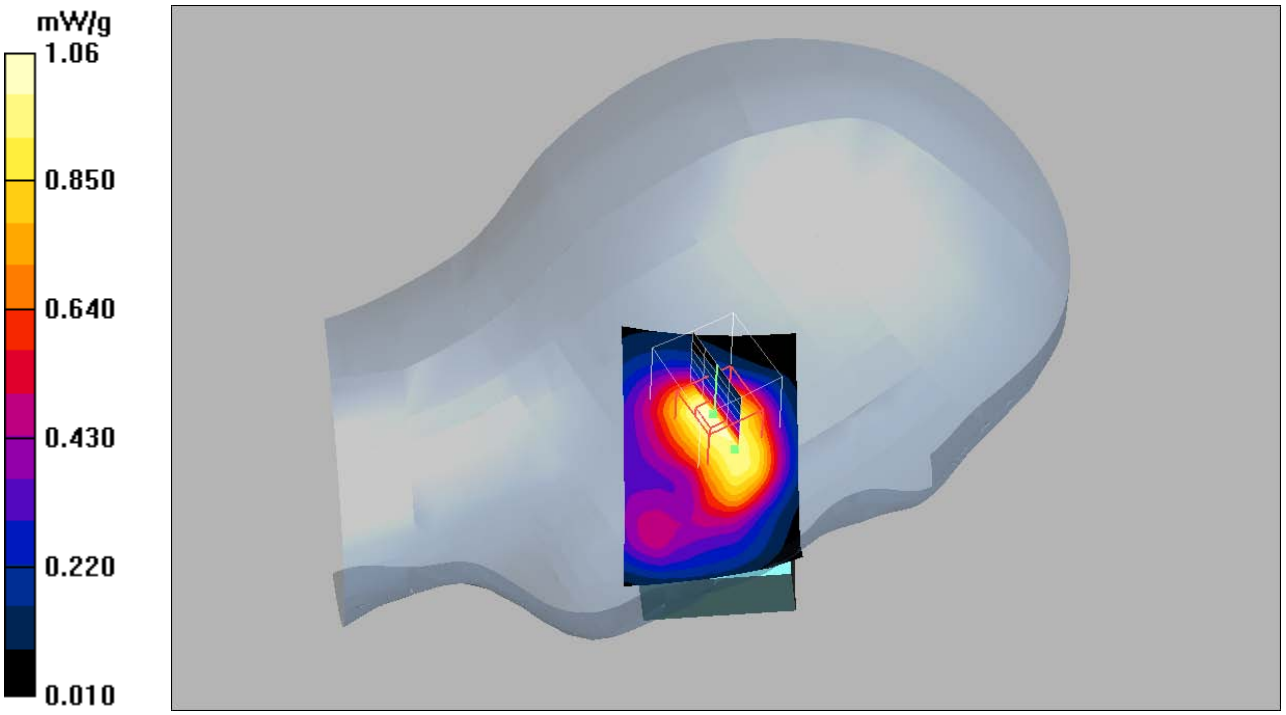

Date/Time: 2010-04-27 11:16:26

Test Laboratory: Sony Ericsson Mobile Communications AB

UMTS2 Left Tilt 100427

DUT: PY7A3880071; Type: GSM, UMTS, WLAN; Serial: #18137

Communication System: UMTS_band2; Frequency: 1907.6 MHz;Duty Cycle: 1:1
Medium parameters used (interpolated): f = 1907.6 MHz; σ = 1.47 mho/m; ε_r = 38.4; ρ = 1000 kg/m^3
Phantom section: Left Section
Measurement Standard: DASY4 (High Precision Assessment)

DASY4 Configuration:

- Probe: ES3DV3 - SN3062; ConvF(4.78, 4.78, 4.78); Calibrated: 2010-01-15
- Sensor-Surface: 4mm (Mechanical Surface Detection (Locations From Previous Scan Used))
  Sensor-Surface: 4mm (Mechanical Surface Detection)
- Electronics: DAE3 Sn433; Calibrated: 2010-01-15
- Phantom: SAM 1; Type: Twin SAM; Serial: TP-1144
- Measurement SW: DASY4, V4.7 Build 80; Postprocessing SW: SEMCAD, V1.8 Build 186

High Tilt/Area Scan (61x111x1): Measurement grid: dx=10mm, dy=10mm
Maximum value of SAR (interpolated) = 1.53 mW/g

High Tilt/Zoom Scan (5x5x7)/Cube 0: Measurement grid: dx=8mm, dy=8mm, dz=5mm
Reference Value = 28.0 V/m; Power Drift = 0.010 dB
Peak SAR (extrapolated) = 2.28 W/kg
SAR(1 g) = 1.36 mW/g; SAR(10 g) = 0.763 mW/g
Maximum value of SAR (measured) = 1.48 mW/g

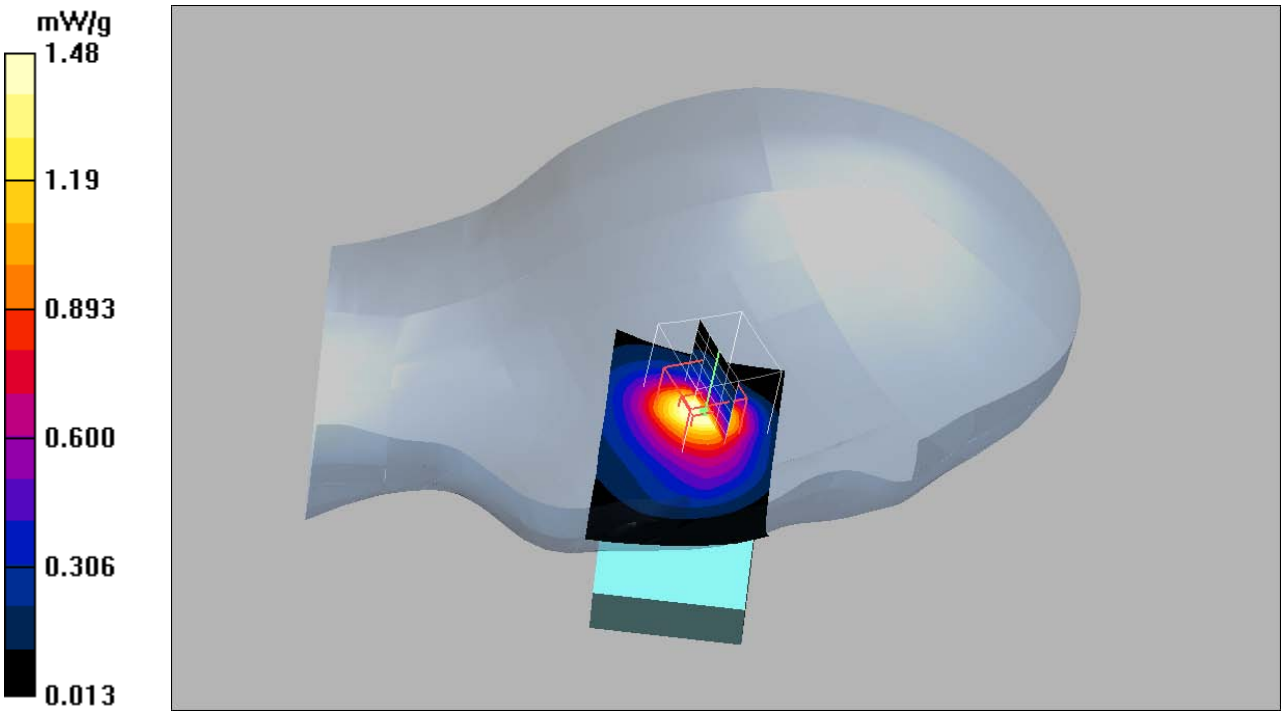

Date/Time: 2010-04-27 14:04:02

Test Laboratory: Sony Ericsson Mobile Communications AB

UMTS2 Right Cheek 100427

DUT: PY7A3880071; Type: GSM, UMTS, WLAN; Serial: #18137

Communication System: UMTS_band2; Frequency: 1907.6 MHz;Duty Cycle: 1:1
Medium parameters used (interpolated): f = 1907.6 MHz; σ = 1.47 mho/m; ε_r = 38.4; ρ = 1000 kg/m^3
Phantom section: Right Section
Measurement Standard: DASY4 (High Precision Assessment)

DASY4 Configuration:

- Probe: ES3DV3 - SN3062; ConvF(4.78, 4.78, 4.78); Calibrated: 2010-01-15
- Sensor-Surface: 4mm (Mechanical Surface Detection (Locations From Previous Scan Used))
  Sensor-Surface: 4mm (Mechanical Surface Detection)
- Electronics: DAE3 Sn433; Calibrated: 2010-01-15
- Phantom: SAM 1; Type: Twin SAM; Serial: TP-1144
- Measurement SW: DASY4, V4.7 Build 80; Postprocessing SW: SEMCAD, V1.8 Build 186

High Cheek/Area Scan (61x111x1): Measurement grid: dx=10mm, dy=10mm
Maximum value of SAR (interpolated) = 1.06 mW/g

High Cheek/Zoom Scan (5x5x7)/Cube 0: Measurement grid: dx=8mm, dy=8mm, dz=5mm
Reference Value = 19.7 V/m; Power Drift = 0.013 dB
Peak SAR (extrapolated) = 1.49 W/kg
SAR(1 g) = 0.957 mW/g; SAR(10 g) = 0.597 mW/g
Maximum value of SAR (measured) = 1.03 mW/g

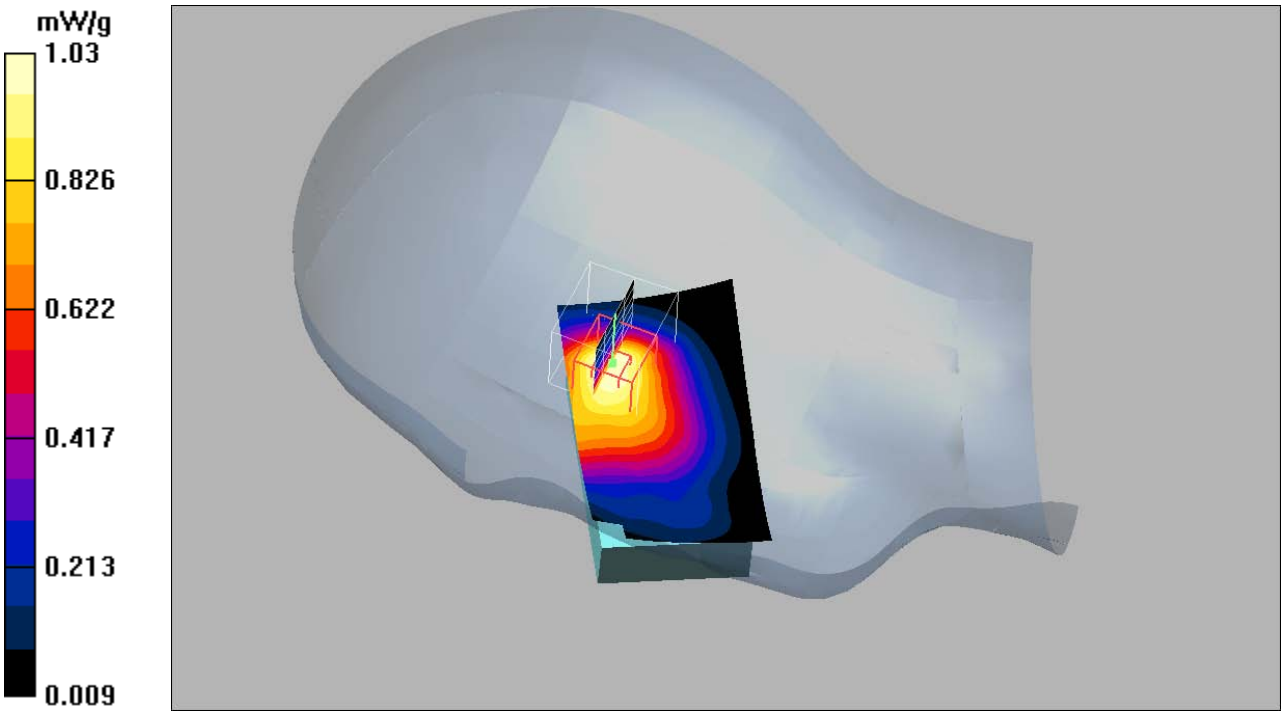

Date/Time: 2010-04-27 12:42:20

Test Laboratory: Sony Ericsson Mobile Communications AB

UMTS2 Right Tilt 100427

DUT: PY7A3880071; Type: GSM, UMTS, WLAN; Serial: #18137

Communication System: UMTS_band2; Frequency: 1880 MHz;Duty Cycle: 1:1
Medium parameters used: f = 1880 MHz; σ = 1.43 mho/m; ε_r = 38.6; ρ = 1000 kg/m^3
Phantom section: Right Section
Measurement Standard: DASY4 (High Precision Assessment)

DASY4 Configuration:

- Probe: ES3DV3 - SN3062; ConvF(4.78, 4.78, 4.78); Calibrated: 2010-01-15
- Sensor-Surface: 4mm (Mechanical Surface Detection (Locations From Previous Scan Used))
  Sensor-Surface: 4mm (Mechanical Surface Detection)Sensor-Surface: 0mm (Fix Surface)
- Electronics: DAE3 Sn433; Calibrated: 2010-01-15
- Phantom: SAM 1; Type: Twin SAM; Serial: TP-1144
- Measurement SW: DASY4, V4.7 Build 80; Postprocessing SW: SEMCAD, V1.8 Build 186

Mid Tilt/Area Scan (61x111x1): Measurement grid: dx=10mm, dy=10mm
Maximum value of SAR (interpolated) = 1.83 mW/g
Mid Tilt/Zoom Scan (5x5x7)/Cube 0: Measurement grid: dx=8mm, dy=8mm, dz=5mm
Reference Value = 29.6 V/m; Power Drift = -0.104 dB
Peak SAR (extrapolated) = 2.46 W/kg
SAR(1 g) = 1.48 mW/g; SAR(10 g) = 0.832 mW/g
Maximum value of SAR (measured) = 1.64 mW/g
Mid Tilt/Z Scan (1x1x16): Measurement grid: dx=20mm, dy=20mm, dz=20mm
Maximum value of SAR (interpolated) = 0.264 mW/g

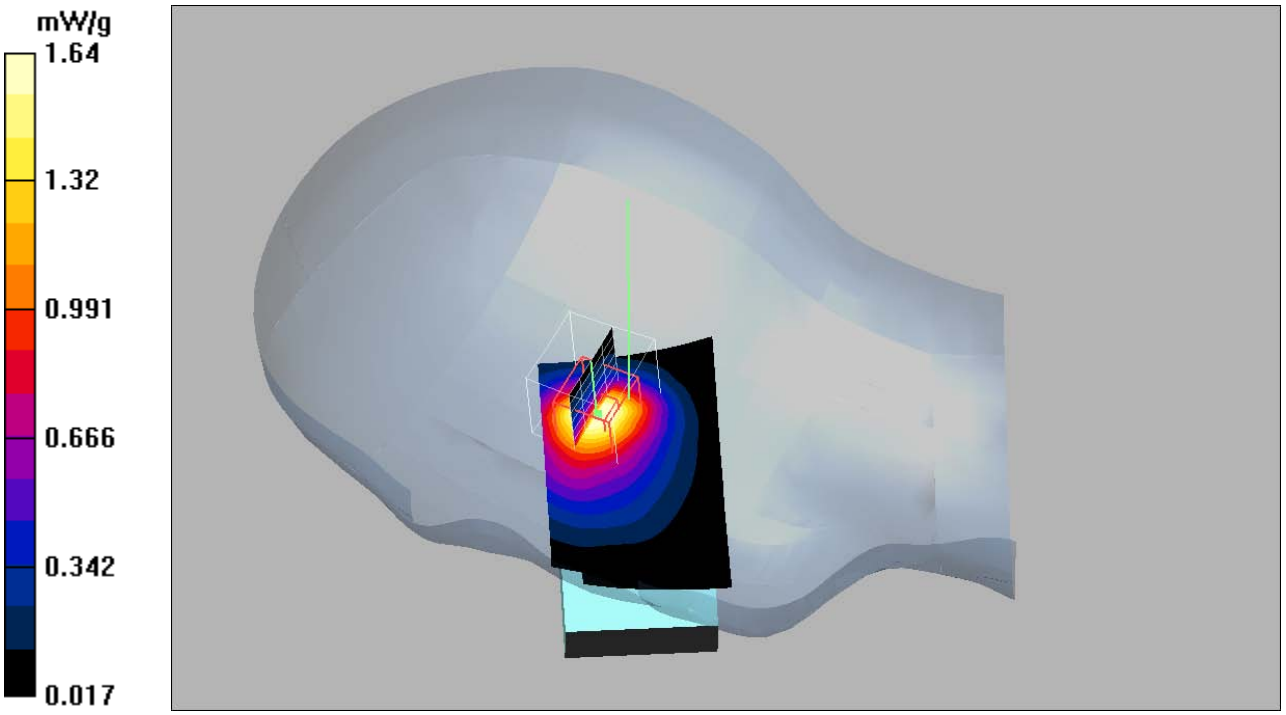

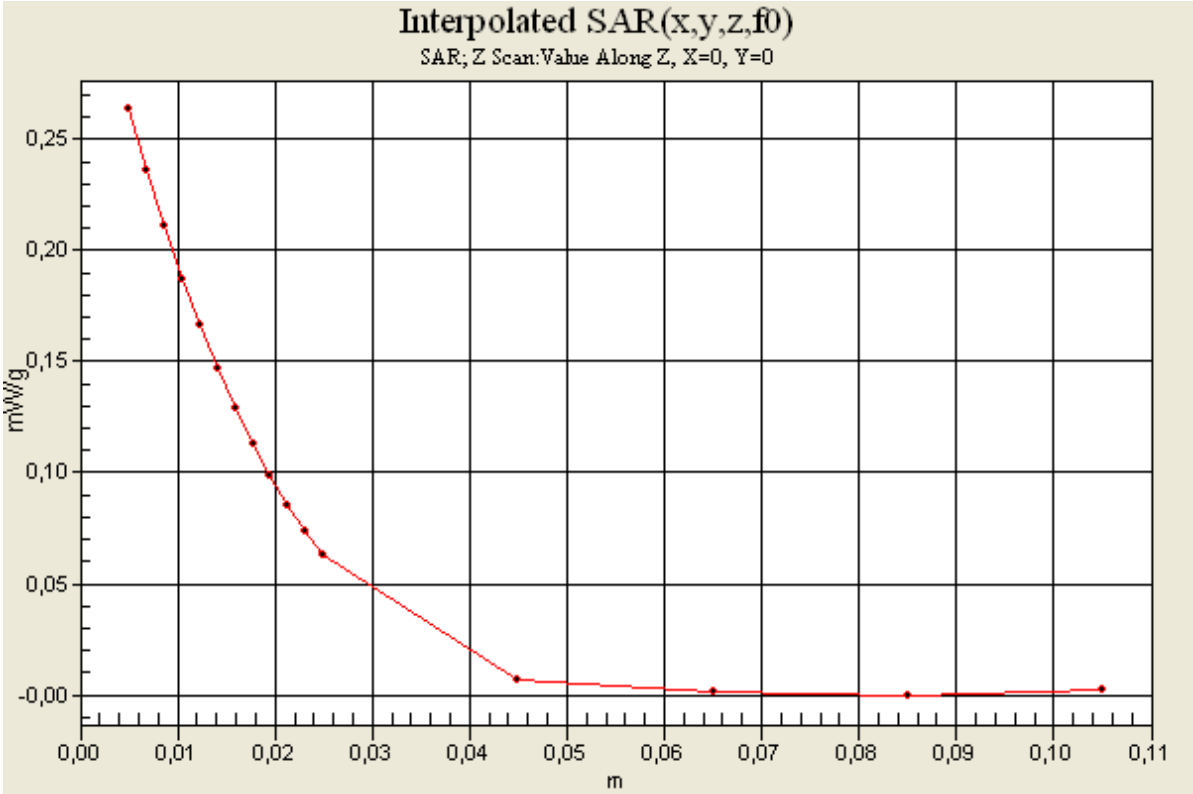
Interpolated SAR(x,y,z,f0)
SAR; Z Scan:Value Along Z, X=0, Y=0
mW/g
0,25
0,20
0,15
0,10
0,05
-0,00
0,00
0,01
0,02
0,03
0,04
0,05
0,06
0,07
0,08
0,09
0,10
0,11
m

Date/Time: 2010-05-04 17:17:03

Test Laboratory: Sony Ericsson Mobile Communications AB

UMTS2 Body Speech 100504

DUT: PY7A3880071; Type: GSM, UMTS, WLAN; Serial: #18137

Communication System: UMTS_band2; Frequency: 1907.6 MHz;Duty Cycle: 1:1
Medium parameters used (interpolated): f = 1907.6 MHz; σ = 1.59 mho/m; ε_r = 52.3; ρ = 1000 kg/m^3
Phantom section: Flat Section
Measurement Standard: DASY4 (High Precision Assessment)

DASY4 Configuration:

- Probe: ES3DV3 - SN3062; ConvF(4.38, 4.38, 4.38); Calibrated: 2010-01-15
- Sensor-Surface: 4mm (Mechanical Surface Detection)
- Electronics: DAE3 Sn433; Calibrated: 2010-01-15
- Phantom: SAM 1; Type: Twin SAM; Serial: TP-1144
- Measurement SW: DASY4, V4.7 Build 80; Postprocessing SW: SEMCAD, V1.8 Build 186

High, BT/Area Scan (61x111x1): Measurement grid: dx=10mm, dy=10mm
Maximum value of SAR (interpolated) = 0.744 mW/g

High, BT/Zoom Scan (5x5x7)/Cube 0: Measurement grid: dx=8mm, dy=8mm, dz=5mm
Reference Value = 11.8 V/m; Power Drift = 0.084 dB
Peak SAR (extrapolated) = 1.06 W/kg
SAR(1 g) = 0.676 mW/g; SAR(10 g) = 0.392 mW/g
Maximum value of SAR (measured) = 0.744 mW/g

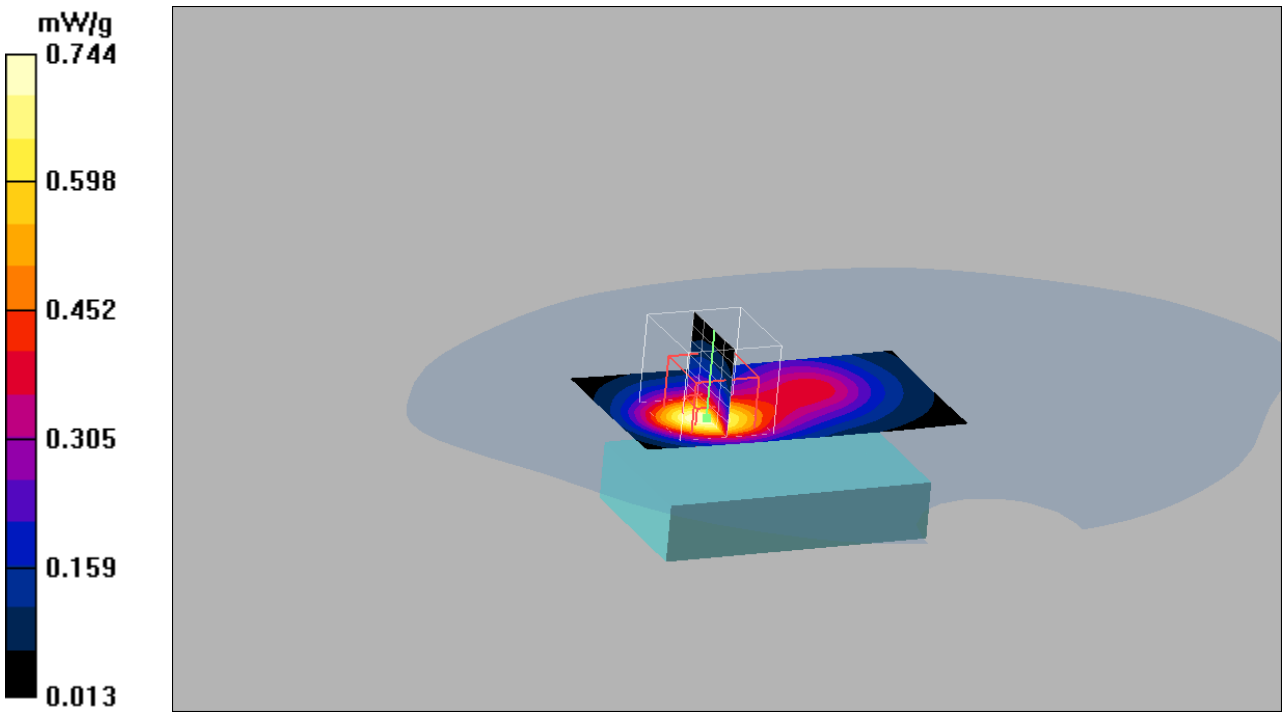

Date/Time: 2010-05-04 17:32:40

Test Laboratory: Sony Ericsson Mobile Communications AB

UMTS2 Body Speech PHF 100504

DUT: PY7A3880071; Type: GSM, UMTS, WLAN; Serial: #18137

Communication System: UMTS_band2; Frequency: 1907.6 MHz;Duty Cycle: 1:1
Medium parameters used (interpolated): f = 1907.6 MHz; σ = 1.59 mho/m; ε_r = 52.3; ρ = 1000 kg/m^3
Phantom section: Flat Section
Measurement Standard: DASY4 (High Precision Assessment)

DASY4 Configuration:

- Probe: ES3DV3 - SN3062; ConvF(4.38, 4.38, 4.38); Calibrated: 2010-01-15
- Sensor-Surface: 4mm (Mechanical Surface Detection (Locations From Previous Scan Used))
  Sensor-Surface: 4mm (Mechanical Surface Detection)Sensor-Surface: 0mm (Fix Surface)
- Electronics: DAE3 Sn433; Calibrated: 2010-01-15
- Phantom: SAM 1; Type: Twin SAM; Serial: TP-1144
- Measurement SW: DASY4, V4.7 Build 80; Postprocessing SW: SEMCAD, V1.8 Build 186

High, PHF/Area Scan (61x111x1): Measurement grid: dx=10mm, dy=10mm
Maximum value of SAR (interpolated) = 0.769 mW/g
High, PHF/Zoom Scan (5x5x7)/Cube 0: Measurement grid: dx=8mm, dy=8mm, dz=5mm
Reference Value = 9.54 V/m; Power Drift = 0.205 dB
Peak SAR (extrapolated) = 1.12 W/kg
SAR(1 g) = 0.708 mW/g; SAR(10 g) = 0.412 mW/g
Maximum value of SAR (measured) = 0.783 mW/g
High, PHF/Z Scan (1x1x16): Measurement grid: dx=20mm, dy=20mm, dz=20mm
Maximum value of SAR (interpolated) = 0.010 mW/g

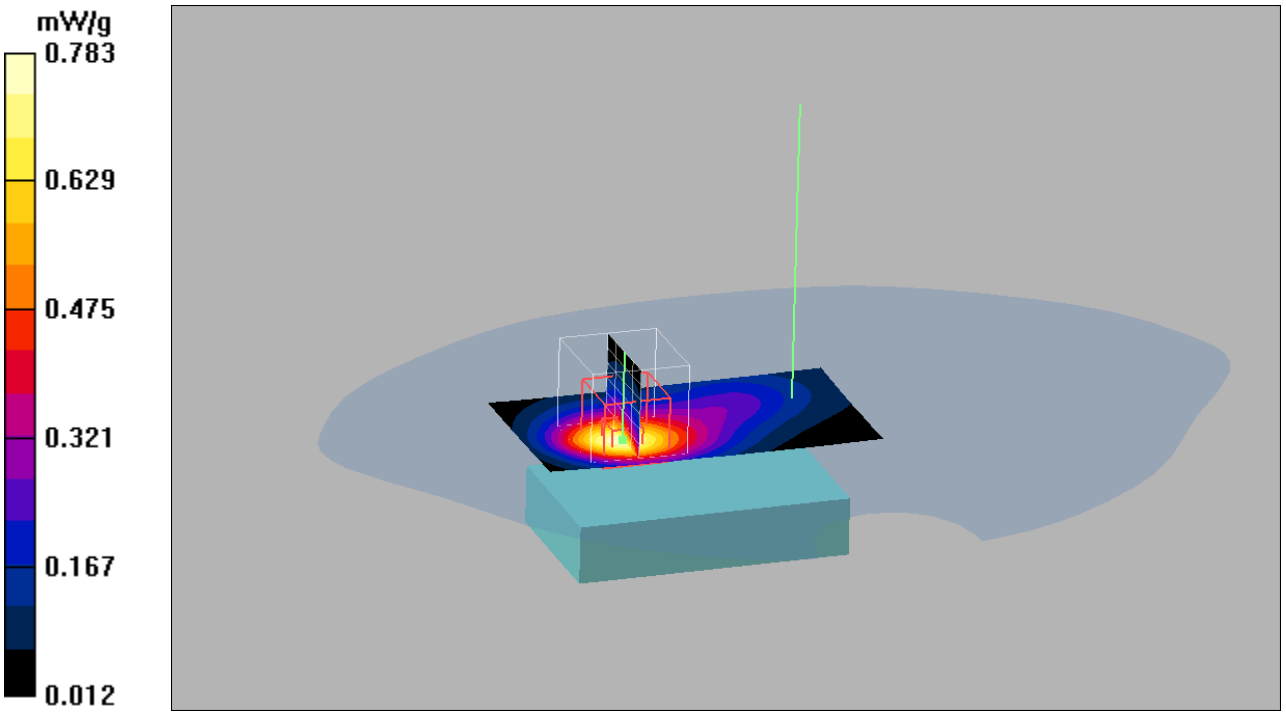

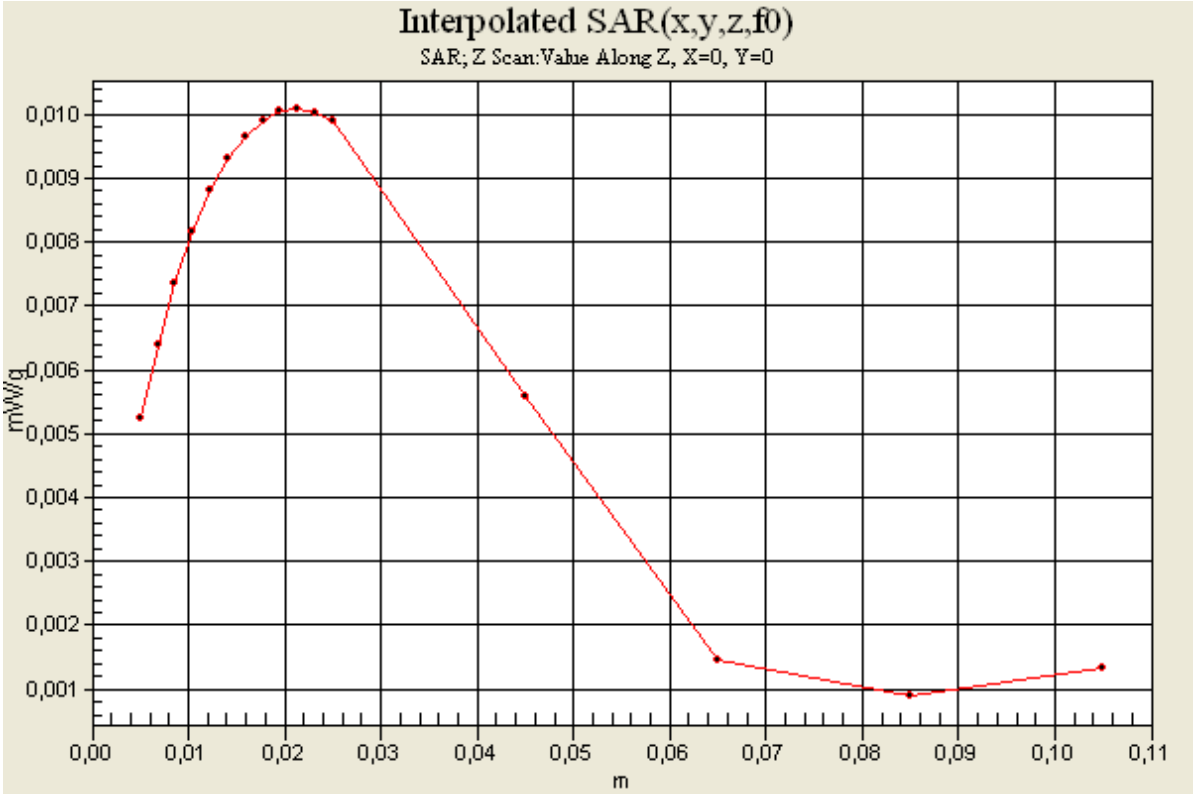
Interpolated SAR(x,y,z,f0)
SAR; Z Scan:Value Along Z, X=0, Y=0
mW/g
0,010
0,009
0,008
0,007
0,006
0,005
0,004
0,003
0,002
0,001
0,00
0,01
0,02
0,03
0,04
0,05
0,06
0,07
0,08
0,09
0,10
0,11
m

Date/Time: 2010-05-04 18:41:46

Test Laboratory: Sony Ericsson Mobile Communications AB

UMTS2 Body Front Speech PHF 100504

DUT: PY7A3880071; Type: GSM, UMTS, WLAN; Serial: #18137

Communication System: UMTS_band2; Frequency: 1907.6 MHz;Duty Cycle: 1:1
Medium parameters used (interpolated): f = 1907.6 MHz; σ = 1.59 mho/m; ε_r = 52.3; ρ = 1000 kg/m^3
Phantom section: Flat Section
Measurement Standard: DASY4 (High Precision Assessment)

DASY4 Configuration:

- Probe: ES3DV3 - SN3062; ConvF(4.38, 4.38, 4.38); Calibrated: 2010-01-15
- Sensor-Surface: 4mm (Mechanical Surface Detection (Locations From Previous Scan Used))
  Sensor-Surface: 4mm (Mechanical Surface Detection)
- Electronics: DAE3 Sn433; Calibrated: 2010-01-15
- Phantom: SAM 1; Type: Twin SAM; Serial: TP-1144
- Measurement SW: DASY4, V4.7 Build 80; Postprocessing SW: SEMCAD, V1.8 Build 186

Front, PHF/Area Scan (61x111x1): Measurement grid: dx=10mm, dy=10mm
Maximum value of SAR (interpolated) = 0.434 mW/g

Front, PHF/Zoom Scan (5x5x7)/Cube 0: Measurement grid: dx=8mm, dy=8mm, dz=5mm
Reference Value = 14.7 V/m; Power Drift = -0.108 dB
Peak SAR (extrapolated) = 0.570 W/kg
SAR(1 g) = 0.389 mW/g; SAR(10 g) = 0.247 mW/g
Maximum value of SAR (measured) = 0.421 mW/g

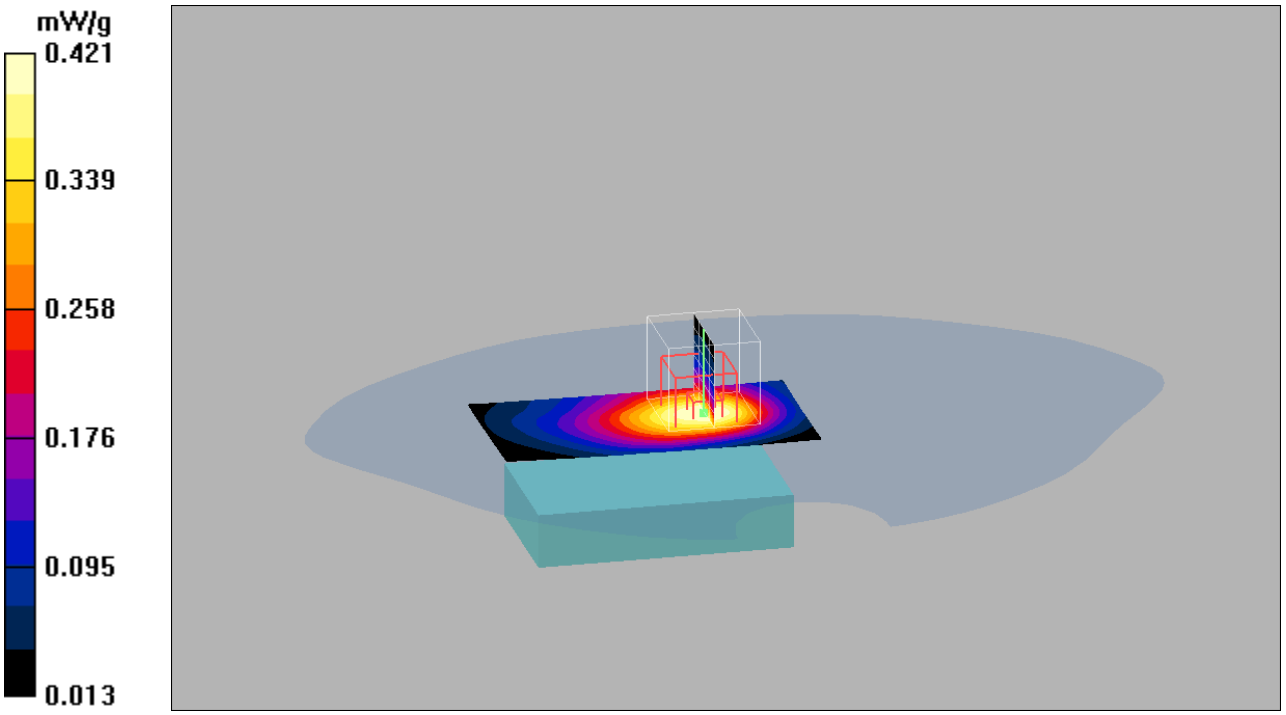

Date/Time: 2010-04-29 17:23:35

Test Laboratory: Sony Ericsson Mobile Communications AB

UMTS5 Left Cheek 100429

DUT: PY7A3880071; Type: GSM, UMTS, WLAN; Serial: #18137

Communication System: UMTS_band5; Frequency: 846.6 MHz;Duty Cycle: 1:1
Medium parameters used (interpolated): f = 846.6 MHz; σ = 0.88 mho/m; ε_r = 40.7; ρ = 1000 kg/m^3
Phantom section: Left Section
Measurement Standard: DASY4 (High Precision Assessment)

DASY4 Configuration:

- Probe: ES3DV3 - SN3062; ConvF(5.91, 5.91, 5.91); Calibrated: 2010-01-15
- Sensor-Surface: 4mm (Mechanical Surface Detection (Locations From Previous Scan Used))
  Sensor-Surface: 4mm (Mechanical Surface Detection)
- Electronics: DAE3 Sn433; Calibrated: 2010-01-15
- Phantom: SAM 2; Type: SAM QD 000 P40 CB; Serial: TP-1396
- Measurement SW: DASY4, V4.7 Build 80; Postprocessing SW: SEMCAD, V1.8 Build 186

High Cheek/Area Scan (61x111x1): Measurement grid: dx=10mm, dy=10mm
Maximum value of SAR (interpolated) = 0.305 mW/g

High Cheek/Zoom Scan (5x5x7)/Cube 0: Measurement grid: dx=8mm, dy=8mm, dz=5mm
Reference Value = 9.86 V/m; Power Drift = 0.004 dB
Peak SAR (extrapolated) = 0.369 W/kg
SAR(1 g) = 0.294 mW/g; SAR(10 g) = 0.224 mW/g
Maximum value of SAR (measured) = 0.312 mW/g

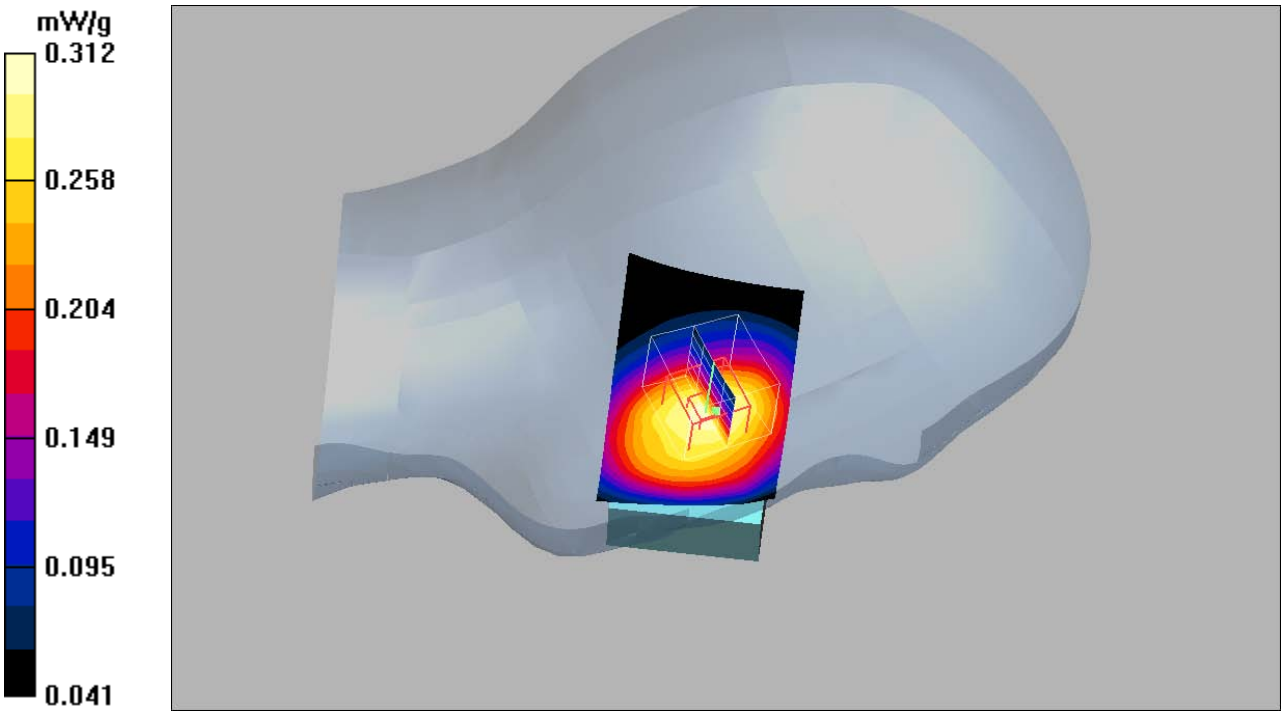

Date/Time: 2010-04-29 16:24:03

Test Laboratory: Sony Ericsson Mobile Communications AB

UMTS5 Left Tilt 100429

DUT: PY7A3880071; Type: GSM, UMTS, WLAN; Serial: #18137

Communication System: UMTS_band5; Frequency: 836.6 MHz;Duty Cycle: 1:1
Medium parameters used (interpolated): f = 836.6 MHz; σ = 0.871 mho/m; ε_r = 40.8; ρ = 1000 kg/m^3
Phantom section: Left Section
Measurement Standard: DASY4 (High Precision Assessment)

DASY4 Configuration:

- Probe: ES3DV3 - SN3062; ConvF(5.91, 5.91, 5.91); Calibrated: 2010-01-15
- Sensor-Surface: 4mm (Mechanical Surface Detection (Locations From Previous Scan Used))
  Sensor-Surface: 4mm (Mechanical Surface Detection)
- Electronics: DAE3 Sn433; Calibrated: 2010-01-15
- Phantom: SAM 2; Type: SAM QD 000 P40 CB; Serial: TP-1396
- Measurement SW: DASY4, V4.7 Build 80; Postprocessing SW: SEMCAD, V1.8 Build 186

Mid Tilt/Area Scan (61x111x1): Measurement grid: dx=10mm, dy=10mm
Maximum value of SAR (interpolated) = 0.174 mW/g

Mid Tilt/Zoom Scan (5x5x7)/Cube 0: Measurement grid: dx=8mm, dy=8mm, dz=5mm
Reference Value = 11.2 V/m; Power Drift = 0.044 dB
Peak SAR (extrapolated) = 0.210 W/kg
SAR(1 g) = 0.163 mW/g; SAR(10 g) = 0.122 mW/g
Maximum value of SAR (measured) = 0.173 mW/g

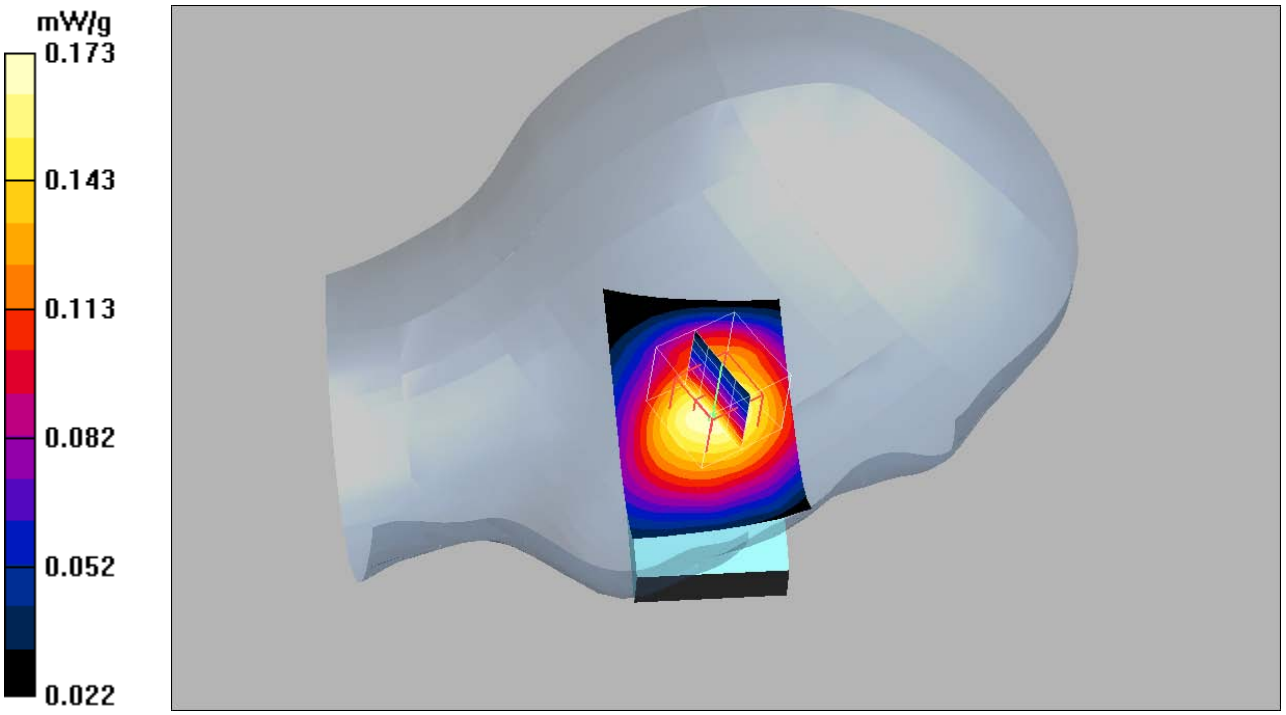

Date/Time: 2010-04-29 15:35:57

Test Laboratory: Sony Ericsson Mobile Communications AB

UMTS5 Right Cheek 100429

DUT: PY7A3880071; Type: GSM, UMTS, WLAN; Serial: #18137

Communication System: UMTS_band5; Frequency: 846.6 MHz;Duty Cycle: 1:1
Medium parameters used (interpolated): f = 846.6 MHz; σ = 0.88 mho/m; ε_r = 40.7; ρ = 1000 kg/m^3
Phantom section: Right Section
Measurement Standard: DASY4 (High Precision Assessment)

DASY4 Configuration:

- Probe: ES3DV3 - SN3062; ConvF(5.91, 5.91, 5.91); Calibrated: 2010-01-15
- Sensor-Surface: 4mm (Mechanical Surface Detection (Locations From Previous Scan Used))
  Sensor-Surface: 4mm (Mechanical Surface Detection)Sensor-Surface: 0mm (Fix Surface)
- Electronics: DAE3 Sn433; Calibrated: 2010-01-15
- Phantom: SAM 2; Type: SAM QD 000 P40 CB; Serial: TP-1396
- Measurement SW: DASY4, V4.7 Build 80; Postprocessing SW: SEMCAD, V1.8 Build 186

High Cheek/Area Scan (61x111x1): Measurement grid: dx=10mm, dy=10mm
Maximum value of SAR (interpolated) = 0.322 mW/g
High Cheek/Zoom Scan (5x5x7)/Cube 0: Measurement grid: dx=8mm, dy=8mm, dz=5mm
Reference Value = 8.73 V/m; Power Drift = 0.069 dB
Peak SAR (extrapolated) = 0.370 W/kg
SAR(1 g) = 0.304 mW/g; SAR(10 g) = 0.238 mW/g
Maximum value of SAR (measured) = 0.317 mW/g
High Cheek/Z Scan (1x1x16): Measurement grid: dx=20mm, dy=20mm, dz=20mm
Maximum value of SAR (interpolated) = 0.015 mW/g

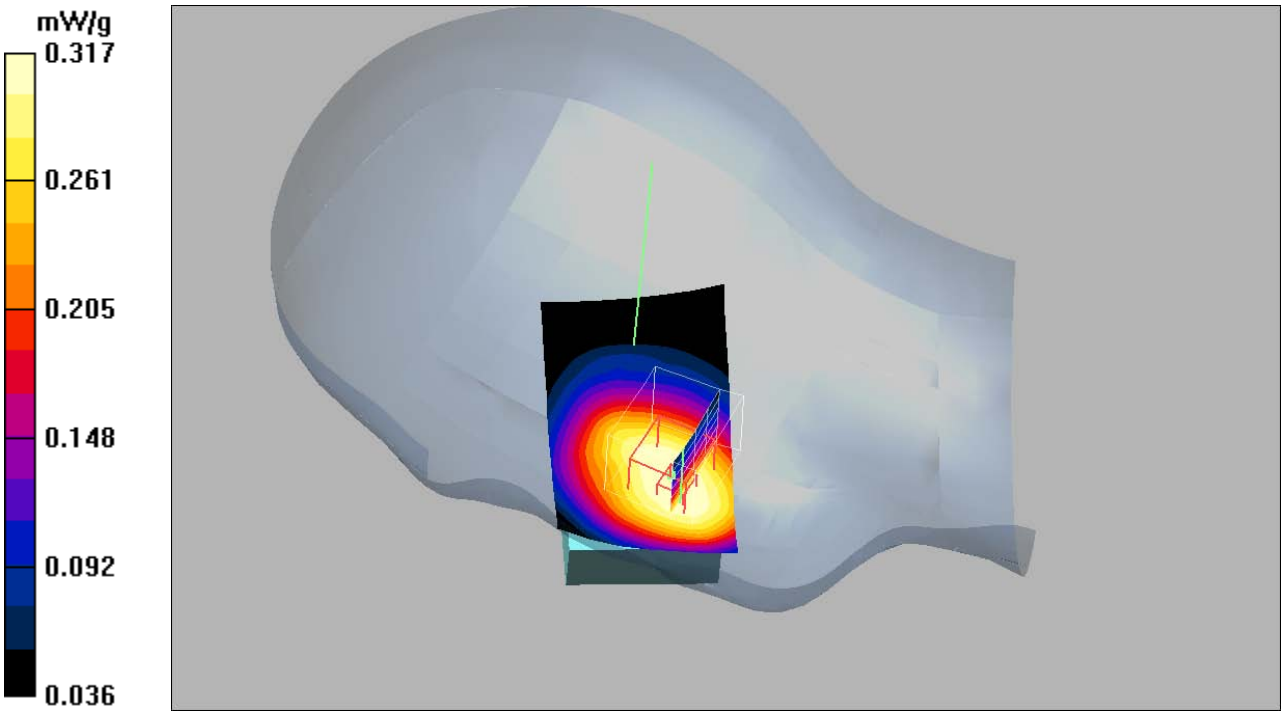

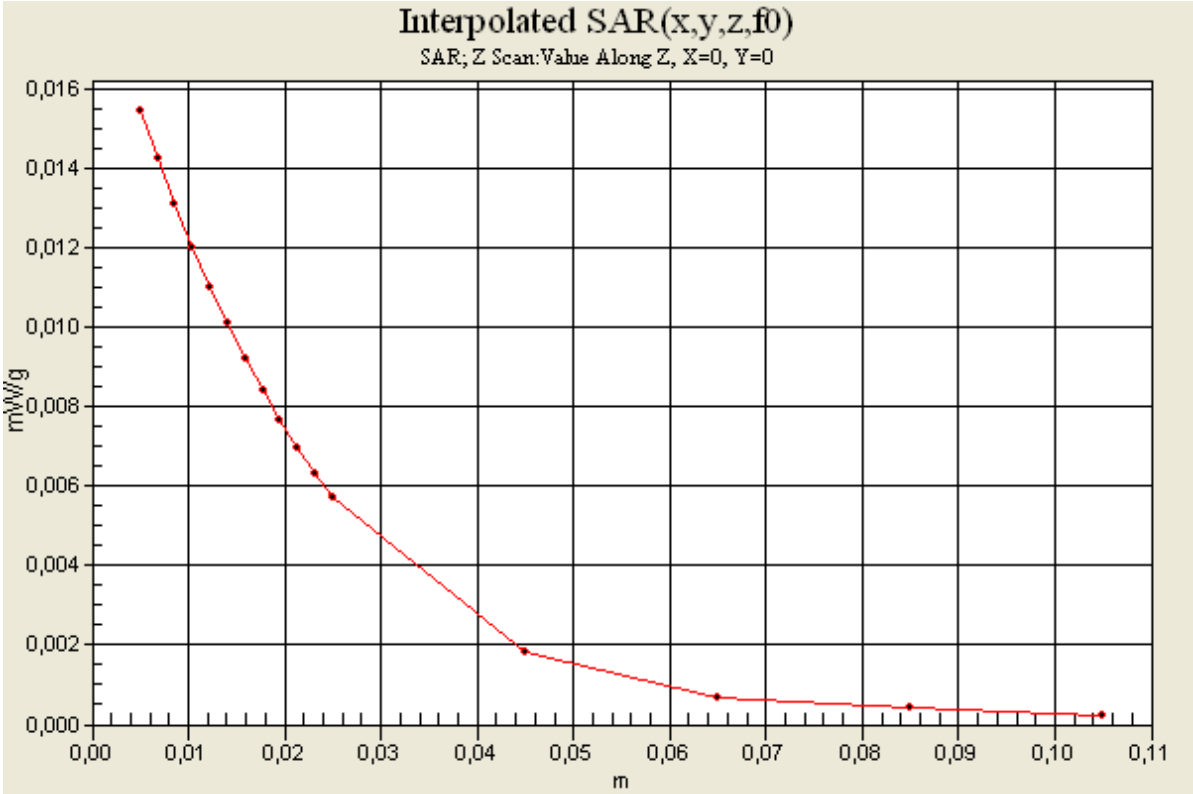
Interpolated SAR(x,y,z,f0)
SAR; Z Scan:Value Along Z, X=0, Y=0
mW/g
0,016
0,014
0,012
0,010
0,008
0,006
0,004
0,002
0,000
0,00
0,01
0,02
0,03
0,04
0,05
0,06
0,07
0,08
0,09
0,10
0,11
m

Date/Time: 2010-04-29 15:10:31

Test Laboratory: Sony Ericsson Mobile Communications AB

UMTS5 Right Tilt 100429

DUT: PY7A3880071; Type: GSM, UMTS, WLAN; Serial: #18137

Communication System: UMTS_band5; Frequency: 836.6 MHz;Duty Cycle: 1:1
Medium parameters used (interpolated): f = 836.6 MHz; σ = 0.871 mho/m; ε_r = 40.8; ρ = 1000 kg/m^3
Phantom section: Right Section
Measurement Standard: DASY4 (High Precision Assessment)

DASY4 Configuration:

- Probe: ES3DV3 - SN3062; ConvF(5.91, 5.91, 5.91); Calibrated: 2010-01-15
- Sensor-Surface: 4mm (Mechanical Surface Detection (Locations From Previous Scan Used))
  Sensor-Surface: 4mm (Mechanical Surface Detection)
- Electronics: DAE3 Sn433; Calibrated: 2010-01-15
- Phantom: SAM 2; Type: SAM QD 000 P40 CB; Serial: TP-1396
- Measurement SW: DASY4, V4.7 Build 80; Postprocessing SW: SEMCAD, V1.8 Build 186

Mid Tilt/Area Scan (61x111x1): Measurement grid: dx=10mm, dy=10mm
Maximum value of SAR (interpolated) = 0.166 mW/g

Mid Tilt/Zoom Scan (5x5x7)/Cube 0: Measurement grid: dx=8mm, dy=8mm, dz=5mm
Reference Value = 10.1 V/m; Power Drift = 0.063 dB
Peak SAR (extrapolated) = 0.202 W/kg
SAR(1 g) = 0.158 mW/g; SAR(10 g) = 0.119 mW/g
Maximum value of SAR (measured) = 0.167 mW/g

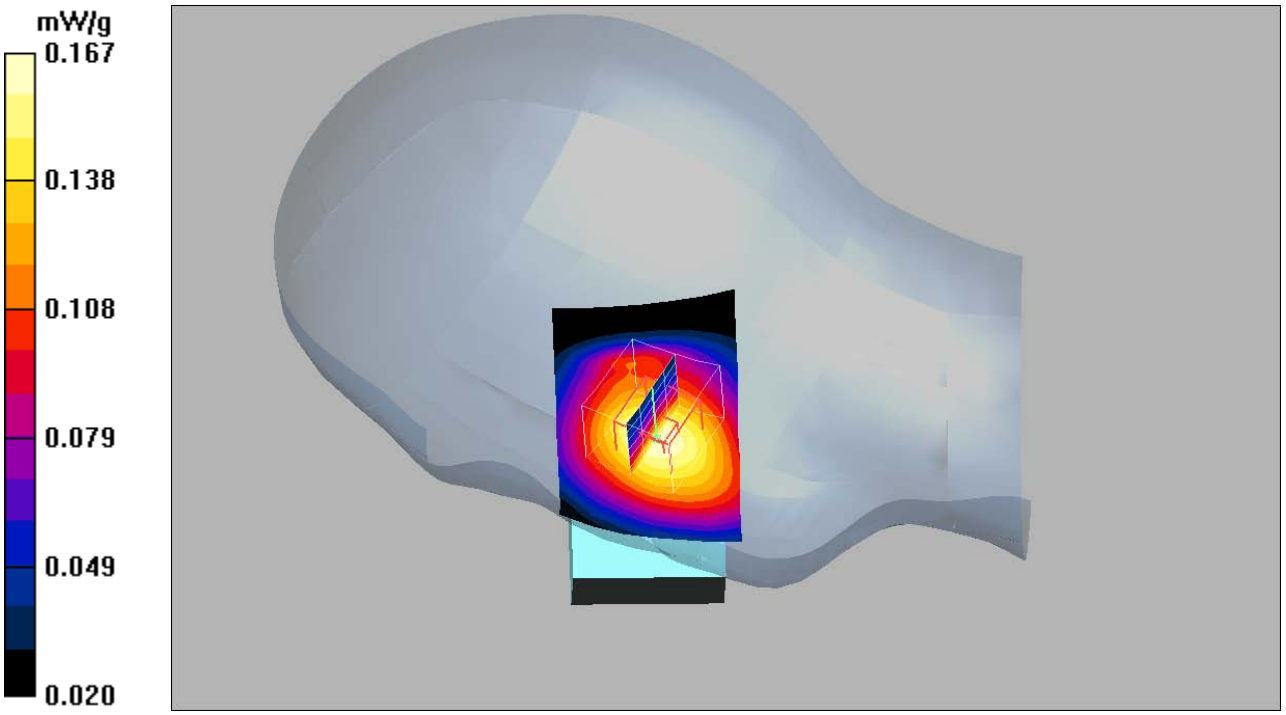

Date/Time: 2010-05-03 15:57:08

Test Laboratory: Sony Ericsson Mobile Communications AB

UMTS5 Body Speech PHF 100503

DUT: PY7A3880071; Type: GSM, UMTS, WLAN; Serial: #18137

Communication System: UMTS_band5; Frequency: 846.6 MHz;Duty Cycle: 1:1
Medium parameters used (interpolated): f = 846.6 MHz; σ = 0.973 mho/m; ε_r = 52.5; ρ = 1000 kg/m^3
Phantom section: Flat Section
Measurement Standard: DASY4 (High Precision Assessment)

DASY4 Configuration:

- Probe: ES3DV3 - SN3062; ConvF(5.79, 5.79, 5.79); Calibrated: 2010-01-15
- Sensor-Surface: 4mm (Mechanical Surface Detection (Locations From Previous Scan Used))
  Sensor-Surface: 4mm (Mechanical Surface Detection)
- Electronics: DAE3 Sn433; Calibrated: 2010-01-15
- Phantom: SAM 2; Type: SAM QD 000 P40 CB; Serial: TP-1396
- Measurement SW: DASY4, V4.7 Build 80; Postprocessing SW: SEMCAD, V1.8 Build 186

High, PHF/Area Scan (61x111x1): Measurement grid: dx=10mm, dy=10mm
Maximum value of SAR (interpolated) = 0.612 mW/g

High, PHF/Zoom Scan (5x5x7)/Cube 0: Measurement grid: dx=8mm, dy=8mm, dz=5mm
Reference Value = 11.1 V/m; Power Drift = -0.083 dB
Peak SAR (extrapolated) = 0.849 W/kg
SAR(1 g) = 0.573 mW/g; SAR(10 g) = 0.378 mW/g
Maximum value of SAR (measured) = 0.621 mW/g

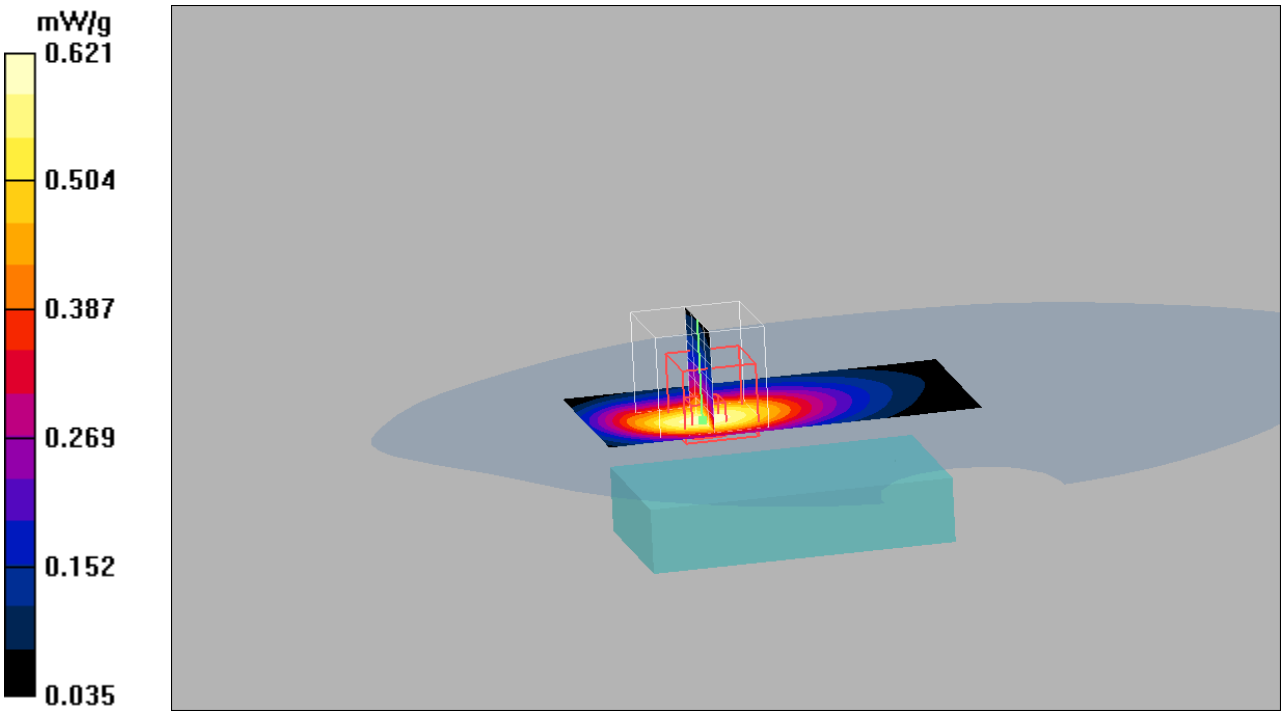

Date/Time: 2010-05-03 15:37:18

Test Laboratory: Sony Ericsson Mobile Communications AB

UMTS5 Body Speech 100503

DUT: PY7A3880071; Type: GSM, UMTS, WLAN; Serial: #18137

Communication System: UMTS_band5; Frequency: 846.6 MHz;Duty Cycle: 1:1
Medium parameters used (interpolated): f = 846.6 MHz; σ = 0.973 mho/m; ε_r = 52.5; ρ = 1000 kg/m^3
Phantom section: Flat Section
Measurement Standard: DASY4 (High Precision Assessment)

DASY4 Configuration:

- Probe: ES3DV3 - SN3062; ConvF(5.79, 5.79, 5.79); Calibrated: 2010-01-15
- Sensor-Surface: 4mm (Mechanical Surface Detection (Locations From Previous Scan Used))
  Sensor-Surface: 4mm (Mechanical Surface Detection)Sensor-Surface: 0mm (Fix Surface)
- Electronics: DAE3 Sn433; Calibrated: 2010-01-15
- Phantom: SAM 2; Type: SAM QD 000 P40 CB; Serial: TP-1396
- Measurement SW: DASY4, V4.7 Build 80; Postprocessing SW: SEMCAD, V1.8 Build 186

High, BT/Area Scan (61x111x1): Measurement grid: dx=10mm, dy=10mm
Maximum value of SAR (interpolated) = 0.807 mW/g
High, BT/Zoom Scan (5x5x7)/Cube 0: Measurement grid: dx=8mm, dy=8mm, dz=5mm
Reference Value = 11.3 V/m; Power Drift = -0.082 dB
Peak SAR (extrapolated) = 1.11 W/kg
SAR(1 g) = 0.756 mW/g; SAR(10 g) = 0.501 mW/g
Maximum value of SAR (measured) = 0.816 mW/g
High, BT/Z Scan (1x1x16): Measurement grid: dx=20mm, dy=20mm, dz=20mm
Maximum value of SAR (interpolated) = 0.060 mW/g

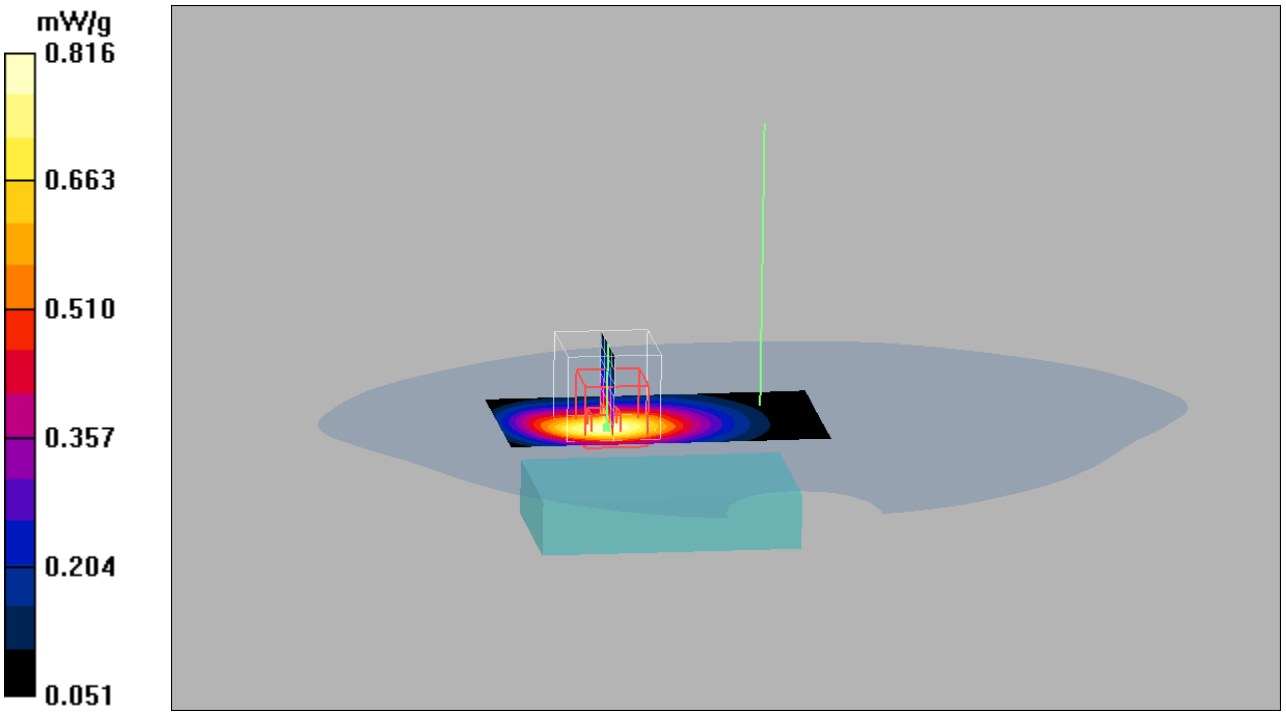

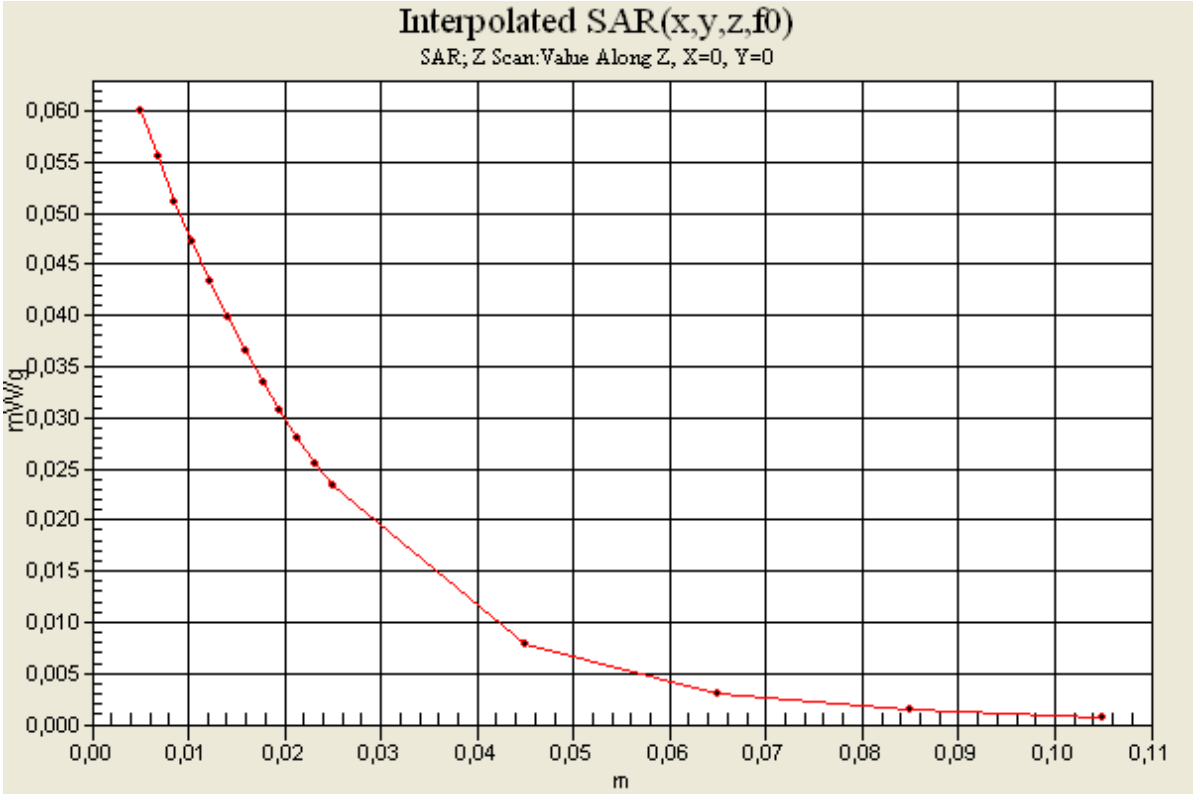
Interpolated SAR(x,y,z,f0)
SAR; Z Scan:Value Along Z, X=0, Y=0
mW/g
0,060
0,055
0,050
0,045
0,040
0,035
0,030
0,025
0,020
0,015
0,010
0,005
0,000
0,00
0,01
0,02
0,03
0,04
0,05
0,06
0,07
0,08
0,09
0,10
0,11
m

Date/Time: 2010-05-03 16:09:28

Test Laboratory: Sony Ericsson Mobile Communications AB

UMTS5 Body Front Speech 100503

DUT: PY7A3880071; Type: GSM, UMTS, WLAN; Serial: #18137

Communication System: UMTS_band5; Frequency: 846.6 MHz;Duty Cycle: 1:1
Medium parameters used (interpolated): f = 846.6 MHz; σ = 0.973 mho/m; ε_r = 52.5; ρ = 1000 kg/m^3
Phantom section: Flat Section
Measurement Standard: DASY4 (High Precision Assessment)

DASY4 Configuration:

- Probe: ES3DV3 - SN3062; ConvF(5.79, 5.79, 5.79); Calibrated: 2010-01-15
- Sensor-Surface: 4mm (Mechanical Surface Detection (Locations From Previous Scan Used))
  Sensor-Surface: 4mm (Mechanical Surface Detection)
- Electronics: DAE3 Sn433; Calibrated: 2010-01-15
- Phantom: SAM 2; Type: SAM QD 000 P40 CB; Serial: TP-1396
- Measurement SW: DASY4, V4.7 Build 80; Postprocessing SW: SEMCAD, V1.8 Build 186

Front, BT/Area Scan (61x111x1): Measurement grid: dx=10mm, dy=10mm
Maximum value of SAR (interpolated) = 0.205 mW/g

Front, BT/Zoom Scan (5x5x7)/Cube 0: Measurement grid: dx=8mm, dy=8mm, dz=5mm
Reference Value = 8.37 V/m; Power Drift = 0.027 dB
Peak SAR (extrapolated) = 0.246 W/kg
SAR(1 g) = 0.193 mW/g; SAR(10 g) = 0.144 mW/g
Maximum value of SAR (measured) = 0.203 mW/g

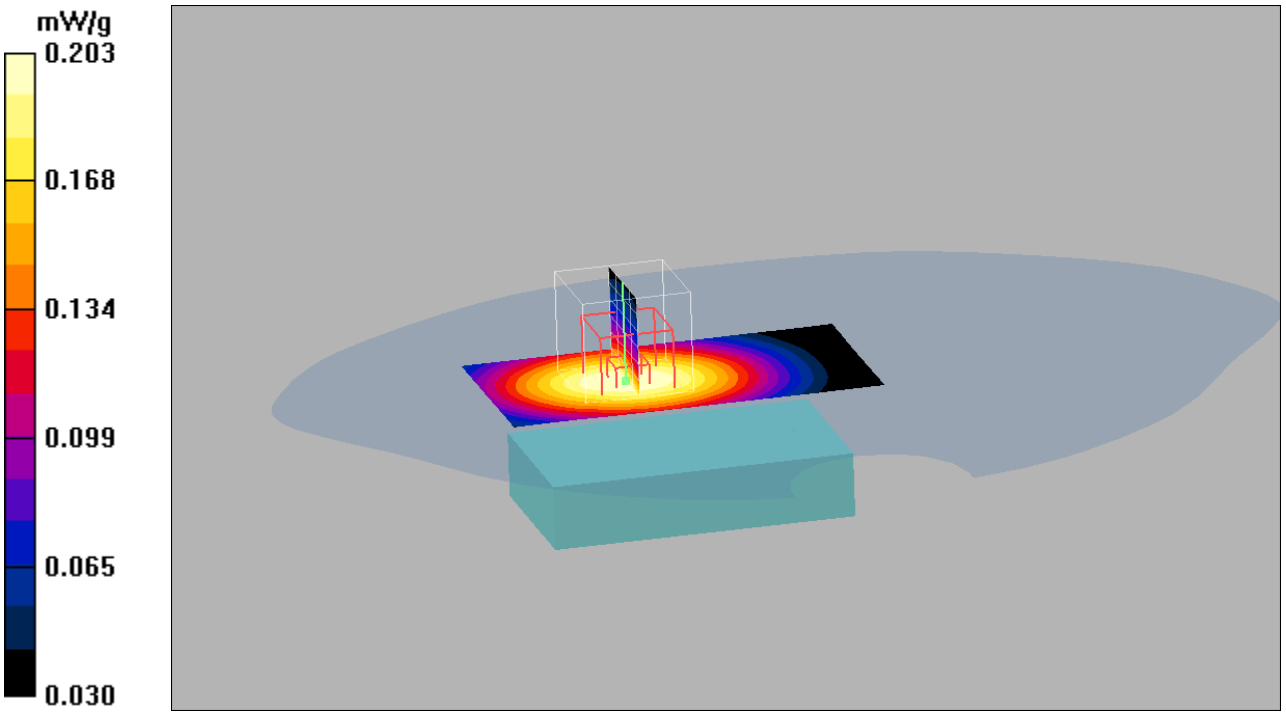

Date/Time: 2010-04-26 11:40:11

Test Laboratory: Sony Ericsson Mobile Communications AB

System Performance Check 2450MHz Head 100426

DUT: Dipole 2450 MHz; Type: D2450V2; Serial: 745

Communication System: CW; Frequency: 2450 MHz;Duty Cycle: 1:1
Medium parameters used: f = 2450 MHz; σ = 1.82 mho/m; ε_r = 38.2; ρ = 1000 kg/m^3
Phantom section: Flat Section
Measurement Standard: DASY4 (High Precision Assessment)

DASY4 Configuration:

- Probe: ES3DV3 - SN3062; ConvF(4.31, 4.31, 4.31); Calibrated: 2010-01-15
- Sensor-Surface: 4mm (Mechanical Surface Detection)
- Electronics: DAE3 Sn433; Calibrated: 2010-01-15
- Phantom: SAM 1; Type: Twin SAM; Serial: TP-1144
- Measurement SW: DASY4, V4.7 Build 80; Postprocessing SW: SEMCAD, V1.8 Build 186

2450 MHz Dipole/Area Scan (61x91x1): Measurement grid: dx=10mm, dy=10mm
Maximum value of SAR (interpolated) = 6.28 mW/g

2450 MHz Dipole/Zoom Scan (5x5x7)/Cube 0: Measurement grid: dx=8mm, dy=8mm, dz=5mm
Reference Value = 54.0 V/m; Power Drift = 0.015 dB
Peak SAR (extrapolated) = 11.6 W/kg
SAR(1 g) = 5.31 mW/g; SAR(10 g) = 2.39 mW/g
Maximum value of SAR (measured) = 6.01 mW/g

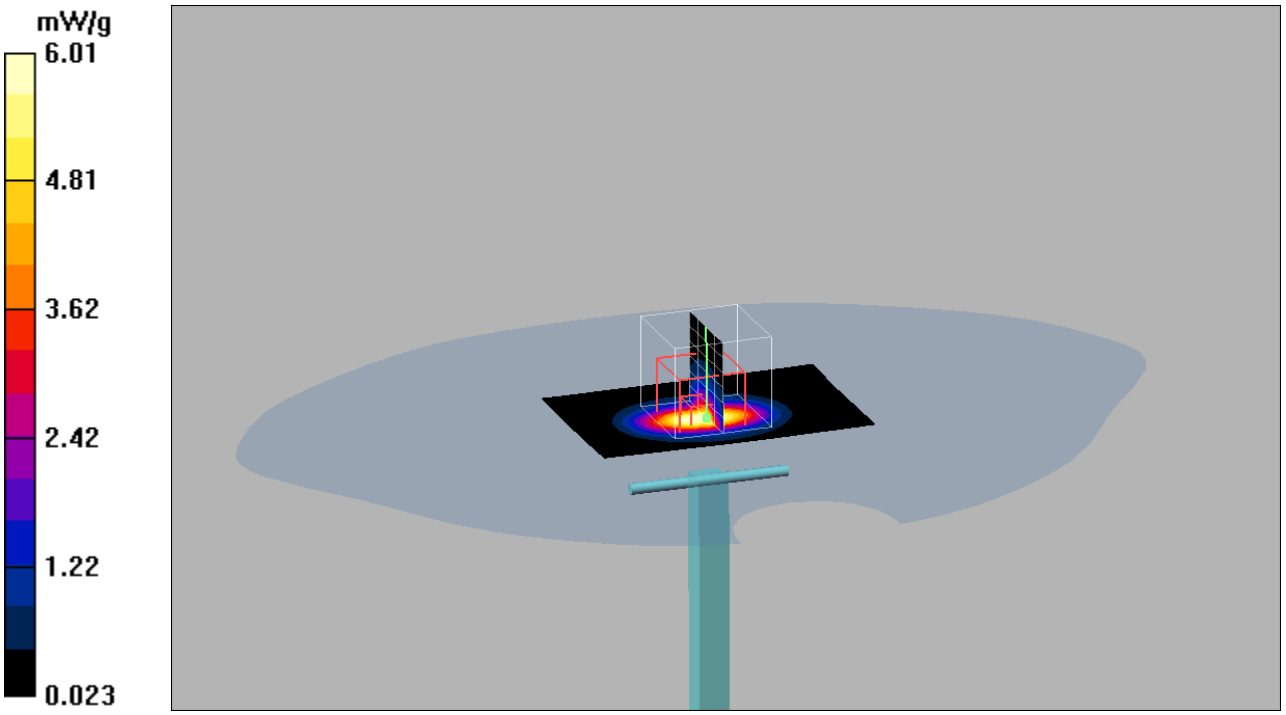

Date/Time: 2010-04-26 17:27:33

Test Laboratory: Sony Ericsson Mobile Communications AB

System Performance Check 2450MHz Body 100426

DUT: Dipole 2450 MHz; Type: D2450V2; Serial: 745

Communication System: CW; Frequency: 2450 MHz;Duty Cycle: 1:1
Medium parameters used: f = 2450 MHz; σ = 1.97 mho/m; ε_r = 50.5; ρ = 1000 kg/m^3
Phantom section: Flat Section
Measurement Standard: DASY4 (High Precision Assessment)

DASY4 Configuration:

- Probe: ES3DV3 - SN3062; ConvF(3.97, 3.97, 3.97); Calibrated: 2010-01-15
- Sensor-Surface: 4mm (Mechanical Surface Detection)
- Electronics: DAE3 Sn433; Calibrated: 2010-01-15
- Phantom: SAM 2; Type: SAM QD 000 P40 CB; Serial: TP-1396
- Measurement SW: DASY4, V4.7 Build 80; Postprocessing SW: SEMCAD, V1.8 Build 186

2450 MHz Dipole/Area Scan (61x91x1): Measurement grid: dx=10mm, dy=10mm
Maximum value of SAR (interpolated) = 6.09 mW/g

2450 MHz Dipole/Zoom Scan (5x5x7)/Cube 0: Measurement grid: dx=8mm, dy=8mm, dz=5mm
Reference Value = 53.7 V/m; Power Drift = 0.017 dB
Peak SAR (extrapolated) = 11.2 W/kg
SAR(1 g) = 5.3 mW/g; SAR(10 g) = 2.42 mW/g
Maximum value of SAR (measured) = 6.03 mW/g

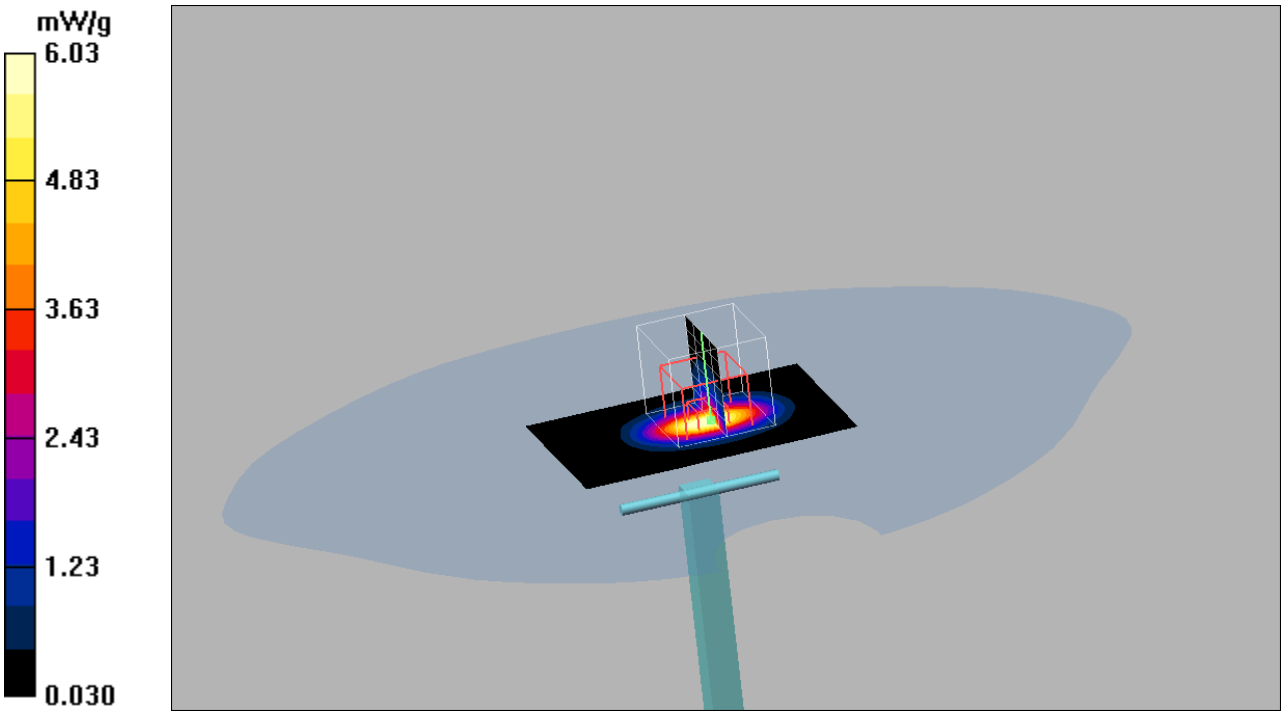

Date/Time: 2010-04-26 12:52:27

Test Laboratory: Sony Ericsson Mobile Communications AB

WLAN Left Cheek 100426

DUT: PY7A3880071; Type: GSM, UMTS, WLAN; Serial: #18141

Communication System: WLAN; Frequency: 2412 MHz;Duty Cycle: 1:1
Medium parameters used (interpolated): f = 2412 MHz; σ = 1.79 mho/m; ε_r = 38.2; ρ = 1000 kg/m^3
Phantom section: Left Section
Measurement Standard: DASY4 (High Precision Assessment)

DASY4 Configuration:

- Probe: ES3DV3 - SN3062; ConvF(4.31, 4.31, 4.31); Calibrated: 2010-01-15
- Sensor-Surface: 4mm (Mechanical Surface Detection (Locations From Previous Scan Used))
  Sensor-Surface: 4mm (Mechanical Surface Detection)
- Electronics: DAE3 Sn433; Calibrated: 2010-01-15
- Phantom: SAM 1; Type: Twin SAM; Serial: TP-1144
- Measurement SW: DASY4, V4.7 Build 80; Postprocessing SW: SEMCAD, V1.8 Build 186

Low Cheek/Area Scan (61x111x1): Measurement grid: dx=10mm, dy=10mm
Maximum value of SAR (interpolated) = 0.145 mW/g

Low Cheek/Zoom Scan (5x5x7)/Cube 0: Measurement grid: dx=8mm, dy=8mm, dz=5mm
Reference Value = 8.44 V/m; Power Drift = -0.155 dB
Peak SAR (extrapolated) = 0.222 W/kg
SAR(1 g) = 0.139 mW/g; SAR(10 g) = 0.079 mW/g
Maximum value of SAR (measured) = 0.152 mW/g

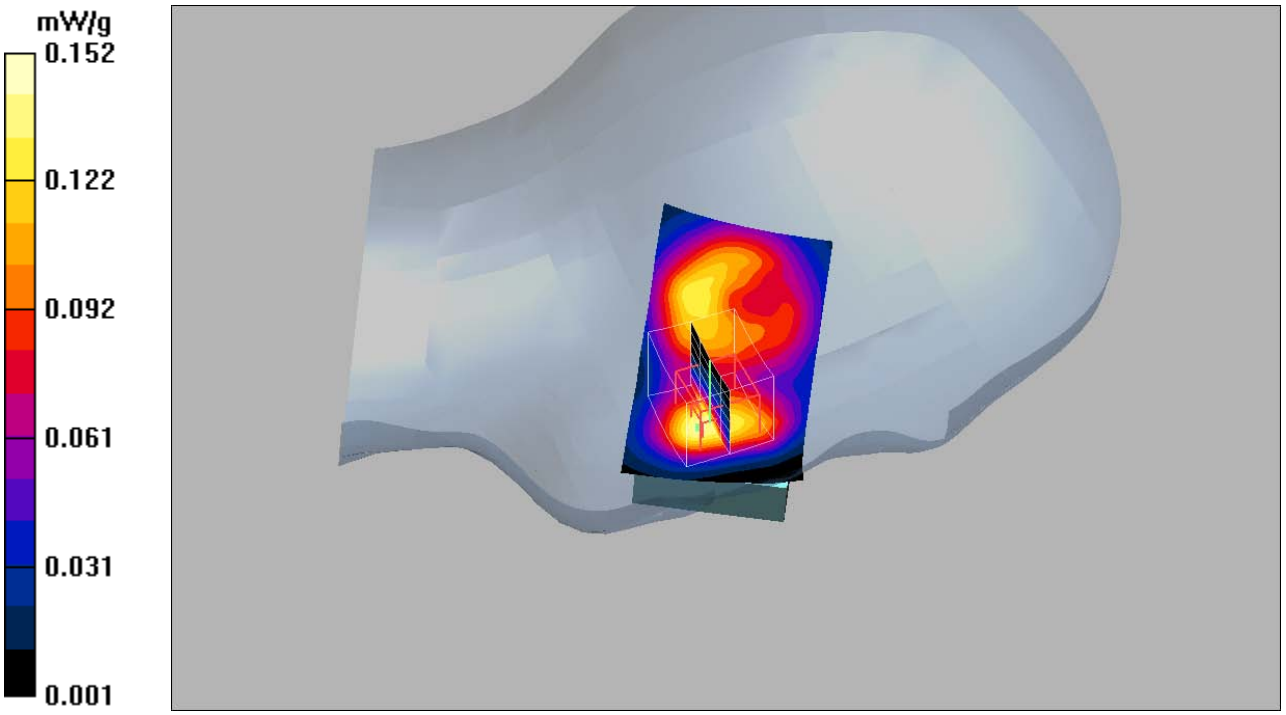

Date/Time: 2010-04-26 14:22:23

Test Laboratory: Sony Ericsson Mobile Communications AB

WLAN Left Tilt 100426

DUT: PY7A3880071; Type: GSM, UMTS, WLAN; Serial: #18141

Communication System: WLAN; Frequency: 2412 MHz;Duty Cycle: 1:1
Medium parameters used (interpolated): f = 2412 MHz; σ = 1.79 mho/m; ε_r = 38.2; ρ = 1000 kg/m^3
Phantom section: Left Section
Measurement Standard: DASY4 (High Precision Assessment)

DASY4 Configuration:

- Probe: ES3DV3 - SN3062; ConvF(4.31, 4.31, 4.31); Calibrated: 2010-01-15
- Sensor-Surface: 4mm (Mechanical Surface Detection (Locations From Previous Scan Used))
  Sensor-Surface: 4mm (Mechanical Surface Detection)
- Electronics: DAE3 Sn433; Calibrated: 2010-01-15
- Phantom: SAM 1; Type: Twin SAM; Serial: TP-1144
- Measurement SW: DASY4, V4.7 Build 80; Postprocessing SW: SEMCAD, V1.8 Build 186

Low Tilt/Area Scan (61x111x1): Measurement grid: dx=10mm, dy=10mm
Maximum value of SAR (interpolated) = 0.152 mW/g

Low Tilt/Zoom Scan (5x5x7)/Cube 0: Measurement grid: dx=8mm, dy=8mm, dz=5mm
Reference Value = 7.40 V/m; Power Drift = -0.047 dB
Peak SAR (extrapolated) = 0.241 W/kg
SAR(1 g) = 0.131 mW/g; SAR(10 g) = 0.069 mW/g
Maximum value of SAR (measured) = 0.148 mW/g

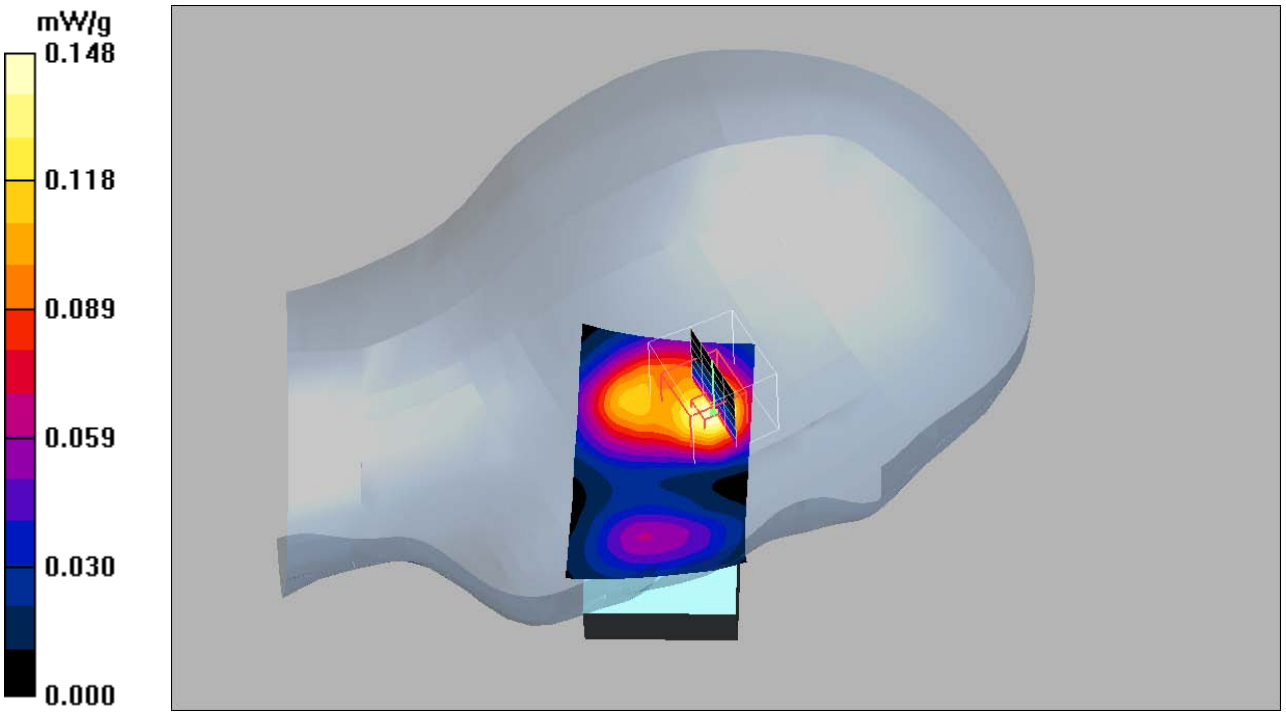

Date/Time: 2010-04-26 16:06:29

Test Laboratory: Sony Ericsson Mobile Communications AB

WLAN Right Cheek 100426

DUT: PY7A3880071; Type: GSM, UMTS, WLAN; Serial: #18141

Communication System: WLAN; Frequency: 2412 MHz;Duty Cycle: 1:1
Medium parameters used (interpolated): f = 2412 MHz; σ = 1.79 mho/m; ε_r = 38.2; ρ = 1000 kg/m^3
Phantom section: Right Section
Measurement Standard: DASY4 (High Precision Assessment)

DASY4 Configuration:

- Probe: ES3DV3 - SN3062; ConvF(4.31, 4.31, 4.31); Calibrated: 2010-01-15
- Sensor-Surface: 4mm (Mechanical Surface Detection (Locations From Previous Scan Used))
  Sensor-Surface: 4mm (Mechanical Surface Detection)Sensor-Surface: 0mm (Fix Surface)
- Electronics: DAE3 Sn433; Calibrated: 2010-01-15
- Phantom: SAM 1; Type: Twin SAM; Serial: TP-1144
- Measurement SW: DASY4, V4.7 Build 80; Postprocessing SW: SEMCAD, V1.8 Build 186

Low Cheek/Area Scan (61x111x1): Measurement grid: dx=10mm, dy=10mm
Maximum value of SAR (interpolated) = 0.219 mW/g
Low Cheek/Zoom Scan (5x5x7)/Cube 0: Measurement grid: dx=8mm, dy=8mm, dz=5mm
Reference Value = 6.27 V/m; Power Drift = -0.049 dB
Peak SAR (extrapolated) = 0.352 W/kg
SAR(1 g) = 0.191 mW/g; SAR(10 g) = 0.101 mW/g
Maximum value of SAR (measured) = 0.210 mW/g
Low Cheek/Z Scan (1x1x16): Measurement grid: dx=20mm, dy=20mm, dz=20mm
Maximum value of SAR (interpolated) = 0.014 mW/g

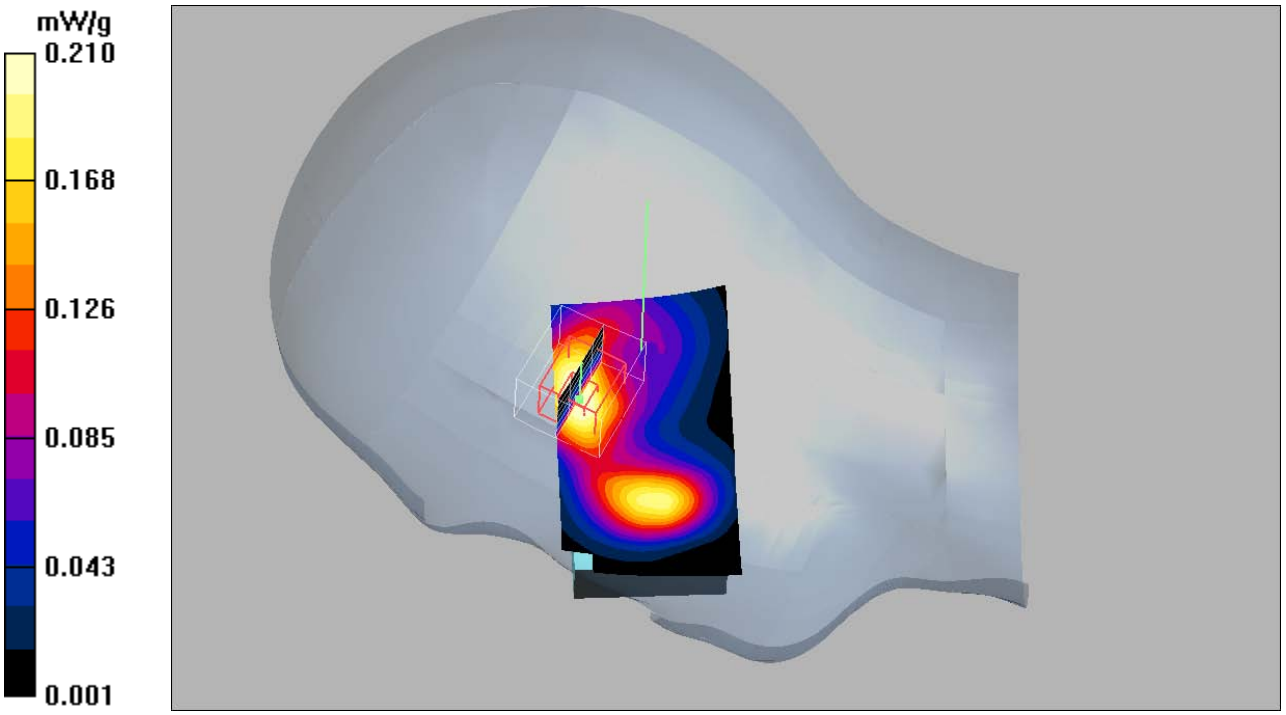

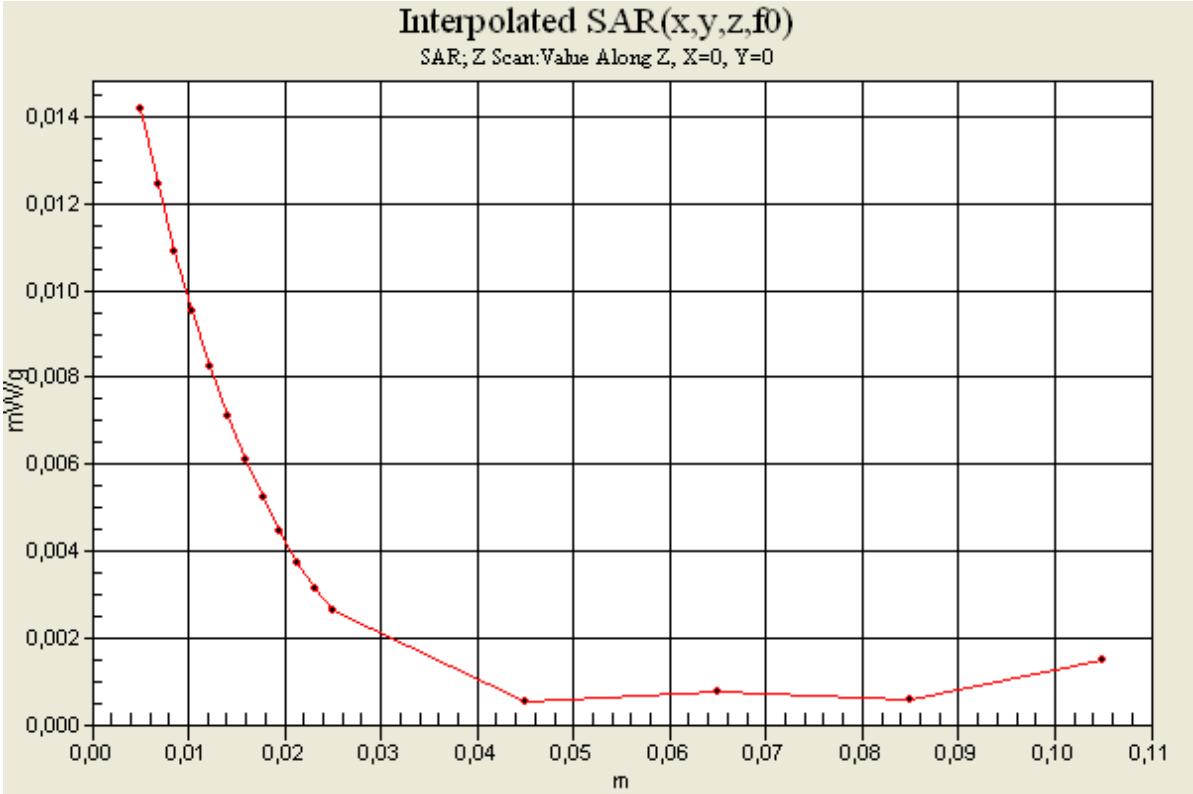
Interpolated SAR(x,y,z,f0)
SAR; Z Scan:Value Along Z, X=0, Y=0
mW/g
0,014
0,012
0,010
0,008
0,006
0,004
0,002
0,000
0,00
0,01
0,02
0,03
0,04
0,05
0,06
0,07
0,08
0,09
0,10
0,11
m

Date/Time: 2010-04-26 16:18:47

Test Laboratory: Sony Ericsson Mobile Communications AB

WLAN Right Tilt 100426

DUT: PY7A3880071; Type: GSM, UMTS, WLAN; Serial: #18141

Communication System: WLAN; Frequency: 2412 MHz;Duty Cycle: 1:1
Medium parameters used (interpolated): f = 2412 MHz; σ = 1.79 mho/m; ε_r = 38.2; ρ = 1000 kg/m^3
Phantom section: Right Section
Measurement Standard: DASY4 (High Precision Assessment)

DASY4 Configuration:

- Probe: ES3DV3 - SN3062; ConvF(4.31, 4.31, 4.31); Calibrated: 2010-01-15
- Sensor-Surface: 4mm (Mechanical Surface Detection (Locations From Previous Scan Used))
  Sensor-Surface: 4mm (Mechanical Surface Detection)
- Electronics: DAE3 Sn433; Calibrated: 2010-01-15
- Phantom: SAM 1; Type: Twin SAM; Serial: TP-1144
- Measurement SW: DASY4, V4.7 Build 80; Postprocessing SW: SEMCAD, V1.8 Build 186

Low Tilt/Area Scan (61x111x1): Measurement grid: dx=10mm, dy=10mm
Maximum value of SAR (interpolated) = 0.130 mW/g

Low Tilt/Zoom Scan (5x5x7)/Cube 0: Measurement grid: dx=8mm, dy=8mm, dz=5mm
Reference Value = 7.24 V/m; Power Drift = -0.005 dB
Peak SAR (extrapolated) = 0.219 W/kg
SAR(1 g) = 0.113 mW/g; SAR(10 g) = 0.059 mW/g
Maximum value of SAR (measured) = 0.124 mW/g

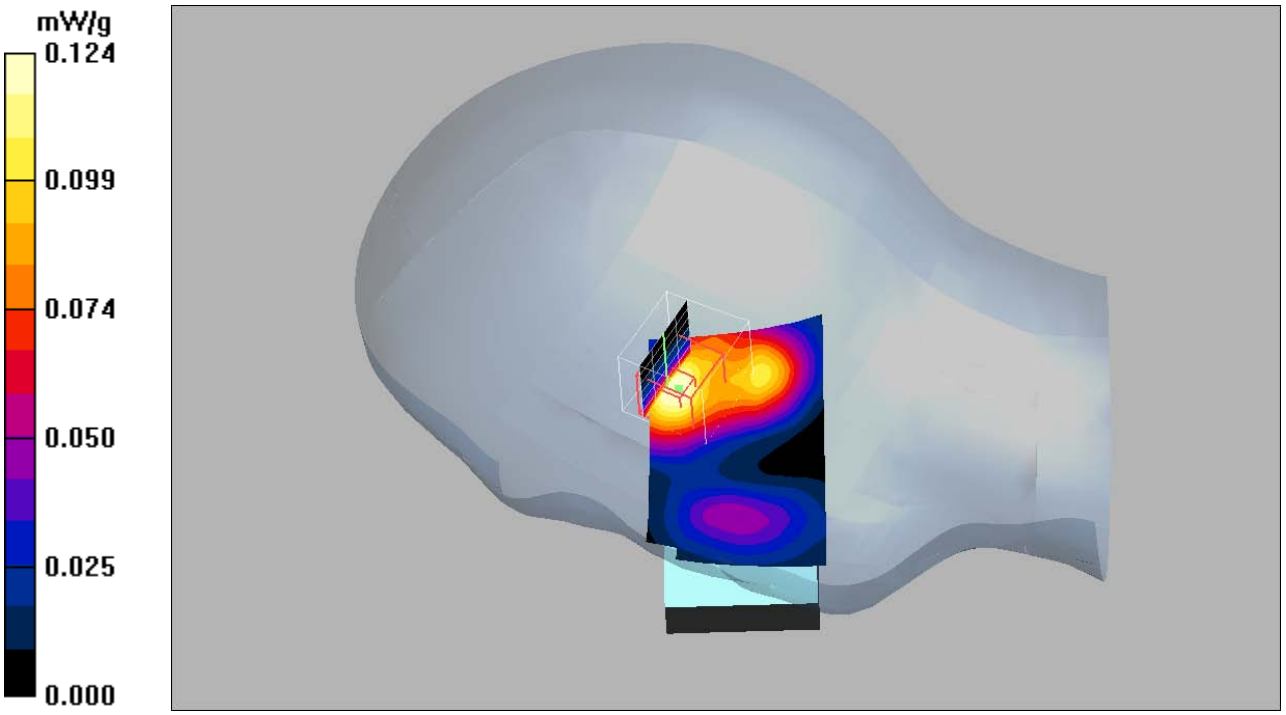

Date/Time: 2010-04-26 18:11:15

Test Laboratory: Sony Ericsson Mobile Communications AB

WLAN Body Back 100426

DUT: PY7A3880071; Type: GSM, UMTS, WLAN; Serial: #18141

Communication System: WLAN; Frequency: 2437 MHz;Duty Cycle: 1:1
Medium parameters used (interpolated): f = 2437 MHz; σ = 1.96 mho/m; ε_r = 50.6; ρ = 1000 kg/m^3
Phantom section: Flat Section
Measurement Standard: DASY4 (High Precision Assessment)

DASY4 Configuration:

- Probe: ES3DV3 - SN3062; ConvF(3.97, 3.97, 3.97); Calibrated: 2010-01-15
- Sensor-Surface: 4mm (Mechanical Surface Detection (Locations From Previous Scan Used))
  Sensor-Surface: 4mm (Mechanical Surface Detection)Sensor-Surface: 0mm (Fix Surface)
- Electronics: DAE3 Sn433; Calibrated: 2010-01-15
- Phantom: SAM 2; Type: SAM QD 000 P40 CB; Serial: TP-1396
- Measurement SW: DASY4, V4.7 Build 80; Postprocessing SW: SEMCAD, V1.8 Build 186

Mid, Back/Area Scan (61x111x1): Measurement grid: dx=10mm, dy=10mm
Maximum value of SAR (interpolated) = 0.223 mW/g
Mid, Back/Zoom Scan (5x5x7)/Cube 0: Measurement grid: dx=8mm, dy=8mm, dz=5mm
Reference Value = 9.19 V/m; Power Drift = -0.050 dB
Peak SAR (extrapolated) = 0.374 W/kg
SAR(1 g) = 0.204 mW/g; SAR(10 g) = 0.115 mW/g
Maximum value of SAR (measured) = 0.220 mW/g
Mid, Back/Z Scan (1x1x16): Measurement grid: dx=20mm, dy=20mm, dz=20mm
Maximum value of SAR (interpolated) = 0.007 mW/g

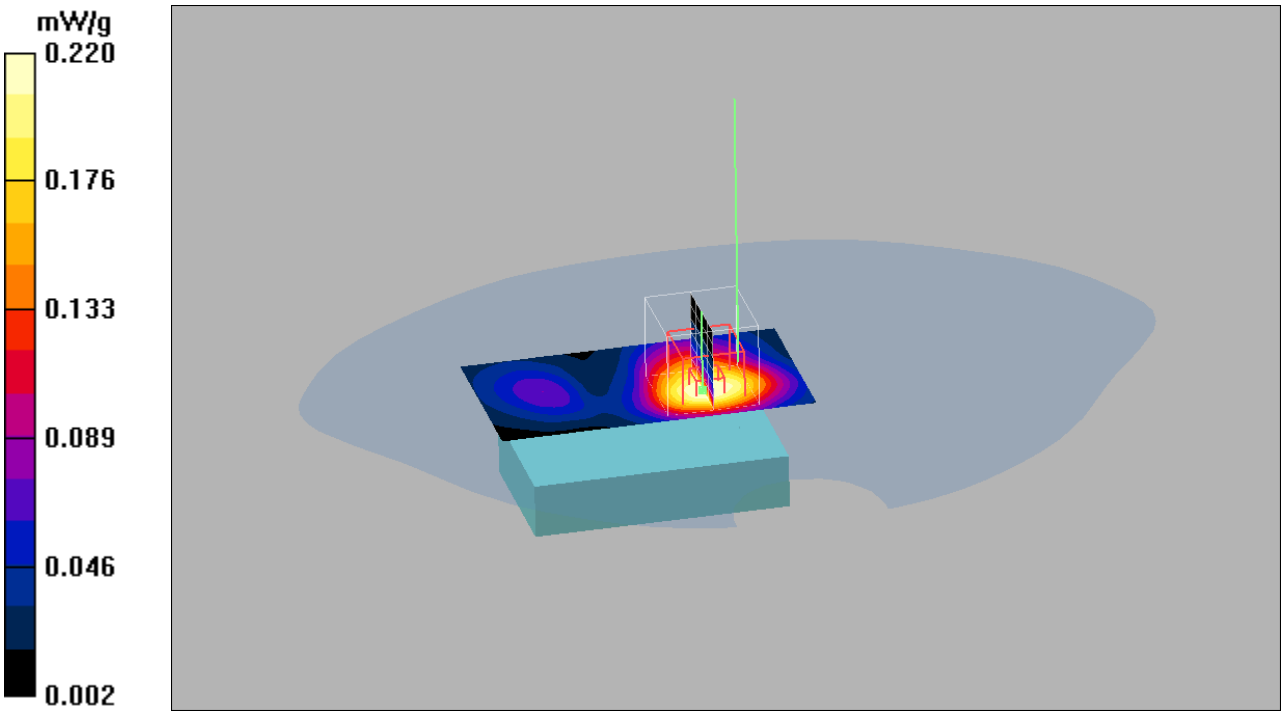

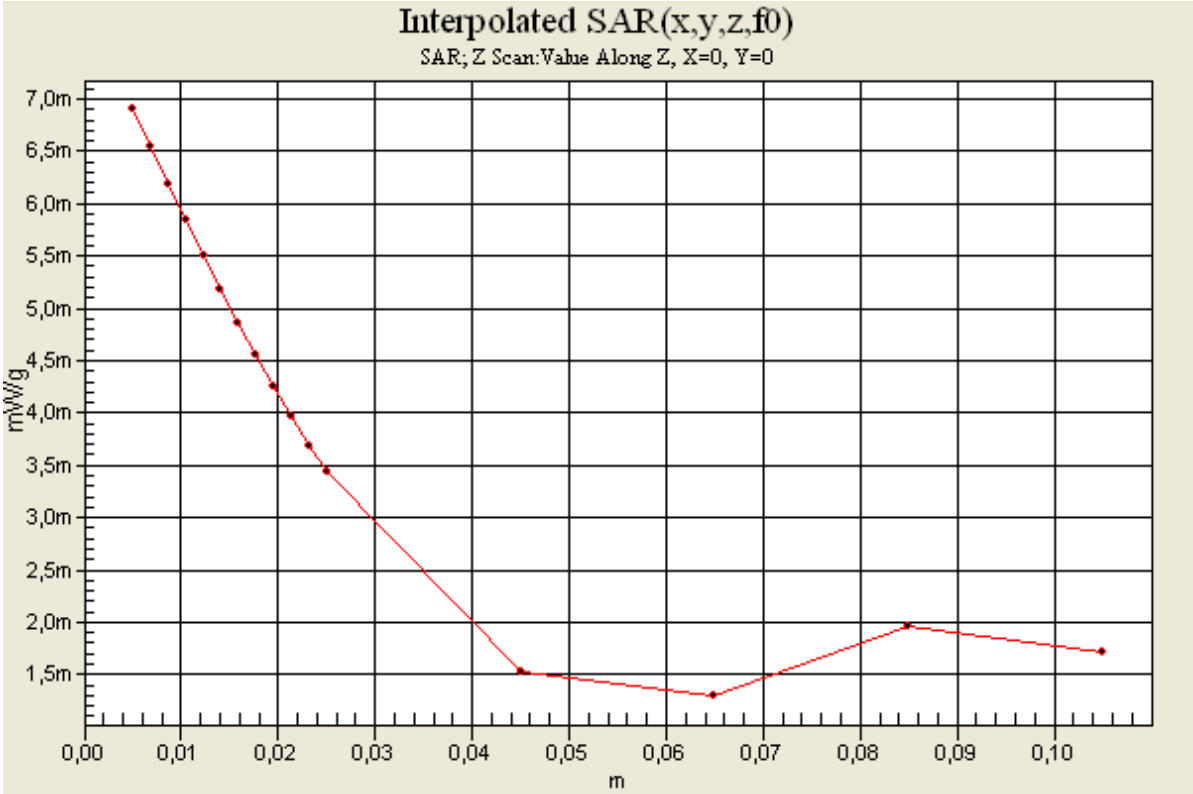
Interpolated SAR(x,y,z,f0)
SAR; Z Scan:Value Along Z, X=0, Y=0
mW/g
7,0m
6,5m
6,0m
5,5m
5,0m
4,5m
4,0m
3,5m
3,0m
2,5m
2,0m
1,5m
0,00
0,01
0,02
0,03
0,04
0,05
0,06
0,07
0,08
0,09
0,10
m

Date/Time: 2010-04-26 18:58:58

Test Laboratory: Sony Ericsson Mobile Communications AB

WLAN Body Front 100426

DUT: PY7A3880071; Type: GSM, UMTS, WLAN; Serial: #18141

Communication System: WLAN; Frequency: 2437 MHz;Duty Cycle: 1:1
Medium parameters used (interpolated): f = 2437 MHz; σ = 1.96 mho/m; ε_r = 50.6; ρ = 1000 kg/m^3
Phantom section: Flat Section
Measurement Standard: DASY4 (High Precision Assessment)

DASY4 Configuration:

- Probe: ES3DV3 - SN3062; ConvF(3.97, 3.97, 3.97); Calibrated: 2010-01-15
- Sensor-Surface: 4mm (Mechanical Surface Detection (Locations From Previous Scan Used))
  Sensor-Surface: 4mm (Mechanical Surface Detection)
- Electronics: DAE3 Sn433; Calibrated: 2010-01-15
- Phantom: SAM 2; Type: SAM QD 000 P40 CB; Serial: TP-1396
- Measurement SW: DASY4, V4.7 Build 80; Postprocessing SW: SEMCAD, V1.8 Build 186

Mid, Front/Area Scan (61x111x1): Measurement grid: dx=10mm, dy=10mm
Maximum value of SAR (interpolated) = 0.066 mW/g

Mid, Front/Zoom Scan (5x5x7)/Cube 0: Measurement grid: dx=8mm, dy=8mm, dz=5mm
Reference Value = 4.39 V/m; Power Drift = 0.032 dB
Peak SAR (extrapolated) = 0.101 W/kg
SAR(1 g) = 0.057 mW/g; SAR(10 g) = 0.033 mW/g
Maximum value of SAR (measured) = 0.063 mW/g

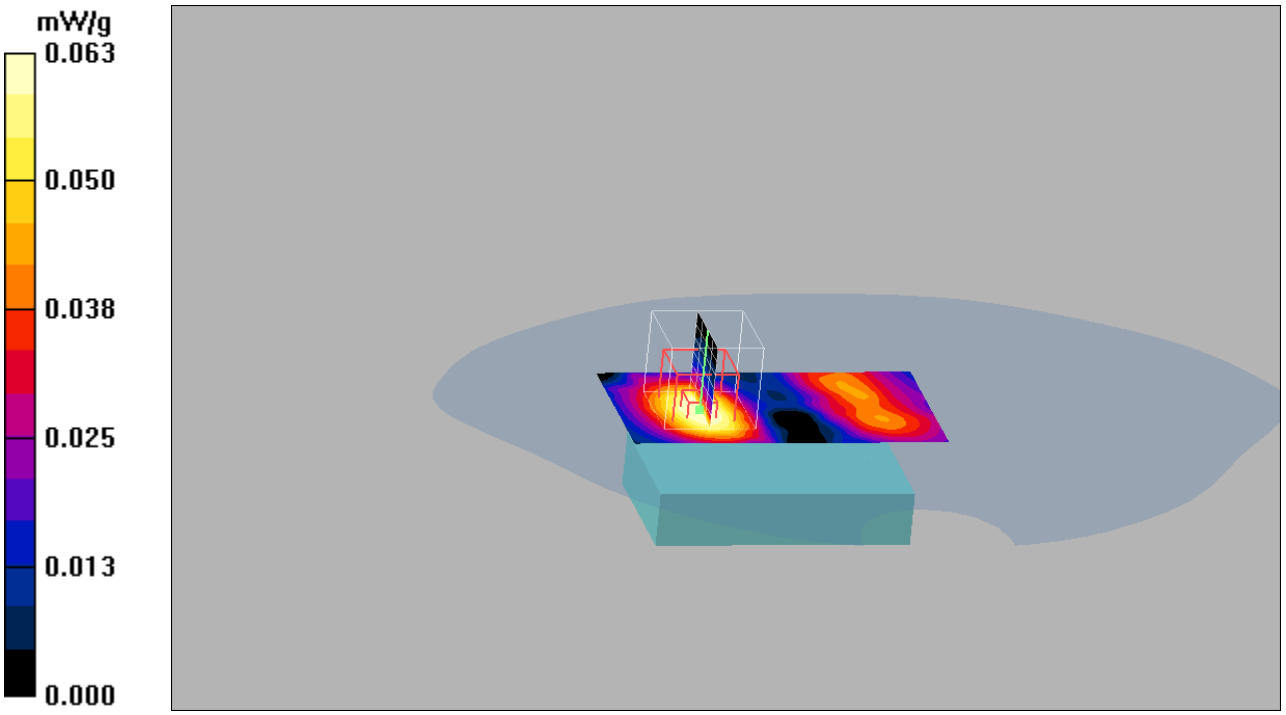

Calibration Laboratory of
Schmid & Partner
Engineering AG
Zeughausstrasse 43, 8004 Zurich, Switzerland

S Schweizerischer Kalibrierdienst
C Service suisse d'étalonnage
Servizio svizzero di taratura
S Swiss Calibration Service

Accredited by the Swiss Accreditation Service (SAS)
The Swiss Accreditation Service is one of the signatories to the EA Multilateral Agreement for the recognition of calibration certificates

Accreditation No.: SCS 108

Client **Sony Ericsson Lund**

Certificate No: D1900V2-5d002-Jan09

CALIBRATION CERTIFICATE

Object	D1900V2 - SN: 5d002
Calibration procedure(s)	QA CAL-05.v7 Calibration procedure for dipole validation kits
Calibration date:	January 13, 2009
Condition of the calibrated item	In Tolerance

This calibration certificate documents the traceability to national standards, which realize the physical units of measurements (SI).
The measurements and the uncertainties with confidence probability are given on the following pages and are part of the certificate.

All calibrations have been conducted in the closed laboratory facility: environment temperature (22 ± 3)°C and humidity < 70%.

Calibration Equipment used (M&TE critical for calibration)

Primary Standards	ID #	Cal Date (Calibrated by, Certificate No.)	Scheduled Calibration
Power meter EPM-442A	GB37480704	08-Oct-08 (No. 217-00898)	Oct-09
Power sensor HP 8481A	US37292783	08-Oct-08 (No. 217-00898)	Oct-09
Reference 20 dB Attenuator	SN: 5086 (20g)	01-Jul-08 (No. 217-00864)	Jul-09
Type-N mismatch combination	SN: 5047.2 / 06327	01-Jul-08 (No. 217-00867)	Jul-09
Reference Probe ES3DV2	SN: 3025	28-Apr-08 (No. ES3-3025_Apr08)	Apr-09
DAE4	SN: 601	14-Mar-08 (No. DAE4-601_Mar08)	Mar-09

Secondary Standards	ID #	Check Date (in house)	Scheduled Check
Power sensor HP 8481A	MY41092317	18-Oct-02 (in house check Oct-07)	In house check: Oct-09
RF generator R&S SMT-06	100005	4-Aug-99 (in house check Oct-07)	In house check: Oct-09
Network Analyzer HP 8753E	US37390585 S4206	18-Oct-01 (in house check Oct-08)	In house check: Oct-09

	Name	Function	Signature
Calibrated by:	Jeton Kastrati	Laboratory Technician	
Approved by:	Katja Pokovic	Technical Manager	

Issued: January 13, 2009

This calibration certificate shall not be reproduced except in full without written approval of the laboratory.

Glossary:

TSL	tissue simulating liquid
ConvF	sensitivity in TSL / NORM x,y,z
N/A	not applicable or not measured

Calibration is Performed According to the Following Standards:

a) IEEE Std 1528-2003, "IEEE Recommended Practice for Determining the Peak Spatial-Averaged Specific Absorption Rate (SAR) in the Human Head from Wireless Communications Devices: Measurement Techniques", December 2003
b) CENELEC EN 50361, "Basic standard for the measurement of Specific Absorption Rate related to human exposure to electromagnetic fields from mobile phones (300 MHz - 3 GHz), July 2001
c) Federal Communications Commission Office of Engineering & Technology (FCC OET), "Evaluating Compliance with FCC Guidelines for Human Exposure to Radiofrequency Electromagnetic Fields; Additional Information for Evaluating Compliance of Mobile and Portable Devices with FCC Limits for Human Exposure to Radiofrequency Emissions", Supplement C (Edition 01-01) to Bulletin 65

Additional Documentation:

d) DASY4/5 System Handbook

Methods Applied and Interpretation of Parameters:

- *Measurement Conditions:* Further details are available from the Validation Report at the end of the certificate. All figures stated in the certificate are valid at the frequency indicated.
- *Antenna Parameters with TSL:* The dipole is mounted with the spacer to position its feed point exactly below the center marking of the flat phantom section, with the arms oriented parallel to the body axis.
- *Feed Point Impedance and Return Loss:* These parameters are measured with the dipole positioned under the liquid filled phantom. The impedance stated is transformed from the measurement at the SMA connector to the feed point. The Return Loss ensures low reflected power. No uncertainty required.
- *Electrical Delay:* One-way delay between the SMA connector and the antenna feed point. No uncertainty required.
- *SAR measured:* SAR measured at the stated antenna input power.
- *SAR normalized:* SAR as measured, normalized to an input power of 1 W at the antenna connector.
- SAR for nominal TSL parameters: The measured TSL parameters are used to calculate the nominal SAR result.

Measurement Conditions

DASY system configuration, as far as not given on page 1.

DASY Version	DASY5	V5.0
Extrapolation	Advanced Extrapolation	
Phantom	Modular Flat Phantom V5.0	
Distance Dipole Center - TSL	10 mm	with Spacer
Zoom Scan Resolution	dx, dy, dz = 5 mm	
Frequency	1900 MHz ± 1 MHz	

Head TSL parameters

The following parameters and calculations were applied.

	Temperature	**Permittivity**	**Conductivity**
Nominal Head TSL parameters	22.0 °C	40.0	1.40 mho/m
Measured Head TSL parameters	(22.0 ± 0.2) °C	39.2 ± 6 %	1.47 mho/m ± 6 %
Head TSL temperature during test	(21.0 ± 0.2) °C	----	----

.

SAR result with Head TSL

SAR averaged over 1 cm^3 (1 g) of Head TSL	condition	
SAR measured	250 mW input power	10.3 mW / g
SAR normalized	normalized to 1W	41.2 mW / g
SAR for nominal Head TSL parameters [1]	normalized to 1W	**39.9 mW / g ± 17.0 % (k=2)**

SAR averaged over 10 cm^3 (10 g) of Head TSL	Condition	
SAR measured	250 mW input power	5.32 mW / g
SAR normalized	normalized to 1W	21.3 mW / g
SAR for nominal Head TSL parameters [1]	normalized to 1W	**20.9 mW / g ± 16.5 % (k=2)**

[1] Correction to nominal TSL parameters according to d), chapter "SAR Sensitivities"

Body TSL parameters

The following parameters and calculations were applied.

	Temperature	Permittivity	Conductivity
Nominal Body TSL parameters	22.0 °C	53.3	1.52 mho/m
Measured Body TSL parameters	(22.0 ± 0.2) °C	54.7 ± 6 %	1.57 mho/m ± 6 %
Body TSL temperature during test	(21.0 ± 0.2) °C	----	----

SAR result with Body TSL

SAR averaged over 1 cm^3 (1 g) of Body TSL	Condition	
SAR measured	250 mW input power	10.5 mW / g
SAR normalized	normalized to 1W	42.0 mW / g
SAR for nominal Body TSL parameters [2]	normalized to 1W	**41.5 mW / g ± 17.0 % (k=2)**

SAR averaged over 10 cm^3 (10 g) of Body TSL	condition	
SAR measured	250 mW input power	5.54 mW / g
SAR normalized	normalized to 1W	22.2 mW / g
SAR for nominal Body TSL parameters [2]	normalized to 1W	**22.1 mW / g ± 16.5 % (k=2)**

[2] Correction to nominal TSL parameters according to d), chapter "SAR Sensitivities"

Appendix

Antenna Parameters with Head TSL

Impedance, transformed to feed point	50.0 Ω + 1.7 jΩ
Return Loss	- 35.4 dB

Antenna Parameters with Body TSL

Impedance, transformed to feed point	46.3 Ω + 2.6 jΩ
Return Loss	- 26.7 dB

General Antenna Parameters and Design

Electrical Delay (one direction)	1.177 ns

After long term use with 100W radiated power, only a slight warming of the dipole near the feedpoint can be measured.

The dipole is made of standard semirigid coaxial cable. The center conductor of the feeding line is directly connected to the second arm of the dipole. The antenna is therefore short-circuited for DC-signals.
No excessive force must be applied to the dipole arms, because they might bend or the soldered connections near the feedpoint may be damaged.

Additional EUT Data

Manufactured by	SPEAG
Manufactured on	February 14, 2002

DASY5 Validation Report for Head TSL

Date/Time: 06.01.2009 13:38:20

Test Laboratory: SPEAG, Zurich, Switzerland

DUT: Dipole 1900 MHz; Type: D1900V2; Serial: D1900V2 - SN:5d002

Communication System: CW; Frequency: 1900 MHz; Duty Cycle: 1:1
Medium: HSL U10 BB
Medium parameters used: f = 1900 MHz; σ = 1.47 mho/m; ε_r = 39.4; ρ = 1000 kg/m^3
Phantom section: Flat Section
Measurement Standard: DASY5 (IEEE/IEC)

DASY5 Configuration:

- Probe: ES3DV2 - SN3025; ConvF(4.9, 4.9, 4.9); Calibrated: 28.04.2008
- Sensor-Surface: 3.4mm (Mechanical Surface Detection)
- Electronics: DAE4 Sn601; Calibrated: 14.03.2008
- Phantom: Flat Phantom 5.0 (front); Type: QD000P50AA; Serial: 1001
- Measurement SW: DASY5, V5.0 Build 120; SEMCAD X Version 13.4 Build 45

Pin = 250 mW; dip = 10 mm, scan at 3.4mm/Zoom Scan (dist=3.4mm, probe 0deg) (7x7x7)/Cube 0: Measurement grid: dx=5mm, dy=5mm, dz=5mm
Reference Value = 92.6 V/m; Power Drift = 0.016 dB
Peak SAR (extrapolated) = 19.1 W/kg
SAR(1 g) = 10.3 mW/g; SAR(10 g) = 5.32 mW/g
Maximum value of SAR (measured) = 12 mW/g

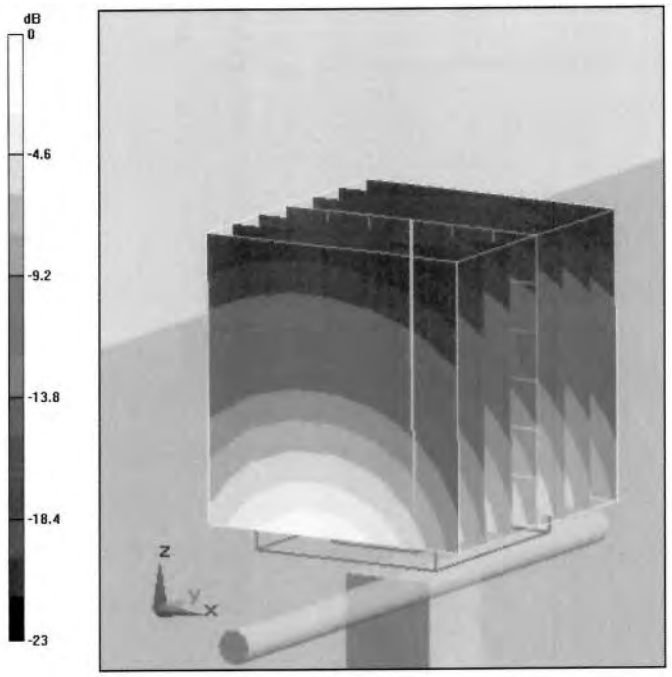

0 dB = 12mW/g

Impedance Measurement Plot for Head TSL

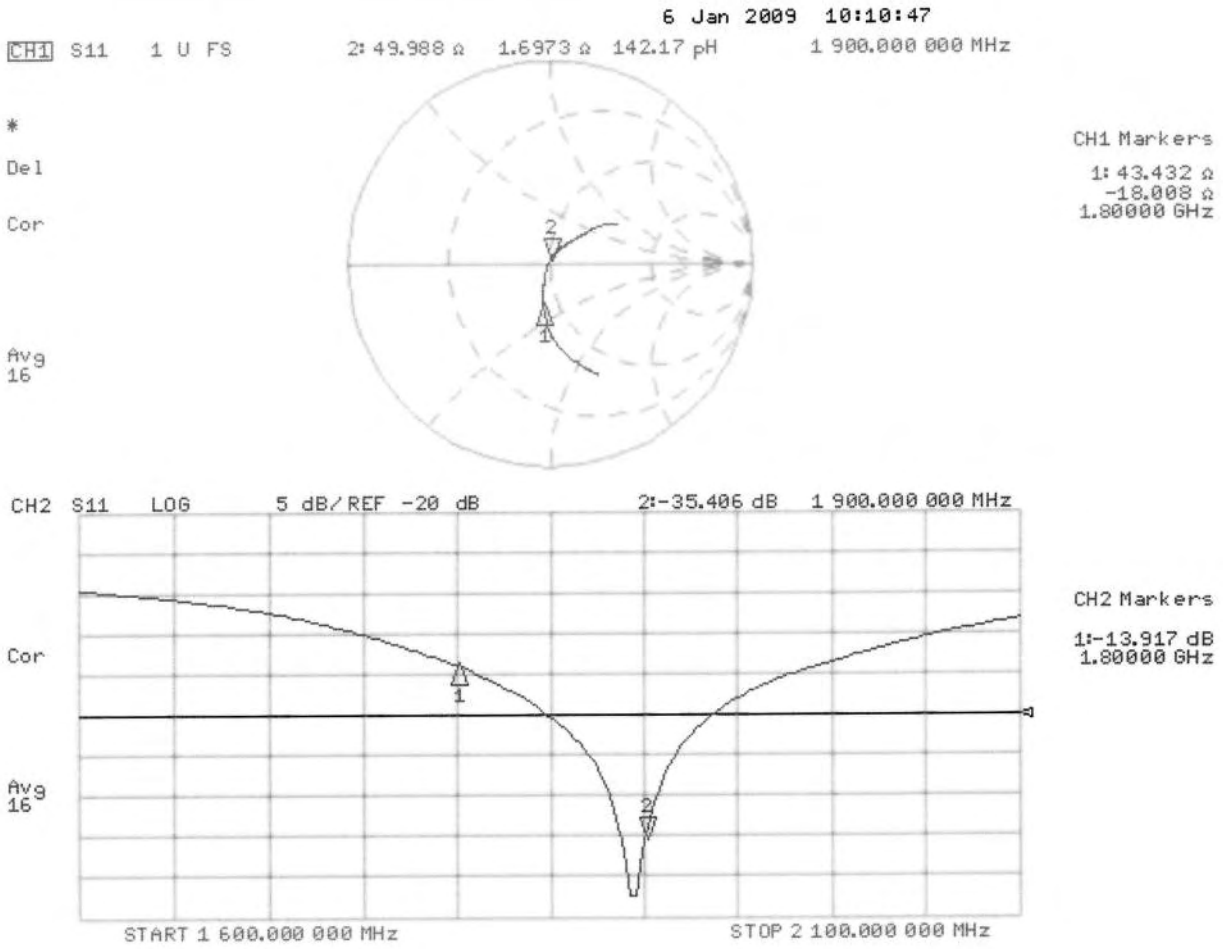

DASY5 Validation Report for Body TSL

Date/Time: 13.01.2009 13:28:04

Test Laboratory: SPEAG, Zurich, Switzerland

DUT: Dipole 1900 MHz; Type: D1900V2; Serial: D1900V2 - SN:5d002

Communication System: CW; Frequency: 1900 MHz; Duty Cycle: 1:1
Medium: MSL U10 BB
Medium parameters used: f = 1900 MHz; σ = 1.57 mho/m; ε_r = 54.9; ρ = 1000 kg/m^3
Phantom section: Flat Section
Measurement Standard: DASY5 (IEEE/IEC)

DASY5 Configuration:

- Probe: ES3DV2 - SN3025; ConvF(4.5, 4.5, 4.5); Calibrated: 28.04.2008
- Sensor-Surface: 3.4mm (Mechanical Surface Detection)
- Electronics: DAE4 Sn601; Calibrated: 14.03.2008
- Phantom: Flat Phantom 5.0 (back); Type: QD000P50AA; Serial: 1002
- Measurement SW: DASY5, V5.0 Build 120; SEMCAD X Version 13.4 Build 45

Pin = 250 mW; dip = 10 mm, scan at 3.4mm 2 2/Zoom Scan (dist=3.4mm, probe 0deg) (7x7x7)/Cube 0: Measurement grid: dx=5mm, dy=5mm, dz=5mm
Reference Value = 92.6 V/m; Power Drift = 0.00319 dB
Peak SAR (extrapolated) = 18.5 W/kg
SAR(1 g) = 10.5 mW/g; SAR(10 g) = 5.54 mW/g
Maximum value of SAR (measured) = 12.6 mW/g

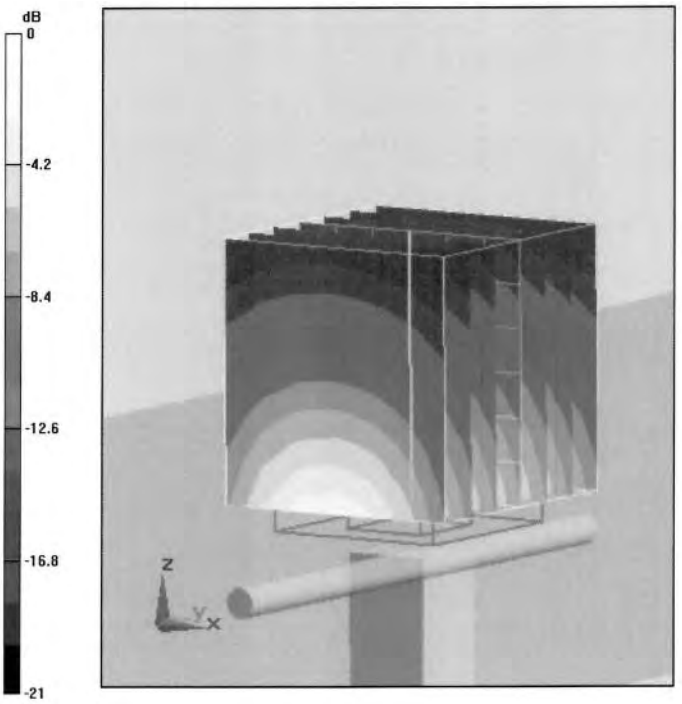

0 dB = 12.6mW/g

Impedance Measurement Plot for Body TSL

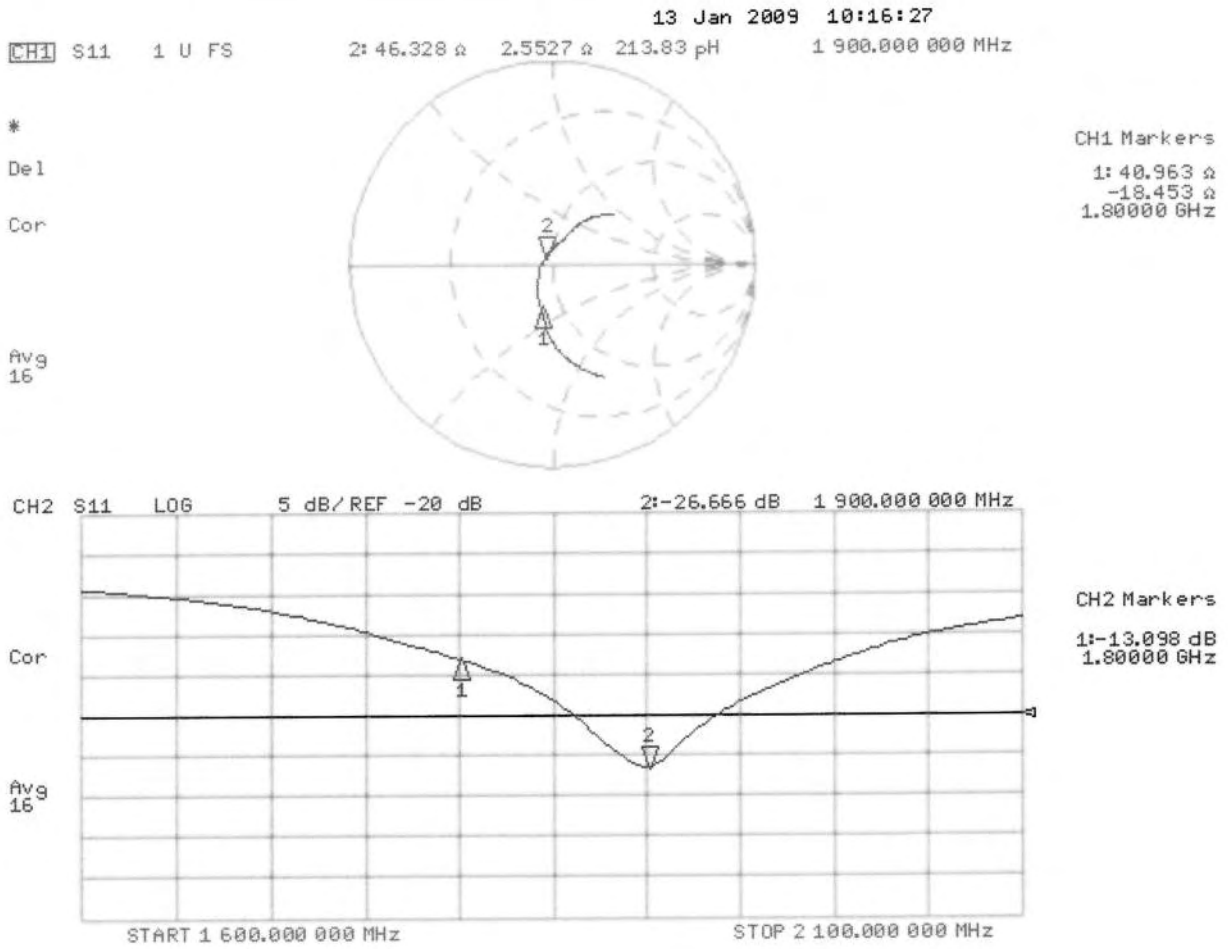

Calibration Laboratory of
Schmid & Partner
Engineering AG
Zeughausstrasse 43, 8004 Zurich, Switzerland

S Schweizerischer Kalibrierdienst
C Service suisse d'étalonnage
Servizio svizzero di taratura
S Swiss Calibration Service

Accredited by the Swiss Accreditation Service (SAS)
The Swiss Accreditation Service is one of the signatories to the EA Multilateral Agreement for the recognition of calibration certificates

Accreditation No.: SCS 108

Client **Sony Ericsson Lund**

Certificate No: D2450V2-745_Mar09

CALIBRATION CERTIFICATE

Object	D2450V2 - SN: 745
Calibration procedure(s)	QA CAL-05.v7 Calibration procedure for dipole validation kits
Calibration date:	March 10, 2009
Condition of the calibrated item	In Tolerance

This calibration certificate documents the traceability to national standards, which realize the physical units of measurements (SI).
The measurements and the uncertainties with confidence probability are given on the following pages and are part of the certificate.

All calibrations have been conducted in the closed laboratory facility: environment temperature (22 ± 3)°C and humidity < 70%.

Calibration Equipment used (M&TE critical for calibration)

Primary Standards	ID #	Cal Date (Calibrated by, Certificate No.)	Scheduled Calibration
Power meter EPM-442A	GB37480704	08-Oct-08 (No. 217-00898)	Oct-09
Power sensor HP 8481A	US37292783	08-Oct-08 (No. 217-00898)	Oct-09
Reference 20 dB Attenuator	SN: 5086 (20g)	01-Jul-08 (No. 217-00864)	Jul-09
Type-N mismatch combination	SN: 5047.2 / 06327	01-Jul-08 (No. 217-00867)	Jul-09
Reference Probe ES3DV2	SN: 3025	28-Apr-08 (No. ES3-3025_Apr08)	Apr-09
DAE4	SN: 601	14-Mar-08 (No. DAE4-601_Mar08)	Mar-09
DAE4	SN: 601	07-Mar-09 (No. DAE4-601_Mar09)	Mar-10

Secondary Standards	ID #	Check Date (in house)	Scheduled Check
Power sensor HP 8481A	MY41092317	18-Oct-02 (in house check Oct-07)	In house check: Oct-09
RF generator R&S SMT-06	100005	4-Aug-99 (in house check Oct-07)	In house check: Oct-09
Network Analyzer HP 8753E	US37390585 S4206	18-Oct-01 (in house check Oct-08)	In house check: Oct-09

	Name	Function	Signature
Calibrated by:	Jeton Kastrati	Laboratory Technician	
Approved by:	Katja Pokovic	Technical Manager	

Issued: March 13, 2009

Glossary:

TSL	tissue simulating liquid
ConvF	sensitivity in TSL / NORM x,y,z
N/A	not applicable or not measured

Calibration is Performed According to the Following Standards:

a) IEEE Std 1528-2003, "IEEE Recommended Practice for Determining the Peak Spatial-Averaged Specific Absorption Rate (SAR) in the Human Head from Wireless Communications Devices: Measurement Techniques", December 2003
b) IEC 62209-1, "Procedure to measure the Specific Absorption Rate (SAR) for hand-held devices used in close proximity to the ear (frequency range of 300 MHz to 3 GHz)", February 2005
c) Federal Communications Commission Office of Engineering & Technology (FCC OET), "Evaluating Compliance with FCC Guidelines for Human Exposure to Radiofrequency Electromagnetic Fields; Additional Information for Evaluating Compliance of Mobile and Portable Devices with FCC Limits for Human Exposure to Radiofrequency Emissions", Supplement C (Edition 01-01) to Bulletin 65

Additional Documentation:

d) DASY4/5 System Handbook

Methods Applied and Interpretation of Parameters:

- *Measurement Conditions:* Further details are available from the Validation Report at the end of the certificate. All figures stated in the certificate are valid at the frequency indicated.
- *Antenna Parameters with TSL:* The dipole is mounted with the spacer to position its feed point exactly below the center marking of the flat phantom section, with the arms oriented parallel to the body axis.
- *Feed Point Impedance and Return Loss:* These parameters are measured with the dipole positioned under the liquid filled phantom. The impedance stated is transformed from the measurement at the SMA connector to the feed point. The Return Loss ensures low reflected power. No uncertainty required.
- *Electrical Delay:* One-way delay between the SMA connector and the antenna feed point. No uncertainty required.
- *SAR measured:* SAR measured at the stated antenna input power.
- *SAR normalized:* SAR as measured, normalized to an input power of 1 W at the antenna connector.
- *SAR for nominal TSL parameters:* The measured TSL parameters are used to calculate the nominal SAR result.

Measurement Conditions

DASY system configuration, as far as not given on page 1.

DASY Version	DASY5	V5.0
Extrapolation	Advanced Extrapolation	
Phantom	Modular Flat Phantom V5.0	
Distance Dipole Center - TSL	10 mm	with Spacer
Zoom Scan Resolution	dx, dy, dz = 5 mm	
Frequency	2450 MHz ± 1 MHz	

Head TSL parameters

The following parameters and calculations were applied.

	Temperature	**Permittivity**	**Conductivity**
Nominal Head TSL parameters	22.0 °C	39.2	1.80 mho/m
Measured Head TSL parameters	(22.0 ± 0.2) °C	38.0 ± 6 %	1.82 mho/m ± 6 %
Head TSL temperature during test	(21.0 ± 0.2) °C	----	----

SAR result with Head TSL

SAR averaged over 1 cm^3 (1 g) of Head TSL	Condition	
SAR measured	250 mW input power	13.4 mW / g
SAR normalized	normalized to 1W	53.6 mW / g
SAR for nominal Head TSL parameters [1]	normalized to 1W	**52.9 mW /g ± 17.0 % (k=2)**

SAR averaged over 10 cm^3 (10 g) of Head TSL	condition	
SAR measured	250 mW input power	6.22 mW / g
SAR normalized	normalized to 1W	24.9 mW / g
SAR for nominal Head TSL parameters [1]	normalized to 1W	**24.7 mW /g ± 16.5 % (k=2)**

[1] Correction to nominal TSL parameters according to d), chapter "SAR Sensitivities"

Body TSL parameters

The following parameters and calculations were applied.

	Temperature	Permittivity	Conductivity
Nominal Body TSL parameters	22.0 °C	52.7	1.95 mho/m
Measured Body TSL parameters	(22.0 ± 0.2) °C	54.3 ± 6 %	1.99 mho/m ± 6 %
Body TSL temperature during test	(21.1 ± 0.2) °C	----	---

SAR result with Body TSL

SAR averaged over 1 cm^3 (1 g) of Body TSL	Condition	
SAR measured	250 mW input power	13.1 mW / g
SAR normalized	normalized to 1W	52.4 mW / g
SAR for nominal Body TSL parameters [2]	normalized to 1W	**52.1 mW /g ± 17.0 % (k=2)**

SAR averaged over 10 cm^3 (10 g) of Body TSL	condition	
SAR measured	250 mW input power	6.11 mW / g
SAR normalized	normalized to 1W	24.4 mW / g
SAR for nominal Body TSL parameters [2]	normalized to 1W	**24.4 mW /g ± 16.5 % (k=2)**

[2] Correction to nominal TSL parameters according to d), chapter "SAR Sensitivities"

Appendix

Antenna Parameters with Head TSL

Impedance, transformed to feed point	57.1 Ω - 1.8 jΩ
Return Loss	- 23.3 dB

Antenna Parameters with Body TSL

Impedance, transformed to feed point	51.9 Ω + 5.0 jΩ
Return Loss	- 25.6 dB

General Antenna Parameters and Design

Electrical Delay (one direction)	1.162 ns

After long term use with 100W radiated power, only a slight warming of the dipole near the feedpoint can be measured.

The dipole is made of standard semirigid coaxial cable. The center conductor of the feeding line is directly connected to the second arm of the dipole. The antenna is therefore short-circuited for DC-signals.
No excessive force must be applied to the dipole arms, because they might bend or the soldered connections near the feedpoint may be damaged.

Additional EUT Data

Manufactured by	SPEAG
Manufactured on	December 01, 2003

DASY5 Validation Report for Head TSL

Date/Time: 03.03.2009 14:36:21

Test Laboratory: SPEAG, Zurich, Switzerland

DUT: Dipole 2450 MHz; Type: D2450V2; Serial: D2450V2 - SN745

Communication System: CW; Frequency: 2450 MHz; Duty Cycle: 1:1
Medium: HSL U10 BB
Medium parameters used: f = 2450 MHz; σ = 1.83 mho/m; ε_r = 38.1; ρ = 1000 kg/m^3
Phantom section: Flat Section
Measurement Standard: DASY5 (IEEE/IEC)

DASY5 Configuration:

- Probe: ES3DV2 - SN3025; ConvF(4.4, 4.4, 4.4); Calibrated: 28.04.2008
- Sensor-Surface: 3.4mm (Mechanical Surface Detection)
- Electronics: DAE4 Sn601; Calibrated: 14.03.2008
- Phantom: Flat Phantom 5.0 (front); Type: QD000P50AA; Serial: 1001
- Measurement SW: DASY5, V5.0 Build 120; SEMCAD X Version 13.4 Build 45

Pin = 250 mW; d = 10 mm/Zoom Scan (7x7x7)/Cube 0: Measurement grid: dx=5mm, dy=5mm, dz=5mm
Reference Value = 93.7 V/m; Power Drift = 0.086 dB
Peak SAR (extrapolated) = 28.4 W/kg
SAR(1 g) = 13.4 mW/g; SAR(10 g) = 6.22 mW/g
Maximum value of SAR (measured) = 16.4 mW/g

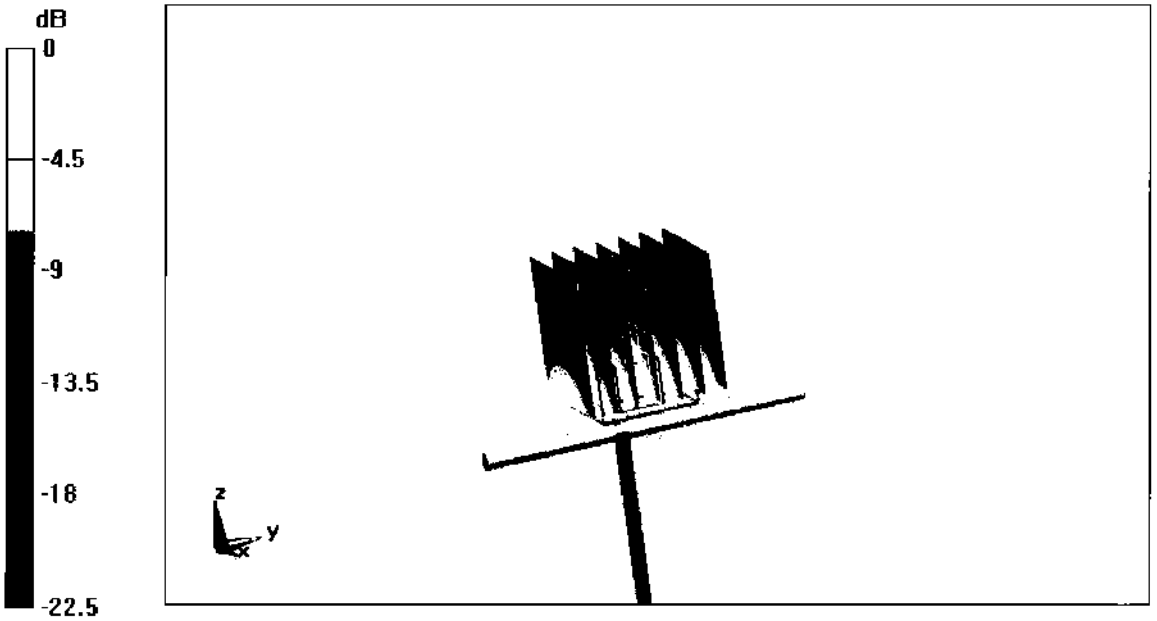

0 dB = 16.4mW/g

Impedance Measurement Plot for Head TSL

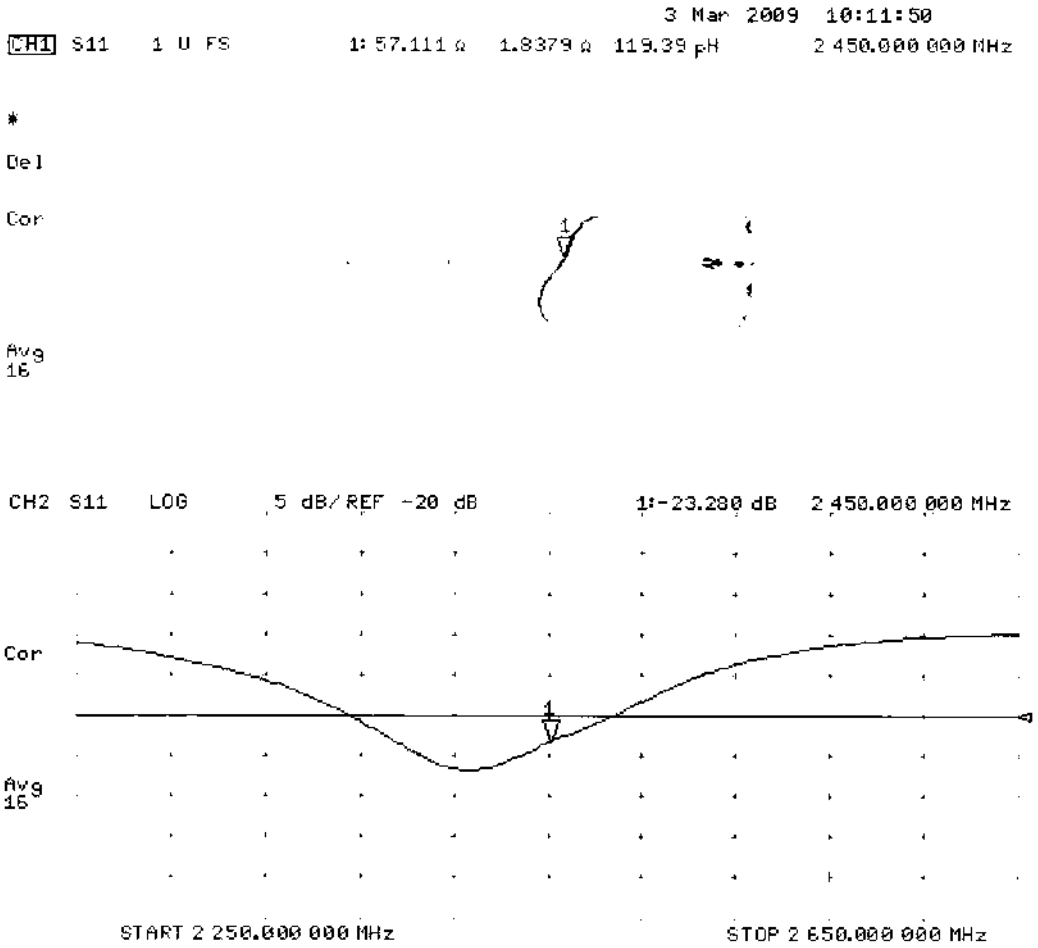

DASY5 Validation Report for Body TSL

Date/Time: 10.03.2009 14:42:41

Test Laboratory: SPEAG, Zurich, Switzerland

DUT: Dipole 2450 MHz; Type: D2450V2; Serial: D2450V2 - SN:745

Communication System: CW; Frequency: 2450 MHz; Duty Cycle: 1:1
Medium: MSL U10 BB
Medium parameters used: f = 2450 MHz; σ = 2 mho/m; ε_r = 54.4; ρ = 1000 kg/m^3
Phantom section: Flat Section
Measurement Standard: DASY5 (IEEE/IEC)

DASY5 Configuration:

- Probe: ES3DV2 - SN3025; ConvF(4.07, 4.07, 4.07); Calibrated: 28.04.2008
- Sensor-Surface: 3.4mm (Mechanical Surface Detection)
- Electronics: DAE4 Sn601; Calibrated: 07.03.2009
- Phantom: Flat Phantom 5.0 (back); Type: QD000P50AA; Serial: 1002
- Measurement SW: DASY5, V5.0 Build 120; SEMCAD X Version 13.4 Build 45

Pin = 250 mW; d = 10 mm/Zoom Scan (7x7x7)/Cube 0: Measurement grid: dx=5mm, dy=5mm, dz=5mm
Reference Value = 92.7 V/m; Power Drift = 0.00783 dB
Peak SAR (extrapolated) = 26.4 W/kg
SAR(1 g) = 13.1 mW/g; SAR(10 g) = 6.11 mW/g
Maximum value of SAR (measured) = 16.3 mW/g

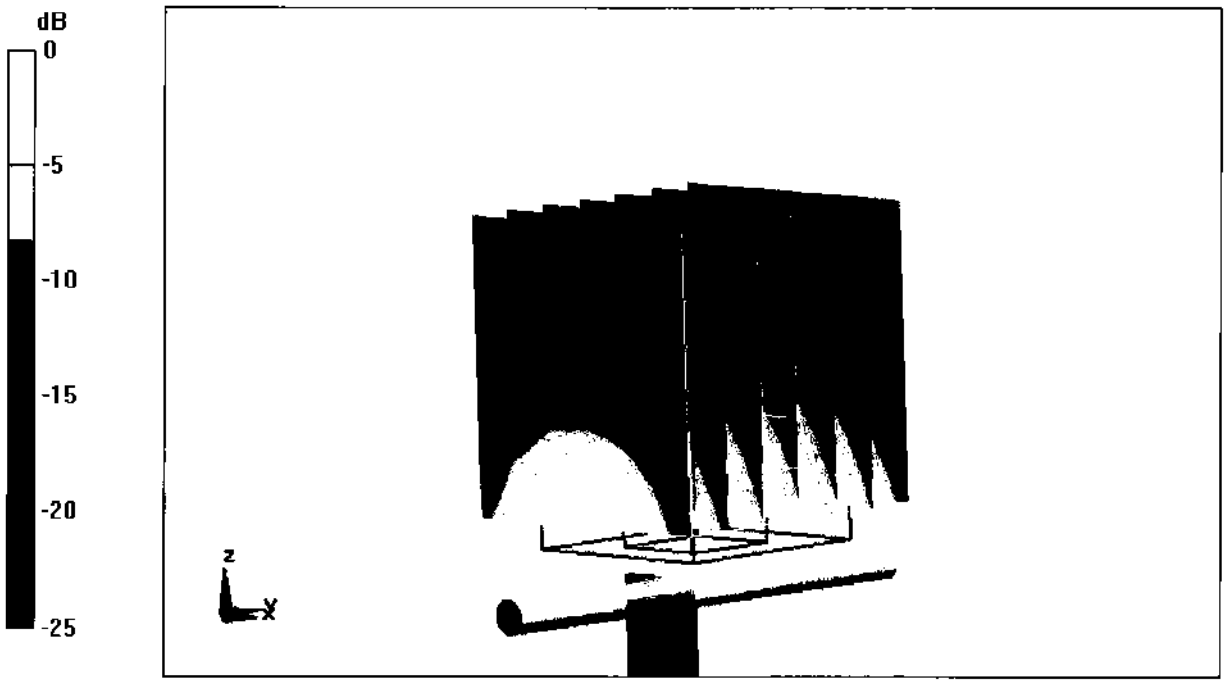

0 dB = 16.3mW/g

Impedance Measurement Plot for Body TSL

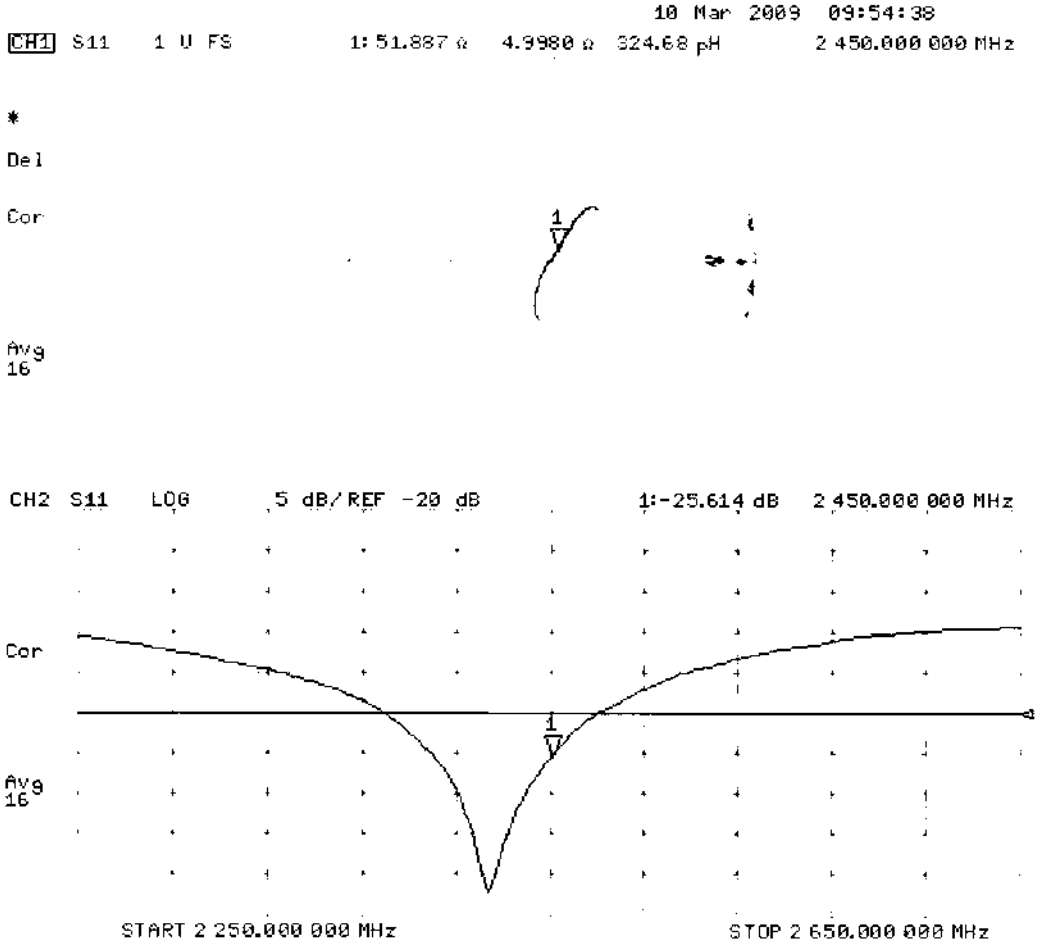

Calibration Laboratory of
Schmid & Partner
Engineering AG
Zeughausstrasse 43, 8004 Zurich, Switzerland

S Schweizerischer Kalibrierdienst
C Service suisse d'étalonnage
Servizio svizzero di taratura
S Swiss Calibration Service

Accredited by the Swiss Accreditation Service (SAS)
The Swiss Accreditation Service is one of the signatories to the EA Multilateral Agreement for the recognition of calibration certificates

Accreditation No.: SCS 108

Client **Sony Ericsson Lund**

Certificate No: ES3-3062_Jan10

CALIBRATION CERTIFICATE

Object	ES3DV3 - SN:3062
Calibration procedure(s)	QA CAL-01.v6, QA CAL-23.v3 and QA CAL-25.v2 Calibration procedure for dosimetric E-field probes
Calibration date:	January 15, 2010

This calibration certificate documents the traceability to national standards, which realize the physical units of measurements (SI).
The measurements and the uncertainties with confidence probability are given on the following pages and are part of the certificate.

All calibrations have been conducted in the closed laboratory facility: environment temperature (22 ± 3)°C and humidity < 70%.

Calibration Equipment used (M&TE critical for calibration)

Primary Standards	ID #	Cal Date (Certificate No.)	Scheduled Calibration
Power meter E4419B	GB41293874	1-Apr-09 (No. 217-01030)	Apr-10
Power sensor E4412A	MY41495277	1-Apr-09 (No. 217-01030)	Apr-10
Power sensor E4412A	MY41498087	1-Apr-09 (No. 217-01030)	Apr-10
Reference 3 dB Attenuator	SN: S5054 (3c)	31-Mar-09 (No. 217-01026)	Mar-10
Reference 20 dB Attenuator	SN: S5086 (20b)	31-Mar-09 (No. 217-01028)	Mar-10
Reference 30 dB Attenuator	SN: S5129 (30b)	31-Mar-09 (No. 217-01027)	Mar-10
Reference Probe ES3DV2	SN: 3013	30-Dec-09 (No. ES3-3013_Dec09)	Dec-10
DAE4	SN: 660	29-Sep-09 (No. DAE4-660_Sep09)	Sep-10

Secondary Standards	ID #	Check Date (in house)	Scheduled Check
RF generator HP 8648C	US3642U01700	4-Aug-99 (in house check Oct-09)	In house check: Oct-11
Network Analyzer HP 8753E	US37390585	18-Oct-01 (in house check Oct-09)	In house check: Oct10

	Name	Function	Signature
Calibrated by:	Jeton Kastrati	Laboratory Technician	
Approved by:	Katja Pokovic	Technical Manager	

Issued: January 18, 2010

This calibration certificate shall not be reproduced except in full without written approval of the laboratory.

Glossary:

TSL	tissue simulating liquid
NORMx,y,z	sensitivity in free space
ConvF	sensitivity in TSL / NORMx,y,z
DCP	diode compression point
CF	crest factor (1/duty_cycle) of the RF signal
A, B, C	modulation dependent linearization parameters
Polarization φ	φ rotation around probe axis
Polarization ϑ	ϑ rotation around an axis that is in the plane normal to probe axis (at measurement center), i.e., $\vartheta = 0$ is normal to probe axis

Calibration is Performed According to the Following Standards:

a) IEEE Std 1528-2003, "IEEE Recommended Practice for Determining the Peak Spatial-Averaged Specific Absorption Rate (SAR) in the Human Head from Wireless Communications Devices: Measurement Techniques", December 2003
b) IEC 62209-1, "Procedure to measure the Specific Absorption Rate (SAR) for hand-held devices used in close proximity to the ear (frequency range of 300 MHz to 3 GHz)", February 2005

Methods Applied and Interpretation of Parameters:

- *NORMx,y,z:* Assessed for E-field polarization $\vartheta = 0$ ($f \leq 900$ MHz in TEM-cell; $f > 1800$ MHz: R22 waveguide). NORMx,y,z are only intermediate values, i.e., the uncertainties of NORMx,y,z does not effect the E^2-field uncertainty inside TSL (see below *ConvF*).
- *NORM(f)x,y,z = NORMx,y,z * frequency_response* (see Frequency Response Chart). This linearization is implemented in DASY4 software versions later than 4.2. The uncertainty of the frequency response is included in the stated uncertainty of *ConvF*.
- *DCPx,y,z:* DCP are numerical linearization parameters assessed based on the data of power sweep with CW signal (no uncertainty required). DCP does not depend on frequency nor media.
- *Ax,y,z; Bx,y,z; Cx,y,z, VRx,y,z: A, B, C* are numerical linearization parameters assessed based on the data of power sweep for specific modulation signal. The parameters do not depend on frequency nor media. *VR* is the maximum calibration range expressed in RMS voltage across the diode.
- *ConvF and Boundary Effect Parameters:* Assessed in flat phantom using E-field (or Temperature Transfer Standard for $f \leq 800$ MHz) and inside waveguide using analytical field distributions based on power measurements for $f > 800$ MHz. The same setups are used for assessment of the parameters applied for boundary compensation (alpha, depth) of which typical uncertainty values are given. These parameters are used in DASY4 software to improve probe accuracy close to the boundary. The sensitivity in TSL corresponds to *NORMx,y,z * ConvF* whereby the uncertainty corresponds to that given for *ConvF*. A frequency dependent *ConvF* is used in DASY version 4.4 and higher which allows extending the validity from ± 50 MHz to ± 100 MHz.
- *Spherical isotropy (3D deviation from isotropy)*: in a field of low gradients realized using a flat phantom exposed by a patch antenna.
- *Sensor Offset*: The sensor offset corresponds to the offset of virtual measurement center from the probe tip (on probe axis). No tolerance required.

Probe ES3DV3

SN:3062

Manufactured:	January 30, 2004
Last calibrated:	January 12, 2009
Recalibrated:	January 15, 2010

Calibrated for DASY Systems

(Note: non-compatible with DASY2 system!)

DASY - Parameters of Probe: ES3DV3 SN:3062

Basic Calibration Parameters

	Sensor X	Sensor Y	Sensor Z	Unc (k=2)
Norm ($\mu V/(V/m)^2$)[A]	1.18	1.28	1.11	± 10.1%
DCP (mV)[B]	92.8	92.1	92.5	

Modulation Calibration Parameters

UID	Communication System Name	PAR		A dB	B dBuV	C	VR mV	Unc[E] (k=2)
10000	CW	0.00	X	0.00	0.00	1.00	300.0	± 1.5%
			Y	0.00	0.00	1.00	300.0	
			Z	0.00	0.00	1.00	300.0	

The reported uncertainty of measurement is stated as the standard uncertainty of measurement multiplied by the coverage factor k=2, which for a normal distribution corresponds to a coverage probability of approximately 95%.

[A] The uncertainties of NormX,Y,Z do not affect the E^2-field uncertainty inside TSL (see Pages 5 and 6).

[B] Numerical linearization parameter: uncertainty not required.

[E] Uncertainty is determined using the maximum deviation from linear response applying recatangular distribution and is expressed for the square of the field value.

DASY - Parameters of Probe: ES3DV3 SN:3062

Calibration Parameter Determined in Head Tissue Simulating Media

f [MHz]	Validity [MHz][C]	Permittivity	Conductivity	ConvF X	ConvF Y	ConvF Z	Alpha	Depth	Unc (k=2)
835	± 50 / ± 100	41.5 ± 5%	0.90 ± 5%	5.91	5.91	5.91	0.81	1.08	± 11.0%
900	± 50 / ± 100	41.5 ± 5%	0.97 ± 5%	5.76	5.76	5.76	0.75	1.10	± 11.0%
1750	± 50 / ± 100	40.1 ± 5%	1.37 ± 5%	4.94	4.94	4.94	0.44	1.54	± 11.0%
1900	± 50 / ± 100	40.0 ± 5%	1.40 ± 5%	4.78	4.78	4.78	0.44	1.53	± 11.0%
2450	± 50 / ± 100	39.2 ± 5%	1.80 ± 5%	4.31	4.31	4.31	0.44	1.64	± 11.0%

[C] The validity of ± 100 MHz only applies for DASY v4.4 and higher (see Page 2). The uncertainty is the RSS of the ConvF uncertainty at calibration frequency and the uncertainty for the indicated frequency band.

DASY - Parameters of Probe: ES3DV3 SN:3062

Calibration Parameter Determined in Body Tissue Simulating Media

f [MHz]	Validity [MHz][C]	Permittivity	Conductivity	ConvF X	ConvF Y	ConvF Z	Alpha	Depth	Unc (k=2)
835	± 50 / ± 100	55.2 ± 5%	0.97 ± 5%	5.79	5.79	5.79	0.65	1.24	± 11.0%
900	± 50 / ± 100	55.0 ± 5%	1.05 ± 5%	5.66	5.66	5.66	0.71	1.21	± 11.0%
1750	± 50 / ± 100	53.4 ± 5%	1.49 ± 5%	4.63	4.63	4.63	0.35	2.11	± 11.0%
1900	± 50 / ± 100	53.3 ± 5%	1.52 ± 5%	4.38	4.38	4.38	0.28	2.76	± 11.0%
2450	± 50 / ± 100	52.7 ± 5%	1.95 ± 5%	3.97	3.97	3.97	0.52	1.44	± 11.0%

[C] The validity of ± 100 MHz only applies for DASY v4.4 and higher (see Page 2). The uncertainty is the RSS of the ConvF uncertainty at calibration frequency and the uncertainty for the indicated frequency band.

Frequency Response of E-Field

(TEM-Cell:ifi110 EXX, Waveguide: R22)

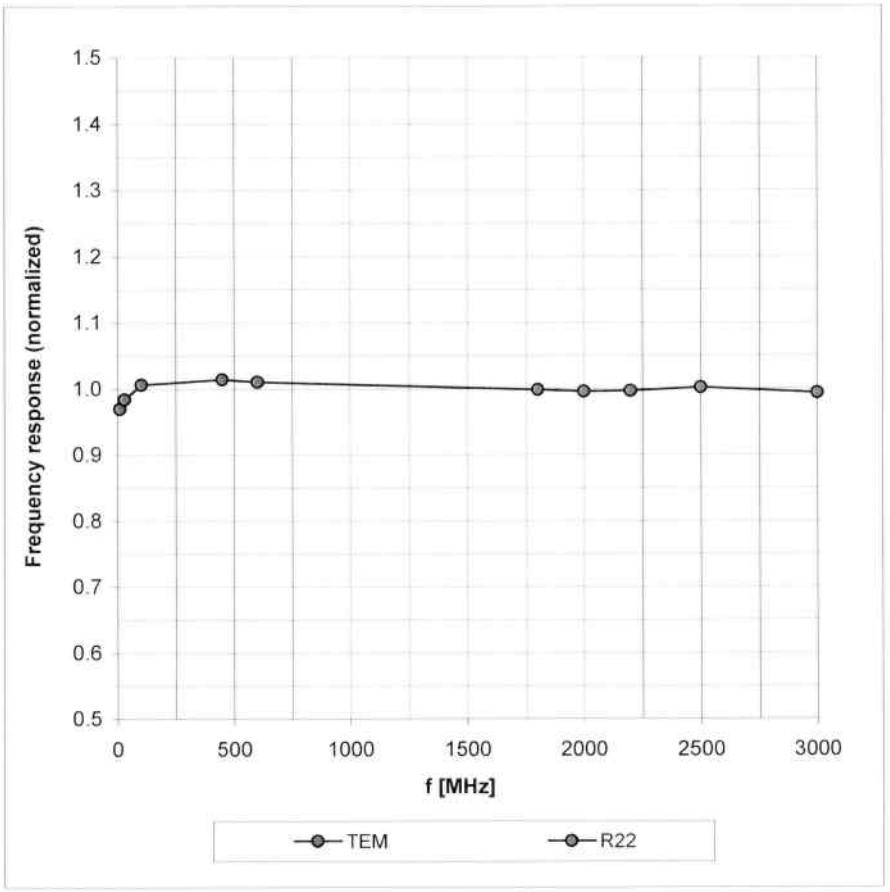

Uncertainty of Frequency Response of E-field: ± 6.3% (k=2)

Receiving Pattern (ϕ), ϑ = 0°

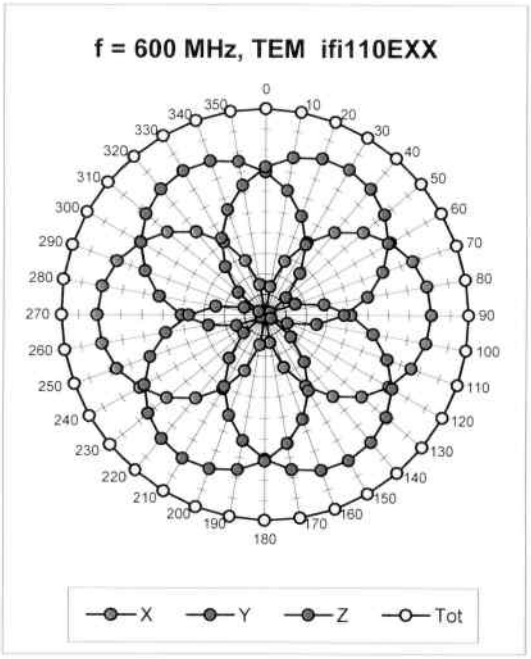

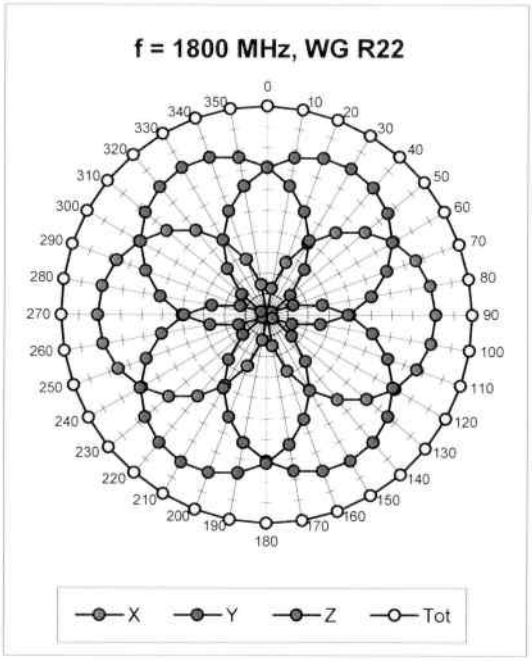

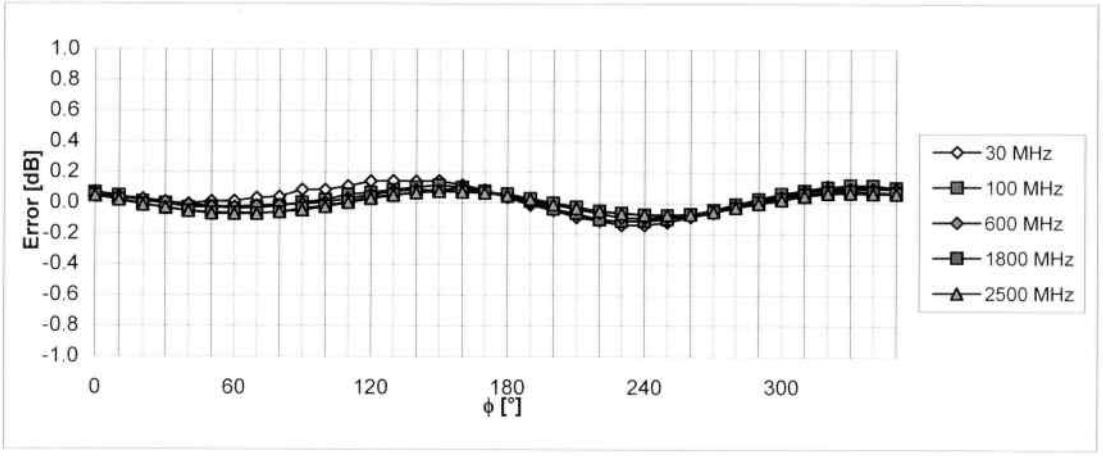

Uncertainty of Axial Isotropy Assessment: ± 0.5% (k=2)

Dynamic Range f(SAR_{head})

(Waveguide R22, f = 1800 MHz)

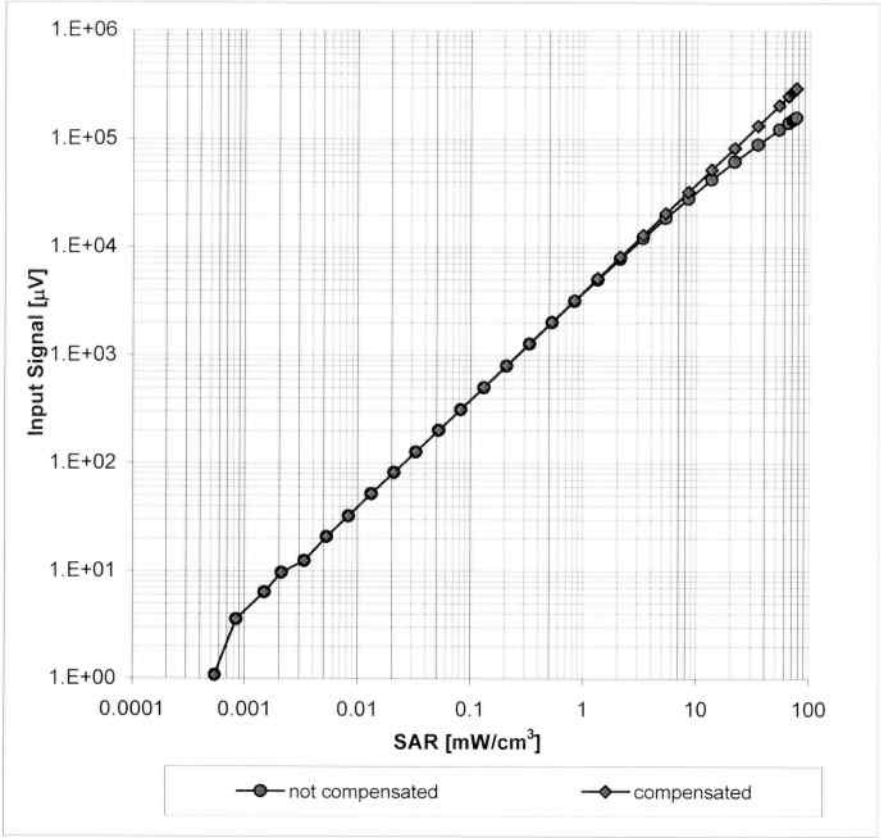

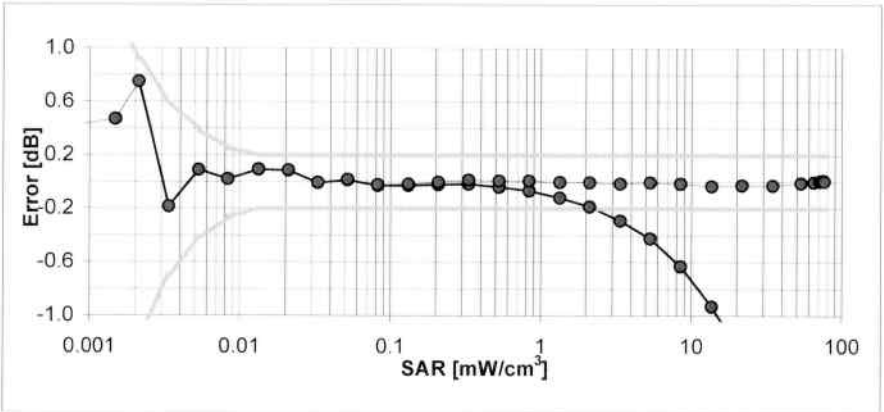

Uncertainty of Linearity Assessment: ± 0.6% (k=2)

Conversion Factor Assessment

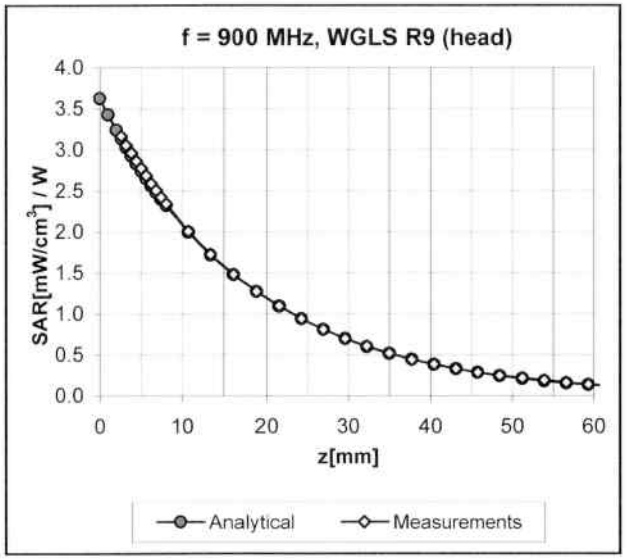

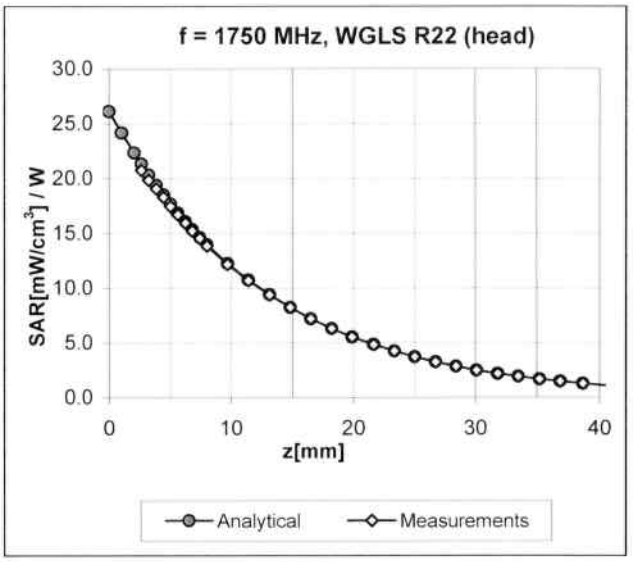

Deviation from Isotropy in HSL

Error (ϕ, ϑ), f = 900 MHz

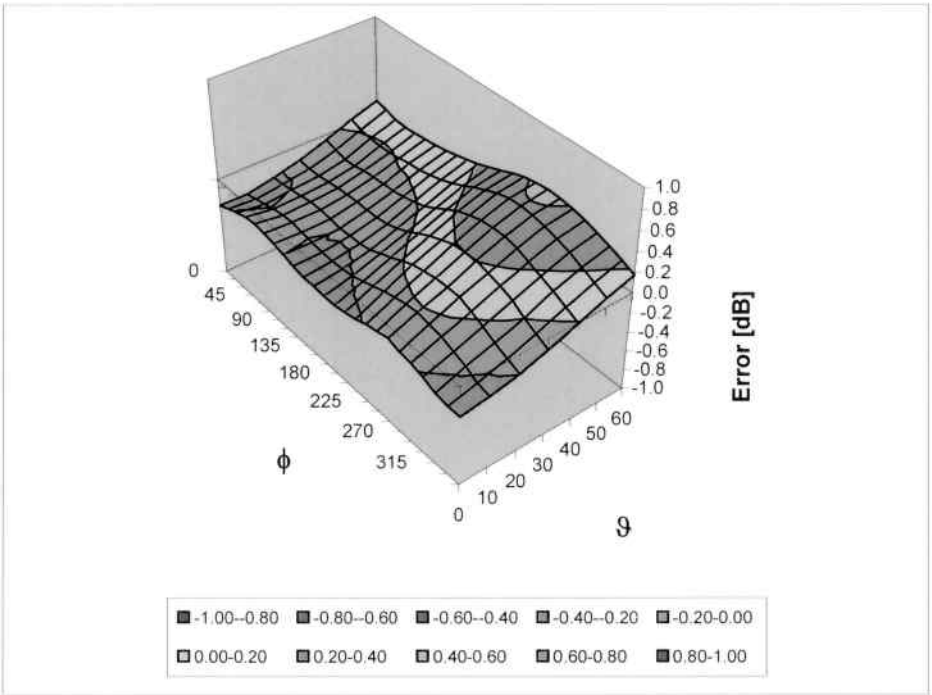

Uncertainty of Spherical Isotropy Assessment: ± 2.6% (k=2)

Other Probe Parameters

Sensor Arrangement	Triangular
Connector Angle (°)	Not applicable
Mechanical Surface Detection Mode	enabled
Optical Surface Detection Mode	disabled
Probe Overall Length	337 mm
Probe Body Diameter	10 mm
Tip Length	10 mm
Tip Diameter	4.0 mm
Probe Tip to Sensor X Calibration Point	2 mm
Probe Tip to Sensor Y Calibration Point	2 mm
Probe Tip to Sensor Z Calibration Point	2 mm
Recommended Measurement Distance from Surface	3 mm

Calibration Laboratory of
Schmid & Partner
Engineering AG
Zeughausstrasse 43, 8004 Zurich, Switzerland

S Schweizerischer Kalibrierdienst
C Service suisse d'étalonnage
Servizio svizzero di taratura
S Swiss Calibration Service

Accredited by the Swiss Accreditation Service (SAS)
The Swiss Accreditation Service is one of the signatories to the EA Multilateral Agreement for the recognition of calibration certificates

Accreditation No.: SCS 108

Client **Sony Ericsson Lund**

Certificate No: D835V2-4d039_Jan10

CALIBRATION CERTIFICATE

Object	D835V2 - SN: 4d039
Calibration procedure(s)	QA CAL-05.v7 Calibration procedure for dipole validation kits
Calibration date:	January 14, 2010

This calibration certificate documents the traceability to national standards, which realize the physical units of measurements (SI).
The measurements and the uncertainties with confidence probability are given on the following pages and are part of the certificate.

All calibrations have been conducted in the closed laboratory facility: environment temperature (22 ± 3)°C and humidity < 70%.

Calibration Equipment used (M&TE critical for calibration)

Primary Standards	ID #	Cal Date (Certificate No.)	Scheduled Calibration
Power meter EPM-442A	GB37480704	06-Oct-09 (No. 217-01086)	Oct-10
Power sensor HP 8481A	US37292783	06-Oct-09 (No. 217-01086)	Oct-10
Reference 20 dB Attenuator	SN: 5086 (20g)	31-Mar-09 (No. 217-01025)	Mar-10
Type-N mismatch combination	SN: 5047.2 / 06327	31-Mar-09 (No. 217-01029)	Mar-10
Reference Probe ES3DV3	SN: 3205	26-Jun-09 (No. ES3-3205_Jun09)	Jun-10
DAE4	SN: 601	07-Mar-09 (No. DAE4-601_Mar09)	Mar-10

Secondary Standards	ID #	Check Date (in house)	Scheduled Check
Power sensor HP 8481A	MY41092317	18-Oct-02 (in house check Oct-09)	In house check: Oct-11
RF generator R&S SMT-06	100005	4-Aug-99 (in house check Oct-09)	In house check: Oct-11
Network Analyzer HP 8753E	US37390585 S4206	18-Oct-01 (in house check Oct-09)	In house check: Oct-10

	Name	Function	Signature
Calibrated by:	Jeton Kastrati	Laboratory Technician	
Approved by:	Katja Pokovic	Technical Manager	

Issued: January 18, 2010

This calibration certificate shall not be reproduced except in full without written approval of the laboratory.

Glossary:

TSL	tissue simulating liquid
ConvF	sensitivity in TSL / NORM x,y,z
N/A	not applicable or not measured

Calibration is Performed According to the Following Standards:

a) IEEE Std 1528-2003, "IEEE Recommended Practice for Determining the Peak Spatial-Averaged Specific Absorption Rate (SAR) in the Human Head from Wireless Communications Devices: Measurement Techniques", December 2003
b) IEC 62209-1, "Procedure to measure the Specific Absorption Rate (SAR) for hand-held devices used in close proximity to the ear (frequency range of 300 MHz to 3 GHz)", February 2005
c) Federal Communications Commission Office of Engineering & Technology (FCC OET), "Evaluating Compliance with FCC Guidelines for Human Exposure to Radiofrequency Electromagnetic Fields; Additional Information for Evaluating Compliance of Mobile and Portable Devices with FCC Limits for Human Exposure to Radiofrequency Emissions", Supplement C (Edition 01-01) to Bulletin 65

Additional Documentation:

d) DASY4/5 System Handbook

Methods Applied and Interpretation of Parameters:

- *Measurement Conditions:* Further details are available from the Validation Report at the end of the certificate. All figures stated in the certificate are valid at the frequency indicated.
- *Antenna Parameters with TSL:* The dipole is mounted with the spacer to position its feed point exactly below the center marking of the flat phantom section, with the arms oriented parallel to the body axis.
- *Feed Point Impedance and Return Loss:* These parameters are measured with the dipole positioned under the liquid filled phantom. The impedance stated is transformed from the measurement at the SMA connector to the feed point. The Return Loss ensures low reflected power. No uncertainty required.
- *Electrical Delay:* One-way delay between the SMA connector and the antenna feed point. No uncertainty required.
- *SAR measured:* SAR measured at the stated antenna input power.
- *SAR normalized:* SAR as measured, normalized to an input power of 1 W at the antenna connector.
- *SAR for nominal TSL parameters:* The measured TSL parameters are used to calculate the nominal SAR result.

Measurement Conditions

DASY system configuration, as far as not given on page 1.

DASY Version	DASY5	V5.2
Extrapolation	Advanced Extrapolation	
Phantom	Modular Flat Phantom V4.9	
Distance Dipole Center - TSL	15 mm	with Spacer
Zoom Scan Resolution	dx, dy, dz = 5 mm	
Frequency	835 MHz ± 1 MHz	

Head TSL parameters

The following parameters and calculations were applied.

	Temperature	**Permittivity**	**Conductivity**
Nominal Head TSL parameters	22.2 °C	41.5	0.90 mho/m
Measured Head TSL parameters	(22.0 ± 0.2) °C	41.4 ± 6 %	0.89 mho/m ± 6 %
Head TSL temperature during test	(21.5 ± 0.2) °C	----	----

SAR result with Head TSL

SAR averaged over 1 cm^3 (1 g) of Head TSL	Condition	
SAR measured	250 mW input power	2.41 mW / g
SAR normalized	normalized to 1W	9.64 mW / g
SAR for nominal Head TSL parameters	normalized to 1W	**9.71 mW /g ± 17.0 % (k=2)**

SAR averaged over 10 cm^3 (10 g) of Head TSL	condition	
SAR measured	250 mW input power	1.57 mW / g
SAR normalized	normalized to 1W	6.28 mW / g
SAR for nominal Head TSL parameters	normalized to 1W	**6.31 mW /g ± 16.5 % (k=2)**

Body TSL parameters

The following parameters and calculations were applied.

	Temperature	Permittivity	Conductivity
Nominal Body TSL parameters	22.0 °C	55.2	0.97 mho/m
Measured Body TSL parameters	(22.0 ± 0.2) °C	54.6 ± 6 %	0.98 mho/m ± 6 %
Body TSL temperature during test	(22.0 ± 0.2) °C	----	----

SAR result with Body TSL

SAR averaged over 1 cm^3 (1 g) of Body TSL	Condition	
SAR measured	250 mW input power	2.50 mW / g
SAR normalized	normalized to 1W	10.0 mW / g
SAR for nominal Body TSL parameters	normalized to 1W	**9.90 mW / g ± 17.0 % (k=2)**

SAR averaged over 10 cm^3 (10 g) of Body TSL	condition	
SAR measured	250 mW input power	1.64 mW / g
SAR normalized	normalized to 1W	6.56 mW / g
SAR for nominal Body TSL parameters	normalized to 1W	**6.51 mW / g ± 16.5 % (k=2)**

Appendix

Antenna Parameters with Head TSL

Impedance, transformed to feed point	51.4 Ω - 2.4 jΩ
Return Loss	- 31.3 dB

Antenna Parameters with Body TSL

Impedance, transformed to feed point	47.1 Ω - 4.7 jΩ
Return Loss	- 24.9 dB

General Antenna Parameters and Design

Electrical Delay (one direction)	1.390 ns

After long term use with 100W radiated power, only a slight warming of the dipole near the feedpoint can be measured.

The dipole is made of standard semirigid coaxial cable. The center conductor of the feeding line is directly connected to the second arm of the dipole. The antenna is therefore short-circuited for DC-signals.
No excessive force must be applied to the dipole arms, because they might bend or the soldered connections near the feedpoint may be damaged.

Additional EUT Data

Manufactured by	SPEAG
Manufactured on	September 20, 2005

DASY5 Validation Report for Head TSL

Date/Time: 11.01.2010 15:20:07

Test Laboratory: SPEAG, Zurich, Switzerland

DUT: Dipole 835 MHz; Type: D835V2; Serial: D835V2 - SN:4d039

Communication System: CW; Frequency: 835 MHz; Duty Cycle: 1:1
Medium: HSL900
Medium parameters used: f = 835 MHz; σ = 0.89 mho/m; ε_r = 41.2; ρ = 1000 kg/m^3
Phantom section: Flat Section
Measurement Standard: DASY5 (IEEE/IEC/ANSI C63.19-2007)

DASY5 Configuration:

- Probe: ES3DV3 - SN3205; ConvF(6.04, 6.04, 6.04); Calibrated: 26.06.2009
- Sensor-Surface: 3mm (Mechanical Surface Detection)
- Electronics: DAE4 Sn601; Calibrated: 07.03.2009
- Phantom: Flat Phantom 4.9L; Type: QD000P49AA; Serial: 1001
- Measurement SW: DASY5, V5.2 Build 157; SEMCAD X Version 14.0 Build 57

Pin=250 mW /d=15mm, dist=3.0mm (ES-Probe)/Zoom Scan (7x7x7)/Cube 0: Measurement grid: dx=5mm, dy=5mm, dz=5mm
Reference Value = 57.5 V/m; Power Drift = 0.00944 dB
Peak SAR (extrapolated) = 3.61 W/kg
SAR(1 g) = 2.41 mW/g; SAR(10 g) = 1.57 mW/g
Maximum value of SAR (measured) = 2.81 mW/g

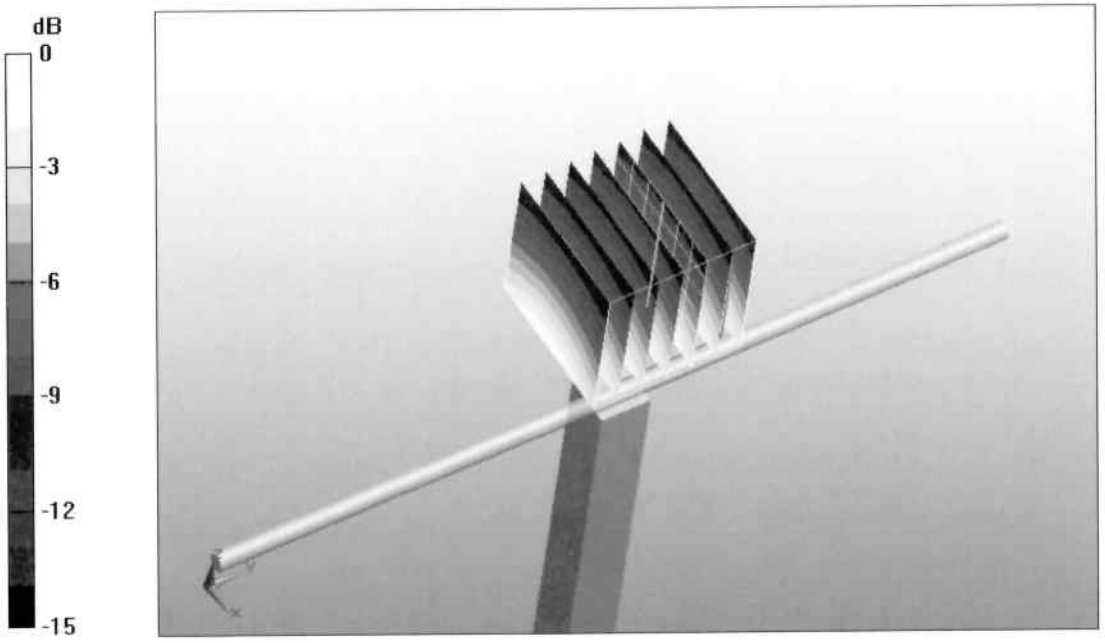

0 dB = 2.81mW/g

Impedance Measurement Plot for Head TSL

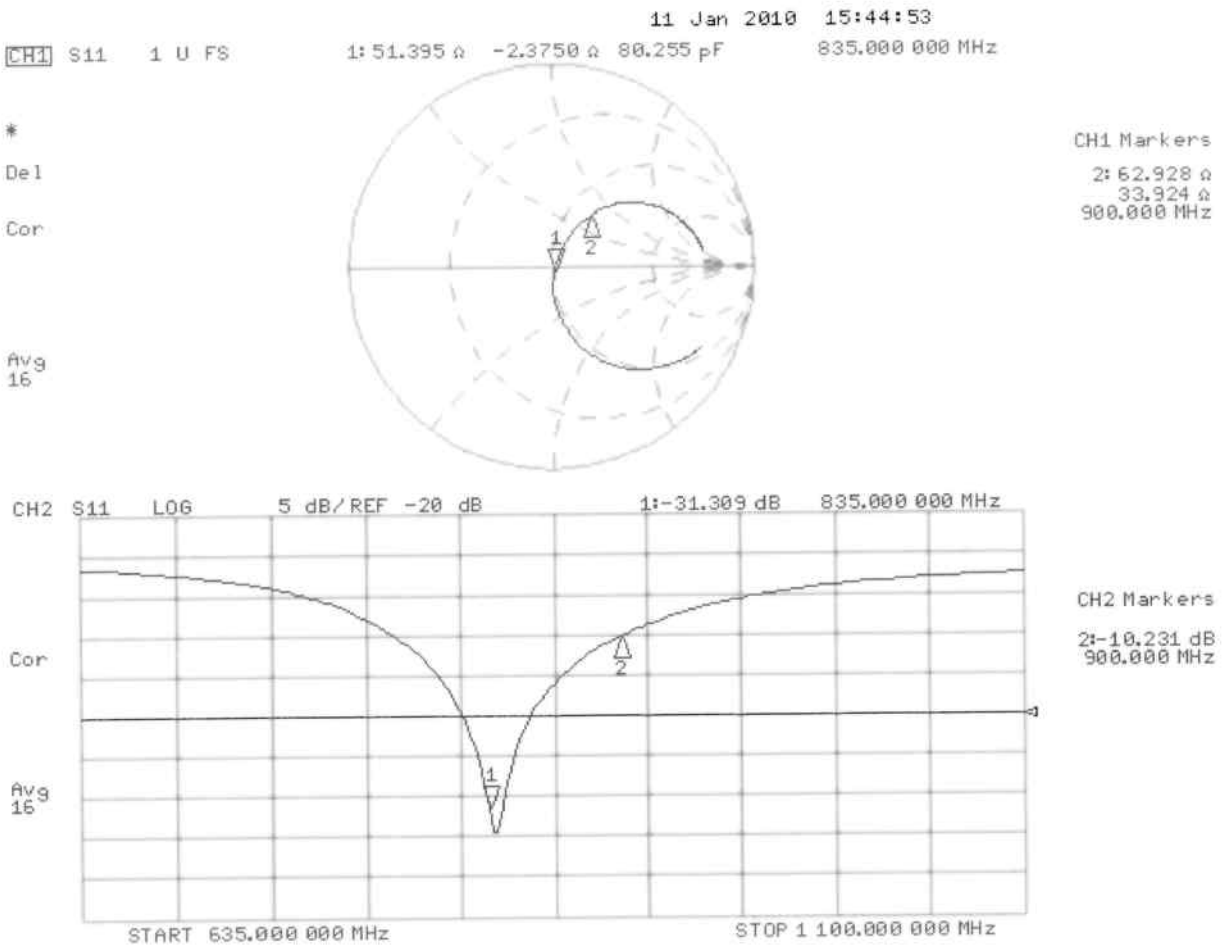

DASY5 Validation Report for Body

Date/Time: 14.01.2010 15:19:23

Test Laboratory: SPEAG, Zurich, Switzerland

DUT: Dipole 835 MHz; Type: D835V2; Serial: D835V2 - SN:4d039

Communication System: CW; Frequency: 835 MHz; Duty Cycle: 1:1
Medium: MSL900
Medium parameters used: f = 835 MHz; σ = 0.98 mho/m; ε_r = 54.6; ρ = 1000 kg/m^3
Phantom section: Flat Section
Measurement Standard: DASY5 (IEEE/IEC/ANSI C63.19-2007)

DASY5 Configuration:

- Probe: ES3DV3 - SN3205; ConvF(5.97, 5.97, 5.97); Calibrated: 26.06.2009
- Sensor-Surface: 3mm (Mechanical Surface Detection)
- Electronics: DAE4 Sn601; Calibrated: 07.03.2009
- Phantom: Flat Phantom 4.9L; Type: QD000P49AA; Serial: 1001
- Measurement SW: DASY5, V5.2 Build 157; SEMCAD X Version 14.0 Build 57

Pin250 mW /d=15mm, dist=3.0mm (ES-Probe) 2 2/Zoom Scan (7x7x7)/Cube 0: Measurement grid: dx=5mm, dy=5mm, dz=5mm
Reference Value = 55.3 V/m; Power Drift = 0.024 dB
Peak SAR (extrapolated) = 3.69 W/kg
SAR(1 g) = 2.5 mW/g; SAR(10 g) = 1.64 mW/g
Maximum value of SAR (measured) = 2.93 mW/g

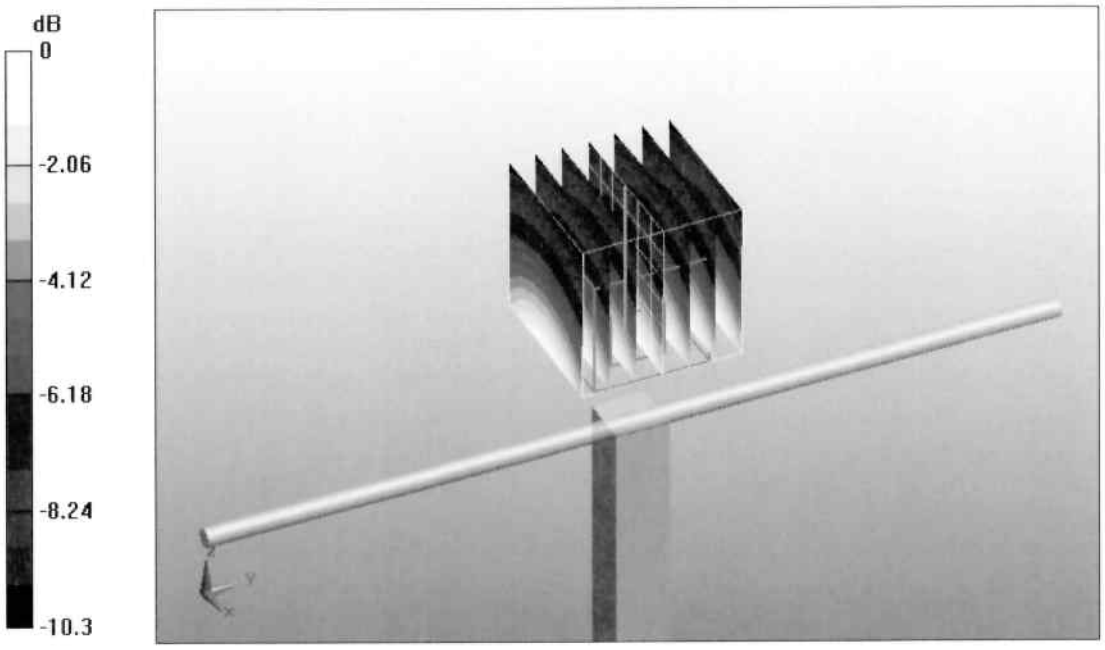

0 dB = 2.93mW/g

Impedance Measurement Plot for Body TSL

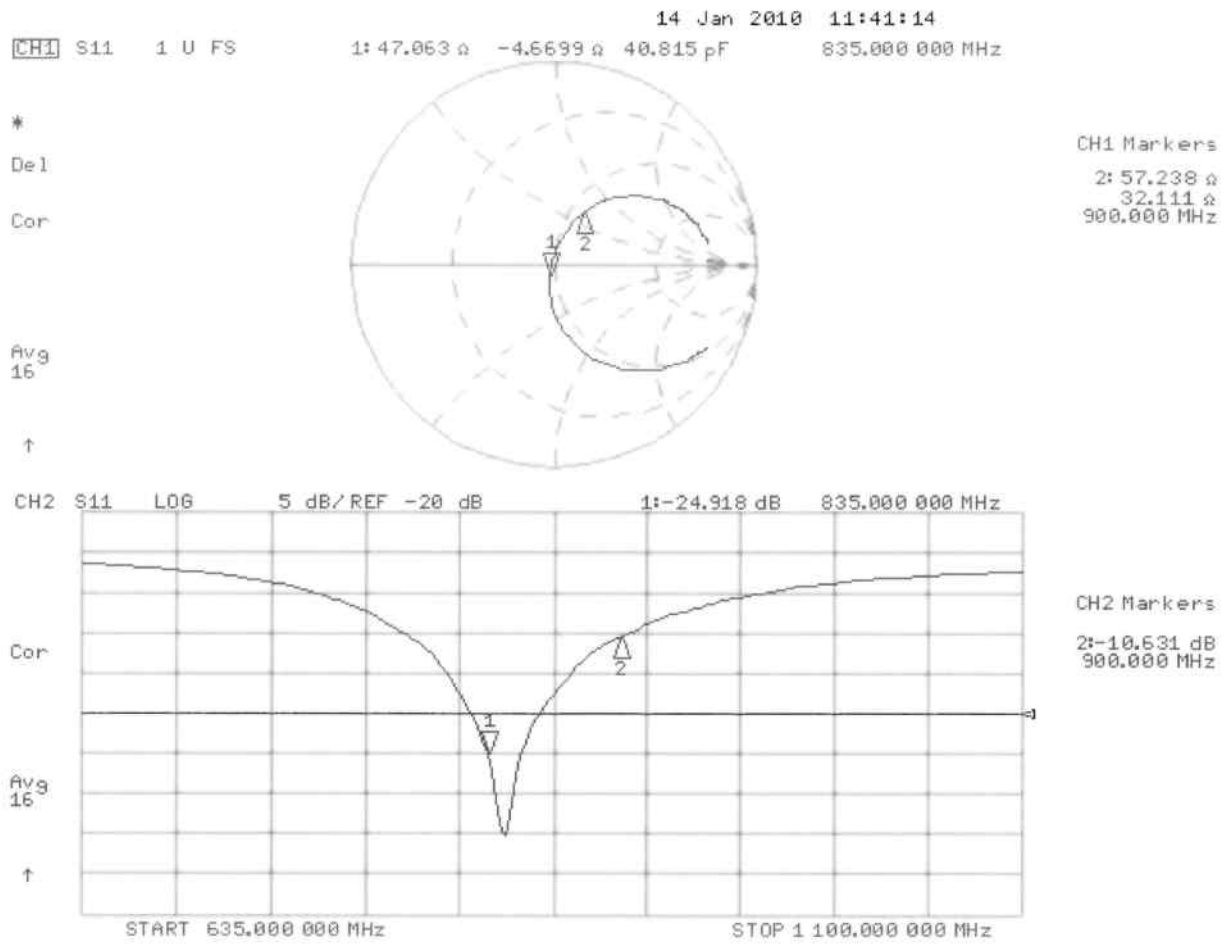

Sony Ericsson

Company Internal
INSTRUCTION

Prepared (also subject responsible if other)		No.		
LD/SEMC/BGUG/NM Ramadan Plicanic		GUG/N 03:141		
Approved	Checked	Date	Rev	Reference
LD/SEMC/BGUG/NMC Mats Hansson		060220	E	File

Sony Ericsson SAR Measurement Specification of Wireless Terminals

Contents

1 Introduction and scope 2
2 References 2
3 Physical quantities, units and constants 4
4 Definitions 4
5 Measurement system specifications 4
5.1 General 4
5.2 Phantom 5
5.3 SAR measurement equipment 5
5.4 Scanning system 6
5.5 Wireless device holder 6
5.6 Other equipment 6
6 Protocol for SAR assessment 7
6.1 Measurement preparation 7
6.2 Tests to be performed 7
6.3 Measurement procedure 7
6.4 Post processing 8
7 Measurement uncertainty 9
Annex A Tissue simulating material preparation 9
Annex B Dielectric property measurements 12
Annex C SAR measurement procedure 13
Annex D Measurement system performance check and validation 15
Annex E Uncertainty budgets for 1g and 10g SAR assessments with DASY 17

Note: Any hard copy of this document is for reference only. Due to template and application dependecies the header and footer may fail to display correct data. It is the responsibility of the user to ensure that they have a corect and valid version. Any outdated hard copy is invalid and must be removed from possible use.

1. Introduction and scope

It is a Sony Ericsson policy that all RF transmitting product models shall comply with relevant recommendations, standards and regulations on human exposure to electromagnetic fields. In the reference section below, the most important RF safety guidelines are listed [9-13]. If no national standard or regulation is available in a country, the international recommendation from ICNIRP [9] shall be applied.

The RF safety guidelines specify *basic restrictions* and *reference levels*. In the frequency range of interest for mobile communications, the basic restrictions are expressed as Specific Absorption Rate (SAR) limits and the reference levels as field strength or power density limits. The reference levels are provided for the purpose of simple measurements of compliance with the basic restrictions, and they are primarily applicable in the far-field region of a RF source. Measured values greater than the reference levels do not necessarily mean that the basic restrictions are exceeded.

In the near-field region of mobile communication devices (handsets), field strength values exceeding the reference levels may be observed. Compliance with the basic SAR restrictions has therefore to be verified. SAR (W/kg) is a measure of the rate of RF energy absorption in tissue. The localized SAR limits depend on whether the device is classified for use by the general public (uncontrolled environment) or workers (controlled environment). Mobile communication equipment are usually used by the general public and should consequently be in compliance with the general public limits, which are 2.0 W/kg averaged in 10 gram of tissue in the ICNIRP guidelines [9] and 1.6 W/kg averaged in 1 gram in the ANSI/IEEE standard [10]. Because of the lower limit and the smaller averaging mass, the ANSI/IEEE limit is slightly more conservative than the ICNIRP limit. The averaging times are also different, 6 minutes in the ICNIRP recommendations and 30 minutes in the IEEE guidelines.

This document describes the SAR measurement procedures used by the SAR testing laboratories of Sony Ericsson. SAR measurement standardization is currently evolving. Many standards and guidelines have recently been released [1, 2 and 5] or are in progress (e.g. [3, 4]). Sony Ericsson is firmly committed to using the latest technology and the latest standards to ensure that the SAR measurements are of the highest quality.

2. References

SAR measurement standards and guidelines

The following standards and guidelines are used as a basis for the SAR measurement specification described herein. Although these documents are well harmonized, some differences exist. References [1] and [2] are approved European standards, [5] is IEEE standard, [3] and [4] draft measurement standards and references [6] are published guidelines. This measurement specification closely conforms to these documents.

[1] European Standard EN 50360, “Product standard to demonstrate the compliance of mobile phones with the basic restrictions related to human exposure to electromagnetic fields (300 MHz – 3 GHz)”, CENELEC, July 2001.

[2] European Standard EN 50361, “Basic standard for the measurement of Specific Absorption Rate related to human exposure to electromagnetic fields from mobile phones (300 MHz – 3 GHz)”, CENELEC, July 2001.

[3] IEC 62209_Part1 (CD), “Procedure to determine the Specific Absorption Rate (SAR) for hand-held mobile wireless devices in the frequency range of 300 MHz to 3 GHz”, IEC, February 2005

[4] IEC 62209 Part 2, “Evaluation of Human Exposure to Radio Frequency Fields from Handheld and Body-Mounted Wireless Communication Devices in the Frequency Range of 30 MHz to 6 GHz: Human models, Instrumentation, and Procedures, Part 2: Procedure to measure the Specific Absorption Rate (SAR) for two-way radios, palmtop terminals, laptop terminals, desktop terminals, and body-mounted devices including accessories and multiple transmitters”, Draft Version 0.6, October 2002

[5] Standard 1528-2003, “Recommended Practice for Determining the Peak Spatial-Average Specific Absorption Rate (SAR) in the Human Body Due to Wireless Communications Devices: Experimental Techniques”, IEEE, June, 2003,

[6] Supplement C (Edition 01-01) to OET Bulletin 65 (Edition 97-01), “Evaluating Compliance with FCC Guidelines for Human Exposure to Radiofrequency Electromagnetic Fields: Additional Information for Evaluating Compliance of Mobile and Portable Devices with FCC Limits for Human Exposure to Radiofrequency Emissions”, FCC, June 2001.

Note: Any hard copy of this document is for reference only. Due to template and application dependecies the header and footer may fail to display correct data. It is the responsibility of the user to ensure that they have a corect and valid version. Any outdated hard copy is invalid and must be removed from possible use.

[7] Radiocommunications (Electromagnetic Radiation Human Exposure) Standard 2003, Australian Communications Authority (ACA), February 2003.

[8] ARIB Standard STD-T56, "Method of Measuring the Specific Absorption Rate from Portable Wireless Terminals", 2nd Edition, Association of Radio Industries and Businesses, January 24th, 2002. (Translation by Asia Technical Translation Pty Ltd 10/04/02).

Other references

[9] ICNIRP, "Guidelines for limiting exposure to time-varying electric, magnetic, and electromagnetic fields (up to 300 GHz)", International Commission on Non-Ionizing Radiation Protection (ICNIRP), Health Physics, vol. 74, pp 494-522, April 1998.

[10] ANSI/IEEE C95.1-1992, "Safety levels with respect to human exposure to radio frequency electromagnetic fields, 3 kHz to 300 GHz", The Institute of Electrical and Electronics Engineers Inc., New York, 1992.

[11] CENELEC ENV 50166-2, "Human exposure to electromagnetic fields: High-frequency (10 kHz – 300 GHz)", European Prestandard, European Committee for Electrotechnical Standardization (CENELEC), January 1995.

[12] MPT, "Radio-radiation protection guidelines for human exposure to electromagnetic fields", Telecommunications Technology Council, Ministry of Posts and Telecommunications, Japan, April 1997.

[13] AS/NZS 2772.1(Int):1998, Interim Australian/New Zealand Standard, "Radiofrequency fields, Part 1: Maximum exposure levels – 3 kHz to 300 GHz", Standards Australia/Standards New Zealand, 1998.

[14] FCC Report and Order, ET Docket 93-62, FCC 96-326, Federal Communications Commission (FCC), August 1996.

[15] Safety code 6, Canadian Standard, Health Canada, 1999.

[16] Thomas Schmid, Oliver Egger, Niels Kuster, "Automated E-field scanning system for dosimetric assessments", *IEEE Transactions on Microwave Theory and Techniques*, vol. 44, pp. 105-113, January 1996.

[17] Schmid & Partner Engineering AG, "DASY3 User Manual", August 1999 Edition, Zurich, Switzerland.

[18] Klaus Meier, Michael Burkhardt, Thomas Schmid and Niels Kuster, "Broadband calibration of E-field probes in lossy media", *IEEE transactions on Microwave Theory and Techniques*, vol. 44, no. 10, pp. 1954-1962, October 1996.

[19] K. Pokovic, T Schmid and N. Kuster, "E-field Probe with Improved Isotropy in Brain Simulating Liquids", *Proceedings ELMAR*, Zadar, Croatia, June 23-25, 1996.

[20] NIS 81, "The treatment of uncertainty in EMC measurements", Technical Report, NAMAS Executive, National Physical Laboratory, Teddington, Middlesex, England, Edition 1, May 1994.

[21] Barry N. Taylor and Christ E. Kuyatt, "Guidelines for evaluating and expressing the uncertainty of NIST measurement results", NIST Technical Report 1297, National Institute of Standards and Technology, September 1994.

[22] T. Schmid and N. Kuster, "Preliminary uncertainty budget for SAR evaluations with DASY3," contribution to IEEE Standards Coordinating Committee 34, Subcommittee 2, July, 1998.

[23] ISO/IEC Guide Expres (1995-01),"Guide to the expression of uncertainty in measurement (1995)", Ed. 1.0 English, 1995.

[24] HP 8752C Network analyzer User's guide. Hewlett Packard part number 08752-90157.

[25] HP 85070D Dielectric probe kit manual, Hewlett Packard part number 85070-90009.

[26] M. Siegbahn, "A SAR test procedure for wireless devices with simultaneous multi-band transmission", EAB/TF-02:118, Rev. A, November 19, 2002

Note: Any hard copy of this document is for reference only. Due to template and application dependecies the header and footer may fail to display correct data. It is the responsibility of the user to ensure that they have a corect and valid version. Any outdated hard copy is invalid and must be removed from possible use.

3. Physical quantities, units and constants

The physical quantities, units and constants given in section 3 of [2] and section 4 of [3] are applicable for this procedure document.

4. Definitions

The definitions given in section 4 of [2], section 3 of [3] and section 2 of [4] apply.

5. Measurement system specifications

Requirements and recommendations are listed in section 5 of [2] and [3] and in sections 3, 4 of 5 of [4].

5.1 General

Requirements and recommendations are listed in section 5.1 of [2] and [3] and in section 5.6.1.1 of [4].

Tests are performed using a miniature electric field probe that is positioned by a robot whose movements are software controlled. The probes are positioned to measure the internal electric field of a liquid-filled phantom representing the human head while the phantom is exposed to electromagnetic energy from a wireless device. The software processes the electric field data to determine the SAR distribution and the highest mass-averaged SAR.

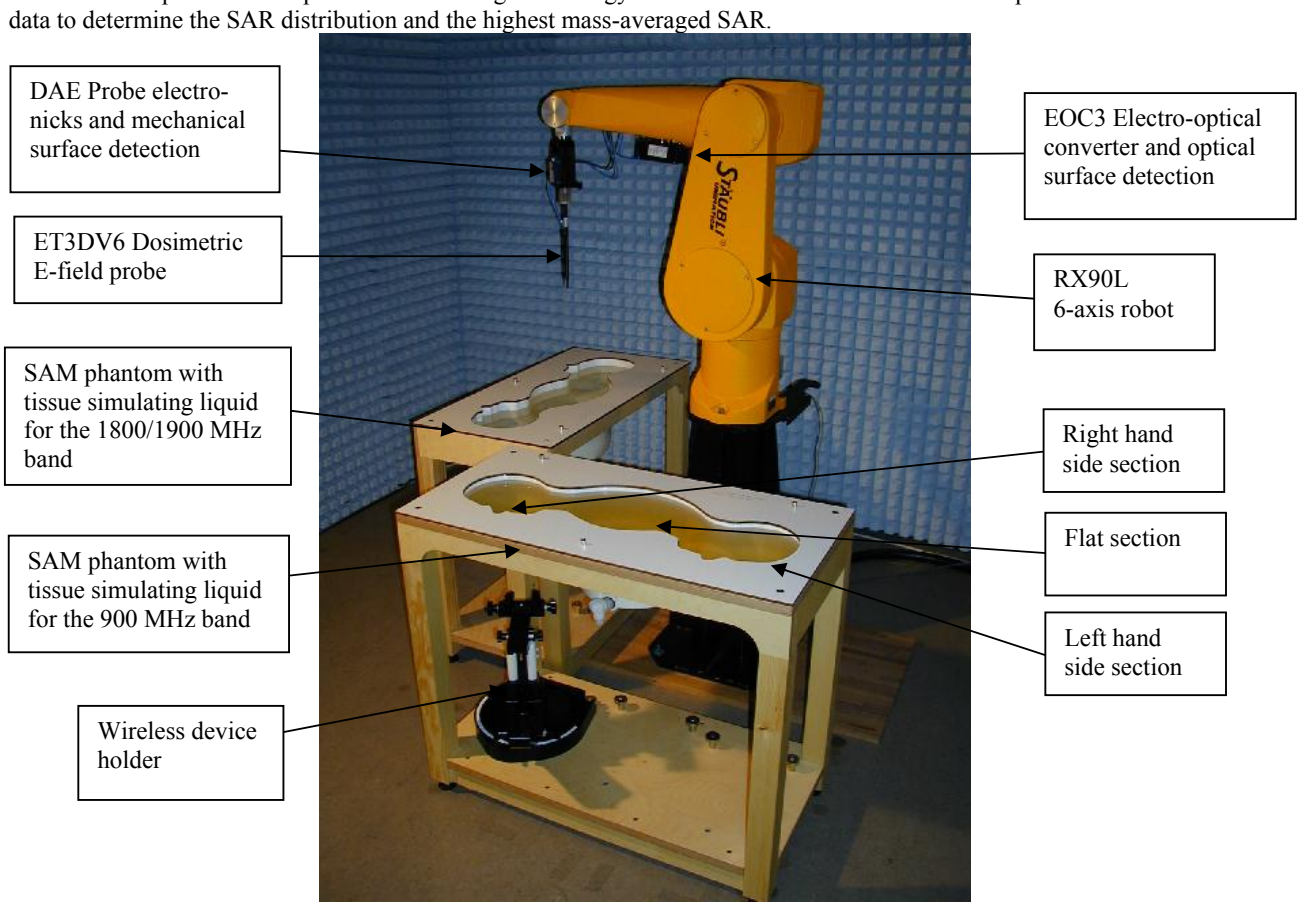

Figure 5.1 SAR measurement system

Note: Any hard copy of this document is for reference only. Due to template and application dependecies the header and footer may fail to display correct data. It is the responsibility of the user to ensure that they have a corect and valid version. Any outdated hard copy is invalid and must be removed from possible use.

The SAR measurement system used in the Sony Ericsson SAR testing laboratories is the DASY near-field scanner manufactured by Schmid & Partner Engineering AG (SPEAG). The system is based on the E-field probe technique and includes a high precision 6-axis robot, liquid-filled plastic phantoms and miniature electric field probes [16, 17]. The specifications of the system are further described below. Figure 5.1 is a picture of the SAR measurement system.

The Ericsson SAR testing laboratories conform to the following environmental conditions:

- Measurements are conducted in a metal screen room, which is designed to provide shielding from external radiofrequency signals and to prevent devices under test from interfering with local wireless networks.
- The ambient temperature is kept in the range 20 – 25°C (this simultaneously satisfies several recommendations and requirements [2-5], which are 15 – 30°C, 18 – 25°C and 20 – 26°C, respectively).
- The relative humidity of the laboratory is kept within 30 – 70% [5].
- During measurements, the temperature of the liquid is kept within ±2 °C of the temperature at which the dielectric parameters were measured [2-4].
- The ambient noise level is kept low so that the 1-gram averaged SAR is below 12 mW/kg when the device under test (DUT) is turned off (this simultaneously satisfies the requirements of [2] and [4]).

5.2 Phantom

Phantom requirements and specifications are provided in section 5.2 of [2] and [3] and in section 4 of [4 and 5].

The phantom used is an implementation of the Specific Anthropomorphic Mannequin (SAM) model [2-5]. It consists of three measurement areas or sections, one section corresponding to right hand side use and an identical but mirrored section for the left-hand side. In the middle of the phantom there is a flat section for tests of mobile phones when worn on the body. The flat section is also used for system validation.

The phantom shell was manufactured by SPEAG to meet stringent shape, thickness and material requirements [2-5]. The length and width of the flat section are at least 0.75 λ_0 and 0.6 λ_0 respectively at frequencies of 824 MHz and above (λ_0 = wavelength in air).

The phantom is filled with a tissue simulating liquid to a depth of at least 15 cm at each ear reference point [2-5]. The dielectric properties of the liquid conform to all the tabulated values [2-5]. Liquids are prepared according to Annex A and dielectric properties are measured according to Annex B.

5.3 SAR measurement equipment

Measurement equipment requirements and specifications are provided in section 5.3 of [2] and [3] and in section 3 of [4 and 5].

The Dosimetric Assessment System (DASY) Professional by Schmid & Partner Engineering AG consists of the dosimetric probe ET3DV6 connected to the readout electronics DAE3 which is attached to the tool joint of a Stäubli RX90L 6-axis high precision robot. The measurement signal is transferred via a fiber optical link from the DAE3 to the electro-optical converter EOC3 that is connected to the ISA type PC card in the system computer.

The dosimetric probe is sensitive to E-fields and incorporates three dipoles arranged so that the overall response is close to isotropic [14, 15]. The probe sensors are covered by an outer protective shell made of plastic, which is resistant to organic solvents i.e. glycol. In the center line of the probe an optical fiber for surface detection is located. The table below summarizes the technical data of this probe. The E-fields probes have been calibrated once per year and after calibration Technical Lead Engineer or Technical Engineer are responsible to change correction factor in DASY system software for each probes. Other probe parameters are provided in the uncertainty budget in Section 7.

The DAE probe electronics incorporates one measurement amplifier for each sensor dipole and a mechanical surface detection system that automatically stops the robot in a probe collision emergency. The fiber optical surface detection system is located

Note: Any hard copy of this document is for reference only. Due to template and application dependecies the header and footer may fail to display correct data. It is the responsibility of the user to ensure that they have a corect and valid version. Any outdated hard copy is invalid and must be removed from possible use.

in the EOC. Either the mechanical or the optical surface detection system is used for controlling the distance between the probe and the inner surface of the phantom shell.

Property	Data
Frequency range	30 MHz – 3 GHz
Linearity	± 0.2 dB
Dynamic Range	5 μW/kg - >100 W/kg
Tip diameter (including protective cover)	6.8 mm
Distance from probe tip to sensors	2.7 mm
Length of sensor dipoles	3 mm
Optical surface detection repeatability	± 0.2 mm

Table 5.1 The technical data for the SAR probe ET3DV6.

Property	Data
Frequency range	10 MHz – 6 GHz
Linearity	± 0.2 dB
Dynamic Range	5 μW/kg - >100 W/kg
Tip diameter (including protective cover)	4 mm
Distance from probe tip to sensors	2 mm
Length of sensor dipoles	2 mm
Optical surface detection repeatability	± 0.2 mm

Table 5.2 The technical data for the SAR probe ES3DV3

The data acquisition electronic have been calibrated once per year and after calibration Technical Lead Engineer or Technical Engineer are responsible to change correction factor in DASY system software for each DAE.. System performance check is conducted for the complete system for each relevant tissue equivalent liquid at the appropriate frequency.

5.4 Scanning system

Requirements and recommendations are listed in section 5.4 of [2] and [3] and in section 5.5 of [4 and 5].

The robotic scanning system works in such a way that the system identifies the measurement areas in the phantom shell by three reference points located on the phantom table and a laser beam on the robot stand which determines the alignment of the probe. The coordinates of the three reference point are entered into the system by manually steering the robotic arm so that the probe tip is above each of these points. Measurement grids can then be defined in each of the available measurement sections of the phantom, the right ear section, the left ear section and in the middle of the shell, the flat section. The robotic arm automatically positions the probe in the selected measurement grid and the distance from the probe tip to the inner surface of the phantom shell is controlled by either a mechanical or an optical surface detection system. The measurement grids are defined so that the whole tested device is covered. During the measurement the local SAR results can be continuously monitored.

5.5 Wireless device holder

Requirements and recommendations are listed in section 5.5 of [2] and [3] and in section 4.1.4 of [4 and 5].

The wireless device holder is a positioning system that allows for very accurate and repeatable device positioning [17]. Tilt and rotation angles have a positioning repeatability better than 1°. Care is taken at the laboratory to ensure that the wireless

Note: Any hard copy of this document is for reference only. Due to template and application dependecies the header and footer may fail to display correct data. It is the responsibility of the user to ensure that they have a corect and valid version. Any outdated hard copy is invalid and must be removed from possible use.

device is placed in the holder in such a way that the holder has a minimal effect on the measured results. Test personnel are trained on proper positioning techniques.

5.6 Other equipment

Requirements and recommendations are listed in section 5.6 of [2] and [3] and in section 5.5 of [4 and 5].

The measurement system also includes dipole antennas for system performance checking and system validation procedures at frequency bands of interest. The dipole antennas conform to the specifications of Annex G of [3] and Annex F of [4]. These dipole antennas are checked yearly according to the following items:

- dipole arms are parallel to a flat surface with a tolerance of 2°.
- return loss at the center frequency is below –20 dB while the dipole is positioned under the flat phantom according to Section 7 of [4].
- current distribution along the dipole is symmetric within 5%, as measured using an H-field probe.
- SAR is measured in a flat phantom and compared with reference SAR values in Table D.1 of [3] or in Table 7.1 of [4 and 5].

SAR measurement system performance check is described in detail in Annex D.

6 Protocol for SAR assessment

Requirements and recommendations are listed in section 6 of [2] and [3] and in section 5 of [4 and 5].

This section presents an overview of the process of assessing SAR for a wireless terminal in Sony Ericsson SAR testing laboratories, the setup of the tested device and the measurement system, which tests are performed and how the test results are processed.

6.1 Measurement preparation

Requirements and recommendations are listed in section 6.1 of [2] and [3] and in section 5.4 and 5.6 of [4 and 5].

Prior to conducting SAR measurements of the DUT, the dielectric properties of the tissue simulating liquid are measured (see Annex B). System performance check (see Annex D) is performed prior to the SAR measurements or when any part of the SAR testing system has been altered, which includes change of probe and calibration of tissue simulating liquid etc.

For SAR compliance measurements, the peak output power level of the mobile phone is set to the maximum power level of that device with a digital radio tester acting as a base station. The peak power level is measured with either a power meter, a sensor suitable for the carrier frequency and the duty cycle, or a digital radio tester.

Tests are conducted for each of the test configurations of the DUT (operational modes, test frequencies, and configurations).

If the device is intended to be used next to the ear, it is positioned next to the SAM head phantom in the “cheek” and “tilt” positions on both the left and right sides of the phantom according to section 5.4 of [4 and 5].

If the device is intended to be used while placed against the body, the phone is tested on the flat section of the phantom. The device, with its original carry case(s) and with hands-free accessories, shall be positioned on the phantom simulating the intended use position, i.e. with the case placed against the phantom shell. Alternatively, the device can be placed against the phantom using a spacer that separates the device from the phantom by the minimum distance allowable using all carry cases. Additional guidance given in [5] on conducting body-worn measurements should be followed.

Note: Any hard copy of this document is for reference only. Due to template and application dependecies the header and footer may fail to display correct data. It is the responsibility of the user to ensure that they have a corect and valid version. Any outdated hard copy is invalid and must be removed from possible use.

6.2 Tests to be performed

Requirements and recommendations are listed in section 6.2 of [2] and [3] and in section 5.6 of [4 and 5].
A wireless handset can have many test conditions (operational modes, test frequencies, configurations and test positions against the phantom). At a minimum, the steps outlined in the above listed sections are followed to determine the maximum spatial-averaged SAR of the device.

6.3 Measurement procedure

Requirements and recommendations are listed in section 6.3 of [2] and [3] and in section 5.6 of [4 and 5].
The measurement procedure is described in detail in Annex C. The measurement procedure can be summarized in the following steps:

1. Setup of DASY: liquid parameters, test device properties, probe, DAE and measurement areas are specified in the system configuration setting.

2. Setup of the device: positioning on the phantom, output power level and test channel are selected and checked.
3. SAR measurement, the following measurement jobs are conducted:
   - Reference measurement where the robot moves the probe to a fixed reference position in the tissue liquid and the E-field is recorded.
   - Coarse SAR scan with grid covering the whole device for finding maximum.
   - Fine cubical SAR scan around maximum for obtaining mass averaged SAR.
   - Second reference measurement for checking device output power drift. Repeat the SAR measurement if the drift is higher than ±5% (±0.21dB).
   - Surface checks (optional) where the robot repeatedly moves the probe to the phantom surface at a specified point to check the repeatability of the mechanical and optical surface detection are conducted before the reference measurements if needed. If the repeatability is greater than ±0.1 mm, the system should be inspected (e.g. check for air bubbles trapped under the probe) and the surface check procedure should be repeated.

6.4 Post processing

Requirements and recommendations are listed in section 6.4 of [2] and [3] and in section 5.5 of [4 and 5].
The specific absorption rate (SAR) is calculated from the recorded E-fields by the following expression:

$$SAR = \sigma \frac{E^2}{\rho}$$

where σ is the measured electric conductivity (S/m) of the liquid, *E* is the measured root-mean-squared E field (V/m), and ρ is the chosen tissue density (ρ = 1000 kg/m^3 = 1 g/cm^3 should always be used [2,4 and 5]). The SAR distribution of the tested device is determined by a coarse scan where the probe is moved in a coarse grid following the inner surface of the phantom. The size of the scanned region should be large enough to guarantee that all possible SAR peaks are included. The distance between adjacent measured points should be 10 – 20 mm [2-5]. Spline interpolation is then used to determine the point of maximum SAR.
The mass averaged SAR is determined by a fine cubical scan, a measurement taken on a fine grid around the position of the maximum SAR. The grid typically consists of 5x5x7 points with 8 mm between the individual points [2] and thus contains about 27 grams of tissue. Numerical extrapolation is then used to determine the SAR values between measurement points in the cube and in the small region between the cube and the inner surface of the phantom where the E-field sensors cannot be positioned. The extrapolation distance is the sum of the probe tip - sensor offset, the surface detection distance and the grid offset. The extrapolation is based on fourth-order polynomial functions. Next, a 3D-spline interpolation algorithm is used to interpolate the measured data to a 1g cube (20x20x20=8000 points) over which the SAR is averaged. The cube is shifted throughout the fine scan area until the highest averaged SAR is found. The same procedure is repeated for the 10 gram cube

Note: Any hard copy of this document is for reference only. Due to template and application dependecies the header and footer may fail to display correct data. It is the responsibility of the user to ensure that they have a corect and valid version. Any outdated hard copy is invalid and must be removed from possible use.

(also 20x20x20=8000 points). If the 1g and 10g maximum SAR is found when the averaging cube is touching any side of the measurement grid a message "Maximum outside" is given and a second fine scan has to be conducted. This in order to assess the absolute maximum mass averaged SAR.

7 Measurement uncertainty

Requirements and recommendations are listed in section 7 of [2] and [3] and in sections 3 and 4 of [4 and 5].
The measurement uncertainty of the DASY has been determined according to the NIS81 [18] and NIST1297 documents [19]. The total uncertainty of the SAR assessment is composed of two main factors: measurement uncertainty and source uncertainty. Each of these uncertainties consists of a number of individual factors. A detailed breakdown of uncertainties, according to T. Schmid *et. al.* [20], is provided in Annex E. The combined uncertainty (k=1) of the 1g SAR assessment is ± 13.6% and for 10g SAR assessments ± 13.3%. The extended uncertainties (k=2) is ± 27.1% and ± 26.6% for 1g and 10g assessments, respectively [21].

Note: Any hard copy of this document is for reference only. Due to template and application dependecies the header and footer may fail to display correct data. It is the responsibility of the user to ensure that they have a corect and valid version. Any outdated hard copy is invalid and must be removed from possible use.

Annex A Tissue simulating material preparation

This section describes the preparation procedure for the tissue simulating liquids used in SAR testing.

A.1 Liquid parameters

The liquids prepared for the SAR testing meet both the requirements of [2] in table 1 and the requirements of [3] and [4 and 5] in table 2. The parameters below are applicable to average head tissue simulating material. Since dielectric parameters for average body tissue have not yet been developed, liquids meeting the below stated data are also used for measurements of body SAR. The parameters for a liquid used in SAR measurements has to be within ±5% of the target values.

Frequency (MHz)	ε_r	σ (S/m)
300	45	0.85
450	44	0.88
900	42	0.99
1450	41	1.20
1800	40	1.38
2450	39	1.84
3000	39	2.40

Table A.1. The dielectric properties of tissue simulating material given in [2].

Frequency (MHz)	ε_r	σ (S/m)
300	45.3	0.87
450	43.5	0.87
835	41.5	0.90
900	41.5	0.97
1450	40.5	1.20
1800	40.0	1.40
1900	40.0	1.40
2000	40.0	1.40
2450	39.2	1.80
3000	38.5	2.40

Table A.2. The dielectric properties of tissue simulating material given in [3], [5] and [6].

A.2 Liquid recipes

Ingredients

Water	distilled water
Sugar	as available in food shops
Salt	as available in food shops (Note, no iodine!)
Cellulose	HEC Hydroxyethyl-cellulose (Optional ingredient)
Preservative	Preventol D7 Bayer AG or Sodium Nitrate
DGBE	Diethyleneglycolbutyl ether (CAS No. 112-34-5)

Note 1: It is important to follow the instructions provided in the Material Safety Data Sheet (MSDS) for any material, or any local regulations. It is also important to have material handling procedures (including procedures for handling, storage and disposal).

Note: Any hard copy of this document is for reference only. Due to template and application dependecies the header and footer may fail to display correct data. It is the responsibility of the user to ensure that they have a corect and valid version. Any outdated hard copy is invalid and must be removed from possible use.

Note 2: Similar materials can also be substituted for the ones above (e.g. deionized water instead of distilled water). The specifications of the materials (e.g. purity) are not critical (although they may change the recipes below), because the after the tissue simulating liquid is made, its dielectric parameters must be verified to be within the target ranges.

Preparation equipment

- Balance (range: 0-6000 g, accuracy: ± 0.1g)
- Stirrer with hotplate
- Jars and beakers
- Mixing spoon

Liquids for the 835 MHz and 900 MHz

	835 MHz and 900 MHz head	
Ingredient	**weight (%)**	**weight (g)**
Distilled water	40.29	532.63
HEC	0.24	3.20
NaCl	1.40	18.29
Preservative	0.18	2.4
Sugar	57.90	765.49
Total amount		**1322.00**
Goal		
Frequency (MHz)	835	900
Relative Permittivity	41.5	41.5
Conductivity	0.90	0.97

	835 MHz and 900 MHz body	
Ingredient	**weight (%)**	**weight (g)**
Distilled water	50.75	633.91
HEC	-	0.00
NaCl	0.94	11.76
Preservative	0.10	1.2
Sugar	48.21	602.12
Total amount		**1249.00**
Goal		
Frequency (MHz)	835	900
Relative Permittivity	55.2	55.0
Conductivity	0.97	1.05

Liquids for the 1800 MHz and 1900 MHz

	1800 MHz and 1900 MHz head	
Ingredient	**weight (%)**	**weight (g)**

Note: Any hard copy of this document is for reference only. Due to template and application dependecies the header and footer may fail to display correct data. It is the responsibility of the user to ensure that they have a corect and valid version. Any outdated hard copy is invalid and must be removed from possible use.

Distilled water	55.24	552.42
DGBE	44.45	444.52
NaCl (Salt)	0.31	3.06
Total amount		**1000.00**
Goal		
Frequency (MHz)	1800	1900
Relative Permittivity	40.0	40.0
Conductivity	1.40	1.40

	1800 MHz and 1900 MHz body	
Ingredient	**weight (%)**	**weight (g)**
Distilled water	70.17	701.66
DGBE	29.44	294.42
NaCl (Salt)	0.39	3.92
Total amount		**1000.00**
Goal		
Frequency (MHz)	1800	1900
Relative Permittivity	53.3	53..3
Conductivity	1.52	1.52

Liquids for the 2450 MHz

	2450 MHz head	
Ingredient	**weight (%)**	**weight (g)**
Distilled water	55.0	550.00
DGBE	45.0	450.00
Total amount		**1000.00**
Goal		
Frequency (MHz)	2450	
Relative Permittivity	39.2	
Conductivity	1.80	

	2450 MHz body	
Ingredient	**weight (%)**	**weight (g)**
Distilled water	68.64	686.64
DGBE	31.37	313.65
Total amount		**1000.00**
Goal		
Frequency (MHz)	2450	
Relative Permittivity	52.7	
Conductivity	1.95	

A.2 Preparation procedure

Sugar-based liquids

Add the water to a large container. Begin heating and stirring.

Add the cellulose, preservative and salt (if required). While keeping the container covered, leave the solution on the heating plate until the mixture becomes sufficiently transparent and homogeneous. The temperature of the mixture should be hot enough to aid in mixing the ingredients but cool enough to prevent a significant amount of water evaporation.

Add the sugar. Hand stirring may be necessary at the beginning until the sugar is sufficiently dissolved.

Note: Any hard copy of this document is for reference only. Due to template and application dependecies the header and footer may fail to display correct data. It is the responsibility of the user to ensure that they have a corect and valid version. Any outdated hard copy is invalid and must be removed from possible use.

Keep the liquid hot and the container covered until the solids are dissolved and the liquid is homogenous.

Turn the hotplate off and allow the liquid to cool off to room temperature prior to performing dielectric measurements.

Alcohol-based liquids

1. Add all the ingredients in a large container.
2. Stir until the liquids are solved.

A.3 Tissue liquid maintenance

In order to keep the dielectric parameters of the tissue simulating liquids within their target ranges, ingredients may be added to adjust the parameters. For example, one can add water to increase the permittivity, sugar to reduce the permittivity or salt to increase the conductivity. Parameters should each be within a ±5% range of target values.

A batch of tissue simulating liquid may last several months or more but regular maintenance is necessary in order to keep the dielectric properties within target ranges. The electrical parameters of the tissue simulating liquids are assessed prior to SAR compliance testing and checked that they are within tolerance of the specified values (see tables above). The parameters are subject to small variations due to evaporation, and ingredients have to be added on a regular basis in order to adjust the parameters. The amount of ingredient to add depends on the parameter deviations and the total liquid volume and is therefore not easily calculated. However, based on experience, for sugar-salt-water liquids a rule of thumb can be applied: to a 25-liter liquid with a permittivity deviation of about -7% and a conductivity deviation around -3% to -7%, 200 – 400 grams of water should be added. It is recommended that a batch be disposed of and replaced with a new batch when it becomes difficult to keep its dielectric parameters within the ranges specified.

Note: Any hard copy of this document is for reference only. Due to template and application dependecies the header and footer may fail to display correct data. It is the responsibility of the user to ensure that they have a corect and valid version. Any outdated hard copy is invalid and must be removed from possible use.

Annex B: Dielectric property measurements

This annex describes the procedures used to measure the dielectric properties of the tissue simulating liquid.

B.1 Equipment

- HP network analyzer, models in the HP8753 series, HP8752C or similar
- HP dielectric probe kit HP85070 of versions A, B, C or D [25]
- HP 85070 software (any software version)
- PC using GPIB card [24] for communication with network analyzer
- Syringe
- Small glass jars for liquid samples
- Thermometer

B.2 Procedure for testing tissue simulating liquid

1. Turn the NWA (Network analyzer) on and allow it to warm up.
2. Start the PC and run the HP 85070 software.
3. Mount dielectric probe kit so that interconnecting cable to NWA will not be moved during measurement or calibration.
4. Perform calibration according to the HP85070 manual [25]. In short the following steps are covered:
    - Inspect the probe and ensure that it is properly cleaned.
    - Pour distilled water in a sample container and measure the water temperature.
    - Set start and stop frequency, frequency step and water temperature.
    - Perform calibration measurement with probe in air, connected to short circuiting block and in distilled water. Assure proper contact which requires attaching the block firmly. Monitor the polar chart on the network analyzer to assure good contact as explained in the manual.
5. Assure that the probe is thoroughly cleaned before performing the measurement.
6. Inspect the liquid for in homogeneities. Surface bubbles can be moved to one side, but if there are numerous bubbles throughout the liquid (e.g. as happens after a new liquid has been poured into a phantom), wait until the bubbles have floated to the surface before proceeding. Also remove any debris or lumps in the liquid.
7. Stir the liquid to be measured.
8. Measure the temperature of the tissue simulating liquid in the phantom. Save value for reference, SAR measurements are only conducted for temperatures $\pm 2^{o}$C from this reference temperature.
9. Extract a sample (approximately 50 ml or more).
10. Measure liquid shortly after calibration of the network analyzer and at most within an hour of this calibration. It is also important to measure the liquid sample soon after extracting it so that evaporation and temperature variation do not affect the results.
11. Immerse the dielectric probe in the liquid sample. Check that there are no air bubbles in front of the opening in the dielectric probe kit.
12. Perform measurements. Repeat measurement five times to increase reliability and use average value for comparison with target value. If a single measurement deviates substantially from the rest then redo that measurement to reject possible artifact. The accuracy specified by the dielectric probe kit manufacturer [23] is ±5% for the dielectric constant ε' and ±0.05 for the loss tangent ε''/ε'.
13. Conductivity σ can be calculated from ε'' according to
$$\sigma = \omega\varepsilon_{o}\varepsilon'' \cong \varepsilon'' \text{ f (GHz)/18.}$$
14. Clean the probe thoroughly after use.
15. Pour the sample back into the phantom.

Note: Any hard copy of this document is for reference only. Due to template and application dependecies the header and footer may fail to display correct data. It is the responsibility of the user to ensure that they have a corect and valid version. Any outdated hard copy is invalid and must be removed from possible use.

Annex C: SAR measurement procedure

This section gives a step-by-step procedure for measuring the DUT. The instructions of this section are only valid under the assumption that the measurement equipment is calibrated. More information is found in the user manual for the measurement system [13].

C.1 Initial setup

1. Ensure that the computer, robot controller and DAE are turned on, and that the DASY software is running.
2. Press the robot button on the toolbar to set up the communications between the software and the robot. Go through the self-check procedure in the software to ensure that the system is properly running and set up for measurement.
3. Choose the appropriate test configuration in the "Setup" menu. NOTE, check that the medium parameters in the "options" window are equal to those measured previously with the dielectric probe kit for the liquid in the phantom.
5. Remove the plastic cover on the phantom.
6. Verify that the system knows the reference points on the phantom. Check the distance between the reference points and the probe tip with the plastic spacer. If it does not accurately locate one or more of the points, install the reference points. Should the installation fail to give results within the tolerances set out in the factory settings for the phantom, the procedure will give an error and the user will have to reinstall the reference points. Afterwards, move the probe to the resting point above the flat section.
7. Stir the liquid in the phantom to ensure that it is homogeneous. Surface bubbles can be moved to one side, but if there are numerous bubbles throughout the liquid (e.g. as happens after a new liquid has been poured into a phantom), wait until the bubbles have floated to the surface before proceeding. Also remove any debris or lumps in the liquid.
8. Measure the temperature of the tissue simulating liquid in the phantom. The liquid temperature has to be within ±2 °C of the temperature recorded when the electrical parameters were measured.

C.2 Measurement procedure

The following steps should be carried out for each of the test conditions described in Section 6.2.

1. Open the appropriate predefined measurement file or prepare a new measurement file by selecting jobs from the menu. The measurement file contains the following jobs: reference measurement, drift measurement, coarse scan covering the whole device, two cubical fine scans and a final drift measurement. The recording time for the coarse and fine scans is 1 second, which gives sufficient accuracy, but for reference/drift measurements 4 seconds giving increased noise-reduction. Additionally, a surface check can be inserted before the reference/drift measurements. During this check, the robot repeatedly moves the probe to the phantom surface at a specified point to check the repeatability of the mechanical and optical surface detection. If the repeatability is worse than ±0.1 mm, the system should be inspected (e.g. check for air bubbles trapped under the probe) and the surface check procedure should be repeated. Save the measurement file under an appropriate name.
2. Move the probe so that the tip is below the surface of the liquid in the selected measurement section. Stir the liquid again to remove any bubbles trapped under the probe tip.
3. Power on the DUT and set it to transmit at full power in one of the operational configurations (as described in Section 6.1). Check the signal with the spectrum analyzer.
4. Position the DUT against the phantom in one of the required test positions (as described in Section 6.1).
5. Select and start the first five measurement jobs; reference measurement, 3-minute time sweep, drift measurement, the coarse and one fine scan). Note the time sweep can be omitted once the device has warmed up.

Note: Any hard copy of this document is for reference only. Due to template and application dependecies the header and footer may fail to display correct data. It is the responsibility of the user to ensure that they have a corect and valid version. Any outdated hard copy is invalid and must be removed from possible use.

6. Check the measured fine scan when the measurement jobs have been completed. If the maximum SAR has been found within the measured grid (no system message "Maximum outside") delete the second fine scan in the file and proceed with the final drift measurement. Otherwise, measure both the second fine scan and the drift measurement. Additionally, check for local maxima of at least 50% of maximum SAR.

7. Check the system drift. If the measurement data is not within ±5% (±0.21 dB), check the DUT and change battery if necessary, check the DASY and repeat the measurement. If the drift cannot be maintained within 5%, add the drift to the measured SAR value.

8. Save the measurement data and enter it into the laboratory log.

C.3 Post measurement procedure

When the SAR measurements are finished, do the following:

1. Power off the DUT.
2. Move the probe to the resting point and clean it with water.
3. Put the plastic cover on the phantom.

Note: Any hard copy of this document is for reference only. Due to template and application dependecies the header and footer may fail to display correct data. It is the responsibility of the user to ensure that they have a corect and valid version. Any outdated hard copy is invalid and must be removed from possible use.

Annex D: Measurement system performance check and validation

D.1 General

Measurement system validation consists of three procedures:

1. System performance checking
2. System validation
3. Inter laboratory comparison

These three procedures are defined in section 7 of [4 and 5]. System performance checking and inter laboratory comparison are also described in Annex D of [2] (they are called Simplified performance checking and system validation, respectively) and in Annex D of [3].

System performance checking is conducted prior to the SAR testing of a wireless device with a reference dipole antenna and the flat section of the SAM phantom. The results are compared to reference data provided by the system manufacturer, Schmid & Partner Engineering AG. The DASY3 manufacturer conducts system validation. Inter laboratory comparison between the Ericsson SAR testing laboratories is conducted according to a separate procedure.

D.2 System performance check procedure

System performance check is conducted according to the following steps.

Setup of the dipole antenna

1. Turn on the signal generator, power meter and power amplifier (if used). Allow them sufficient time to warm up, to reduce drift.
2. Position the dipole antenna under the flat phantom and adjust the height of the stand until the specified spacer is touching the shell of the flat phantom. The center of the dipole antenna should be positioned under the middle of the flat phantom, as indicated by a mark on the flat phantom.
3. Connect one end of the coax line to the power meter sensor and the other end to the output of the signal generator. If the power amplifier is used, connect it between the signal generator and the power meter sensor.
4. Set the signal generator to transmit in CW mode and ensure that any signal modulation is turned off. This ensures that the power amplifier will transmit a pure sinusoid.
5. Set the frequency of the signal generator to the resonant frequency of the dipole antenna.
6. Set the output power of the signal generator (and optionally adjust the gain of the power amplifier) so that the same amount of power as used by the system manufacturer at calibration is delivered to the power meter.
7. Disconnect the coax line from the power meter and connect it to the dipole antenna.

Setup of the DASY

1. Mount the 3D electric field probe, as shown in the SPEAG manual.
2. Remove the plastic cover on the phantom.
3. Power up the DAE. The LED indicates that the power is on.
4. Power up the computer.
5. Turn on the robot controller
6. Start the DASY software on the computer.

Note: Any hard copy of this document is for reference only. Due to template and application dependecies the header and footer may fail to display correct data. It is the responsibility of the user to ensure that they have a corect and valid version. Any outdated hard copy is invalid and must be removed from possible use.

7. Choose the appropriate measurement configuration in the "Setup" menu of the software for the dipole measurement. Record the dielectric constant and conductivity of the liquid in the program.

8. Press the robot button on the toolbar to set up the communications between the software and the robot. Go through the self-check procedure in the software to ensure that the system is properly running and set up for measurement.

9. Verify that the robot knows the reference points on the phantom. Check the distance between the reference points and the probe tip with the plastic spacer. If it does not accurately locate one or more of the reference points to within ±5 mm, install the reference points. Should the installation fail to give results within the tolerances set out in the factory settings for the phantom, the procedure will give an error and the user will have to reinstall the reference points. Afterward, move the probe to the resting point above the flat section.

10. Measure the temperature of the tissue simulating liquid in the phantom. The liquid temperature has to be within ±2 °C of the temperature recorded when the electrical parameters were measured.

Measurement procedure

1. Open a measurement file. Select the predefined dipole test provided by SPEAG. This file includes all of the necessary measurements for the dipole test. Rename the file with an appropriate name and save it in the appropriate directory.

2. Tell the robot to move the probe tip below the surface of the liquid. Stir the liquid again to remove any bubbles trapped under the probe tip.

3. Select and start the measurement jobs in the file. These include the reference check, coarse scan, fine scan, and drift measurements.

Analysis of measured data

1. Normalize the measurement data to 1 Watt and compare the one-gram and ten-gram averaged peak SAR values to the standard values provided in the reference documents. If they do not agree within ±10%, check the system parameters (e.g. antenna output power, dielectric parameters of the tissue simulating liquid, homogeneity of the liquid) and repeat the measurement.

2. Also check that the distribution of measured SAR agrees with that provided in the reference data. The peak SAR should be located over the center of the dipole, and the SAR should monotonically decrease away from this point. If the SAR distribution does not compare well with the reference data, repeat the measurement.

3. Make sure that the drift measurement is within ±5% (±0.2 dB). If not, check the system parameters and repeat the measurement.

4. Save the measurement data and enter it into the logbook.

5. Move the probe out of the liquid and clean it with warm water.

Note: Any hard copy of this document is for reference only. Due to template and application dependecies the header and footer may fail to display correct data. It is the responsibility of the user to ensure that they have a corect and valid version. Any outdated hard copy is invalid and must be removed from possible use.

Annex E Uncertainty budgets for 1g and 10g SAR assessments with DASY

E.1 Uncertainty budget for measurements of 1g mass averaged SAR

Error description	Uncertainty (%)	Distrib.	Divisor	c_i 1g	Standard unc 1g (%)	v_i^2 or v_{eff}
Measurement system						
Probe calibration	± 4.4	Normal	1	1	± 4.4	∞
Axial isotropy	± 4.7	Rectang.	√3	$(1-c_p)^{1/2}$	± 1.9	∞
Spherical isotropy	± 9.6	Rectang.	√3	$(c_p)^{1/2}$	± 3.9	∞
Spatial resolution	± 0.0	Rectang.	√3	1	± 0.0	∞
Boundary effects	± 5.5	Rectang.	√3	1	± 3.2	∞
Probe linearity	± 4.7	Rectang.	√3	1	± 2.7	∞
Detection limit	± 1.0	Rectang.	√3	1	± 0.6	∞
Readout electronics	± 1.0	Normal	1	1	± 1.0	∞
Response time	± 0.8	Rectang.	√3	1	± 0.5	∞
Integration time	± 1.4	Rectang.	√3	1	± 0.8	∞
RF ambient conditions	± 3.0	Rectang.	√3	1	± 1.7	∞
Mech. Constraints of robot	± 0.4	Rectang.	√3	1	± 0.2	∞
Probe positioning	± 2.9	Rectang.	√3	1	± 1.7	∞
Extrap. and integration	± 3.9	Rectang.	√3	1	± 2.3	∞
Test sample related						
Device positioning	± 6.0	Normal	0.89	1	± 6.7	12
Device holder uncertainty	± 5.0	Normal	0.84	1	± 5.9	8
Power drift	± 5.0	Rectang.	√3	1	± 2.9	∞
Phantom and setup						
Phantom uncertainty	± 4.0	Rectang.	√3	1	± 2.3	∞
Liquid conductivity (target)	± 5.0	Rectang.	√3	0.6	± 1.7	∞
Liquid conductivity (meas)	± 10.0	Rectang.	√3	0.6	± 3.5	∞
Liquid permittivity (target)	± 5.0	Rectang.	√3	0.6	± 1.7	∞
Liquid permittivity (meas)	± 5.0	Rectang.	√3	0.6	± 1.7	∞
Combined standard uncertainty					± 13.6	
Extended standard uncertainty (k=2)					**± 27.1**	

Note: Any hard copy of this document is for reference only. Due to template and application dependecies the header and footer may fail to display correct data. It is the responsibility of the user to ensure that they have a corect and valid version. Any outdated hard copy is invalid and must be removed from possible use.

E.2 Uncertainty budget for measurements of 10g mass averaged SAR

Error description	Uncertainty (%)	Distrib.	Divisor	c_i 10g	Standard unc 10g (%)	v_i^2 or v_{eff}
Measurement system						
Probe calibration	± 4.4	Normal	1	1	± 4.4	∞
Axial isotropy	± 4.7	Rectang.	√3	$(1-c_p)^{1/2}$	± 1.9	∞
Spherical isotropy	± 9.6	Rectang.	√3	$(c_p)^{1/2}$	± 3.9	∞
Spatial resolution	± 0.0	Rectang.	√3	1	± 0.0	∞
Boundary effects	± 5.5	Rectang.	√3	1	± 3.2	∞
Probe linearity	± 4.7	Rectang.	√3	1	± 2.7	∞
Detection limit	± 1.0	Rectang.	√3	1	± 0.6	∞
Readout electronics	± 1.0	Normal	1	1	± 1.0	∞
Response time	± 0.8	Rectang.	√3	1	± 0.5	∞
Integration time	± 1.4	Rectang.	√3	1	± 0.8	∞
RF ambient conditions	± 3.0	Rectang.	√3	1	± 1.7	∞
Mech. Constraints of robot	± 0.4	Rectang.	√3	1	± 0.2	∞
Probe positioning	± 2.9	Rectang.	√3	1	± 1.7	∞
Extrap. and integration	± 3.9	Rectang.	√3	1	± 2.3	∞
Test sample related						
Device positioning	± 6.0	Normal	0.89	1	± 6.7	12
Device holder uncertainty	± 5.0	Normal	0.84	1	± 5.9	8
Power drift	± 5.0	Rectang.	√3	1	± 2.9	∞
Phantom and setup						
Phantom uncertainty	± 4.0	Rectang.	√3	1	± 2.3	∞
Liquid conductivity (target)	± 5.0	Rectang.	√3	0.6	± 1.4	∞
Liquid conductivity (meas)	± 10.0	Rectang.	√3	0.6	± 2.9	∞
Liquid permittivity (target)	± 5.0	Rectang.	√3	0.6	± 1.4	∞
Liquid permittivity (meas)	± 5.0	Rectang.	√3	0.6	± 1.4	∞
Combined standard uncertainty					± 13.3	
Extended standard uncertainty (k=2)					**± 26.6**	

Note: Any hard copy of this document is for reference only. Due to template and application dependecies the header and footer may fail to display correct data. It is the responsibility of the user to ensure that they have a corect and valid version. Any outdated hard copy is invalid and must be removed from possible use.