TEST REPORT
No.: 2-0004-11-18-1i

FCC Regulations
Part 15.109, Class B
Part 15.207 & 15.209 & Part 15.247
IC Regulations
RSS-Gen, Issue 3
RSS-210: Issue 8

for

Sony Ericsson Mobile Communications AB

Mobile Phone AAD-3880121-BV

FCC-ID: PY7A3880121
IC: 4170B-A3880121

Laboratory Accreditation and Listings			
DAkkS Deutsche Akkreditierungsstelle D-PL-12047-01-01	Reg. No.: 736496 MRA US-EU 0003	Industry Canada Reg. No.: 3462D-1 Reg. No.: 3462D-2 Reg. No.: 3462D-3	Voluntary Controls for Electromagnetic Emissions Reg. No.: R-2665, R-2666 C-2914, T-1967, G-301
WiFi ALLIANCE AUTHORIZED RF LABORATORY	CTIA Authorized Test Lab LAB CODE 20011130-00		
accredited according to DIN EN ISO/IEC 17025			

CETECOM GmbH
Laboratory Radio Communications & Electromagnetic Compatibility
Im Teelbruch 116 • 45219 Essen • Germany
Registered in Essen, Germany, Reg. No.: HRB Essen 8984
Tel.: + 49 (0) 20 54 / 95 19-954 • Fax: + 49 (0) 20 54 / 95 19-964
E-mail: info@cetecom.com • Internet: www.cetecom.com

The test results relate only to the individual items which have been tested. This report shall not be reproduced in parts without the written approval of the testing laboratory © Copyright: All rights reserved by CETECOM

Table of contents

1. SUMMARY OF TEST RESULTS 3

2. ADMINISTRATIVE DATA 5

2.1. Identification of the testing laboratory 5
2.2. Test location 5
2.3. Organizational items 5
2.4. Applicant's details 5
2.5. Manufacturer's details 5

3. EQUIPMENT UNDER TEST (EUT) 6

3.1. EUT: Type, S/N etc. and short descriptions used in this test report 6
3.2. Auxiliary Equipment (AE): Type, S/N etc. and short descriptions 6
3.3. EUT set-ups 7
3.4. EUT operating modes 7
3.5. Additional declaration and description of main EUT 8

4. DESCRIPTION OF TEST SET-UP'S 9

4.1. Test Set-up for conducted measurements 9
4.2. Test set-up for radiated measurements 9

5. MEASUREMENTS 11

5.1. Conducted emissions on AC-Power lines 11
5.2. Radiated field strength emissions below 30 MHz 13
5.3. Radiated field strength emissions, 30 MHz - 1 GHz 15
5.4. Radiated emissions, above 1GHz 18
5.5. 20-dB Bandwidth 23
5.6. Channel carrier frequency separation for FHHS-systems 26
5.7. Requirements on channel use, average channel use, input bandwidth and synchronization between signals for FHHS-systems 27
5.8. Specification for hopping channel numbers and time of occupancy for FHHS-systems 28
5.9. Power specification 30
5.10. 20dBc Emission specification 34
5.11. Radiated Band-Edge compliance measurements 38
5.12. Measurement uncertainties 40

6. INSTRUMENTS AND ANCILLARY 41

6.1. Used equipment "CTC" 41

7. CORRECTION FACTORS DUE TO REDUCED MEAS. DISTANCE (F< 30 MHZ) 45

Table of annex

	Total pages
SEPARATE DOCUMENT TR2-0004-11-18-1i-A1: MEASUREMENT DIAGRAMS	65
SEPARATE DOCUMENT TR2-0004-11-18-1i-A2: EXTERNAL PHOTOS OF EUT	6
SEPARATE DOCUMENT TR2-0004-11-18-1i-A3: PHOTOS OF TEST SET-UP	4

1. Summary of test results

The test results apply exclusively to the test samples as presented in chapter 3.1. The CETECOM GmbH does not assume responsibility for any conclusions and generalizations taken in conjunction with other specimens or samples of the type of the item presented to tests.

The presented EUT is a mobile phone with integrated Bluetooth® transmitter and integral antenna. For Bluetooth® technology below described tests show compliance, other implemented wireless technologies were not considered within this test report.

Following tests have been performed to show compliance with applicable FCC Part 2 and Part 15 rules of the FCC CFR 47 (2010-1-10 Edition) and Industry Canada RSS-210, Issue 8 and RSS-Gen, Issue 3 regulations.

1.1. TESTS OVERVIEW USA FCC and Canada IC Standards (RSS)

TEST CASES	PORT	REFERENCES & LIMITS			EUT set-up	EUT opera-ting mode	Result
		FCC Standard	RSS Section	TEST LIMIT			
TX-Mode							
20dB Bandwidth	Antenna terminal (conducted)	§15.247(a)(1)	RSS-210 Issue 8: A8.1 (a)(b)	At least 25kHz or 2/3 of 20dB bandwidth	2	1	Passed
Channel carrier frequency separation					2	1+2	
99% occuppied bandwidth	Antenna terminal (conducted)	--	RSS-Gen: Issue 3: Chapter 4.6.1	99% Power bandwidth	2	1	Passed
Channel use, average channel use, input bandwidth and synchronization between signals	--	§15.247(a)(1)	RSS-210 Issue 8: A8.1	See specification	--	--	Not performed remark 1
Channel average occupancy time and number of channels	Antenna terminal (conducted)	§15.247(a)(1) (iii)	RSS-210 Issue 8: A8.1(d)	0.4 seconds	2	2	Passed
Transmitter output power	Transmitter Peak output power	§15.247(b)(1)	RSS-210 Issue 8: A8.4 (2)	1Watt (0.125W)	2	1	Passed
Transmitter Output power radiated	Cabinet (radiated)	§15.247(b)(4)	RSS-210 Issue 8:A8.4 (2)	< 0.125mW (EIRP) for antenna with directional gain less 6dBi	2	1	Passed
Out-Of-Band RF-emissions Band-Edge emissions	Antenna terminal (conducted)	§15.247 (d)	RSS-210 Issue 8: A8.5	20 dBc & Emissions in restricted bands must meet the general field-strength radiated limits	2	1+2	Passed

General field strength emissions + restricted bands	Cabinet + Interconnecting cables (radiated)	§15.247 (d) §15.205 §15.209	RSS-210 Issue 8, Chapter 2.5 RSS-Gen: Issue 3: §7.2.5 Table 5+6	Emissions in restricted bands must meet the general field-strength radiated limits	1	1	Passed
AC-Power Lines Conducted Emissions	AC-Power lines	§15.207	RSS-Gen, Issue 3: Chapter 7.2.4, Table 4	FCC §15.107 class B limits §15.207 limits IC: Table 4, Chapter 7.2.4	3	3+4+5	Passed

Remark: 1.) See applicants declaration for compliance

RX Mode							
AC-Power Lines Conducted Emissions	AC-Power lines	§15.107	RSS-Gen, Issue 3: Chapter 7.2.4	FCC §15.107 class B limits §15.207 limits IC: Table 2, Chapter 7.2.2	3	3+4+5	Passed
RECEIVER Radiated emissions	Cabinet + Interconnecting cables (radiated)	§15.109 §15.33 §15.35	RSS-Gen, Issue 3: Chapter 6.1	FCC 15.109 class B limits IC-limits: Table 1, Chapter 6	1	4	Passed

Remarks: 1. Specification should be fullfilled with Bluetooth® Core tests, see separate applicants test report

ATTESTATION:

I declare that all measurements were performed by me or under my supervision and that all measurements have been performed and are correct to my best knowledge and belief to Industry Canada standards. All requirements as shown in above table are met in accordance with enumerated standards.

CETECOM™ GmbH
Im Teelbruch 116
45219 Essen
Tel.: + 49 (0) 20 54 / 95 19 - 0
Fax: + 49 (0) 20 54 / 95 19 - 997

W. Richter
.....
Dipl.-Ing. W. Richter
Responsible for testsection

.....
Dipl.-Ing. C. Lorenz
Responsible for test report

2. Administrative Data

2.1. Identification of the testing laboratory

Company name:	CETECOM GmbH
Address:	Im Teelbruch 116 45219 Essen - Kettwig Germany
Responsible for testing laboratory:	Dipl.-Ing. W. Richter
Deputy:	Dipl.-Ing. J. Schmitt
Laboratory accreditations/Listings:	DAkkS-Registration No. D-PL-12047-01-01 FCC-Registration No.: 736496, MRA US-EU 0003 IC-Registration No. 3462D-1, 3462D-2, 3462D-3 VCCI Registration No. R-2665,R-2666,C-2914,T-1967,G-301

2.2. Test location

2.2.1. Test laboratory “CTC”

Company name:	see chapter 2.1. Identification of the testing laboratory

2.3. Organizational items

Order No.:	2-0004-11-18
Responsible for test report and project leader:	Dipl.-Ing. C. Lorenz
Receipt of EUT:	2011-07-31
Date(s) of test:	2011-07-31 to 2011-08-31
Date of report:	2011-09-05
Version of template: 11.05 _All.Dotm	

2.4. Applicant’s details

Applicant’s name:	Sony Ericsson Mobile Communications AB
Address:	Nya Vattentornet 221-88 Lund Sweden
Contact person:	Mr. Anders Nordlöf

2.5. Manufacturer’s details

Manufacturer’s name:	please see Applicant's details
Address:	please see Applicant's details

3. Equipment under test (EUT)

3.1. EUT: Type, S/N etc. and short descriptions used in this test report

Short descrip-tion*)	EUT	Type	S/N serial number	HW hardware status	SW software status
EUT A	Mobile Phone	AAD-3880121-BV	IMEI: 004402142783 376 (CB5A1EYWHP) (COND BT)	AP1	4.0.1.A.0.57 ATP R1A034
EUT B	Mobile Phone	AAD-3880121-BV	IMEI: 00440214-2783384 (CB5A1EYWJ3) (RAD#1,#20409)	AP1	4.0.1.A.0.57 ATP R1A034
EUT C	AC-Charger	CAA-0002016-BV	#19318	EP800	--
EUT D	Battery Li-Io 1200mAh	EP500	1057114SWOE NS	11W03	--
EUT E	USB cable	EC700	#1	--	--
EUT F	Mobile Phone	AAD-3880121-BV	IMEI: 004402142783 459 (CB5A1EYWHH)	AP1	4.0.A.0.110

*) EUT short description is used to simplify the identification of the EUT in this test report.

3.2. Auxiliary Equipment (AE): Type, S/N etc. and short descriptions

AE short descrip-tion *)	Auxiliary Equipment	Type	S/N serial number	HW hardware status	SW software status
AE 1	Dummy battery	For EUT A	--	--	--
AE 2	Notebook	Dell D630	SEM#2	--	Windows Vista + Firmware program
AE 3	BT-Headset DS970	DDA-0002005	BDA:0016B80 7A7F3	R1A	--

*) AE short description is used to simplify the identification of the auxiliary equipment in this test report.

3.3.EUT set-ups

EUT set-up no.*)	Combination of EUT and AE	Remarks
Set. 1	EUT B + EUT D + (EUT E) + (AE2)	Used for radiated RF-tests. Notebook disconnected from EUT after establishing TX-Mode
Set. 2	EUT A + AE 1 + (EUT E)+ (AE2)	Used for conducted RF-tests. Notebook disconnected from EUT after establishing TX-Mode
Set. 3	EUT C + EUT D + EUT E + EUT F + AE 3	Used for conducted emission tests on AC-mains. AE3 acts as slave within Bluetooth connection.

*) EUT set-up no. is used to simplify the identification of the EUT set-up in this test report.

3.4. EUT operating modes

EUT operating mode no.*)	Description of operating modes	Additional information
op. 1	TX-Mode	With help of special test firmware a continuous traffic mode could be established with help of a Bluetooth base simulator. (R&S CBT32)
op. 2	TX-Mode hopping on	Hopping mode was activated with help of a Bluetooth base simulator. (R&S CBT32)
op. 3	TX-Mode	Bluetooth traffic establish to a second BT-device. (BT-Headset)
op. 4	RX-Mode	With help of special test firmware RX-mode was set-up.
op. 5	Battery charging	A empty battery was charged during the tests.

*) EUT operating mode no. is used to simplify the test report.

3.5. Additional declaration and description of main EUT

Main function	Mobile phone with integrated Bluetooth® Transceiver		
Type	AAD-3880121-BV		
Frequency range (US/Canada -bands)	2402 MHz (Channel 0) to 2480 MHz (Channel 78)		
Type of modulation (packet types)	DH1/DH3/DH5 – GFSK 2DH1/2DH3/2DH5 – Pi/4 DQPSK 3DH1/3DH3/3DH5 – 8DPSK		
Number of channels (USA/Canada -bands)	0 to 78		
Antenna Type	☒ Integrated ☐ External, no RF- connector ☐ External, separate RF-connector		
Antenna Gain	Maximum -0.5 dBi gain according applicants information in 2.4GHz band		
MAX Field strength (radiated):	101.55 dBµV/m@3m distance on nominal 2402 MHz		
FCC-ID	PY7A3880121		
IC	4170B-A3880121		
Installed option	☒ additional wireless technologies: GSM/UMTS/W-LAN/ANT+ ☒ battery charging option over separated AC charger ☒ GPS		
Power supply	Li-Io. Battery: range from 3.5V (V_{min}) to 4.1 V (V_{max})		
Special EMI components	--		
EUT sample type	☐ Production	☒ Pre-Production	☐ Engineering

4. DESCRIPTION OF TEST SET-UP's

4.1. Test Set-up for conducted measurements

EUT's RF-signal is first attenuated by 20dB before it is feed to the spectrum analyzer. Customers RF-adapters are used in case of no suitable RF-Adapters are mounted on the EUT. The specific attenuation losses for the RF-signal path is determined within a path-loss calibration and the readings corrected therefore.

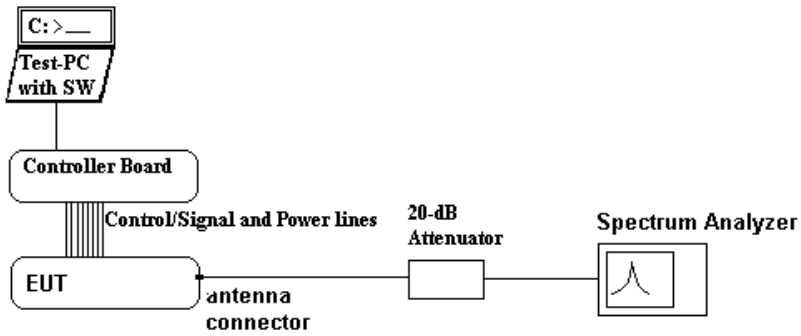

Schematic: Test set-up 3: conducted for RF-tests

4.2. Test set-up for radiated measurements

MEASUREMENT METHOD (30 MHz<f <1 GHz):

A EMI analyzer together with a broadband antenna was used in order to identify the emissions from the EUT by positioning the antenna close to the EUT surfaces. The interconnecting cables and equipment position were

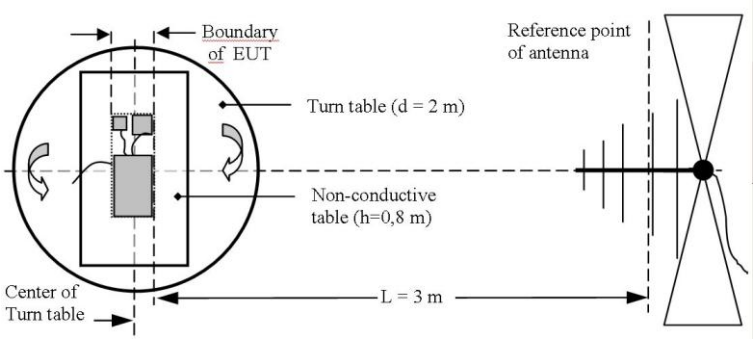

varied in order to maximize the emissions. Then most critical frequencies are recorded for further investigations. Based on the exploratory measurements, the most critical frequencies are re-measured by maintaining the EUT's operating mode, cable position, etc. The EUT was placed on a non-conductive support of 0.8 m height. By rotating the turntable angle in the range 0 to 360 degree, the EUT itself either over 3-orthogonal axis (not defined usage position) or 2-orthogonal axis (defined usage position) and the measurement antenna height from 1 meter to 4 meters, the maximized emissions are recorded. The measurements are performed for both polarizations of the measuring antenna: horizontal and vertical.

MEASUREMENT METHOD (1GHz<f <26.5 GHz):

The EUT and accessories are placed on a non-conducting tipping table of 0.8 meter height (semi-anechoic chamber) or 1.55m height (fully-anechoic chamber) which is situated in the middle of the turntable. The turntable can rotate the device under test 360 degree, the tipping table can rotate the device from laid to standing position. This way the device under test can be rotated in all three orthogonal planes in order to maximize the detected emissions. The turn- and tipping table are controlled by a controller unit. All positions manipulations are software controlled from a operator PC.
The measurements are performed for both receiving antenna polarisations: vertical and horizontal.

Up to 18GHz a measurement distance of 3 meters is used, above 18GHz the distance is 1 meter. A biconical-logarithmic antenna up to 1 GHz and a logarithmic-periodic antenna for frequencies above 1 GHz up to 26.5GHz is used. For frequencies above 26.5GHz a horn antenna is used, pls. compare the equipment list for more details.

The EUT is powered either by a external DC-supply with nominal voltage or a AC/DC power supply as accessory. The communication signalling (if necessary for operation) is performed from outside the chamber with a Bluetooth® communication test simulator and a signalling antenna place near the EUT.

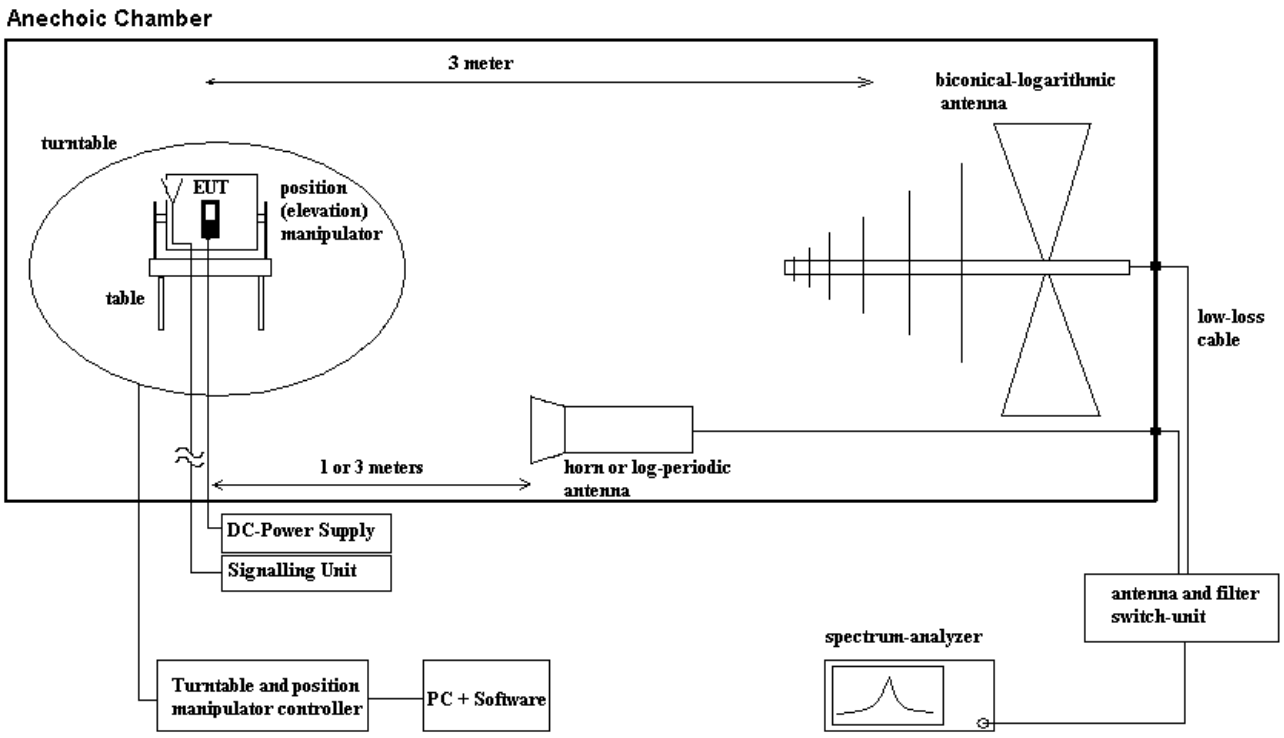

Schematic: radiated measurements test set-up

5. Measurements

5.1. Conducted emissions on AC-Power lines

TEST LOCATION AND EQUIPMENT (for reference numbers please see chapter 'List of test equipment')

test location	☒ CETECOM Essen (Chapter 2.2.1)		☐ Please see Chapter 2.2.2		☐ Please see Chapter 2.2.3	
test site	☐ 333 EMI field	☒ 348 EMI cond.	☐ 334 EMS-field	☐ 335 EMS cond	☐ 347 Radio.lab.	☐ 337 OATS
receiver	☐ 001 ESS	☒ 377 ESCS 30	☐	☐	☐	☐
LISN	☒ 005 ESH2-Z5	☐ 007 ESH3-Z6	☐ 300 ESH3-Z5 & 50Ω used for AE		☐ no LISN for AE	☐
signaling	☐ 017 CMD 65	☐ 323 CMD 55	☐ 340 CMD 55			
signaling	☐ 298 CMU	☐ 460 CMU	☐ 295 RACAL	☐ 392 MT8820A		
line voltage	☐ 230 V 50 Hz via public mains		☒060 110 V 60 Hz via PAS 5000			

STANDARDS AND LIMITS: PART 15, SUBPART B, §15.107, §15.207, CANADA: RSS-Gen, ANSI C63.4:2009

Frequency [MHz]	Conducted limit [dBµV] Class B	
	QUASI-Peak	AVERAGE
0.15 – 0.5	66 to 56*	56 to 46*
0.5 – 5	56	46
5 – 30	60	50
Remark: * decreases with the logarithm of the frequency		

TEST CONDITION AND MEASUREMENT PROCEDURES TEST SET-UP

link to test system (if used):	☒ air link	☐ cable connection	☐
EUT-grounding	☒ none	☐ with power supply	☐ additional connection
Equipment set up	☒ table top (40 cm distance to reference ground plane (wall)		☐ floor standing EUT stands isolated on reference ground plane (floor)
Climatic conditions	Temperature: (23°C)		Rel. humidity: (61)%
EMI-Receiver (Analyzer) Settings	Span/Range: 150 kHz to 30 MHz RBW: 9 kHz Detector/Mode: Max PEAK-hold, repetitive scan for preliminary testing Quasi-Peak Detector and Average-Detector for final measurement according ANSI 63.4, CISPR 16		

Devices which can be connected to the public AC-power network, should be tested against the radio frequency voltage conducted back into the AC-power line in the frequency range 150kHz to 30 MHz. Compliance should be tested by measuring the radio frequency voltage between each power line and ground at the power terminals in the stated frequency range.
A 50Ohm/50µH line impedance stabilization network (LISN) is used therefore. The EUT power input leads are connected through the LISN to the AC-power source. The LISN enclosure is electrically connected to the GND-plane. The measuring instrument is connected to the coaxial output of the LISN.
Tabletop devices were set-up on a 80 cm height over reference ground plane, floor standing equipment 10 cm raised above ground plane.
Measurements have been performed on each phase line and neutral line of the devices AC-power lines. The EUT was power supplied with 110 V/60Hz over an AC/DC mobile phone battery charger.
The EUT was tested in the defined operating mode and installed (connected) to accessory equipment according the general description of use given by the applicant. The tests have been performed with a empty battery on the beginning of the tests.
Preliminary testing as a first step, determines the worst-case phase line (neutral or phase) as well as the most critical amplitude by changing the operating mode. A complete frequency-sweep is performed with PK-Detector.
Final testing for power phases and critical frequencies (Margin to AV- or QP limit lower than 3dB) as a second step includes measurements either on discrete frequency components with receivers detector set to Quasi-Peak and Average per frequency component or a complete sweet with corresponding detector.

MEASUREMENT RESULTS

EUT Type and S/N or EUT set-up no.	EUT set-up 3				
Diagram No.	Command or EUT operating mode or operating mode no.	Detector (Peak, CISPR AV, CISPR QP)	Power line (L1, L2, L3, N)	Additional (scan-) information (e.g. Pre-test Fast scan, Maxhold, Final measurement)	Result (passed / failed /final measurem. necessary)
I_1.03	EUT operating mode: 3+4+5	Peak, AV,QP	L1, N	The Diagram shows PK/AV detector measurements on L1 and N with maxhold mode. Final measurement QP and AV was carried out on at least one frequency (please see diagram)	passed

Remarks: The diagram contains the maximum values from L 1 + N

Margin to Limit for verdict: $M = L_T - R_R + C_{Loss}$

Abbreviations used:
- R_R : Receiver readings in dBµV
- C_{Loss}: cable loss
- L_T : Limit in dBµV

VERDICT

Summary of measurement results for conducted emissions on AC-Power lines: Passed

5.2. Radiated field strength emissions below 30 MHz

TEST LOCATION AND EQUIPMENT (for reference numbers please see chapter 'List of test equipment')

test location	☒ CETECOM Essen (Chapter. 2.2.1)		☐ Please see Chapter. 2.2.2		☐ Please see Chapter. 2.2.3	
test site	☒ 441 EMI SAR	☐ 487 SAR NSA	☐ 337 OATS	☐ 347 Radio.lab.	☐	☐
receiver	☐ 377 ESCS30	☒ 001 ESS	☐	☐	☐	☐
spectr. analys.	☐ 584 FSU	☐ 120 FSEM	☐ 264 FSEK	☐	☐	☐
antenna	☐ 574 BTA-L	☐ 133 EMCO3115	☐ 302 BBHA9170	☐ 289 CBL 6141	☒ 030 HFH-Z2	☐ 477 GPS
signaling	☐ 298 CMU	☐ 460 CMU	☐ 295 RACAL	☐ 392 MT8820A	☒ 371 CBT32	
power supply	☐ 456 EA 3013A	☐ 457 EA 3013A	☐ 459 EA 2032-50	☐ 268 EA- 3050	☐ 494 AG6632A	☐ 498 NGPE 40
otherwise	☐ 400 FTC40x15E	☐ 401 FTC40x15E	☐ 110 USB LWL	☐ 482 Filter Matrix		
line voltage	☐ 230 V 50 Hz via public mains		☐060 110 V 60 Hz via PAS 5000			

STANDARDS AND LIMITS: CFR 47, §15.205, §15.209, RSS-Gen, ANSI C63.10:2009,

Frequency [MHz]	Field strength [µV/m]	Field strength [dBuV/m]	Measurement distance [meters]	Remarks
0.009 – 0.490	2400/f (kHz)	67.6 – 20Log(f) (kHz)	300	Correction factor used due to measurement distance of 3m
0.490 – 1.705	24000/f (kHz)	87.6 – 20 Log(f) (kHz)	30	Correction factor used due to measurement distance of 3m
1.705 – 30	30	29.54	30	Correction factor used due to measurement distance of 3m
Remark: * decreases with the logarithm of the frequency				

TEST CONDITION AND MEASUREMENT TEST SET-UP

link to test system (if used):	☒ air link	☐ cable connection	☐
EUT-grounding	☒ none	☐ with power supply	☐ additional connection
Equipment set up	☒ table top		☐ floor standing
Climatic conditions	Temperature: (18°C)		Rel. humidity: (46)%
EMI-Receiver (Analyzer) Settings	Span/Range: 9kHz to 150kHz; 150 kHz to 30 MHz RBW/VBW: 200Hz/auto; 10 kHz/ auto (ANSI63.10/CISPR#16) Detector/ Mode: PEAK, TRACE max-hold mode, repetitive scan for exploratory measurements Quasi-Peak, for final measurement on critical frequencies (f<1GHz)		

GENERAL MEASUREMENT PROCEDURES:

The measurement test set-up and test procedure are in accordance with the provisions described in ANSI 63.10: 2009

The **Equipment under Test** (EUT) was set-up to defined operating mode and installed (connected) to accessory equipment according the general description of use given by the applicant.

The measurement loop antenna was situated in 3m distance to the EUT. Between EUT and measurement antenna absorbers are covering the GND-Plane. With these absorbers the chamber fulfills CIPR16-1-4 site VSWR-criteria. Radiated magnetic emission measurements were made with the antenna situated in 1 meter height. The loop antenna was moved at least to 2-perpendicular axes (antenna vector in direction of EUT and parallel to EUT) in order to maximize the emissions, the EUT itself either over 3-orthogonal axes (no defined usage position) or 2-orthogonal axis (defined usage position) by the position manipulator.

According the standard the compliance should be checked in 30m and 300m measurement distance. Therefore a additional extrapolation factor was used in order to normalize the measurement data. The frequency dependent extrapolation factor used for this reduced measurement distance, can be found in the chapter annexes.

MEASUREMENT RESULTS

Channel Low=0

Set-up No.		1								
Operating Mode		1								
Diagram no.	Frequency (kHz)	MaxPeak (dBµV/m)	Meas. Time (ms)	Bandwidth (kHz)	Antenna height (m)	Polarity	Turntable position (deg)	Corr. (dB) (C_F)	Margin (dB) (M)	Limit (dBµV/m) (L_T)
I_3.01	9..150	< -65.0	10.0	0.2	1	--	0°..360°	--	> 20dB	See diagram
	150..30000	< 15.0	10.0	10.0	1	--		--	> 14.54	29.54

Remark: *.) see also plots enclosed in annex A1

Channel middle=39

Set-up No.		1								
Operating Mode		1								
Diagram no.	Frequency (kHz)	MaxPeak (dBµV/m)	Meas. Time (ms)	Bandwidth (kHz)	Antenna height (m)	Polarity	Turntable position (deg)	Corr. (dB) (C_F)	Margin (dB) (M)	Limit (dBµV/m) (L_T)
I_3.02	9..150	< -63.55	10.0	0.2	1	--	0°..360°	--	> 20dB	See diagram
	150..30000	< 15.11	10.0	10.0	1	--		--	> 14.43	29.54

Remark: *.) see also plots enclosed in annex A1

Channel high=78

Set-up No.		1								
Operating Mode		1								
Diagram no.	Frequency (kHz)	MaxPeak (dBµV/m)	Meas. Time (ms)	Bandwidth (kHz)	Antenna height (m)	Polarity	Turntable position (deg)	Corr. (dB) (C_F)	Margin (dB) (M)	Limit (dBµV/m) (L_T)
I_3.03	9..150	< -64.0	10.0	0.2	1	--	0°..360°	--	> 20dB	See diagram
	150..30000	< 15.00 (PK)	10.0	10.0	1	--		--	> 14.54	29.54
	19.275	7.24 (QP)	1000	10.000	1	--	114.0	2.71	22.30	29.54

Remark: *.) see also plots enclosed in annex A1

Margin to Limit:

$$M = L_T - R_R + C_F + D_F$$
$$= L_T - R_R + \left(AF_{ANTENNA} + Cable_{LOSS}\right) + D_F$$

Remark: positive margin means passed result

Abbreviations used:

- R_R : Receiver readings in dBµV/m
- C_F: Transducer in dB = AF (antenna factor) + CL (cable loss)
- D_F : distance correction factor (if different measurement distance used than specified in the standard
- L_T : Limit in dBµV/m

VERDICT: Summary of measurement results for radiated frequencies below 30 MHz - passed

5.3. Radiated field strength emissions, 30 MHz - 1 GHz

TEST LOCATION AND EQUIPMENT (for reference numbers please see chapter 'List of test equipment')

test location	☒ CETECOM Essen (Chapter. 2.2.1)		☐ Please see Chapter. 2.2.2		☐ Please see Chapter. 2.2.3	
test site	☒ 441 EMI SAR	☐ 487 SAR NSA	☐ 337 OATS	☐ 347 Radio.lab.	☐	☐
receiver	☐ 377 ESCS30	☒ 001 ESS	☐	☐	☐	☐
spectr. analys.	☐ 584 FSU	☐ 120 FSEM	☐ 264 FSEK	☐	☐	☐
antenna	☐ 574 BTA-L	☐ 133 EMCO3115	☐ 302 BBHA9170	☐ 289 CBL 6141	☐ 030 HFH-Z2	☐ 477 GPS
signaling	☐ 298 CMU	☐ 460 CMU	☐ 295 RACAL	☐ 392 MT8820A	☒ 371 CBT32	
power supply	☐ 456 EA 3013A	☐ 457 EA 3013A	☐ 459 EA 2032-50	☐ 268 EA- 3050	☐ 494 AG6632A	☐ 498 NGPE 40
otherwise	☐ 400 FTC40x15E	☐ 401 FTC40x15E	☐ 110 USB LWL	☒ 482 Filter Matrix		
line voltage	☐ 230 V 50 Hz via public mains		☐060 110 V 60 Hz via PAS 5000			

STANDARDS AND LIMITS: CFR 47, PART 15B, §15.209, RSS-Gen, ANSI C63.10:2009, ANSI 63.4:2009

Frequency [MHz]	Radiated emission limits3 meters	
	QUASI-Peak [microvolts/meter]	QUASI-Peak [dBµV/m]
30-88	100	40
88-216	150	43,5
216-960	200	46,0
above 960	500	54,0

TEST CONDITION AND MEASUREMENT TEST SET-UP

link to test system (if used):	☒ air link	☐ cable connection	☐
EUT-grounding	☒ none	☐ with power supply	☐ additional connection
Equipment set up	☒ table top 0.8m height		☐ floor standing
Climatic conditions	Temperature: (18°C)		Rel. humidity: (70)%
EMI-Receiver (Analyzer) Settings	Span/Range: 30 MHz to 1 GHz RBW/VBW: 120 kHz / (auto) Detector/ Mode: PEAK, TRACE max-hold mode, repetitive scan Quasi-Peak, for final measurement for critical measurements		

RESTRICTED BANDS OF OPERATION, §15.205

MHz	MHz	MHz	GHz
0.090-0.110	16.42-16.423	399.9-410	4.5-5.15
0.495-0.505	16.69475-16.69525	608-614	5.35-5.46
2.1735-2.1905	16.80425-16.80475	960-1240	7.25-7.75
4.125-4.128	25.5-25.67	1300-1427	8.025-8.5
4.20725-4.20775	73-74.6	1645.5-1646.5	9.3-9.5
6.215-6.218	74.8-75.2	1660-1710	10.6-12.7
6.26775-6.26825	108-121.94	1718.8-1722.2	13.25-13.4
6.31175-6.31225	123-138	2200-2300	14.47-14.5
8.291-8.294	149.9-150.05	2310-2390	15.35-16.2
8.362-8.366	156.52475-156.52525	2483.5-2500	17.7-21.4
8.37625-8.38675	156.7-156.9	2690-2900	22.01-23.12
8.41425-8.41475	162.0125-167.17	3260-3267	23.6-24.0
12.29-12.293	167.72-173.2	3332-3339	31.2-31.8
12.51975-12.52025	240-285	3345.8-3358	36.43-36.5
12.57675-12.57725	322-335.4	3600-4400	--
13.36-13.41	--	--	--

Remark: only spurious emissions are allowed within these frequency bands not exceeding the limits per §15.209

GENERAL MEASUREMENT PROCEDURES:
The measurement test set-up and test procedure are in accordance with the provisions described in ANSI 63.4: 2009 (RX-mode) and ANSI63.10:2009. (TX-mode)

The ***Equipment under Test*** (EUT) set-up to defined operating mode and installed (connected) to accessory equipment according the general description of use given by the applicant.

5.3.1. Radiated emissions below 1GHz, TX-Mode according FCC §15.209, RSS-Gen, RSS-210

Channel Low (Channel 0)

Set-up No.		1								
Operating Mode		1								
Diagram no.	Frequency (MHz)	MaxPeak (dBµV/m)	Meas. Time (ms)	Bandwidth (kHz)	Antenna height (m)	Polarity	Turntable position (deg)	Corr. (dB) (C_F)	Margin (dB) (M)	Limit (dBµV/m) (L_T)
I_2.12	30..1000	< 42.5 1.)	0.1	120.000	1..4	H&V	0°..360°	--	> 6dB	See diagramm

Remark: *.) see also plots enclosed in annex A1
1.) Noise level, no peaks found

Channel middle (Channel 39)

Set-up No.		1								
Operating Mode		1								
Diagram no.	Frequency (MHz)	MaxPeak (dBµV/m)	Meas. Time (ms)	Bandwidth (kHz)	Antenna height (m)	Polarity	Turntable position (deg)	Corr. (dB) (C_F)	Margin (dB) (M)	Limit (dBµV/m) (L_T)
I_2.13	30..1000	< 42.5 1.)	0.1	12.0	1..4	H&V	0°..360°	--	> 6dB	See diagramm

Remark: *.) see also plots enclosed in annex A1
1.) Noise level, no peaks found

Channel high (Channel 78)

Set-up No.		1								
Operating Mode		1								
Diagram no.	Frequency (MHz)	MaxPeak (dBµV/m)	Meas. Time (ms)	Bandwidth (kHz)	Antenna height (m)	Polarity	Turntable position (deg)	Corr. (dB) (C_F)	Margin (dB) (M)	Limit (dBµV/m) (L_T)
I_2.14	42.67	14.61	1000	120.0	3.60	V	36°	16.16	25.40	40.0
	649.27	25.68	1000	120.0	1.13	V	39°	23.47	20.30	46.0
	838.68	29.36	1000	120.0	1.19	V	106.0°	25.32	16.60	46.0

Remark: *.) see also plots enclosed in annex A1

5.3.2. Radiated emissions, below 1GHz, RX-Mode according FCC §15.109 class B, RSS-Gen

Channel Middle (Channel 39)

Set-up No.		1								
Operating Mode		4								
Diagram no.	Frequency (MHz)	MaxPeak (dBµV/m)	Meas. Time (ms)	Bandwidth (kHz)	Antenna height (m)	Polarity	Turntable position (deg)	Corr. (dB) (C_F)	Margin (dB) (M)	Limit (dBµV /m) (L_T)
I_2.15	30..1000	< 30.2 (QP)	1000	100	1..4	H/V	0°..360°	--	> 15.8	See diagram

Remark: *.) see also plots enclosed in annex A1

Margin to Limit:	***Abbreviations used:***
$M = L_T - R_R + C_F + D_F$ $= L_T - R_R + (AF_{ANTENNA} + Cable_{LOSS}) + D_F$ Remark: positive margin means passed result	• R_R : Receiver readings in dBµV/m • CF: Transducer in dB = AF (antenna factor) + CL (cable loss) • D_F : distance correction factor (if different measurement distance used than specified in the standard • L_T : Limit in dBµV/m

VERDICT

Summary of measurement results for radiated emissions above 30 MHz and below 1 GHz : Passed

5.4. Radiated emissions, above 1GHz

TEST LOCATION AND EQUIPMENT (for reference numbers please see chapter 'List of test equipment')

test site	☐ 441 EMI SAR	☐ 348 EMI cond.	☒ 443 EMI FAR	☐ 347 Radio.lab.	☐ 337 OATS	☐
equipment	☐ 331 HC 4055	☐	☐	☐	☐	☐
spectr. analys.	☐ 584 FSU	☐ 120 FSEM	☐ 264 FSEK	☒ 489 ESU	☐	☐
antenna meas	☐ 574 BTA-L	☐ 289 CBL 6141	☐ 439 HL 562	☒ 549 HL025	☐ 302 BBHA9170	☐ 477 GPS
antenna meas	☐ 123 HUF-Z2	☐ 132 HUF-Z3	☐ 030 HFH-Z2	☐	☐	☐
antenna subst	☐ 071 HUF-Z2	☐ 020 EMCO3115	☐ 063 LP 3146	☐ 303 BBHA9170	☐	☐
power meter	☐ 009 NRV	☐ 010 URV5-Z2	☐ 011 URV5-Z2	☐	☐	☐
signalgener.	☐ 008 SMG	☐ 140 SMHU	☐ 263 SMP04	☐	☐	☐
power meter	☐ 262 NRV-S	☐ 266 NRV-Z31	☐ 265 NRV-Z33	☐ 261 NRV-Z55	☐ 356 NRV-Z1	☐
multimeter	☐ 341 Fluke 112	☐	☐	☐	☐	☐
signaling	☐ 298 CMU	☐ 460 CMU	☐ 295 RACAL	☒ 371 CBT32		
DCpower	☐ 086 LNG50-10	☐ 087 EA3013	☐ 354 NGPE 40	☐ 349 car battery	☐ 350 Car battery	☐
line voltage	☐ 230 V 50 Hz via public mains		☐060 110 V 60 Hz via PAS 5000			

STANDARDS AND LIMITS: CFR 47, §15.109 (CLASS B), §15.209, RSS-Gen, ANSI C63.10:2009, ANSI 63.4:2009

Frequency [MHz]	Radiated emission limits, 3 meters measurement distance			
	AV [microvolts/meter]	AV [dBµV/m]	Peak [microvolts/meter]	Peak [dBµV/m]
above 1GHz	500	54.0	5000	74.0

TEST CONDITION AND MEASUREMENT TEST SET-UP

link to test system (if used):	☒ air link	☐ cable connection	☐
EUT-grounding	☒ none	☐ with power supply	☐ additional connection
Equipment set up	☒ table top 1.5m height		☐ floor standing
Climatic conditions	Temperature: (24.6°C)		Rel. humidity: (41)%
Spectrum-Analyzer settings	Span/Frequency range :	1..18 GHz +single frequencies determined in step 1	
	RBW/VBW:	1 MHz / 3 MHz	
	Detector/ Mode:	Peak, MAX-hold, repetitive scan for exploratory measurement PEAK/ AVERAGE, for final measurement for critical frequencies	
	Antenna Polarisation	Horizontal / Vertical	

GENERAL MEASUREMENT PROCEDURES:

The measurement test set-up and test procedure are in accordance with the provisions described in ANSI 63.4: 2009 (for RX mode) and ANSI 63.10:2009 (TX mode)

The ***Equipment under Test*** (EUT) was placed on a non-conductive positioning table of 0.8 or 1.5 meter height depending from the frequency range. The measuring distance was set to 3 meter for frequencies up to 18GHz and 1 meter above 18GHz.
The EUT was set-up to defined operating mode and installed (connected) to accessory equipment according the general description of use given by the applicant.

1. **Step exploratory measurement**: see above description as in the frequency range lower 1GHz.
2. **Step Final Measurement(1 GHz<f <18 GHz)**: On the Worst-Case EUT configuration, frequency components with a margin lower than 6 dB to the limits, will be re-measured by maintaining the EUT's operating mode, cable position, etc.. For find the worst-case emission, the turntable was changed in the range 0 to 360 degree and the EUT itself either over 3-orthogonal axis (not defined usage position) or 2-orthogonal axis (defined usage position). The measurements are performed for both polarizations of the measuring antenna: horizontal and vertical.

5.4.1. Radiated emissions above 1GHz, TX-Mode according FCC §15.209, RSS-Gen, RSS-210

Channel low=0

Set-up No.:		1								
Operating Mode:		1								
Diagram no.	Frequency (MHz)	MaxPeak (dBµV/m)	Meas. Time (ms)	Bandwidth (kHz)	Antenna height (cm)	Polarity	Turntable position (deg)	Corr. (dB) (C_F)	Margin (dB) (M)	Limit (dBµV /m) (L_T)
I_2.04	2094.0	57.20 (PK)	10	1000	155	H/V	0°..360°	--	> 16.80	74.0 (PK)
	2772.0	59.09 (PK)							> 14.91	74.0 (PK)
	2783.5	45.93 (AV)	10	1000	155	H/V	0°..360°	--	> 8.07	54.0

Remark: 1.) diagrams shows PK/AV detector measurements, see also plots enclosed in annex A1
2.) Bluetooth carrier on diagram

Channel low=0

Set-up No.:		1								
Operating Mode:		1								
Diagram no.	Frequency (MHz)	MaxPeak (dBµV/m)	Meas. Time (ms)	Bandwidth (kHz)	Antenna height (cm)	Polarity	Turntable position (deg)	Corr. (dB) (C_F)	Margin (dB) (M)	Limit (dBµV/ m) (L_T)
I_2.05	4797.0	42.31 (PK)	10	1000	155	V	37.0	--	>20	74.0 (PK)
	7204.7	47.02 (PK)							> 20dBc	General limit not applica ble
	4804.1	30.95 (AV)	10	1000	155	H	129	2.64	> 8.07	54.0

Remark: 1.) diagrams shows PK/AV detector measurements, see also plots enclosed in annex A1
2.) measurements from 18 to25 GHz performed as exploratory measurements only, no peaks found

Channel middle=39

Set-up No.:		1								
Operating Mode:		1								
Diagram no.	Frequency (MHz)	MaxPeak (dBµV/m)	Meas. Time (ms)	Bandwidth (kHz)	Antenna height (cm)	Polarity	Turntable position (deg)	Corr. (dB) (C_F)	Margin (dB) (M)	Limit (dBµV /m) (L_T)
I_2.06	2381.1	60.94 (PK)	100	1000	155	H	168°		> 13.10	74.0 (PK)
	1000.. 2800	59.09 (PK)	10	1000	155	H/V	0°..360°	--	> 13.10	74.0 (PK)
	1000.. 2800	46.09(AV)	10	1000	155	H/V	0°..360°	--	> 7.91	54.0 (AV)
I_2.06a	2381.3	49.05 (AV)	100	1000	155	H	143°	35.422	> 4.9	54.0

Remark: 1.) diagrams shows PK/AV detector measurements, see also plots enclosed in annex A1
2.) Bluetooth carrier on diagram

Channel middle=39

Set-up No.:		1								
Operating Mode:		1								
Diagram no.	Frequency (MHz)	MaxPeak (dBµV/m)	Meas. Time (ms)	Bandwidth (kHz)	Antenna height (cm)	Polarity	Turntable position (deg)	Corr. (dB) (CF)	Margin (dB) (M)	Limit (dBµV /m) (LT)
I_2.07	2800 .. 18000	< 64.0	10	1000	155	H&V	0°..360°	--	> 10.0	74.0 (PK)
	2800 .. 18000	< 51.0	10	1000	155	H&V	0°..360°	--	> 4.0	54.0 (AV)

Remark: 1.) diagrams shows PK/AV detector measurements, see also plots enclosed in annex A1
2.) measurements from 18 to25 GHz performed as exploratory measurements only, no peaks found

Channel high=78

Set-up No.:	1									
Operating Mode:	1									
Diagram no.	Frequency (MHz)	MaxPeak (dBµV/m)	Meas. Time (ms)	Bandwidth (kHz)	Antenna height (cm)	Polarity	Turntable position (deg)	Corr. (dB) (CF)	Margin (dB) (M)	Limit (dBµV /m) (LT)
I_2.08	2384.5	61.32	100	1000	155	V	96°	35.422	> 12.68	74.0 (PK)
	2627.0	59.58	10	1000	155	H&V	0°..360°	--	> 20dBc	General limit not applica ble
	2388.9	49.10	100	1000	155	H	2°	35.422	> 4.9	54.0 (AV)

Remark: 1.) diagrams shows PK/AV detector measurements, see also plots enclosed in annex A1
2.) Bluetooth carrier on diagram

Channel high=78

Set-up No.:	1									
Operating Mode:	1									
Diagram no.	Frequency (MHz)	MaxPeak (dBµV/m)	Meas. Time (ms)	Bandwidth (kHz)	Antenna height (cm)	Polarity	Turntable position (deg)	Corr. (dB) (C_F)	Margin (dB) (M)	Limit (dBµV /m) (L_T)
I_2.09	2800 .. 18000	< 64.0	10	1000.000	155	H&V	0..360°	--	> 10.0	74.0 (PK)
	2800 .. 18000	< 51.0	10	1000.000	155	H&V	0..360°	--	> 4.0	54.0 (AV)

Remark: 1.) diagrams shows PK/AV detector measurements, see also plots enclosed in annex A1
2.) measurements from 18 to25 GHz performed as exploratory measurements only, no peaks found

5.4.1. Radiated emissions, above 1GHz, RX-Mode according FCC §15.109 class B, RSS-Gen

Set-up No.:		1								
Operating Mode:		4								
Diagram no.	Frequency (MHz)	MaxPeak (dBµV/m)	Meas. Time (ms)	Bandwidth (kHz)	Antenna height (cm)	Polarity	Turntable position (deg)	Corr. (dB) (C_F)	Margin (dB) (M)	Limit (dBµV /m) (L_T)
I_2.11	1000.. 2800	49.13 (PK)	10	1000	155	H/V	0°..360°	--	>24.87	74.0 (PK)
		58.93 (AV)							>15.07	54.0 (AV)

Remark: 1.) diagrams shows PK/AV detector measurements
*.) see also plots enclosed in annex A1

Set-up No.:		1								
Operating Mode:		4								
Diagram no.	Frequency (MHz)	MaxPeak (dBµV/m)	Meas. Time (ms)	Bandwidth (kHz)	Antenna height (cm)	Polarity	Turntable position (deg)	Corr. (dB) (C_F)	Margin (dB) (M)	Limit (dBµV /m) (L_T)
I_2.12	2800-18000	34.47 (PK)	10.0	1000	155	H/V	0°..360°	--	>19.5	74.0 (PK)
		44.72 (AV)							>9.28	54.0 (AV)

Remark: 1.) diagrams shows PK/AV detector measurements
*.) see also plots enclosed in annex A1

Margin to Limit:

$$M = L_T - R_R + C_F + D_F$$
$$= L_T - R_R + \left(AF_{ANTENNA} + Cable_{LOSS}\right) + D_F$$

Remark: positive margin means passed result

Abbreviations used:

- R_R : Receiver readings in dBµV/m
- CF: Transducer in dB = AF (antenna factor) + CL (cable loss)
- D_F : distance correction factor (if different measurement distance used than specified in the standard
- L_T : Limit in dBµV/m

VERDICT

Summary of measurement results for radiated emissions above 1 GHz: Passed

5.5. 20-dB Bandwidth

TEST LOCATION AND EQUIPMENT (for reference numbers please see chapter 'List of test equipment')

test location	☒ CETECOM Essen (Chapter. 2.2.1)		☐ Please see Chapter. 2.2.2		☐ Please see Chapter. 2.2.3
test site	☐ 441 EMI SAR	☐ 487 SAR NSA	☐ 337 OATS	☒ 347 Radio.lab.	☐
receiver	☐ 377 ESCS30	☐ 001 ESS	☒ 489 ESU	☐	☐
otherwise	☒613 20dB Attenuator			☒ cable K5	

REFERENCES: §15.247(a)(1), RSS-210: A8.1(b)

(1) *Frequency hopping systems shall have hopping channel carrier frequencies separated by a minimum of 25 kHz or the 20 dB bandwidth of the hopping channel, whichever is greater. Alternatively, frequency hopping systems operating in the 2400-2483.5 MHz band may have hopping channel carrier frequencies that are separated by 25 kHz or two-thirds of the 20 dB bandwidth of the hopping channel, whichever is greater, provided the systems operate with an output power no greater than 125 mW.*

(2) *DSSS Systems using digital modulation techniques may operate in the 902-928 MHz, 2400-2483.5 MHz, and 5725-5850 MHz bands. The minimum 6 dB bandwidth shall be at least 500 kHz.*

EUT SETTINGS:

For FHHS-systems hopping mode was switched-off so fixed three different channels could be measured.
The EUT was instructed to send with maximum power (if adjustable) according applicants instructions.
Different modulation characteristics have been checked, e.g. data rates which EUT can operate.

MEASUREMENT METHOD:

The measurement was performed with the RBW set to 10kHz. The span was set to cover the complete carrier. Three carrier frequencies (low/middle/high) were used for showing the compliance with this requirement. A DELTA Marker method was set to measure the bandwidth compared to the highest In-Band power. The operating modes have been varied (e.g. data rate, modulation scheme, etc.). The hopping-mode is switched off.

Also the **99% emission bandwidth** was measured. Two markers are placed on frequency points such that left to lower f-marker and right to higher f-marker only 1% of the TX-power is contained. Between the markers, 99% of the power is laying.

SPECTRUM-ANALYZER SETTINGS:

Span	Set as to fully display the emissions and approximate 20dB below the PEAK level
Resolution Bandwidth (RBW)	Set to approx 1% of the emission width
Video Bandwidth (VBW)	3 times the resolution bandwidth
Sweep time	Coupled and low enough to have no gaps within power envelope
Detector	Sample (if bin width: Span/no. of frequency points SA < 0.5*RBW SA otherwise Peak detector)
Sweep mode	Repetitive Mode, MAX-HOLD

RESULTS:

20dB Bandwidth

The bandwidth 20dB as well as 99% was checked for different channel and modulations, full results in tabular format can be found in annex A1. Here only a extract can be found.

DH3&DH5 packet type (modulation)

Set-up no.: 2 Op. Mode: 1	**20 dB BANDWIDTH [kHz]**		
T_{NOM} =21°C, V_{NOM} = 4.1V	Low channel = 0 (2402 MHz)	Middle channel =39 (2441 MHz)	High channel = 78 (2480 MHz)
Maximum Value	926.282	926.282	926.282

Remark: see diagrams in separate document A1

2DH5 packet type (modulation)

Set-up no.: 2 Op. Mode: 1	**20 dB BANDWIDTH [kHz]**		
T_{NOM} =21°C, V_{NOM} = 4.1V	Low channel = 0 (2402 MHz)	Middle channel =39 (2441 MHz)	High channel = 78 (2480 MHz)
Maximum Value	1320.512	1217.948	1310.897

Remark: see diagrams in separate document A1

3DH3 packet type (modulation)

Set-up no.: 2 Op. Mode: 1	**20 dB BANDWIDTH [kHz]**		
T_{NOM} =21°C, V_{NOM} = 4.1V	Low channel = 0 (2402 MHz)	Middle channel =39 (2441 MHz)	High channel = 78 (2480 MHz)
Maximum Value	1291.666	1233.974	1262.820

Remark: see diagrams in separate document A1

99% bandwidth

The maximum results of 20dBc channels have been re-measured also for 99% bandwidth.

DH3 packet type (Modulation)

Set-up no.: 2 Op. Mode: 1	**99 dB BANDWIDTH [kHz]**		
T_{NOM} =21°C, V_{NOM} = 4.1V	Low channel = 0 (2402 MHz)	Middle channel =39 (2441 MHz)	High channel = 78 (2480 MHz)
Maximum Value	839.743	--	--

Remark: see diagrams in separate document A1

2DH5 packet type (Modulation)

Set-up no.: 2 Op. Mode: 1	**99% BANDWIDTH [kHz]**		
T_{NOM} =21°C, V_{NOM} = 4.1V	Low channel = 0 (2402 MHz)	Middle channel =39 (2441 MHz)	High channel = 78 (2480 MHz)
Maximum Value	1189.102	--	--

Remark: see diagrams in separate document A1

3DH3 packet type (Modulation)

Set-up no.: 2 Op. Mode: 1	**99% BANDWIDTH [kHz]**		
T_{NOM} =21°C, V_{NOM} = 4.1V	Low channel = 0 (2402 MHz)	Middle channel =39 (2441 MHz)	High channel = 78 (2480 MHz)
Maximum Value	1205.128	--	--

Remark: see diagrams in separate document A1

VERDICT: pass

5.6. Channel carrier frequency separation for FHHS-systems

TEST LOCATION AND EQUIPMENT (for reference numbers please see chapter 'List of test equipment')

test location	☒ CETECOM Essen (Chapter. 2.2.1)		☐ Please see Chapter. 2.2.2		☐ Please see Chapter. 2.2.3	
test site	☐ 441 EMI SAR	☐ 487 SAR NSA	☐ 337 OATS	☒ 347 Radio.lab.	☐	☐
receiver	☐ 377 ESCS30	☐ 001 ESS	☒ 489 ESU	☐	☐	☐
spectr. analys.	☐ 381 380 FSBS	☐ 120 FSEM	☐ 264 FSEK	☐	☐	☐
otherwise	☒613 20dB Attenuator			☒ cable K4		

REFERENCES: §15.247(a)(1), RSS-210:A8.1(b)

(1) *FHHS Frequency hopping systems shall have hopping channel carrier frequencies separated by a minimum of 25 kHz or the 20 dB bandwidth of the hopping channel, whichever is greater. Alternatively, frequency hopping systems operating in the 2400-2483.5 MHz band may have hopping channel carrier frequencies that are separated by 25 kHz or two-thirds of the 20 dB bandwidth of the hopping channel, whichever is greater, provided the systems operate with an output power no greater than 125 mW.*

(2) *DSSS Systems using digital modulation techniques may operate in the 902-928 MHz, 2400-2483.5 MHz, and 5725-5850 MHz bands. The minimum 6 dB bandwidth shall be at least 500 kHz.*

MEASUREMENT METHOD

The measurement to prove this requirement was performed with a low RBW of 100kHz, peak detector and trace Hold-Max function in order to resolve each frequency carrier separately.

The span of the frequency analyzer was set to cover the carrier investigated as well as its neighbour channels. A frequency DELTA Marker method was set to measure the frequency separation between the channels.

RESULTS

Set-up No. 2 Op. Mode 2	**CHANNEL SEPARATION**
T_{NOM} =21°C, V_{NOM} =4.1V	Measured around middle channel (2441 MHz)
Measured Result valid for DH3, 2DH3 and 3DH5	1 MHz
Applicants declared value	1 MHz according BT-core spec.

Remark: see diagrams enclosed in annex A1 for different packet types/modulations

LIMIT

Either:

1. 25 kHz or 20dB BW

Or

2. 25kHz and 2/3of BW if Power<125mW

VERDICT: pass

5.7. Requirements on channel use, average channel use, input bandwidth and synchronization between signals for FHHS-systems

REQUIREMENT:
The system shall hop to channel frequencies that are selected at the system hopping rate from a pseudo randomly ordered list of hopping frequencies.

RESULT:
The above requirement is implemented in the firmware of the device. Please find applicants separate declaration for detailed information. (document not supplied herewith)

REQUIREMENT:
Each frequency must be used equally on the average by each transmitter.

RESULT:
The above requirement is implemented in the firmware of the device. Please find applicants separate declaration for detailed information. (document not supplied herewith)

REQUIREMENT:
The system receivers shall have input bandwidths that match the hopping channel bandwidths of their corresponding transmitters and ..

RESULT:
Please find applicants separate declaration for detailed information. (document not supplied herewith)

REQUIREMENT:
The system receivers shall shift frequencies in synchronization with the transmitted signals.

RESULT:
The synchronization requirement is implemented in the firmware of the device – Please find applicants separate declaration for detailed information. (document not supplied herewith)

5.8. Specification for hopping channel numbers and time of occupancy for FHHS-systems

5.8.1. Test location and equipment (for reference numbers please see chapter 'List of test equipment')

test location	☒ CETECOM Essen (Chapter. 2.2.1)		☐ Please see Chapter. 2.2.2		☐ Please see Chapter. 2.2.3	
test site	☐ 441 EMI SAR	☐ 487 SAR NSA	☐ 337 OATS	☒ 347 Radio.lab.	☐	☐
receiver	☐ 377 ESCS30	☐ 001 ESS	☒ 489 ESU	☐	☐	☐
spectr. analys.	☐ 489 ESU	☐ 120 FSEM	☐ 264 FSEK	☐ 489 ESU	☐	☐
power supply	☐ 456 EA 3013A	☐ 457 EA 3013A	☐ 459 EA 2032-50	☐ 268 EA- 3050	☐ 494 AG6632A	☐ 498 NGPE 40
otherwise	☒613 20dB Attenuator			☒ cable K4		

REFERENCE: §15.247(A)(1)(III) AND RSS-210, A8.1(d)

Frequency hopping systems in the 2400-2483.5 MHz band shall use at least 15 channels. The average time of occupancy on any channel shall not be greater than 0.4 seconds within a period of 0.4 seconds multiplied by the number of hopping channels employed. Frequency hopping systems may avoid or suppress transmissions on a particular hopping frequency provided that a minimum of 15 channels are used.

METHOD FOR MEASUREMENT OF THE CHANNEL NUMBERS:

The measurement was performed with spectrum analyzer's RBW set to 500kHz. The device was set to work within the defined specification with frequency hopping mode set on. The spectrum-analyzer was set to MAX-Hold positive peak detector mode. After a trace stabilization period the trace is recorded and the number of channels counted.

RESULTS

SET-UP NO. 2 OP. MODE 2	**NUMBER OF CHANNELS**
T_{NOM} =21°C V_{NOM} = 4.1 V	79

Remark: see diagrams enclosed in the separate annex A1, for better accuracy reading the sweep was splitted in two separated sweeps.

METHOD FOR MEASURING THE OCCUPANCY TIME:
The measurement was performed with a spectrum analyzer set to ZERO span. The device was set to work within the defined specification with frequency hopping mode on. The spectrum-analyzer was set the MAX-Hold positive peak detector mode. The sweep time set as long as necessary to capture the full signal burst per hopping channel. The burst on-period is captured by setting appropriate markers in the rising and falling edges.

RESULTS

SET-UP NO. 2 OP. MODE 2	**OCCUPANCY TIME PER TRANSMISSION** [ms]		
	DH1 modulation	2DH3 modulation	3DH5 modulation
T_{NOM} =21°C, V_{NOM} = 4.1V	0.36858	1.5865	2.8685

Remarks: diagrams can be found in seprate annex A1

Calculations:
Formula for calculating the dwell time (pseudo-hopping sequence over all channels assumed):

Average Dwell Time: $Timeslot\ length \cdot \frac{Hop\ rate}{number of\ hopping channels} \cdot time\ period$

For Bluetooth® following is valid:

The maximum staying time of 0.4 seconds within a 31.6 second period in data mode is constant for Bluetooth® devices and independent from the packet type. For longer packet types the hopping data rate is reduced according the packet type length in order to comply with this requirement.

DH1/2DH1/3DH1 Paket type: Hop rate 1600 1/s (basic hop rate)
DH3/2DH3/3DH3 Packet type: Hop rate 1600 1/s /3 = approx. 533.33 1/s
DH5/2DH5/3DH5 Paket type: Hop rate 1600 1/s /5 = approx. 320 1/s

On one channel **per one second**:

DH1/2DH1/3DH1 Paket types: 1600 1/s /79 channels: 20.25 transmissions; per 31.6 seconds period = approx 640 transmissions

DH3/2DH3/3DH3 Packet types: 533.33 1/s /79 channels: 6.75 transmissions; per 31.6 seconds period = approx. 214 transmissions

DH5/2DH5/3DH5 Paket types: 320 1/s /79 channels: 4.05 transmissions; per 31.6seconds period = approx. 128 transmissions

Measured pulse width for **different** packet types/modulations (see annex A1 for diagrams):

DH1/DH3/DH5: 368.58 us – total time per 31.6 seconds period => 368.58us*640 transmissions=235.89 ms
DH3/2DH3/3DH3: 1.5865ms - total time per 31.6seconds period => 1.5865ms*214 transmissions=339.51 ms
DH5/2DH5/3DH5: 2.8685ms –total time per 31.6 seconds period=> 2.8685 ms * 128 transmissions = 367.16 ms

VERDICT: Pass < 400 msec.

5.9. Power specification

TEST LOCATION AND EQUIPMENT (for reference numbers please see chapter 'List of test equipment')

test location	☒ CETECOM Essen (Chapter. 2.2.1)		☒ 443 System CTC-FAR-EMI-		☐ Please see Chapter. 2.2.3	
test site	☐ 441 EMI SAR	☐ 487 SAR NSA	☐ 337 OATS	☒ 347 Radio.lab.	☐	☐
receiver	☐ 377 ESCS30	☐ 001 ESS	☒ 489 ESU	☐	☐	☐
spectr. analys.	☐ 489 ESU	☐ 120 FSEM	☐ 264 FSEK	☐	☐	☐
power supply	☐ 456 EA 3013A	☐ 457 EA 3013A	☐ 459 EA 2032-50	☐ 268 EA- 3050	☐ 494 AG6632A	☐ 498 NGPE 40
otherwise	☒613 20dB Attenuator			☒ cable K15		

REFERENCE: §15.247(B)(1) AND RSS-210: A8.4 (2)

The maximum peak conducted output power of the intentional radiator shall not exceed the following:
(1) For frequency hopping systems (FHHS) operating in the 2400-2483.5 MHz band employing at least 75 non-overlapping hopping channels, and all frequency hopping systems in the 5725-5850 MHz band: 1 watt. For all other frequency hopping systems in the 2400-2483.5 MHz band: 0.125 watts.
(2) For frequency hopping systems operating in the 902-928 MHz band: 1 watt for systems employing at least 50 hopping channels; and, 0.25 watts for systems employing less than 50 hopping channels, but at least 25 hopping channels, as permitted under paragraph (a)(1)(i) of this section.
(3) For systems using digital modulation (DSSS) in the 902-928 MHz, 2400-2483.5 MHz, and 5725-5850 MHz bands: 1 Watt. As an alternative to a peak power measurement, compliance with the one Watt limit can be based on a measurement of the maximum conducted output power. Maximum Conducted Output Power is defined as the total transmit power delivered to all antennas and antenna elements averaged across all symbols in the signalling alphabet when the transmitter is operating at its maximum power control level. Power must be summed across all antennas and antenna elements. The average must not include any time intervals during which the transmitter is off or is transmitting at a reduced power level. If multiple modes of operation are possible (e.g., alternative modulation methods), the maximum conducted output power is the highest total transmit power occurring in any mode.
(4) The conducted output power limit specified in paragraph (b) of this section is based on the use of antennas with directional gains that do not exceed 6 dBi. Except as shown in paragraph (c) of this section, if transmitting antennas of directional gain greater than 6 dBi are used, the conducted output power from the intentional radiator shall be reduced below the stated values in paragraphs (b)(1), (b)(2), and (b)(3) of this section, as appropriate, by the amount in dB that the directional gain of the antenna exceeds 6 dBi.

ANTENNA CHARACTERISTICS:

☒ Directional Gain < 6 dBi (measured: difference between measured conducted and radiated eirp. power)
☐ Directional Gain > 6 dBi (measured / applicant's declaration) -> conducted power reduction necessary

EUT SETTINGS:

For FHHS-systems hopping mode was switched-off so fixed three different channels could be measured.
The EUT was instructed to send with maximum power (if adjustable) according applicants instructions.
Different modulation characteristics have been checked, e.g. data rates which EUT can operate.

MEASUREMENT METHOD:

The measurement was performed in non-hopping transmission mode with the carrier set to lowest/middle and highest channel. The power was also checked for different data rates, modulation scheme or packet types if applicable.

SETTINGS ON SPECTRUM-ANALYZER:

Center Frequency	Nominal channel frequency
Span	8 MHz
Resolution Bandwidth (RBW)	3 MHz > 20dB-Bandwidth of the signal
Video Bandwidth (VBW)	3 times the resolution bandwidth = 10MHz
Sweep time	coupled
Detector	Peak, Max hold mode
Sweep Mode	Repetitive mode

5.9.1. **CONDUCTED MEASUREMENT: MAX. PEAK POWER**

- Maximum declared antenna gain [isotropical]: -0.5dBi
- power was checked for different channel and modulations, full results in tabular format can be found in annex A1

RESULTS

MAX PEAK POWER (conducted)			
Set-up no.: 2 Op-Mode: 1	Low channel = 0 (2402 MHz)	Middle channel = 39 (2441 MHz)	High channel = 78 (2480 MHz)
Measured Peak power [dBm]	9.65 dBm (3DH1/3DH5)	1.)	1.)
Limit	0.125 Watt (21dBm)		

Remark: 1.) here only the maximum power value is reported, see separate separate document A1 for full results

VERDICT: passed

5.9.2. RADIATED MEASUREMENT: MAX. E.I.R.P POWER

Test location and equipment (for reference numbers please see chapter 'List of test equipment')

test site	☐ 441 EMI SAR	☐ 348 EMI cond.	☒ 443 EMI FAR	☐ 347 Radio.lab.	☐ 337 OATS	☐
equipment	☐ 331 HC 4055	☐	☐	☐	☐	☐
Spectr. analys.	☐ 489 ESU	☐ 120 FSEM	☐ 264 FSEK	☒ 489 ESU	☐	☐
antenna meas	☒ 549 HL025	☐ 289 CBL 6141	☐ 439 HL 562	☐ 133 EMCO3115	☐ 302 BBHA9170	☐ 477 GPS
antenna subst	☐ 071 HUF-Z2	☐ 020 EMCO3115	☐ 063 LP 3146	☐ 303 BBHA9170	☐	☐
power meter	☐ 009 NRV	☐ 010 URV5-Z2	☐ 011 URV5-Z2	☐	☐	☐
Signalgener.	☐ 008 SMG	☐ 140 SMHU	☐ 263 SMP04	☐	☐	☐
power meter	☐ 262 NRV-S	☐ 266 NRV-Z31	☐ 265 NRV-Z33	☐ 261 NRV-Z55	☐ 356 NRV-Z1	☐
DCpower	☐ 086 LNG50-10	☐ 087 EA3013	☐ 354 NGPE 40	☐ 349 car battery	☐ 350 Car battery	☐

EUT SETTINGS:
For FHHS-systems hopping mode was switched-off so fixed three different channels could be measured.
The EUT was instructed to send with maximum power (if adjustable) according applicants instructions.
Different modulation characteristics have been checked, e.g. data rates which EUT can operate.

Measurement method: a field strength measurement was performed in 3m distance to the EUT. General measurement procedures as shown in chapter 5.3 applies therefore. Using transformation formula between field strength and e.i.r.p. power as shown in ANSI63.10: 2009, chapter 7.8.2 is used for conversion. In addition a bandwidth correction factor applied: 10*log(6dB BW/RBW=1MHz)

MAX. FIELD STRENGTH MEASURED IN 3m DISTANCE

3DH3-MODULATION

Maximum Radiated field strength@3m distance			
Set-up no.: 1 Op. Mode: 1	Low channel = 0 (2402 MHz)	Middle channel = 39 (2441 MHz)	High channel = 78 (2480 MHz)
Determined field strength [dBuV/m] in 3m distance with RBW=1MHz	99.02 (PK) 92.48 (AV)	101.55 (PK) 95.32 (AV)	99.61 (PK) 93.44 (AV)
Value in dBm using conversion formula and assumed numeric Gain=1: $E=\sqrt{\left(\frac{30*P*G}{d^2}\right)}$	3.79 dBm (2.39mW) (PK)	6.32 dBm (4.28mW) (PK)	4.38 dBm (2.74mW) (PK)
Bandwidth correction factor[1.)]	1.109	0.909	1.01
e.i.r.p. power [dBm] assumed 0dBi gain	4.899	7.230	5.391
Actual declared gain of antenna by applicant [dBi]	-0.5		
Final Result e.i.r.p. [dBm]:	4.399	**6.730**	4.891

Remark: 1.) see 20dB BW results before

2DH5-MODULATION

Maximum Radiated field strength@3m distance			
Set-up no.: 1 Op. Mode: 1	Low channel = 0 (2402 MHz)	Middle channel = 39 (2441 MHz)	High channel = 78 (2480 MHz)
Determined field strength [dBuV/m] in 3m distance with RBW=1MHz	99.79 (PK) 94.10 (AV)	99.54 (PK) 93.90 (AV)	99.38 (PK) 93.83 (AV)
Value in dBm using conversion formula and assumed numeric Gain=1: $E=\sqrt{\left(\frac{30*P*G}{d^2}\right)}$	4.56 dBm (2.85mW) (PK)	4.31 dBm (2.69 mW) (PK)	4.15 dBm (2.6mW) (PK)
Bandwidth correction factor[1.)]	1.205	0.852	1.17
e.i.r.p. power [dBm] assumed 0dBi gain	5.766	5.163	5.321
Actual declared gain of antenna by applicant [dBi]	-0.5		
Final Result e.i.r.p. [dBm]:	**5.26**	4.66	4.82

Remark: 1.) see 20dB BW results before

DH1-MODULATION

Maximum Radiated field strength@3m distance			
Set-up no.: 1 Op. Mode: 1	Low channel = 0 (2402 MHz)	Middle channel = 39 (2441 MHz)	High channel = 78 (2480 MHz)
Determined field strength [dBuV/m] in 3m distance with RBW=1MHz	101.19 (PK) 90.63 (AV)	101.08 (PK) 90.50 (AV)	100.36 (PK) 89.78 (AV)
Value in dBm using conversion formula and assumed numeric Gain=1: $E=\sqrt{\left(\frac{30*P*G}{d^2}\right)}$	5.95 dBm (3.94mW) (PK)	5.85 dBm (3.84mW) (PK)	5.13 dBm (3.25mW) (PK)
Bandwidth correction factor[1.)]	0	0	0
e.i.r.p. power [dBm] assumed 0dBi gain	5.95	5.85	5.13
Actual declared gain of antenna by applicant [dBi]	-0.5		
Final Result e.i.r.p. [dBm]:	**5.45**	5.35	4.63

Remark: 1.) see 20dB BW results before, 20dB BW < RBW_{MEAS} =1MHz-> no correction applies

VERDICT: pass, Maximum value: 6.73 dBm radiated (antenna gain < 6 dBi)

5.10. 20dBc Emission specification

TEST LOCATION AND EQUIPMENT (for reference numbers please see chapter 'List of test equipment')

test location	☒ CETECOM Essen (Chapter. 2.2.1)		☐ Please see Chapter. 2.2.2		☐ Please see Chapter. 2.2.3	
test site	☐ 441 EMI SAR	☐ 487 SAR NSA	☐ 337 OATS	☒ 347 Radio.lab.	☐	☐
receiver	☐ 377 ESCS30	☐ 001 ESS	☒ 489 ESU	☐	☐	☐
spectr. analys.	☐ 489 ESU	☐ 120 FSEM	☐ 264 FSEK	☐	☐	☐
power supply	☐ 456 EA 3013A	☐ 457 EA 3013A	☐ 459 EA 2032-50	☐ 268 EA- 3050	☐ 494 AG6632A	☐ 498 NGPE 40
otherwise	☒613 20dB Attenuator			☒ cable K4		

REFERENCES: §15.247, §15.205, RSS-210: A8.5

(d) *In any 100 kHz bandwidth outside the frequency band in which the spread spectrum or digitally modulated intentional radiator is operating, the radio frequency power that is produced by the intentional radiator shall be at least 20 dB below that in the 100 kHz bandwidth within the band that contains the highest level of the desired power, based on either an RF conducted or a radiated measurement, provided the transmitter demonstrates compliance with the peak conducted power limits.*

EUT SETTINGS:

For FHHS-systems hopping mode was switched-off so fixed three different channels could be measured.
The EUT was instructed to send with maximum power (if adjustable) according applicants instructions.

MEASUREMENT METHOD:

The frequency spectrum was investigated for **conducted** spurious emissions values lower than 20dB related to the RF-carrier power value. Three carrier frequencies (low/middle/high channel) were used for showing the compliance with this requirement. The detector were chosen according §15.209(d). The video bandwidth (VBW) was chosen 10 times the resolution bandwidth (RBW). The frequency scan was up to 10 times the highest channel frequency within the operational mode. The spectrum-analyzer was set to MAX-PEAK Detector, MAX-Hold Mode.

For FHHS-systems hopping mode was switched-off so fixed three different channels could be measured.
The EUT was instructed to send with maximum power (if adjustable) according applicants instructions.

DH1-Modulation

Set-up no.: 2 Op. Mode: 1+2	**RF-CONDUCTED TEST: 20 dBc SPURIOUS EMISSIONS**					
Frequency Range	Low channel =0 (2402 MHz) Level Reference (In-Band) = 115.28 dBµV /m Limit = 95.28 dBµV /m		Middle channel = 39 (2441 MHz) Level Reference (In-Band) = 114.40 dBµV /m Limit = 94.40 dBµV /m		High channel = 78 (2480 MHz) Level Reference (In-Band) = 114.78 dBµV /m Limit = 94.78 dBµV /m	
	Frequency [MHz]	Value [dBc]	Frequency [MHz]	Value [dBc]	Frequency [MHz]	Value [dBc]
30 .. 1000 MHz	Peaks from set-up (AE-equipment)	> 55.73	Peaks from set-up (AE-equipment)	> 57.41	Peaks from set-up (AE-equipment)	> 58.57
1 GHz .. 2.8 GHz	2387.5	> 50.87	2387.5	> 47.92	2387.5	> 47.47
2.8GHz ..18 GHz	No peaks found	> 51.72	No peaks found	>50.28	No peaks found	> 50.78
18..25GHz	Only radiated overview measurements, noise floor, no relevant peaks found					
Band-Edge (no hopping)	--	53.08	--		--	53.46
Band-Edge (Hopping mode)	--	56.73	--		--	53.67

Remark: see diagrams in separate document A1

The limit on the diagrams is 20dB under the reference level measured In-Band for each channel

2DH3-Modulation

Set-up no.: 2 Op. Mode: 1+2	**RF-CONDUCTED TEST: 20 dBc SPURIOUS EMISSIONS**					
Frequency Range	Low channel =0 (2402 MHz) Level Reference (In-Band) = 113.60 dBµV /m Limit= 93.60 dBµV /m		Middle channel = 39 (2441 MHz) Level Reference (In-Band) = 112.10 dBµV /m Limit= 92.10 dBµV /m		High channel = 78 (2480 MHz) Level Reference (In-Band) = 112.96 dBµV /m Limit= 92.96 dBµV /m	
	Frequency [MHz]	Value [dBc]	Frequency [MHz]	Value [dBc]	Frequency [MHz]	Value [dBc]
30 .. 1000 MHz	Peaks from set-up (AE-equipment)	> 56.98	Peaks from set-up (AE-equipment)	> 55.41	Peaks from set-up (AE-equipment)	> 56.09
1 GHz .. 2.8 GHz	2384.6	45.31	2384.6	44.23	2384.6	45.93
2.8GHz ..18 GHz	No peaks found	> 49.82	No peaks found	> 48.28	No peaks found	>49.41
18..25GHz	Only radiated overview measurements, noise floor, no relevant peaks found					
Band-Edge (no hopping)	--	> 39.12	--		--	49.89
Band-Edge (Hopping mode)	--	> 42.21	--		--	49.26

Remark: see diagrams in separate document A1

The limit on the diagrams is 20dB under the reference level measured In-Band for each channel

3DH1-Modulation

Set-up no.: 2 Op. Mode: 1+2	**RF-CONDUCTED TEST: 20 dBc SPURIOUS EMISSIONS**					
Frequency Range	Low channel =0 (2402 MHz) Level Reference (In-Band) = 113.76 dBµV /m Limit= 93.76 dBµV /m		Middle channel = 39 (2441 MHz) Level Reference (In-Band) = 112.14 dBµV /m Limit= 92.14 dBµV /m		High channel = 78 (2480 MHz) Level Reference (In-Band) = 113.06 dBµV /m Limit= 93.06 dBµV /m	
	Frequency [MHz]	Value [dBc]	Frequency [MHz]	Value [dBc]	Frequency [MHz]	Value [dBc]
30 .. 1000 MHz	Peaks from set-up (AE-equipment)	> 56.74	Peaks from set-up (AE-equipment)	> 56.08	Peaks from set-up (AE-equipment)	>56.34
1 GHz .. 2.8 GHz	2384.61	44.93	2384.61	43.79	2384.61	45.07
2.8GHz ..18 GHz	14297.43	> 49.65	No peaks found	>47.89	No peaks found	> 49.45
18..25GHz	Only radiated overview measurements, noise floor, no relevant peaks found					
Band-Edge (no hopping)	--	> 40.04	--		--	49.35
Band-Edge (Hopping mode)	--	> 40.06	--		--	> 36.69

Remark: see diagrams in separate document A1

The limit on the diagrams is 20dB under the reference level measured In-Band for each channel

VERDICT: pass

5.11. Radiated Band-Edge compliance measurements

TEST LOCATION AND EQUIPMENT (for reference numbers please see chapter 'List of test equipment')

test location	☒ CETECOM Essen (Chapter. 2.2.1)		☒ 443 System CTC-FAR-EMI-		☐ Please see Chapter. 2.2.3	
test site	☐ 441 EMI SAR	☐ 487 SAR NSA	☐ 337 OATS	☐ 347 Radio.lab.	☐	☐
receiver	☐ 377 ESCS30	☐ 001 ESS	☒ 489 ESU	☐	☐	☐
spectr. analys.	☒ 489 ESU	☐ 120 FSEM	☐ 264 FSEK	☐	☐	☐
power supply	☐ 456 EA 3013A	☐ 457 EA 3013A	☐ 459 EA 2032-50	☐ 268 EA- 3050	☐ 494 AG6632A	☐ 498 NGPE 40
otherwise	☒ 371 CBT32					

MEASUREMENT METHOD:
A Delta marker method was used for showing compliance to restricted bands according §15.205. The method is according Public Notice "Marker-Delta method", Extract from DA00-705. The method consists of three independent steps:

1. Step: Prior to the measurement the fundamental radiated In-Band field strength was performed. The determined value is used as reference value.
2. Step: Second step consist of finding the relative attenuation between the fundamental emission and the maximum local out-of-band emission (within 2 MHz range around the band edge either on the band-edge directly or some modulation product if the level is greater than that on the band-edge) when measured with lower resolution bandwidth.
3. Step: The delta value recorded in step 2 will be subtracted from value recorded in step 1, thus giving the required field strength at the band-edge. This value must fulfil the requirements for radiated spurious emissions in restricted bands in §15.205 with the general limits of §15.209.

EUT SETTINGS:
A fully loaded battery was used and changed if required in order to keep the voltage constant over the test time.

RESULTS

3DH5 data packet/modulation

Set-up: 1 Op. Mode: 1				
T_{NOM} = 21°C, V_{NOM} = 4.1V	Fundamental field strength-radiated [dBµV/m]	Delta Marker Value [dB]	Value at Band-Edge [dBµV/m]	Verdict
Channel Low	99.02 (PK) 92.48 (AV)	44.91	54.11 (PK) 47.57 (AV)	Passed
Channel High	99.61 (PK) 93.44 (AV)	51.79	47.82 (PK) 41.65 (AV)	Passed

2DH5 data packet/modulation

Set-up: 3 Op. Mode: 1				
T_{NOM} = 21°C, V_{NOM} = 4.1V	Fundamental field strength-radiated [dBµV/m]	Delta Marker Value [dB]	Value at Band-Edge [dBµV/m]	Verdict
Channel Low	99.79 (PK) 94.10 (AV)	44.65	55.14 (PK) 49.45 (AV)	Passed
Channel High	99.38 (PK) 93.83 (AV)	52.23	47.15 (PK) 41.60 (AV)	Passed

DH1 data packet/modulation

Set-up: 1 Op. Mode: 1				
T_{NOM} = 21°C, V_{NOM} = 4.1V	Fundamental field strength-radiated [dBµV/m]	Delta Marker Value [dB]	Value at Band-Edge [dBµV/m]	Verdict
Channel Low	101.19 (PK) 90.63 (AV)	53.83	47.36 (PK) 36.83 (AV)	Passed
Channel High	100.36 (PK) 89.78 (AV)	55.2	45.16 (PK) 34.58 (AV)	Passed

VERDICT: pass

5.12. Measurement uncertainties

The reported uncertainties are calculated based on the standard uncertainty multiplied with the appropriate coverage factor **k**, such that a confidence level of approximately 95% is achieved.

For uncertainty determination, each component used in the concrete measurement set-up was taken in account and it's contribution to the overall uncertainty according it's statistical distribution calculated.

Following table shows expectable uncertainties for each measurement type performed.

Measurement	Frequency range	Calculated uncertainty based on a confidence level of 95%	Remarks:
RF-Power Output conducted	9 kHz .. 20 GHz	1.0 dB	--
RF-Power Output radiated	30 MHz .. 4 GHz	3.17 dB	Substitution method
Conducted RF-emissions on antenna ports	9 kHz .. 20 GHz	1.0 dB	--
Radiated RF-emissions enclosure	150 kHz .. 30 MHz	5.0 dB	Magnetic field
	30 MHz .. 1 GHz	4.2 dB	E-Field
	1 GHz .. 18GHz	4.8 dB	E-Field
	1 GHz .. 20 GHz	3.17 dB	Substitution method
Occupied bandwidth	9 kHz .. 4 GHz	0.1272 ppm (Delta Marker method)	Frequency error
		1 dB	Power
Emission bandwidth	9 kHz .. 4 GHz	0.1272 ppm (Delta Marker method)	Frequency error
		1 dB	Power
Frequency stability	9 kHz .. 20 GHz	0.0636 ppm	--
Conducted emissions on AC-mains port (U_{CISPR})	9 kHz .. 150 kHz	4.0 dB	--
	150 kHz .. 30 MHz	3.6 dB	

Table : measurement uncertainties, valid for conducted/radiated measurements

6. Instruments and Ancillary

6.1. Used equipment "CTC"

The "Ref.-No" in the left column of the following tables allows the clear identification of the laboratory equipment.

6.1.1. Test software and firmware of equipment

Ref.-No.	Equipment	Type	Serial-No.	Version of Firmware or Software during the test
001	Emi Test Receiver	ESS	825132/017	Firm.= 1.21 , OTP=2.0, GRA=2.0
012	Signal Generator (EMS-cond.)	SMY 01	839069/027	Firm.= V 2.02
013	Power Meter (EMS cond.)	NRVD	839111/003	Firm.= V 1.51
017	Digital Radiocommunication Tester	CMD 60 M	844365/014	Firmware = V 3.52 .22.01.99, DECT = D2.87 13.01.99
053	Audio Analyzer	UPA3	860612/022	Firm. V 4.3
119	RT Harmonics Analyzer dig. Flickermeter	B10	G60547	Firm.= V 3.1DHG
140	Signal Generator	SMHU	831314/006	Firm.= 3.21
261	Thermal Power Sensor	NRV-Z55	825083/0008	EPROM-Datum 02.12.04, SE EE 1 B
262	Power Meter	NRV-S	825770/0010	Firm.= 2.6
263	Signal Generator	SMP 04	826190/0007	Firm.=3.21
264	Spectrum Analyzer	FSEK 30	826939/005	Bios=2.1, Analyzer= 3.20
295	Racal Digital Radio Test Set	6103	1572	UNIT Firmware= 4.04, SW-Main=4.04, SW-BBP=1.04, SW-DSP=1.02, Hardboot=1.02, Softboot=2.02
298	Univ. Radio Communication Tester	CMU 200	832221/091	R&S Test Firmware =3.53 /3.54 (current Testsoftw. f. all band used
323	Digital Radiocommunication Tester	CMD 55	825878/0034	Firm.= 3.52 .22.01.99
331	Climatic Test Chamber -40/+80 Grad	HC 4055	43146	TSI 1.53
335	System-CTC-EMS-Conducted	System EMS Conducted	-	EMC 32 V 8.40
340	Digital Radiocommunication Tester	CMD 55	849709/037	Firm.= 3.52 .22.01.99
355	Power Meter	URV 5	891310/027	Firm.= 1.31
365	10V Insertion Unit 50 Ohm	URV5-Z2	100880	Eprom Data = 31.03.08
366	Ultra Compact Simulator	UCS 500 M4	V0531100594	Firm. UCS 500=001925/3.06a02, rc=ISMIEC 4.10
371	Bluetooth Tester	CBT32	100153	CBT V5,30+ SW-Option K55
377	Emi Test Receiver	ESCS 30	100160	Firm.= 2.30, OTP= 02.01, GRA= 02.36
378	Broadband RF Field Monitor	RadiSense III	03D00013SNO-08	Firm.= V.03D13
383	Signal Generator	SME 03	842 828 /034	Firm.= 4.61
389	Digital Multimeter	Keithley 2000	0583926	Firm. = A13 (Mainboard) A02 (Display)
392	Radio Communication Tester	MT8820A	6K00000788	Firm.= 4.50 #005, IPL=4.01#001,OS=4.02#001, GSM=4.41#013, W-CDMA= 4.54#004, scenario= 4.52#002
441	CTC-SAR-EMI Cable Loss	System EMI field (SAR) Cable	-	EMC 32 Version 8.40
442	CTC-SAR-EMS	System EMS field (SAR)	-	EMC 32 Version 8.40
443	CTC-FAR-EMI-RSE	System CTC-FAR-EMI-RSE	-	Spuri 7.2.5 or EMC 32 Ver. 8.40
444	CTC-FAR-EMS field	System-EMS-Field (FAR)	-	EMC 32 Version 8.40
460	Univ. Radio Communication Tester	CMU 200	108901	R&S Test Firmware Base=5.14, GSM=5.14 WCDMA=5.14 (current Testsoftw.,f. all band to be used,
489	Emi Test Receiver	ESU40	1000-30	Firmware=4.43 SP3, Bios=V5.1-16-3, Spec. =01.00
491	ESD Simulator dito	ESD dito	dito307022	V 2.30
524	Voltage Drop Simulator	VDS 200	0196-16	Software Nr: 000037 Version V4.20a01
526	Burst Generator	EFT 200 A	0496-06	Software Nr. 000034 Version V2.32
527	Micro Pulse Generator	MPG 200 B	0496-05	Software-Nr. 000030 Version V2.43
528	Load Dump Simulator	LD 200B	0496-06	Software-Nr. 000031 Version V2.35a01
546	Univ. Radio Communication Tester	CMU 200	106436	R&S Test Firmware Base=5.14, GSM=5.14 WCDMA=5.14 (current Testsoftw.,f. all band to be used
547	Univ. Radio Communication Tester	CMU 200	835390/014	R&S Test Firmware Base=V5.1403 (current Testsoftw., f. all band used, GSM = 5.14 WCDMA: = 5.14
584	Spectrum Analyzer	FSU 8	100248	2.82_SP3
594	Univ. Radio Communication Tester	CMW500	101757	Firmware Base=2.0.20.9, LTE=2.0.20.8. CDMA= 2.0.10
597	Univ. Radio Communication Tester	CMU 200	100347	R&S Test Firmware Base=5.01, GSM=5.02 WCDMA= not installed, Mainboard= µP1=V.850
598	Spectrum Analyzer	FSEM 30 (Reserve)	831259/013	Firmware Bios 3.40 , Analyzer 3.40 Sp 2

6.1.2. Single instruments and test systems

Ref.-No.	Equipment	Type	Serial-No.	Manufacturer	Interval of calibration	Remark	Cal due
001	Emi Test Receiver	ESS	825132/017	Rohde & Schwarz	12 M	-	31.03.2012
005	AC - LISN (50 Ohm/50µH, test site 1)	ESH2-Z5	861741/005	Rohde & Schwarz	24/12 M	-	31.03.2012
007	DC - LISN (50 Ohm/5µH)	ESH3-Z6	892563/002	Rohde & Schwarz	24/12 M	-	31.03.2012
009	Power Meter (EMS-radiated)	NRV	863056/017	Rohde & Schwarz	24 M	-	31.03.2013
016	Line Impedance Simulating Network	Op. 24-D	B6366	Spitzenberger+Spies	36 M	-	31.03.2013
020	Horn Antenna 18 GHz (Subst 1)	3115	9107-3699	EMCO	36/12 M	-	31.03.2013
021	Loop Antenna (H-Field)	6502	9206-2770	EMCO	36 M	-	31.03.2013
030	Loop Antenna (H-field)	HFH-Z2	879604/026	Rohde & Schwarz	36 M	-	31.03.2012
033	RF-current probe (100kHz-30MHz)	ESH2-Z1	879581/18	Rohde & Schwarz	24 M	-	31.03.2013
057	relay-switch-unit (EMS system)	RSU	494440/002	Rohde & Schwarz	pre-m	1a	
060	power amplifier (DC-2kHz)	PAS 5000	B6363	Spitzenberger+Spies	-	3	
066	notch filter (WCDMA; FDD1)	WRCT 1900/2200-5/40-10EEK	5	Wainwright GmbH	12 M	1c	30.06.2012
086	DC - power supply, 0 -10 A	LNG 50-10	-	Heinzinger Electronic	pre-m	2	
087	DC - power supply, 0 -5 A	EA-3013 S	-	Elektro Automatik	pre-m	2	
090	Helmholtz coil: 2x10 coils in series	-	-	RWTÜV	-	4	
091	USB-LWL-Converter	OLS-1	007/2006	Ing. Büro Scheiba	-	4	
099	passive voltage probe	ESH2-Z3	299.7810.52	Rohde & Schwarz	36 M	-	31.03.2012
100	passive voltage probe	Probe TK 9416	without	Schwarzbeck	36 M	-	31.03.2012
110	USB-LWL-Converter	OLS-1	-	Ing. Büro Scheiba	-	4	
119	RT Harmonics Analyzer dig. Flickermeter	B10	G60547	BOCONSULT	36 M	-	31.03.2013
134	horn antenna 18 GHz (Subst 2)	3115	9005-3414	EMCO	12 M	-	31.03.2012
136	adjustable dipole antenna (Dipole 1)	3121C-DB4	9105-0697	EMCO	12 M	-	31.03.2012
140	Signal Generator	SMHU	831314/006	Rohde & Schwarz	24 M	-	31.03.2012
248	attenuator	SMA 6dB 2W	-	Radiall	pre-m	2	
249	attenuator	SMA 10dB 10W	-	Radiall	pre-m	2	
252	attenuator	N 6dB 12W	-	Radiall	pre-m	2	
256	attenuator	SMA 3dB 2W	-	Radiall	pre-m	2	
257	hybrid	4031C	04491	Narda	pre-m	2	
260	hybrid coupler	4032C	11342	Narda	pre-m	2	
261	Thermal Power Sensor	NRV-Z55	825083/0008	Rohde & Schwarz	24/12 M	-	31.03.2012
262	Power Meter	NRV-S	825770/0010	Rohde & Schwarz	24 M	-	31.03.2012
263	Signal Generator	SMP 04	826190/0007	Rohde & Schwarz	36 M	-	31.03.2013
264	Spectrum Analyzer	FSEK 30	826939/005	Rohde & Schwarz	12 M	-	31.03.2014
265	peak power sensor	NRV-Z33, Model 04	840414/009	Rohde & Schwarz	24 M	-	31.03.2012
266	peak power sensor	NRV-Z31, Model 04	843383/016	Rohde & Schwarz	24 M	-	31.03.2012
267	notch filter GSM 850	WRCA 800/960-6EEK	9	Wainwright GmbH	pre-m	2	
268	AC/DC power supply	EA 3050-A	9823636	Elektro Automatik	pre-m	2	
270	termination	1418 N	BB6935	Weinschel	pre-m	2	
271	termination	1418 N	BE6384	Weinschel	pre-m	2	
272	attenuator (20 dB) 50 W	Model 47	BF6239	Weinschel	pre-m	2	
273	attenuator (10 dB) 100 W	Model 48	BF9229	Weinschel	pre-m	2	
274	attenuator (10 dB) 50 W	Model 47 (10 dB) 50 W	BG0321	Weinschel	pre-m	2	
275	DC-Block	Model 7003 (N)	C5129	Weinschel	pre-m	2	
276	DC-Block	Model 7006 (SMA)	C7061	Weinschel	pre-m	2	
279	power divider	1515 (SMA)	LH855	Weinschel	pre-m	2	
287	pre-amplifier 25MHz - 4GHz	AMF-2D-100M4G-35-10P	379418	Miteq	12 M	1c	30.06.2012
291	high pass filter GSM 850/900	WHJ 2200-4EE	14	Wainwright GmbH	12 M	1c	30.06.2012
298	Univ. Radio Communication Tester	CMU 200	832221/091	Rohde & Schwarz	pre-m	3	
300	AC LISN (50 Ohm/50µH, 1-phase)	ESH3-Z5	892 239/020	Rohde & Schwarz	24/12 M	-	31.03.2012
301	attenuator (20 dB) 50W, 18GHz	47-20-33	AW0272	Lucas Weinschel	pre-m	2	
302	horn antenna 40 GHz (Meas 1)	BBHA9170	155	Schwarzbeck	36 M	-	31.03.2014
303	horn antenna 40 GHz (Subst 1)	BBHA9170	156	Schwarzbeck	36 M	-	31.03.2014
331	Climatic Test Chamber -40/+80 Grad	HC 4055	43146	Heraeus Vötsch	24 M	-	30.11.2012
341	Digital Multimeter	Fluke 112	81650455	Fluke	24 M	-	31.03.2012
342	Digital Multimeter	Voltcraft M-4660A	IB 255466	Voltcraft	24 M	-	31.03.2013
347	laboratory site	radio lab.	-	-	-	5	
348	laboratory site	EMI conducted	-	-	-	5	
354	DC - Power Supply 40A	NGPE 40/40	448	Rohde & Schwarz	pre-m	2	
355	Power Meter	URV 5	891310/027	Rohde & Schwarz	24 M	-	31.03.2012
356	power sensor	NRV-Z1	882322/014	Rohde & Schwarz	24 M	-	31.03.2013
357	power sensor	NRV-Z1	861761/002	Rohde & Schwarz	24 M	-	31.03.2013
373	V-Network 5µH/50 Ohm	ESH3-Z6	100535	Rohde & Schwarz	24/12 M	-	31.03.2012
376	Horn Antenna 6 GHz	BBHA9120 E	BBHA 9120 E 179	Schwarzbeck	12 M	-	31.03.2012
377	Emi Test Receiver	ESCS 30	100160	Rohde & Schwarz	12 M	-	31.03.2012
389	Digital Multimeter	Keithley 2000	0583926	Keithley	24 M	-	31.03.2013
392	Radio Communication Tester	MT8820A	6K00000788	Anritsu	12 M	-	31.03.2012
431	Model 7405	Near-Field Probe Set	9305-2457	EMCO	-	4	
441	CTC-SAR-EMI Cable Loss	System EMI field (SAR) Cable	-	CETECOM	12 M	5	31.09.2011
443	CTC-FAR-EMI-RSE	System CTC-FAR-EMI-	-	ETS-	12 M	5	30.06.2012

Ref.-No.	Equipment	Type	Serial-No.	Manufacturer	Interval of calibration	Remark	Cal due
		RSE		Lindgren/CETECOM			
448	notch filter WCDMA_FDD II	WRCT 1850.0/2170.0-5/40-10SSK	5	Wainwright Instruments GmbH	12 M	1c	30.06.2012
449	notch filter WCDMA FDD V	WRCT 824.0/894.0-5/40-8SSK	1	Wainwright	12 M	1c	30.06.2012
454	Oscilloscope	HM 205-3	9210 P 29661	Hameg	-	4	
456	DC-Power supply 0-5 A	EA 3013 S	207810	Elektro Automatik	pre-m	2	
459	DC -Power supply 0-5 A , 0-32 V	EA-PS 2032-50	910722	Elektro Automatik	pre-m	2	
460	Univ. Radio Communication Tester	CMU 200	108901	Rohde & Schwarz	12 M	-	31.03.2012
463	Universal source	HP3245A	2831A03472	Agilent	-	4	
466	Digital Multimeter	Fluke 112	89210157	Fluke USA	24 M	-	31.03.2012
467	Digital Multimeter	Fluke 112	89680306	Fluke USA	24 M	-	31.03.2012
468	Digital Multimeter	Fluke 112	90090455	Fluke USA	24 M	-	31.03.2012
477	ReRadiating GPS-System	AS-47	-	Automotive Cons. Fink	-	3	
480	power meter (Fula)	NRVS	838392/031	Rohde & Schwarz	24 M	-	31.03.2013
482	filter matrix	Filter matrix SAR 1	-	CETECOM (Brl)	-	1d	
484	pre-amplifier 2,5 - 18 GHz	AMF-5D-02501800-25-10P	1244554	Miteq	12 M	-	30.07.2012
487	System CTC NSA-Verification SAR-EMI	System EMI field (SAR) NSA	-	ETS Lindgren/CETECOM	12 M	-	30.09.2011
489	Emi Test Receiver	ESU40	1000-30	Rohde & Schwarz	12 M	-	31.03.2012
502	band reject filter	WRCG 1709/1786-1699/1796-	SN 9	Wainwright	pre-m	2	
503	band reject filter	WRCG 824/849-814/859-60/10SS	SN 5	Wainwright	pre-m	2	
512	notch filter GSM 850	WRCA 800/960-02/40-6EEK	SN 24	Wainwrght	12 M	1c	30.06.2012
517	relais switch matrix	HF Relais Box Keithley System	SE 04	Keithley	pre-m	2	
523	Digital Multimeter	L4411A	MY46000154	Agilent	24 M	-	31.03.2013
529	6 dB Broadband resistive power divider	Model 1515	LH 855	Weinschel	pre-m	2	
547	Univ. Radio Communication Tester	CMU 200	835390/014	Rohde & Schwarz	12 M	-	31.03.2012
548	Digital-Barometer	GBP 2300	without	Greisinger GmbH	36/12 M	-	31.03.2012
549	Log.Per-Antenna	HL025	1000060	Rohde & Schwarz	36/12 M	-	31.03.2012
552	high pass filter 2,8-18GHz	WHKX 2.8/18G-10SS	4	Wainwright	12 M	1c	30.07.2012
558	System CTC FAR S-VSWR	System CTC FAR S-VSWR	-	CTC	24 M	-	31.07.2013
574	Biconilog Hybrid Antenna	BTA-L	980026L	Frankonia	36/12 M	-	30.03.2013
584	Spectrum Analyzer	FSU 8	100248	Rohde & Schwarz	12 M	-	31.03.2012
594	Univ. Radio Communication Tester	CMW500	101757	Rohde & Schwarz	24 M	-	31.03.2012
597	Univ. Radio Communication Tester	CMU 200	100347	Rohde & Schwarz	12 M	-	31.03.2012
598	Spectrum Analyzer	FSEM 30 (Reserve)	831259/013	Rohde & Schwarz	24 M	-	13.01.2013
600	power meter	NRVD (Reserve)	834501/018	Rohde & Schwarz	24 M	-	31.03.2013
601	medium-sensitivity diode sensor	NRV-Z5 (Reserve)	8435323/003	Rohde & Schwarz	24 M	-	12.01.2013
602	peak power sensor	NRV-Z32 (Reserve)	835080	Rohde & Schwarz	24 M	-	12.01.2013
608	UltraLog-Antenna	HL 562	830547/009	Rohde & Schwarz	36/12 M	-	31.03.2014
611	DC power supply	E3632A	KR 75305854	Agilent	pre-m	2	
612	DC power supply	E3632A	MY 40001321	Agilent	pre-m	2	
613	Attenuator	R416120000 20dB 10W	Lot. 9828	Radiall	pre-m	2	

6.1.3. Legend

Note / remarks		Calibrated during system calibration:
	1a	System CTC-SAR-EMS (Ref.-No. 442)
	1b	System-CTC-EMS-Conducted (Ref.-No. 335)
	1c	System CTC-FAR-EMI-RSE (Ref.-No . 443)
	1d	System CTC-SAR-EMI (Ref.-No . 441)
	1e	System CTC-OATS (EMI radiated) (Ref.-No. 337)
	1 f	System CTC-CTIA-OTA (Ref.-No . 420)
	1 g	System CTC-FAR-EMS (Ref.-No . 444)
	2	Calibration or equipment check immediately before measurement
	3	Regulatory maintained equipment for functional check or support purpose
	4	Ancillary equipment without calibration e.g. mechanical equipment or monitoring equipment
	5	Test System

Interval of calibration	12 M	12 month
	24 M	24 month
	36 M	36 month
	24/12 M	Calibration every 24 months, between this every 12 months internal validation

	36/12 M	Calibration every 36 months, between this every 12 months internal validation
	Pre-m	Check before starting the measurement
	-	Without calibration

7. Correction factors due to reduced meas. distance (f< 30 MHz)

The used correction factors when the measurement distance is reduced, are taken from IEEC Transaction EMC, Vol 47, No.3, Aug. 2005, Journal Paper *"EXTRAPOLATING NEAR-FIELD EMISSIONS OF LOW-FREQUENCY LOOP TRANSMITTERS"*.

Used Transducer factors (f < 30 MHz)					
1	2	3	4	5	6
					=2+3+4+5
Frequency	Antenna factor	Corection factor		Cable loss	Transducer factor
		300m to 3m	30m to 3m		
kHz	dB µV/m	dB	dB	dB	dB µV/m
9,0	20,0	-116,7		0,0	-96,7
10,6	20,0	-116,7		0,0	-96,7
12,6	20,0	-116,7		0,0	-96,7
14,8	20,0	-116,7		0,0	-96,7
17,5	20,0	-116,6		0,0	-96,6
20,7	20,0	-116,6		0,0	-96,6
24,4	20,0	-116,6		0,0	-96,6
28,9	20,0	-116,6		0,0	-96,6
34,1	20,0	-116,5		0,0	-96,5
40,3	20,0	-116,4		0,0	-96,4
47,6	20,0	-116,3		0,0	-96,3
56,2	20,0	-116,2		0,0	-96,2
66,4	20,0	-116,0		0,0	-96,0
78,4	20,0	-115,8		0,0	-95,8
92,7	20,0	-115,4		0,0	-95,4
109,4	20,0	-115,0		0,0	-95,0
129,3	20,0	-114,5		0,0	-94,5
152,7	20,0	-113,9		0,0	-93,9
180,4	20,0	-113,1		0,0	-93,1
213,1	20,0	-112,2		0,0	-92,2
251,7	20,0	-111,3		0,0	-91,3
297,3	20,0	-108,3		0,0	-88,3
351,2	20,0	-105,2		0,0	-85,2
414,8	20,0	-102,1		0,0	-82,1
490,0	20,0	-99,1		0,0	-79,1
490,0	20,0		-56,4	0,1	-36,3
582,0	20,0		-56,2	0,1	-36,1
690,0	20,0		-56,0	0,2	-35,8
820,0	20,0		-55,7	0,2	-35,5
973,0	20,0		-55,4	0,2	-35,2
1.155,0	20,0		-54,9	0,3	-34,6
1.371,0	20,0		-54,4	0,3	-34,1
1.627,0	20,0		-53,7	0,3	-33,4
1.931,0	20,0		-52,9	0,4	-32,5
2.292,0	20,0		-52,0	0,4	-31,6
2.721,0	20,0		-49,8	0,5	-29,3
3.230,0	20,0		-46,6	0,5	-26,1
3.834,0	20,0		-43,3	0,6	-22,7
4.551,0	20,0		-40,1	0,6	-19,5
5.402,0	20,0		-36,8	0,7	-16,1
6.412,0	20,0		-33,5	0,7	-12,8
7.612,0	20,0		-30,3	0,8	-9,5
9.035,0	20,0		-27,0	0,8	-6,2
10.725,0	20,0		-23,9	0,9	-3,0
12.730,0	20,0		-21,2	0,9	-0,3
15.111,0	20,0		-19,3	1,0	1,7
17.937,0	20,0		-18,4	1,0	2,6
21.292,0	20,0		-18,2	1,1	2,9
25.274,0	20,0		-18,3	1,1	2,8
30.000,0	20,0		-18,4	1,2	2,8