CETECOM ICT Services
consulting - testing - certification

TEST REPORT

Test Report No.: 1-2977-79-02/11

DAkkS Deutsche Akkreditierungsstelle D-PL-12076-01-01

Testing Laboratory

CETECOM ICT Services GmbH
Untertürkheimer Straße 6 – 10
66117 Saarbrücken/Germany
Phone: + 49 681 5 98 - 0
Fax: + 49 681 5 98 - 9075
Internet: http://www.cetecom.com
e-mail: ict@cetecom.com

Accredited Test Laboratory:
The test laboratory (area of testing) is accredited according to DIN EN ISO/IEC 17025

DAkkS registration number: D-PL-12076-01-01

Applicant

Sony Ericsson Mobile Communications AB
Nya Vattentornet
22188 Lund/SWEDEN

Phone: +46 46 19 30 00

Contact: Håkan Sjöberg
e-mail: hakan.sjoberg@sonyericsson.com
Phone: +46 46 19 35 59
Fax: +46 46 19 32 95

Manufacturer

Sony Ericsson Mobile Communications AB
Nya Vattentornet
22188 Lund/SWEDEN

Test Standard/s

IEEE 1528-2003	Recommended Practice for Determining the Peak Spatial-Average Specific Absorption Rate (SAR)in the Human Head from Wireless Communications Devices: Measurement Techniques
OET Bulletin 65 Supplement C	Evaluating Compliance with FCC Guidelines for Human Exposure to Radiofrequency Electromagnetic Fields
RSS-102 Issue 4	Radio Frequency Exposure Compliance of Radiocommunication Apparatus (All Frequency Bands)

For further applied test standards please refer to section 3 of this test report.

Test Item

Kind of test item:	Mobile Phone
Device type:	portable device
Model name:	**AAD-3880123-BV**
S/N serial number:	BX902GJNRZ / BX902GJNT2 (WLAN)
FCC-ID:	PY7A3880123
IC:	4170B-A3880123
IMEI-Number:	00440214-308390-9 / 00440214-308364-4 (for WLAN)
Hardware status:	AP2
Software status:	4.0.1.A.0.99 / s_atp_coconut_1_0_36 (for WLAN)
Frequency:	see technical details
Antenna:	integrated antenna
Battery option:	Li-Polymer 3.7V / 1200mAh
Accessories:	Stereo headset
Test sample status:	production unit
Exposure category:	general population / uncontrolled environment

Test Report authorised:

2011-08-18 Thomas Vogler

Test performed:

2011-08-18 Oleksandr Hnatovskiy

1 Table of contents

1 Table of contents 2

2 General information 3

2.1 Notes 3
2.2 Application details 3
2.3 Statement of compliance 3
2.4 Technical details 4

3 Test standard/s: 5

3.1 RF exposure limits 5

4 Summary of Measurement Results 6

5 Test Environment 6

6 Test Set-up 7

6.1 Measurement system 7
6.1.1 System Description 7
6.1.2 Test environment 8
6.1.3 Probe description 8
6.1.4 Phantom description 9
6.1.5 Device holder description 9
6.1.6 Scanning procedure 10
6.1.7 Spatial Peak SAR Evaluation 11
6.1.8 Data Storage and Evaluation 12
6.1.9 Tissue simulating liquids: dielectric properties 14
6.1.10 Tissue simulating liquids: parameters 15
6.1.11 Measurement uncertainty evaluation for SAR test 16
6.1.12 Measurement uncertainty evaluation for system validation 17
6.1.13 System validation 18
6.1.14 Validation procedure 19

7 Detailed Test Results 20

7.1 Conducted power measurements 20
7.1.1 Conducted power measurements GSM 850 MHz 20
7.1.2 Conducted power measurements GSM 1900 MHz 21
7.1.3 Justification of SAR measurements in GSM mode 21
7.1.4 Conducted power measurements WLAN 2.4 GHz 22
7.1.5 Multiple Transmitter Information 22
7.1.6 Mobile hotspot SAR measurement positions 23
7.2 SAR test results 24
7.2.1 Results overview 24
7.2.2 General description of test procedures 26

8 Test equipment and ancillaries used for tests 27

9 Observations 27

Annex A: System performance verification 28

Annex B: DASY4 measurement results 35

Annex B.1: GSM 850MHz head 35
Annex B.2: GSM 850MHz body 47
Annex B.3: GSM 1900MHz head 57
Annex B.4: GSM 1900MHz body 69

Annex B.5: WLAN 2450MHz head 79
Annex B.6: WLAN 2450MHz body 93
Annex B.7: Z-axis scan 105
Annex B.8: Liquid depth 108

Annex C: Photo documentation 111

Annex D: RF Technical Brief Cover Sheet acc. to RSS-102 Annex A 124

Annex D.9: Declaration of RF Exposure Compliance 124

Annex E: Calibration parameters 125

Annex F: Document History 125

Annex G: Further Information 125

2 General information

2.1 Notes

The test results of this test report relate exclusively to the test item specified in this test report. CETECOM ICT Services GmbH does not assume responsibility for any conclusions and generalisations drawn from the test results with regard to other specimens or samples of the type of the equipment represented by the test item. The test report may only be reproduced or published in full. Reproduction or publication of extracts from the report requires the prior written approval of CETECOM ICT Services GmbH.
This test report is electronically signed and valid without handwriting signature. For verification of the electronic signatures, the public keys can be requested at the testing laboratory.

2.2 Application details

Date of receipt of order:	2011-08-01
Date of receipt of test item:	2011-08-01
Start of test:	2011-08-01
End of test:	2011-08-17
Person(s) present during the test:	

2.3 Statement of compliance

The SAR values found for the AAD-3880123-BV Mobile Phone are below the maximum recommended levels of 1.6 W/Kg as averaged over any 1 g tissue according to the FCC rule §2.1093, the ANSI/IEEE C 95.1:1999, the NCRP Report Number 86 for uncontrolled environment, according to the Health Canada's Safety Code 6 and the Industry Canada Radio Standards Specification RSS-102 for General Population/Uncontrolled exposure.
According to October 2010 TCB Workshop for body worn operation in WLAN hot spot mode this device has been tested with 10 mm distance to the phantom.

2.4 Technical details

Band tested for this test report	Technology	Frequency band	Lowest transmit frequency/MHz	Highest transmit frequency/MHz	Lowest receive Frequency/MHz	Highest receive Frequency/MHz	Kind of modulation	Power Class	Tested power control level	GPRS/EGPRS mobile station class	GPRS/EGPRS multislot class	(E)GPRS voice mode or DTM	Test channel low	Test channel middle	Test channel high	Maximum output power/dBm)*
☐	GSM	GSM	880.2	914.8	925.2	959.8	GMSK 8-PSK	4 E2	5	B	12	no	975	37	124	--
☐	GSM	DCS	1710.2	1784.8	1805.2	1879.8	GMSK 8-PSK	1 E2	0	B	12	no	512	698	885	--
☒	GSM	cellular	824.2	848.8	869.2	893.8	GMSK 8-PSK	4 E2	5	B	12	no	128	190	251	33.4
☒	GSM	PCS	1850.2	1909.8	1930.2	1989.8	GMSK 8-PSK	1 E2	0	B	12	no	512	661	810	30.6
☐	UMTS	FDD I	1922.4	1977.6	2112.4	2167.6	QPSK	3	max	--	--	--	9612	9750	9888	--
☐	UMTS	FDD VIII	882.4	912.6	927.4	957.6	QPSK	3	max	--	--	--	2712	2787	2863	--
☐	WLAN	ISM	2412	2472	2412	2472	CCK OFDM	--	max	--	--	--	1	7	13	--
☒	WLAN US	ISM	2412	2462	2412	2462	CCK OFDM	--	max	--	--	--	1	6	11	16.2
☐	BT	ISM	2412	2462	2412	2462	GFSK	3	max	--	--	--	0	39	78	6.5

)*: slotted peak power for GSM, averaged max. RMS power for UMTS, WLAN and BT.

3 Test standard/s:

Test Standard	Version	Test Standard Description
IEEE 1528-2003	2003-04	Recommended Practice for Determining the Peak Spatial-Average Specific Absorption Rate (SAR) in the Human Head from Wireless Communications Devices: Measurement Techniques
OET Bulletin 65 Supplement C	1997-01 2001-01	Evaluating Compliance with FCC Guidelines for Human Exposure to Radiofrequency Electromagnetic Fields
RSS-102 Issue 4	2010-03	Radio Frequency Exposure Compliance of Radiocommunication Apparatus (All Frequency Bands)
Canada's Safety Code No. 6	99-EHD-237	Limits of Human Exposure to Radiofrequency Electromagnetic Fields in the Frequency Range from 3 kHz to 300 GHz
IEEE Std. C95-3	1991	Recommended Practice for the Measurement of Potentially Hazardous Electromagnetic Fields – RF and Microwave
IEEE Std. C95-1	1999	Standard for Safety Levels with Respect to Human Exposure to Radio Frequency Electromagnetic Fields

3.1 RF exposure limits

Human Exposure	Uncontrolled Environment General Population	Controlled Environment Occupational
Spatial Peak SAR* (Brain and Trunk)	**1.60 mW/g**	8.00 mW/g
Spatial Average SAR** (Whole Body)	0.08 mW/g	0.40 mW/g
Spatial Peak SAR*** (Hands/Feet/Ankle/Wrist)	4.00 mW/g	20.00 mW/g

Table 1: RF exposure limits

The limit applied in this test report is shown in bold letters

Notes:

* The Spatial Peak value of the SAR averaged over any 1 gram of tissue (defined as a tissue volume in the shape of a cube) and over the appropriate averaging time

** The Spatial Average value of the SAR averaged over the whole body.

*** The Spatial Peak value of the SAR averaged over any 10 grams of tissue (defined as a tissue volume in the shape of a cube) and over the appropriate averaging time.

Uncontrolled Environments are defined as locations where there is the exposure of individuals who have no knowledge or control of their exposure.

Controlled Environments are defined as locations where there is exposure that may be incurred by persons who are aware of the potential for exposure, (i.e. as a result of employment or occupation).

4 Summary of Measurement Results

☒	**No deviations from the technical specifications ascertained**
☐	Deviations from the technical specifications ascertained

5 Test Environment

Ambient temperature:	20 – 24 °C
Tissue Simulating liquid:	20 – 24 °C
Relative humidity content:	40 – 50 %
Air pressure:	not relevant for this kind of testing
Power supply:	230 V / 50 Hz

Exact temperature values for each test are shown in the table(s) under 2.5. and/or on the measurement plots.

6 Test Set-up

6.1 Measurement system

6.1.1 System Description

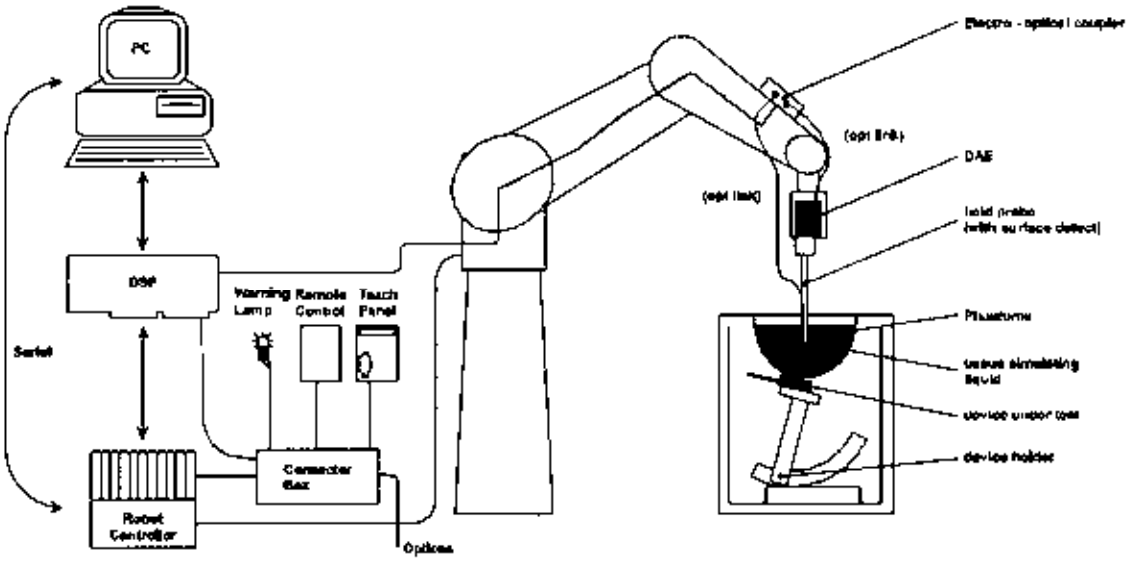

- The DASY4 system for performing compliance tests consists of the following items:
- A standard high precision 6-axis robot (Stäubli RX family) with controller and software. An arm extension for accommodating the data acquisition electronics (DAE).
- A dosimetric probe, i.e. an isotropic E-field probe optimized and calibrated for usage in tissue simulating liquid. The probe is equipped with an optical surface detector system.
- A data acquisition electronic (DAE) which performs the signal amplification, signal multiplexing, AD-conversion, offset measurements, mechanical surface detection, collision detection, etc. The unit is battery powered with standard or rechargeable batteries. The signal is optically transmitted to the EOC.
- A unit to operate the optical surface detector which is connected to the EOC.
- The Electro-Optical Coupler (EOC) performs the conversion from the optical into a digital electric signal of the DAE. The EOC is connected to the DASY4 measurement server.
- The DASY4 measurement server, which performs all real-time data evaluation for field measurements and surface detection, controls robot movements and handles safety operation. A computer operating Windows 2000
- DASY4 software and SEMCAD data evaluation software.
- Remote control with teach panel and additional circuitry for robot safety such as warning lamps, etc.
- The generic twin phantom enabling the testing of left-hand and right-hand usage.
- The device holder for handheld mobile phones.
- Tissue simulating liquid mixed according to the given recipes.
- System validation dipoles allowing to validate the proper functioning of the system.

6.1.2 Test environment

The DASY4 measurement system is placed at the head end of a room with dimensions:
5 x 2.5 x 3 m³, the SAM phantom is placed in a distance of 75 cm from the side walls and 1.1m from the rear wall. Above the test system a 1.5 x 1.5 m² array of pyramid absorbers is installed to reduce reflections from the ceiling.
Picture 1 of the photo documentation shows a complete view of the test environment.
The system allows the measurement of SAR values larger than 0.005 mW/g.

6.1.3 Probe description

Isotropic E-Field Probe ET3DV6 for Dosimetric Measurements

Technical data according to manufacturer information	
Construction	Symmetrical design with triangular core Built-in optical fiber for surface detection system Built-in shielding against static charges PEEK enclosure material (resistant to organic solvents, e.g., glycolether)
Calibration	In air from 10 MHz to 2.5 GHz In head tissue simulating liquid (HSL) at 900 (800-1000) MHz and 1.8 GHz (1700-1910 MHz) (accuracy ± 9.5%; k=2) Calibration for other liquids and frequencies upon request
Frequency	10 MHz to 3 GHz (dosimetry); Linearity: ± 0.2 dB (30 MHz to 3 GHz)
Directivity	± 0.2 dB in HSL (rotation around probe axis) ± 0.4 dB in HSL (rotation normal to probe axis)
Dynamic range	5 µW/g to > 100 mW/g; Linearity: ± 0.2 dB
Optical Surface Detection	± 0.2 mm repeatability in air and clear liquids over diffuse reflecting surfaces (ET3DV6 only)
Dimensions	Overall length: 330 mm Tip length: 16 mm Body diameter: 12 mm Tip diameter: 6.8 mm Distance from probe tip to dipole centers: 2.7 mm
Application	General dosimetry up to 3 GHz Compliance tests of mobile phones Fast automatic scanning in arbitrary phantoms (ET3DV6)

6.1.4 Phantom description

The used SAM Phantom meets the requirements specified in Edition 01-01 of Supplement C to OET Bulletin 65 for Specific Absorption Rate (SAR) measurements.
The phantom consists of a fibreglass shell integrated in a wooden table. It allows left-hand and right-hand head as well as body-worn measurements with a maximum liquid depth of 18 cm in head position and 22 cm in planar position (body measurements). The thickness of the Phantom shell is 2 mm +/- 0.1 mm.

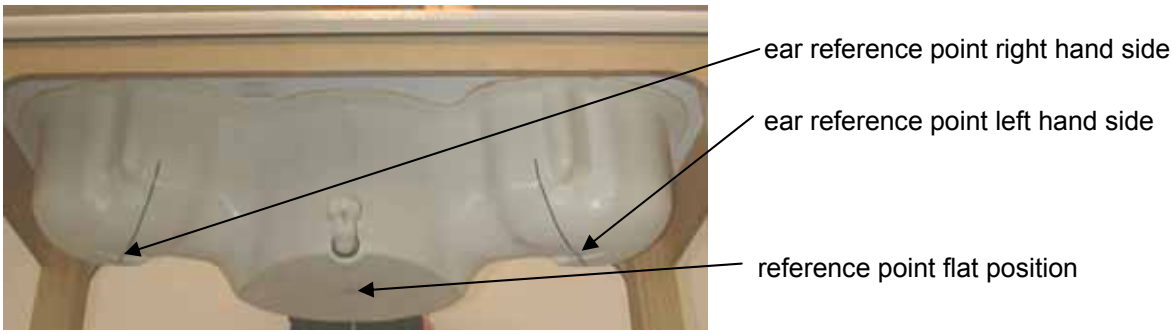

6.1.5 Device holder description

The DASY4 device holder has two scales for device rotation (with respect to the body axis) and the device inclination (with respect to the line between the ear openings). The plane between the ear openings and the mouth tip has a rotation angle of 65°. The bottom plate contains three pair of bolts for locking the device holder. The device holder positions are adjusted to the standard measurement positions in the three sections. This device holder is used for standard mobile phones or PDA's only. If necessary an additional support of polystyrene material is used.

Larger DUT's (e.g. notebooks) cannot be tested using this device holder. Instead a support of bigger polystyrene cubes and thin polystyrene plates is used to position the DUT in all relevant positions to find and measure spots with maximum SAR values.
Therefore those devices are normally only tested at the flat part of the SAM.

6.1.6 Scanning procedure

- The DASY4 installation includes predefined files with recommended procedures for measurements and validation. They are read-only document files and destined as fully defined but unmeasured masks. All test positions (head or body-worn) are tested with the same configuration of test steps differing only in the grid definition for the different test positions.

- The „reference“ and „drift“ measurements are located at the beginning and end of the batch process. They measure the field drift at one single point in the liquid over the complete procedure. The indicated drift is mainly the variation of the DUT’s output power and should vary max. +/- 5 %.

- The „surface check“ measurement tests the optical surface detection system of the DASY4 system by repeatedly detecting the surface with the optical and mechanical surface detector and comparing the results. The output gives the detecting heights of both systems, the difference between the two systems and the standard deviation of the detection repeatability. Air bubbles or refraction in the liquid due to separation of the sugar-water mixture gives poor repeatability (above ± 0.1mm). To prevent wrong results tests are only executed when the liquid is free of air bubbles. The difference between the optical surface detection and the actual surface depends on the probe and is specified with each probe. (It does not depend on the surface reflectivity or the probe angle to the surface within ± 30°.)

- The „area scan“ measures the SAR above the DUT or verification dipole on a parallel plane to the surface. It is used to locate the approximate location of the peak SAR with 2D spline interpolation. The robot performs a stepped movement along one grid axis while the local electrical field strenth is measured by the probe. The probe is touching the surface of the SAM during acquisition of measurement values. The standard scan uses large grid spacing for faster measurement. Standard grid spacing for head measurements is 15 mm in x- and y- dimension. If a finer resolution is needed, the grid spacing can be reduced. Grid spacing and orientation have no influence on the SAR result. For special applications where the standard scan method does not find the peak SAR within the grid, e.g. mobile phones with flip cover, the grid can be adapted in orientation. Results of this coarse scan are shown in annex 2.

- A „7x7x7 zoom scan” measures the field in a volume around the 2D peak SAR value acquired in the previous „coarse“ scan. This is a fine 7x7 grid where the robot additionally moves the probe in 7 steps along the z-axis away from the bottom of the Phantom. Grid spacing for the cube measurement is 5 mm in x and y-direction and 5 mm in z-direction. DASY4 is also able to perform repeated zoom scans if more than 1 peak is found during area scan. In this document, the evaluated peak 1g and 10g averaged SAR values are shown in the 2D-graphics in annex 2. Test results relevant for the specified standard (see section 3) are shown in table form in section 7.

- A Z-axis scan measures the total SAR value at the x-and y-position of the maximum SAR value found during the cube 7x7x7 scan. The probe is moved away in z-direction from the bottom of the SAM phantom in 2mm steps. This measurement shows the continuity of the liquid and can - depending in the field strength – also show the liquid depth. A z-axis scan of the measurement with maximum SAR value is shown in annex 2.

6.1.7 Spatial Peak SAR Evaluation

The spatial peak SAR - value for 1 and 10 g is evaluated after the Cube measurements have been done. The basis of the evaluation are the SAR values measured at the points of the fine cube grid consisting of 7 x 7 x 7 points. The algorithm that finds the maximal averaged volume is separated into three different stages.

- The data between the dipole center of the probe and the surface of the phantom are extrapolated. This data cannot be measured since the center of the dipole is 2.7 mm away from the tip of the probe and the distance between the surface and the lowest measuring point is about 1 mm (see probe calibration sheet). The extrapolated data from a cube measurement can be visualized by selecting 'Graph Evaluated'.

- The maximum interpolated value is searched with a straight-forward algorithm. Around this maximum the SAR - values averaged over the spatial volumes (1g or 10 g) are computed using the 3d-spline interpolation algorithm. If the volume cannot be evaluated (i.e., if a part of the grid was cut off by the boundary of the measurement area) the evaluation will be started on the corners of the bottom plane of the cube.

- All neighboring volumes are evaluated until no neighboring volume with a higher average value is found.

Extrapolation

The extrapolation is based on a least square algorithm [W. Gander, Computermathematik, p.168-180]. Through the points in the first 3 cm along the z-axis, polynomials of order four are calculated. These polynomials are then used to evaluate the points between the surface and the probe tip. The points, calculated from the surface, have a distance of 1 mm from each other.

Interpolation

The interpolation of the points is done with a 3d-Spline. The 3d-Spline is composed of three one-dimensional splines with the "Not a knot"-condition [W. Gander, Computermathematik, p.141-150] (x, y and z -direction) [Numerical Recipes in C, Second Edition, p.123ff].

Volume Averaging

At First the size of the cube is calculated. Then the volume is integrated with the trapezoidal algorithm. 8000 points (20x20x20) are interpolated to calculate the average.

Advanced Extrapolation

DASY4 uses the advanced extrapolation option which is able to compansate boundary effects on E-field probes.

6.1.8 Data Storage and Evaluation

Data Storage

The DASY4 software stores the acquired data from the data acquisition electronics as raw data (in microvolt readings from the probe sensors), together with all necessary software parameters for the data evaluation (probe calibration data, liquid parameters and device frequency and modulation data) in measurement files with the extension ".DA4". The software evaluates the desired unit and format for output each time the data is visualized or exported. This allows verification of the complete software setup even after the measurement and allows correction of incorrect parameter settings. For example, if a measurement has been performed with a wrong crest factor parameter in the device setup, the parameter can be corrected afterwards and the data can be re-evaluated.

The measured data can be visualized or exported in different units or formats, depending on the selected probe type ([V/m], [A/m], [°C], [mW/g], [mW/cm²], [dBrel], etc.). Some of these units are not available in certain situations or show meaningless results, e.g., a SAR output in a lossless media will always be zero. Raw data can also be exported to perform the evaluation with other software packages.

Data Evaluation by SEMCAD

The SEMCAD software automatically executes the following procedures to calculate the field units from the microvolt readings at the probe connector. The parameters used in the evaluation are stored in the configuration modules of the software:

Probe parameters:	- Sensitivity	$Norm_i$, a_{i0}, a_{i1}, a_{i2}
	- Conversion factor	$ConvF_i$
	- Diode compression point	Dcpi
Device parameters:	- Frequency	f
	- Crest factor	cf
Media parameters:	- Conductivity	σ
	- Density	ρ

These parameters must be set correctly in the software. They can be found in the component documents or they can be imported into the software from the configuration files issued for the DASY4 components. In the direct measuring mode of the multimeter option, the parameters of the actual system setup are used. In the scan visualization and export modes, the parameters stored in the corresponding document files are used.

The first step of the evaluation is a linearization of the filtered input signal to account for the compression characteristics of the detector diode. The compensation depends on the input signal, the diode type and the DC-transmission factor from the diode to the evaluation electronics.

If the exciting field is pulsed, the crest factor of the signal must be known to correctly compensate for peak power. The formula for each channel can be given as:

$$V_i = U_i + U_i^2 \cdot cf/dcp_i$$

with	V_i	= compensated signal of channel i	(i = x, y, z)
	U_i	= input signal of channel i	(i = x, y, z)
	cf	= crest factor of exciting field	(DASY parameter)
	dcp_i	= diode compression point	(DASY parameter)

From the compensated input signals the primary field data for each channel can be evaluated:

E-field probes: $$E_i = (V_i / Norm_i \cdot ConvF)^{1/2}$$

H-field probes: $$H_i = (V_i)^{1/2} \cdot (a_{i0} + a_{i1}f + a_{i2}f^2)/f$$

with	V_i	= compensated signal of channel i	(i = x, y, z)
	$Norm_i$	= sensor sensitivity of channel i [mV/(V/m)^2] for E-field Probes	(i = x, y, z)
	ConvF	= sensitivity enhancement in solution	
	a_{ij}	= sensor sensitivity factors for H-field probes	
	f	= carrier frequency [GHz]	
	E_i	= electric field strength of channel i in V/m	
	H_i	= magnetic field strength of channel i in A/m	

The RSS value of the field components gives the total field strength (Hermitian magnitude):

$$E_{tot} = (E_x^2 + E_Y^2 + E_z^2)^{1/2}$$

The primary field data are used to calculate the derived field units.

$$SAR = (E_{tot}^2 \cdot \sigma) / (\rho \cdot 1000)$$

with	SAR	= local specific absorption rate in mW/g
	E_{tot}	= total field strength in V/m
	σ	= conductivity in [mho/m] or [Siemens/m]
	ρ	= equivalent tissue density in g/cm^3

Note that the density is normally set to 1 (or 1.06), to account for actual brain density rather than the density of the simulation liquid.The power flow density is calculated assuming the excitation field to be a free space field.

$$P_{pwe} = E_{tot}^2 / 3770 \qquad \text{or} \qquad P_{pwe} = H_{tot}^2 \cdot 37.7$$

with	P_{pwe}	= equivalent power density of a plane wave in mW/cm^2
	E_{tot}	= total electric field strength in V/m
	H_{tot}	= total magnetic field strength in A/m

6.1.9 Tissue simulating liquids: dielectric properties

The following materials are used for producing the tissue-equivalent materials.

(Liquids used for tests described in section 7. are marked with ☒) :

Ingredients (% of weight)	**Frequency (MHz)**					
frequency band	☐ 450	☒ 835	☐ 900	☐ 1800	☒ 1900	☒ 2450
Tissue Type	Head	Head	Head	Head	Head	Head
Water	38.56	41.45	40.92	52.64	54.9	62.7
Salt (NaCl)	3.95	1.45	1.48	0.36	0.18	0.5
Sugar	56.32	56.0	56.5	0.0	0.0	0.0
HEC	0.98	1.0	1.0	0.0	0.0	0.0
Bactericide	0.19	0.1	0.1	0.0	0.0	0.0
Triton X-100	0.0	0.0	0.0	0.0	0.0	36.8
DGBE	0.0	0.0	0.0	47.0	44.92	0.0

Table 2: Head tissue dielectric properties

Ingredients (% of weight)	**Frequency (MHz)**					
frequency band	☐ 450	☒ 835	☐ 900	☐ 1800	☒ 1900	☒ 2450
Tissue Type	Body	Body	Body	Body	Body	Body
Water	51.16	52.4	56.0	69.91	69.91	73.2
Salt (NaCl)	1.49	1.40	0.76	0.13	0.13	0.04
Sugar	46.78	45.0	41.76	0.0	0.0	0.0
HEC	0.52	1.0	1.21	0.0	0.0	0.0
Bactericide	0.05	0.1	0.27	0.0	0.0	0.0
Triton X-100	0.0	0.0	0.0	0.0	0.0	0.0
DGBE	0.0	0.0	0.0	29.96	29.96	26.7

Table 3: Body tissue dielectric properties

Salt: 99+% Pure Sodium Chloride
Sugar: 98+% Pure Sucrose
Water: De-ionized, 16MΩ+ resistivity
HEC: Hydroxyethyl Cellulose
DGBE: 99+% Di(ethylene glycol) butyl ether, [2-(2-butoxyethoxy)ethanol]
Triton X-100(ultra pure): Polyethylene glycol mono [4-(1,1,3,3-tetramethylbutyl)phenyl]ether

Note: Due to their availability body tissue simulating liquids as defined by FCC OET Bulletin 65 Supplement C are generally used for body worn SAR testing according to European standards.

6.1.10 Tissue simulating liquids: parameters

Liquid	Frequency (MHz)	Target head tissue		Measurement head tissue		Measurement date
		Permittivity	Conductivity[S/m]	Permittivity	Conductivity[S/m]	
HSL 850	824	41.5	0.90	43.2	0.87	2011-08-08
	837	41.5	0.90	43.0	0.89	2011-08-08
	849	41.5	0.90	42.9	0.90	2011-08-08
	900	41.5	0.97	42.3	0.95	2011-08-08
HSL 1900	1850	40.0	1.40	40.2	1.34	2011-08-08
	1880	40.0	1.40	40.1	1.37	2011-08-08
	1900	40.0	1.40	40.0	1.38	2011-08-08
	1910	40.0	1.40	40.0	1.39	2011-08-08
HSL 2450	2412	39.2	1.80	39.3	1.81	2011-08-16
	2437	39.2	1.80	39.3	1.84	2011-08-16
	2450	39.2	1.80	39.3	1.85	2011-08-16
	2462	39.2	1.80	39.2	1.86	2011-08-16

Table 4: Parameter of the head tissue simulating liquid

Liquid	Frequency (MHz)	Target body tissue		Measurement body tissue		Measurement date
		Permittivity	Conductivity[S/m]	Permittivity	Conductivity[S/m]	
M 850	824	55.2	0.97	54.8	0.97	2011-08-02
	837	55.2	0.97	54.7	0.98	2011-08-02
	849	55.2	0.97	54.6	1.00	2011-08-02
	900	55.0	1.05	54.1	1.05	2011-08-02
M 1900	1850	53.3	1.52	52.8	1.47	2011-08-04
	1880	53.3	1.52	52.7	1.50	2011-08-04
	1900	53.3	1.52	52.6	1.51	2011-08-04
	1910	53.3	1.52	52.6	1.53	2011-08-04
M 2450	2412	52.7	1.95	51.8	1.94	2011-08-17
	2437	52.7	1.95	51.8	1.97	2011-08-17
	2450	52.7	1.95	51.7	1.98	2011-08-17
	2462	52.7	1.95	51.7	2.00	2011-08-17

Table 5: Parameter of the body tissue simulating liquid

Note: The dielectric properties have been measured using the contact probe method at 22°C.

6.1.11 Measurement uncertainty evaluation for SAR test

The overall combined measurement uncertainty of the measurement system is ± 10.3% (K=1).
The expanded uncertainty (k=2) is assessed to be ± 20.6%
This measurement uncertainty budget is suggested by IEEE 1528-2003 and determined by Schmid & Partner Engineering AG. The breakdown of the individual uncertainties is as follows:

Error Sources	Uncertainty Value	Probability Distribution	Divi-sor	c_i 1g	c_i 10g	Standard Uncertainty 1g	Standard Uncertainty 10g	v_i^2 or v_{eff}
Measurement System								
Probe calibration	± 4.8%	Normal	1	1	1	± 4.8%	± 4.8%	∞
Axial isotropy	± 4.7%	Rectangular	√3	0.7	0.7	± 1.9%	± 1.9%	∞
Hemispherical isotropy	± 9.6%	Rectangular	√3	0.7	0.7	± 3.9%	± 3.9%	∞
Spatial resolution	± 0.0%	Rectangular	√3	1	1	± 0.0%	± 0.0%	∞
Boundary effects	± 1.0%	Rectangular	√3	1	1	± 0.6%	± 0.6%	∞
Probe linearity	± 4.7%	Rectangular	√3	1	1	± 2.7%	± 2.7%	∞
System detection limits	± 1.0%	Rectangular	√3	1	1	± 0.6%	± 0.6%	∞
Readout electronics	± 1.0%	Normal	1	1	1	± 1.0%	± 1.0%	∞
Response time	± 0.8%	Rectangular	√3	1	1	± 0.5%	± 0.5%	∞
Integration time	± 2.6%	Rectangular	√3	1	1	± 1.5%	± 1.5%	∞
RF ambient conditions	± 3.0%	Rectangular	√3	1	1	± 1.7%	± 1.7%	∞
Probe positioner	± 0.4%	Rectangular	√3	1	1	± 0.2%	± 0.2%	∞
Probe positioning	± 2.9%	Rectangular	√3	1	1	± 1.7%	± 1.7%	∞
Max. SAR evaluation	± 1.0%	Rectangular	√3	1	1	± 0.6%	± 0.6%	∞
Test Sample Related								
Device positioning	± 2.9%	Normal	1	1	1	± 2.9%	± 2.9%	145
Device holder uncertainty	± 3.6%	Normal	1	1	1	± 3.6%	± 3.6%	5
Power drift	± 5.0%	Rectangular	√3	1	1	± 2.9%	± 2.9%	∞
Phantom and Set-up								
Phantom uncertainty	± 4.0%	Rectangular	√3	1	1	± 2.3%	± 2.3%	∞
Liquid conductivity (target)	± 5.0%	Rectangular	√3	0.64	0.43	± 1.8%	± 1.2%	∞
Liquid conductivity (meas.)	± 2.5%	Normal	1	0.64	0.43	± 1.6%	± 1.1%	∞
Liquid permittivity (target)	± 5.0%	Rectangular	√3	0.6	0.49	± 1.7%	± 1.4%	∞
Liquid permittivity (meas.)	± 2.5%	Normal	1	0.6	0.49	± 1.5%	± 1.2%	∞
Combined Uncertainty						± 10.3%	± 10.0%	330
Expanded Std. Uncertainty						**± 20.6%**	**± 20.1%**	

Table 6: Measurement uncertainties

6.1.12 Measurement uncertainty evaluation for system validation

The overall combined measurement uncertainty of the measurement system is ± 8.4% (K=1).
The expanded uncertainty (k=2) is assessed to be ± 16.8%
This measurement uncertainty budget is suggested by IEEE 1528-2003 and determined by Schmid & Partner Engineering AG. The breakdown of the individual uncertainties is as follows:

Error Sources	Uncertainty Value	Probability Distribution	Divi-sor	c_i 1g	c_i 10g	Standard Uncertainty 1g	Standard Uncertainty 10g	v_i^2 or v_{eff}
Measurement System								
Probe calibration	± 4.8%	Normal	1	1	1	± 4.8%	± 4.8%	∞
Axial isotropy	± 4.7%	Rectangular	√3	0.7	0.7	± 1.9%	± 1.9%	∞
Hemispherical isotropy	± 0.0%	Rectangular	√3	0.7	0.7	± 0.0%	± 3.9%	∞
Boundary effects	± 1.0%	Rectangular	√3	1	1	± 0.6%	± 0.6%	∞
Probe linearity	± 4.7%	Rectangular	√3	1	1	± 2.7%	± 2.7%	∞
System detection limits	± 1.0%	Rectangular	√3	1	1	± 0.6%	± 0.6%	∞
Readout electronics	± 1.0%	Normal	1	1	1	± 1.0%	± 1.0%	∞
Response time	± 0.0%	Rectangular	√3	1	1	± 0.0%	± 0.0%	∞
Integration time	± 0.0%	Rectangular	√3	1	1	± 0.0%	± 0.0%	∞
RF ambient conditions	± 3.0%	Rectangular	√3	1	1	± 1.7%	± 1.7%	∞
Probe positioner	± 0.4%	Rectangular	√3	1	1	± 0.2%	± 0.2%	∞
Probe positioning	± 2.9%	Rectangular	√3	1	1	± 1.7%	± 1.7%	∞
Max. SAR evaluation	± 1.0%	Rectangular	√3	1	1	± 0.6%	± 0.6%	∞
Test Sample Related								
Dipole axis to liquid distance	± 2.0%	Normal	1	1	1	± 1.2%	± 1.2%	∞
Power drift	± 4.7%	Rectangular	√3	1	1	± 2.7%	± 2.7%	∞
Phantom and Set-up								
Phantom uncertainty	± 4.0%	Rectangular	√3	1	1	± 2.3%	± 2.3%	∞
Liquid conductivity (target)	± 5.0%	Rectangular	√3	0.64	0.43	± 1.8%	± 1.2%	∞
Liquid conductivity (meas.)	± 2.5%	Normal	1	0.64	0.43	± 1.6%	± 1.1%	∞
Liquid permittivity (target)	± 5.0%	Rectangular	√3	0.6	0.49	± 1.7%	± 1.4%	∞
Liquid permittivity (meas.)	± 2.5%	Normal	1	0.6	0.49	± 1.5%	± 1.2%	∞
Combined Uncertainty						**± 8.4%**	**± 8.1%**	
Expanded Std. Uncertainty						**± 16.8%**	**± 16.2%**	

Table 7: Measurement uncertainties

6.1.13 System validation

The system validation is performed for verifying the accuracy of the complete measurement system and performance of the software. The system validation is performed with tissue equivalent material according to IEEE 1528. The following table shows validation results for all frequency bands and tissue liquids used during the tests (plot(s) see annex A).

Validation Kit	Frequency	Target Peak SAR (1000 mW) (+/- 10%)	Target SAR_{1g} (1000 mW) (+/- 10%)	Measured Peak SAR (1000 mW)	Measured SAR_{1g} (1000 mW)	Measured date
D900V2 S/N: 102	**900 MHz head**	17.1 mW/g	11.2 mW/g	15.9 mW/g	10.5 mW/g	2011-08-08
D900V2 S/N: 102	**900 MHz body**	17.3 mW/g	11.3 mW/g	15.8 mW/g	11.1 mW/g	2011-08-03
D900V2 S/N: 102	**900 MHz body**	17.3 mW/g	11.3 mW/g	15.7 mW/g	10.8 mW/g	2011-08-04
D1900V2 S/N: 5d009	**1900 MHz head**	73.6 mW/g	40.0 mW/g	66.5 mW/g	35.9 mW/g	2011-08-08
D1900V2 S/N: 5d009	**1900 MHz body**	69.6 mW/g	41.8 mW/g	64.6 mW/g	39.2 mW/g	2011-08-04
D2450V2 S/N: 710	**2450 MHz head**	112.4 mW/g	51.6 mW/g	103.4 mW/g	51.9 mW/g	2011-08-16
D2450V2 S/N: 710	**2450 MHz body**	104.0 mW/g	54.4 mW/g	95.4 mW/g	49.5 mW/g	2011-08-17

Table 8: Results system validation

Note : 900 MHz probe/dipole calibration is valid +/-100 MHz and fully covers the 850 MHz band.

6.1.14 Validation procedure

The validation is performed by using a validation dipole which is positioned parallel to the planar part of the SAM phantom at the reference point. The distance of the dipole to the SAM phantom is determined by a plexiglass spacer. The dipole is connected to the signal source consisting of signal generator and amplifier via a directional coupler, N-connector cable and adaption to SMA. It is fed with a power of 1000 mW. To adjust this power a power meter is used. The power sensor is connected to the cable before the validation to measure the power at this point and do adjustments at the signal generator. At the outputs of the directional coupler both return loss as well as forward power are controlled during the validation to make sure that emitted power at the dipole is kept constant. This can also be checked by the power drift measurement after the test (result on plot).
Validation results have to be equal or near the values determined during dipole calibration (target SAR in table above) with the relevant liquids and test system.

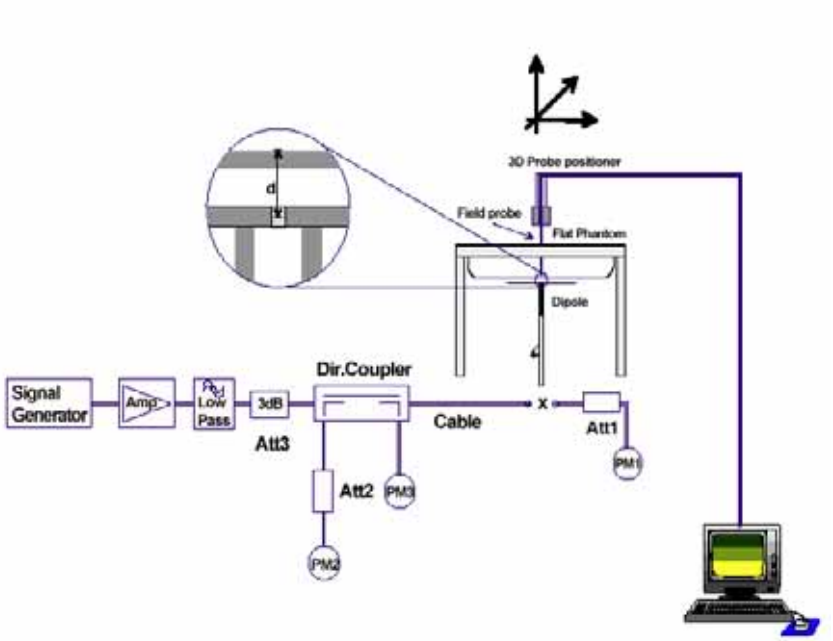

7 Detailed Test Results

7.1 Conducted power measurements

For the measurements a Rohde & Schwarz Radio Communication Tester CMU 200 was used.
The output power was measured using an integrated RF connector and attached RF cable.
The conducted output power was also checked before and after each SAR measurement. The resulting power values were within a 0.2 dB tolerance of the values shown below.

Note: CMU200 measures GSM peak and average output power for active timeslots.
For SAR the timebased average power is relevant. The difference inbetween depends on the duty cycle of the TDMA signal :

No. of timeslots	***1***	***2***	***3***	***4***
Duty Cycle	1 : 8	1: 4	1 : 2.66	1 : 2
timebased avg. power compared to slotted avg. power	- 9 dB	- 6 dB	- 4.25 dB	- 3 dB

The signalling modes differ as follows :

mode	***coding scheme***	***modulation***
GPRS	CS1 to CS4	GMSK
EGPRS (EDGE)	MCS1 to MCS4	GMSK
EGPRS (EDGE)	MCS5 to MCS9	8PSK

Apart from modulation change (GMSK/8PSK) coding schemes differ in code rate without influence on the RF signal. Therefore one coding scheme per mode was selected for conducted power measurements.

7.1.1 Conducted power measurements GSM 850 MHz

Channel / frequency	modulation	timeslots	slotted avg. power	time based avg. power (calculated)
128 / 824.2 MHz	GMSK	1	33.4 dBm	24.4 dBm
190 / 836.6 MHz	GMSK	1	33.4 dBm	24.4 dBm
251 / 848.0 MHz	GMSK	1	33.3 dBm	24.3 dBm
128 / 824.2 MHz	GMSK	2	30.3 dBm	24.3 dBm
190 / 836.6 MHz	GMSK	2	30.4 dBm	24.4 dBm
251 / 848.0 MHz	GMSK	2	30.4 dBm	24.4 dBm
128 / 824.2 MHz	GMSK	3	29.5 dBm	25.25 dBm
190 / 836.6 MHz	GMSK	3	29.6 dBm	25.35 dBm
251 / 848.0 MHz	GMSK	3	29.6 dBm	25.35 dBm
128 / 824.2 MHz	GMSK	4	28.6 dBm	**25.6 dBm**
190 / 836.6 MHz	GMSK	4	28.7 dBm	**25.7 dBm**
251 / 848.0 MHz	GMSK	4	28.6 dBm	**25.6 dBm**
128 / 824.2 MHz	8PSK	4	23.9 dBm	20.9 dBm
190 / 836.6 MHz	8PSK	4	24.0 dBm	21.0 dBm
251 / 848.0 MHz	8PSK	4	24.1 dBm	21.1 dBm

Table 9: Test results conducted power measurement GSM 850 MHz

7.1.2 Conducted power measurements GSM 1900 MHz

Channel / frequency	modulation	timeslots	slotted avg. power	time based avg. power (calculated)
512 / 1850.2 MHz	GMSK	1	30.6 dBm	21.6 dBm
661 / 1880.0 MHz	GMSK	1	30.5 dBm	21.5 dBm
810 / 1909.8 MHz	GMSK	1	30.3 dBm	21.3 dBm
512 / 1850.2 MHz	GMSK	2	28.4 dBm	22.4 dBm
661 / 1880.0 MHz	GMSK	2	28.4 dBm	22.4 dBm
810 / 1909.8 MHz	GMSK	2	28.4 dBm	22.4 dBm
512 / 1850.2 MHz	GMSK	3	27.3 dBm	23.05 dBm
661 / 1880.0 MHz	GMSK	3	27.4 dBm	23.15 dBm
810 / 1909.8 MHz	GMSK	3	27.3 dBm	23.05 dBm
512 / 1850.2 MHz	GMSK	4	26.3 dBm	**23.3 dBm**
661 / 1880.0 MHz	GMSK	4	26.4 dBm	**23.4 dBm**
810 / 1909.8 MHz	GMSK	4	26.4 dBm	**23.4 dBm**
512 / 1850.2 MHz	8PSK	4	22.8 dBm	19.8 dBm
661 / 1880.0 MHz	8PSK	4	22.8 dBm	19.8 dBm
810 / 1909.8 MHz	8PSK	4	22.8 dBm	19.8 dBm

Table 10: Test results conducted power measurement GSM 1900 MHz

7.1.3 Justification of SAR measurements in GSM mode

SAR measurements were performed in GPRS mode with 4 active timeslots because highest time based averaged output power was calculated for that configuration.
For comparison an additional delta measurement was performed with 1 timeslot in speech mode. In EDGE mode no delta measurement was performed.

7.1.4 Conducted power measurements WLAN 2.4 GHz

Channel / frequency	modulation	bit rate	timebased avg. power
1 / 2412 MHz	CCK	1 MBit/s	16.2 dBm
6 / 2437 MHz	CCK	1 MBit/s	16.2 dBm
11 / 2462 MHz	CCK	1 MBit/s	16.2 dBm
1 / 2412 MHz	OFDM	6 MBit/s	15.2 dBm
6 / 2437 MHz	OFDM	6 MBit/s	15.2 dBm
11 / 2462 MHz	OFDM	6 MBit/s	15.2 dBm
1 / 2412 MHz	OFDM	6.5 MBit/s	15.2 dBm
6 / 2437 MHz	OFDM	6.5 MBit/s	15.2 dBm
11 / 2462 MHz	OFDM	6.5 MBit/s	15.2 dBm

Table 11: Test results conducted power measurement WLAN 2.4 GHz

7.1.5 Multiple Transmitter Information

The following tables list information which is relevant for the decision if a simultaneous transmit evaluation is necessary according to KDB 648474.

Important abbreviations:

SPLSR: Antenna pair SAR to Peak Location Separation Ratio $(SAR_x + SAR_y)/L_{xy}$
P_{ref} : 12 mW at 2.4 GHz
Minimum antenna separation distance between main antenna and WLAN – **79 mm**

a) head position

Tx No.	Communcation system and frequency band	P_{avg} (mW)	single SAR (W/kg) (see ch. 7.2)	remarks
1a	GSM 850 MHz	250	1.150	routine evaluation
1b	GSM 1900 MHz	125	1.020	routine evaluation
2a	WLAN 2450 MHz	50	0.542	routine evaluation
2b	Bluetooth 2450 MHz	4.5	:=0	$P_2 < P_{ref}$
Sum of all 1g-SAR values			n/a	

Table 12: Communication systems and SAR values in head position

antenna pair (x,y)	peak-locations spacing L_{xy} (cm)	Σ 1g-SAR (W/kg)	$SPLSR_{xy}$	sim.-Tx SAR	remarks
(1a,2a)	5.66	1.637	0.289	N	ΣSAR > 1.6 W/kg but $SPLSR_{xy} < 0.3$
(1b,2a)	7.79	1.562	0.200	N	$SPLSR_{xy} < 0.3$ and ΣSAR < 1.6 W/kg

Table 13: Antenna distances and SPLSR evaluation in head position

SPLSRxy = SAR-to-(peak-locations spacing) ratio = (SARx+SARy)/Lxy

Σ 1g-SAR: sum of the highest SAR of Tx No. 1 and the SAR of Tx No. 2 at the same DUT position or orientation as the highest value of Tx No. 1 i.e. not necessarily the sum of the highest SAR values of both transmitters.

b) body position

Tx No.	Communcation system and frequency band	P_{avg} (mW)	single SAR (W/kg) (see ch. 7.2)	remarks
1a	GSM 850 MHz	1000	1.190	routine evaluation
1b	GSM 1900 MHz	500	1.070	routine evaluation
2a	WLAN 2450 MHz	50	0.253	routine evaluation
2b	Bluetooth 2450 MHz	4.5	:=0	$P_2 < P_{ref}$
Sum of all 1g-SAR values			n/a	

Table 14: Communication systems and SAR values in body position

antenna pair (x,y)	peak-locations spacing L_{xy} (cm)	Σ 1g-SAR (W/kg)	$SPLSR_{xy}$	sim.-Tx SAR	remarks
(1a,2a)	5.55	1.443	0.26	N	$SPLSR_{xy}$ < 0.3 and ΣSAR < 1.6 W/kg
(1b,2a)	7.63	1.323	0.17	N	$SPLSR_{xy}$ < 0.3 and ΣSAR < 1.6 W/kg

Table 15: Antenna distances and SPLSR evaluation in body position
SPLSRxy = SAR-to-(peak-locations spacing) ratio = (SARx+SARy)/Lxy

7.1.6 Mobile hotspot SAR measurement positions

Mobile hotspot SAR measurement positions						
mode	front	rear	left edge	right edge	top edge	bottom edge
GSM 850	yes	yes	yes	yes	no	yes
GSM 1900	yes	yes	yes	yes	no	yes
WCDMA FDD V 850	yes	yes	yes	yes	no	yes
WCDMA FDD V 1900	yes	yes	yes	yes	no	yes
WLAN 2450	yes	yes	no	yes	yes	no

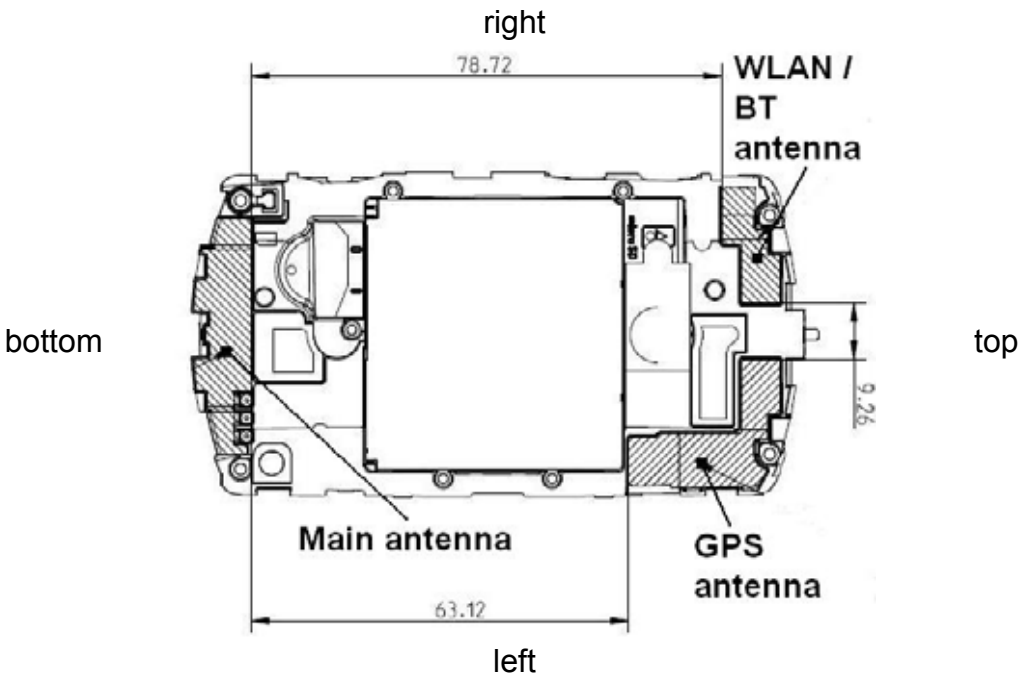

The edges with less than 2.5 cm distance to the TX antennas need to be tested for hotspot SAR.

7.2 SAR test results

7.2.1 Results overview

Head SAR GSM 850 MHz (averaged over 1g tissue volume)						
Channel / frequency	Position	Left hand test result	Right hand test result	Limit	Liquid temperature left	right
128 / 824.2 MHz	cheek	0.687 W/kg	0.725 W/kg	1.6 W/kg	23.2 °C	23.1 °C
190 / 836.6 MHz	cheek	0.909 W/kg	0.963 W/kg	1.6 W/kg	23.2 °C	23.1 °C
251 / 848.8 MHz	cheek	1.090 W/kg	**1.150 W/kg**	1.6 W/kg	23.2 °C	23.1 °C
128 / 824.2 MHz	tilted 15°	0.369 W/kg	0.314 W/kg	1.6 W/kg	23.2 °C	23.1 °C
190 / 836.6 MHz	tilted 15°	0.466 W/kg	0.424 W/kg	1.6 W/kg	23.2 °C	23.1 °C
251 / 848.8 MHz	tilted 15°	0.541 W/kg	0.577 W/kg	1.6 W/kg	23.2 °C	23.1 °C

Table 16: Test results head SAR GSM 850 MHz

Body SAR GSM 850 MHz (averaged over 1g tissue volume)						
Channel / frequency	Position	Distance	test condition	Body worn test result	Limit	Liquid temperature
128 / 824.2 MHz	front	10 mm	4 time slots	0.435 W/kg	1.6 W/kg	22.3 °C
190 / 836.6 MHz	front	10 mm	4 time slots	0.577 W/kg	1.6 W/kg	22.3 °C
251 / 848.8 MHz	front	10 mm	4 time slots	0.779 W/kg	1.6 W/kg	22.3 °C
128 / 824.2 MHz	rear	10 mm	4 time slots	0.712 W/kg	1.6 W/kg	22.3 °C
190 / 836.6 MHz	rear	10 mm	4 time slots	0.950 W/kg	1.6 W/kg	22.3 °C
251 / 848.8 MHz	rear	10 mm	4 time slots	**1.190 W/kg**	1.6 W/kg	22.3 °C
190 / 836.6 MHz	left	10 mm	4 time slots	0.334 W/kg	1.6 W/kg	22.3 °C
190 / 836.6 MHz	right	10 mm	4 time slots	0.376 W/kg	1.6 W/kg	22.3 °C
190 / 836.6 MHz	bottom	10 mm	4 time slots	0.088 W/kg	1.6 W/kg	22.3 °C
251 / 848.8 MHz	rear	15 mm	1 time slot	0.864 W/kg	1.6 W/kg	22.3 °C

Table 17: Test results body SAR GSM 850 MHz

Top edge position is not required since the distance from the main antenna to the edge is greater than 2.5 cm.

Head SAR GSM 1900 MHz (averaged over 1g tissue volume)						
Channel / frequency	Position	Left hand test result	Right hand test result	Limit	Liquid temperature left	right
512 / 1850.2 MHz	cheek	**1.020 W/kg**	0.906 W/kg	1.6 W/kg	22.5 °C	23.2 °C
661 / 1880.0 MHz	cheek	0.773 W/kg	0.700 W/kg	1.6 W/kg	22.5 °C	23.2 °C
810 / 1909.8 MHz	cheek	0.625 W/kg	0.621 W/kg	1.6 W/kg	22.5 °C	23.2 °C
512 / 1850.2 MHz	tilted 15°	0.392 W/kg	0.490 W/kg	1.6 W/kg	22.5 °C	23.2 °C
661 / 1880.0 MHz	tilted 15°	0.288 W/kg	0.402 W/kg	1.6 W/kg	22.5 °C	23.2 °C
810 / 1909.8 MHz	tilted 15°	0.246 W/kg	0.311 W/kg	1.6 W/kg	22.5 °C	23.2 °C

Table 18: Test results head SAR GSM 1900 MHz

Body SAR GSM 1900 MHz (averaged over 1g tissue volume)						
Channel / frequency	Position	Distance	test condition	Body worn test result	Limit	Liquid temperature
512 / 1850.2 MHz	front	10 mm	4 time slots	0.927 W/kg	1.6 W/kg	23.3 °C
661 / 1880.0 MHz	front	10 mm	4 time slots	0.668 W/kg	1.6 W/kg	23.3 °C
810 / 1909.8 MHz	front	10 mm	4 time slots	0.523 W/kg	1.6 W/kg	23.3 °C
512 / 1850.2 MHz	rear	10 mm	4 time slots	**1.070 W/kg**	1.6 W/kg	23.3 °C
661 / 1880.0 MHz	rear	10 mm	4 time slots	0.875 W/kg	1.6 W/kg	23.3 °C
810 / 1909.8 MHz	rear	10 mm	4 time slots	0.704 W/kg	1.6 W/kg	23.3 °C
661 / 1880.0 MHz	left	10 mm	4 time slots	0.270 W/kg	1.6 W/kg	23.3 °C
661 / 1880.0 MHz	right	10 mm	4 time slots	0.276 W/kg	1.6 W/kg	23.3 °C
661 / 1880.0 MHz	bottom	10 mm	4 time slots	0.414 W/kg	1.6 W/kg	23.3 °C
512 / 1850.2 MHz	rear	15 mm	1 time slot	0.369 W/kg	1.6 W/kg	23.3 °C

Table 19: Test results body SAR GSM 1900 MHz

Top edge position is not required since the distance from the main antenna to the edge is greater than 2.5 cm.

Head SAR WLAN 2450 MHz (averaged over 1g tissue volume)						
Channel / frequency	Position	Left hand test result	Right hand test result	Limit	Liquid temperature left	right
1 / 2412 MHz	cheek	**0.542 W/kg**	0.487 W/kg	2 W/kg	21.9 °C	21.9 °C
6 / 2437 MHz	cheek	0.297 W/kg	0.310 W/kg	2 W/kg	21.9 °C	21.9 °C
11 / 2462 MHz	cheek	0.187 W/kg	0.174 W/kg	2 W/kg	21.9 °C	21.9 °C
1 / 2412 MHz	tilted 15°	0.401 W/kg	0.450 W/kg	2 W/kg	21.9 °C	21.9 °C
6 / 2437 MHz	tilted 15°	0.253 W/kg	0.271 W/kg	2 W/kg	21.9 °C	21.9 °C
11 / 2462 MHz	tilted 15°	0.148 W/kg	0.167 W/kg	2 W/kg	21.9 °C	21.9 °C
1 / 2412 MHz	cheek OFDM 6Mbps	0.406 W/kg	--- W/kg	2 W/kg	21.9 °C	--- °C
1 / 2412 MHz	cheek OFDM 6.5	0.388 W/kg	--- W/kg	2 W/kg	21.9 °C	--- °C

Table 20: Test results head SAR WLAN 2450 MHz

Body SAR WLAN 2450 MHz (averaged over 1g tissue volume)						
Channel / frequency	Position	Distance	test condition	Body worn test result	Limit	Liquid temperature
1 / 2412 MHz	front	10 mm	CCK 1 Mbit/s	0.185 W/kg	1.6 W/kg	23.3 °C
6 / 2437 MHz	front	10 mm	CCK 1 Mbit/s	0.099 W/kg	1.6 W/kg	23.3 °C
11 / 2462 MHz	front	10 mm	CCK 1 Mbit/s	0.058 W/kg	1.6 W/kg	23.3 °C
1 / 2412 MHz	rear	10 mm	CCK 1 Mbit/s	**0.253 W/kg**	1.6 W/kg	23.3 °C
6 / 2437 MHz	rear	10 mm	CCK 1 Mbit/s	0.141 W/kg	1.6 W/kg	23.3 °C
11 / 2462 MHz	rear	10 mm	CCK 1 Mbit/s	0.103 W/kg	1.6 W/kg	23.3 °C
6 / 2437 MHz	left	10 mm	CCK 1 Mbit/s	0.054 W/kg	1.6 W/kg	23.3 °C
6 / 2437 MHz	right	10 mm	CCK 1 Mbit/s	0.114 W/kg	1.6 W/kg	23.3 °C
6 / 2437 MHz	top edge	10 mm	CCK 1 Mbit/s	0.086 W/kg	1.6 W/kg	23.3 °C
1 / 2412 MHz	rear	10 mm	OFDM 6Mbit/s	0.203 W/kg	1.6 W/kg	23.3 °C
1 / 2412 MHz	rear	10 mm	OFDM 6.5Mbit/s	0.199 W/kg	1.6 W/kg	23.3 °C

Table 21: Test results body SAR WLAN 2450 MHz

Bottom edge position is not required since the distance from the WLAN antenna to the edge is greater than 2.5cm.

Note:

The SAR test shall be performed at the high, middle and low frequency channels of each operating mode. If the SAR measured at mid-band channel for each test configuration is at least 3.0 dB lower than the SAR limit (< 0.8 W/kg), testing at the high and low channels is optional.
Per Oct 2010 TCB FCC Workshop, the edges with antennas within 2.5 cm are required to be evaluated for SAR to cover WLAN hot spot function.
Tests in body position were performed with 10 mm air gap between DUT and SAM. During the body tests the hotspot function was turned on, this function reduced automatically the output power.
The additional GSM body tests were performed at worst case with 1 time slot in uplink and 15 mm distance from DUT to the phantom in accordance with Sony Ericsson requirements.

7.2.2 General description of test procedures

The DUT is tested using a CMU 200 communications tester as controller unit to set test channels and maximum output power to the DUT, as well as for measuring the conducted peak power.
Test positions as described in the tables above are in accordance with the specified test standard.
Tests in body position were performed in that configuration, which generates the highest time based averaged output power (see conducted power results).
Tests in head position with GSM were performed in voice mode with 1 timeslot unless GPRS/EGPRS/DTM function allows parallel voice and data traffic on 2 or more timeslots (see section 2.4 for details).
UMTS was tested in RMC mode with 12.2 kbit/s and TPC bits set to ‘all 1’.
WLAN was tested in 802.11b mode with 1 MBit/s with the delta measurements in 802.11g and 802.11n modes on worst case position.

8 Test equipment and ancillaries used for tests

To simplify the identification of the test equipment and/or ancillaries which were used, the reporting of the relevant test cases only refer to the test item number as specified in the table below.

No	used	Equipment	Type	Manufacturer	Serial No.	Last Calibration	Frequency (months)
1	☒	Dosimetric E-Field Probe	ET3DV6	Schmid & Partner Engineering AG	1554	May 11, 2011	12
2	☒	Dosimetric E-Field Probe	ET3DV6	Schmid & Partner Engineering AG	1559	January 19, 2011	12
3	☒	900 MHz System Validation Dipole	D900V2	Schmid & Partner Engineering AG	102	August 16, 2010	12
4	☐	1800 MHz System Validation Dipole	D1800V2	Schmid & Partner Engineering AG	287	August 17, 2010	12
5	☒	1900 MHz System Validation Dipole	D1900V2	Schmid & Partner Engineering AG	531	August 17, 2010	12
6	☒	2450 MHz System Validation Dipole	D2450V2	Schmid & Partner Engineering AG	710	August 19, 2010	12
7	☒	Data acquisition electronics	DAE3V1	Schmid & Partner Engineering AG	413	January 13, 2011	12
8	☒	Data acquisition electronics	DAE3V1	Schmid & Partner Engineering AG	477	May 04, 2011	12
9	☒	Software	DASY 4 V4.5	Schmid & Partner Engineering AG	---	N/A	--
10	☒	Phantom	SAM	Schmid & Partner Engineering AG	---	N/A	--
11	☒	Universal Radio Communication Tester	CMU 200	Rohde & Schwarz	106826	January 12, 2011	12
12	☒	Network Analyser 300 kHz to 6 GHz	8753ES	Hewlett Packard)*	US39174436	July 6, 2010	12
13	☒	Dielectric Probe Kit	85070C	Hewlett Packard	US99360146	N/A	12
14	☒	Signal Generator	8665A	Hewlett Packard	2833A00112	January 6, 2011	12
15	☒	Amplifier	25S1G4 (25 Watt)	Amplifier Reasearch	20452	N/A	--
16	☒	Power Meter	NRP	Rohde & Schwarz	101367	January 6, 2011	12
17	☒	Power Meter Sensor	NRP Z22	Rohde & Schwarz	100227	January 6, 2011	12
18	☒	Power Meter Sensor	NRP Z22	Rohde & Schwarz	100234	January 6, 2011	12

)* : Network analyzer probe calibration against air, distilled water and a shorting block performed before measuring liquid parameters.

9 Observations

No observations exceeding those reported with the single test cases have been made.

Annex A: System performance verification

Date/Time: 08.08.2011 14:31:07Date/Time: 08.08.2011 14:34:39

SystemPerformanceCheck-D900 head 2011-08-08

DUT: Dipole 900 MHz; Type: D900V2; Serial: 102
Communication System: CW; Frequency: 900 MHz; Duty Cycle: 1:1
Medium: HSL850 Medium parameters used: f = 900 MHz; σ = 0.95 mho/m; ε_r = 42.3; ρ = 1000 kg/m^3
Phantom section: Flat Section
DASY4 Configuration:
- Probe: ET3DV6 - SN1554; ConvF(6.89, 6.89, 6.89); Calibrated: 11.05.2011
- Sensor-Surface: 4mm (Mechanical And Optical Surface Detection)
- Electronics: DAE3 Sn413; Calibrated: 13.01.2011
- Phantom: SAM 12; Type: SAM; Serial: 1043
- Measurement SW: DASY4, V4.5 Build 19; Postprocessing SW: SEMCAD, V1.8 Build 146

d=15mm, Pin=1000mW/Area Scan (51x51x1): Measurement grid: dx=15mm, dy=15mm

Maximum value of SAR (interpolated) = 11.2 mW/g

d=15mm, Pin=1000mW/Zoom Scan (7x7x7) (7x7x7)/Cube 0: Measurement grid: dx=5mm, dy=5mm, dz=5mm

Reference Value = 112.4 V/m; Power Drift = -0.019 dB
Peak SAR (extrapolated) = 15.9 W/kg
SAR(1 g) = 10.5 mW/g; SAR(10 g) = 6.74 mW/g
Maximum value of SAR (measured) = 11.4 mW/g

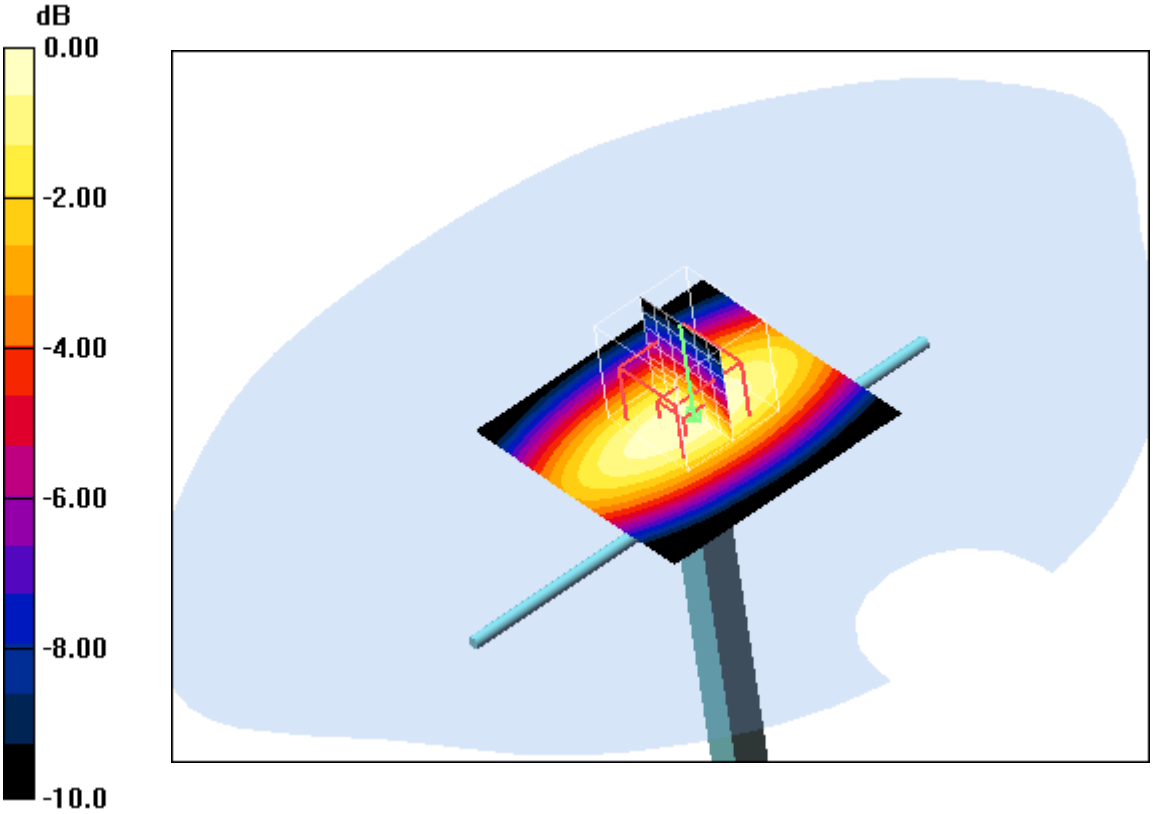

0 dB = 11.4mW/g

Additional information:
ambient temperature: 23.5°C; liquid temperature: 23.1°C

Date/Time: 03.08.2011 08:17:20Date/Time: 03.08.2011 08:20:53

SystemPerformanceCheck-D900 body 2011-08-03

DUT: Dipole 900 MHz; Type: D900V2; Serial: 102
Communication System: CW; Frequency: 900 MHz; Duty Cycle: 1:1
Medium: M850 Medium parameters used: f = 900 MHz; σ = 1.05 mho/m; ε_r = 54.1; ρ = 1000 kg/m^3
Phantom section: Flat Section
DASY4 Configuration:
- Probe: ET3DV6 - SN1554; ConvF(6.75, 6.75, 6.75); Calibrated: 11.05.2011
- Sensor-Surface: 4mm (Mechanical And Optical Surface Detection)
- Electronics: DAE3 Sn413; Calibrated: 13.01.2011
- Phantom: SAM 12; Type: SAM; Serial: 1043
- Measurement SW: DASY4, V4.5 Build 19; Postprocessing SW: SEMCAD, V1.8 Build 146

d=15mm, Pin=1000mW/Area Scan (51x51x1): Measurement grid: dx=15mm, dy=15mm
Maximum value of SAR (interpolated) = 12.1 mW/g

d=15mm, Pin=1000mW/Zoom Scan (7x7x7) (7x7x7)/Cube 0: Measurement grid: dx=5mm, dy=5mm, dz=5mm
Reference Value = 111.1 V/m; Power Drift = -0.031 dB
Peak SAR (extrapolated) = 15.8 W/kg
SAR(1 g) = 11.1 mW/g; SAR(10 g) = 7.22 mW/g
Maximum value of SAR (measured) = 11.9 mW/g

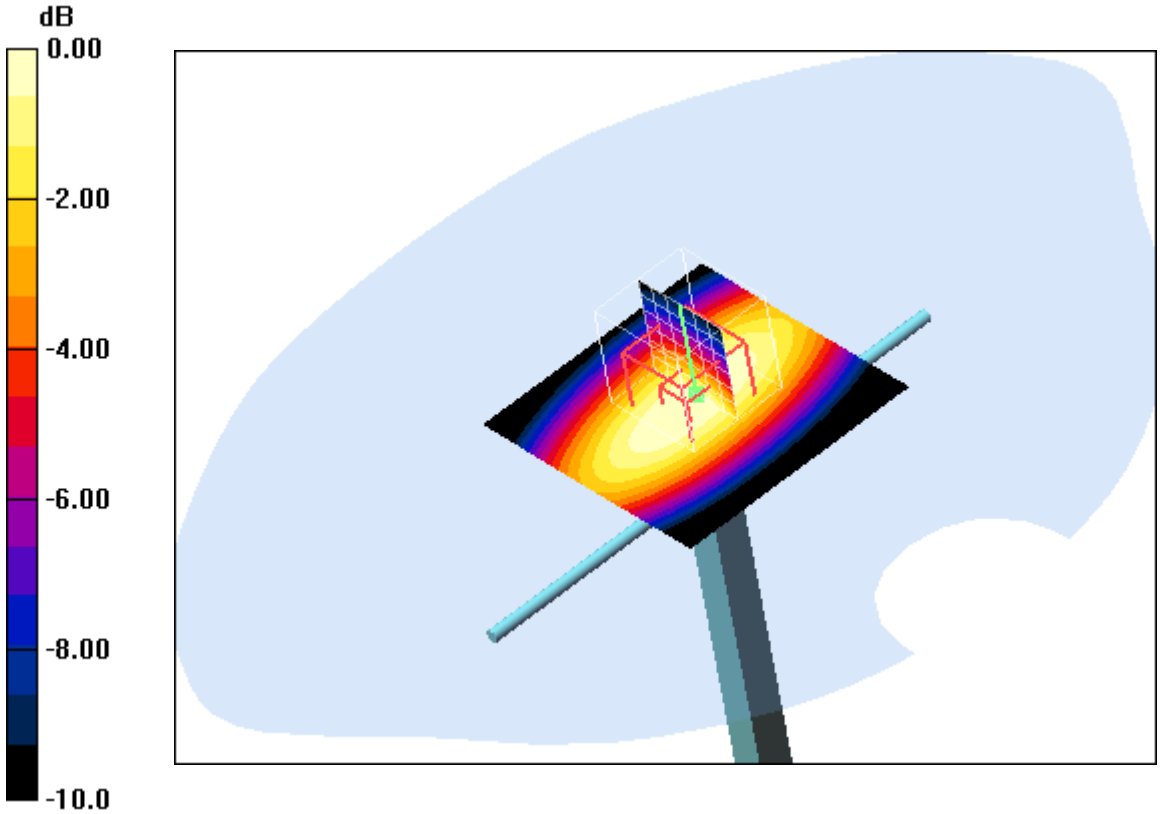

0 dB = 11.9mW/g

Additional information:
ambient temperature: 23.6°C; liquid temperature: 23.2°C

Date/Time: 04.08.2011 06:38:24Date/Time: 04.08.2011 06:41:53

SystemPerformanceCheck-D900 body 2011-08-04

DUT: Dipole 900 MHz; Type: D900V2; Serial: 102
Communication System: CW; Frequency: 900 MHz; Duty Cycle: 1:1
Medium: M850 Medium parameters used: f = 900 MHz; σ = 1.05 mho/m; ε_r = 54.1; ρ = 1000 kg/m^3
Phantom section: Flat Section
DASY4 Configuration:
- Probe: ET3DV6 - SN1554; ConvF(6.75, 6.75, 6.75); Calibrated: 11.05.2011
- Sensor-Surface: 4mm (Mechanical And Optical Surface Detection)
- Electronics: DAE3 Sn413; Calibrated: 13.01.2011
- Phantom: SAM 12; Type: SAM; Serial: 1043
- Measurement SW: DASY4, V4.5 Build 19; Postprocessing SW: SEMCAD, V1.8 Build 146

d=15mm, Pin=1000mW/Area Scan (51x51x1): Measurement grid: dx=15mm, dy=15mm
Maximum value of SAR (interpolated) = 11.7 mW/g

d=15mm, Pin=1000mW/Zoom Scan (7x7x7) (7x7x7)/Cube 0: Measurement grid: dx=5mm, dy=5mm, dz=5mm
Reference Value = 109.3 V/m; Power Drift = -0.01 dB
Peak SAR (extrapolated) = 15.7 W/kg
SAR(1 g) = 10.8 mW/g; SAR(10 g) = 7.06 mW/g
Maximum value of SAR (measured) = 11.7 mW/g

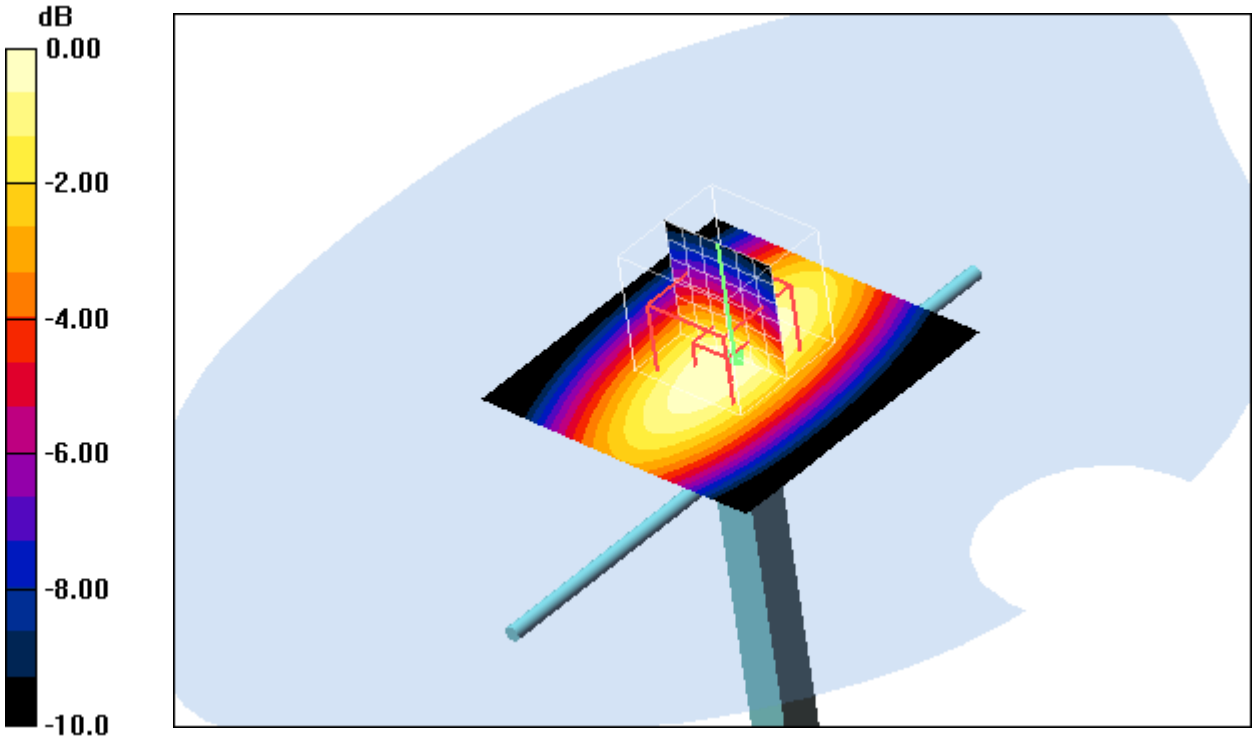

0 dB = 11.7mW/g

Additional information:
ambient temperature: 22.9°C; liquid temperature: 22.3°C

Date/Time: 08.08.2011 13:06:49Date/Time: 08.08.2011 13:10:18

SystemPerformanceCheck-D1900 Head 2011-08-08

DUT: Dipole 1900 MHz; Type: D1900V2; Serial: 5d009
Communication System: CW; Frequency: 1900 MHz; Duty Cycle: 1:1
Medium: HSL1900 Medium parameters used: f = 1900 MHz; σ = 1.38 mho/m; ε_r = 40; ρ = 1000 kg/m^3
Phantom section: Flat Section
DASY4 Configuration:
- Probe: ET3DV6 - SN1554; ConvF(5.16, 5.16, 5.16); Calibrated: 11.05.2011
- Sensor-Surface: 4mm (Mechanical And Optical Surface Detection)
- Electronics: DAE3 Sn413; Calibrated: 13.01.2011
- Phantom: SAM 12; Type: SAM; Serial: 1043
- Measurement SW: DASY4, V4.5 Build 19; Postprocessing SW: SEMCAD, V1.8 Build 146

d=10mm, Pin=1000mW/Area Scan (51x51x1): Measurement grid: dx=15mm, dy=15mm

Maximum value of SAR (interpolated) = 49.3 mW/g

d=10mm, Pin=1000mW/Zoom Scan (7x7x7) (7x7x7)/Cube 0: Measurement grid: dx=5mm, dy=5mm, dz=5mm

Reference Value = 180.7 V/m; Power Drift = -0.033 dB
Peak SAR (extrapolated) = 66.5 W/kg
SAR(1 g) = 35.9 mW/g; SAR(10 g) = 19.1 mW/g
Maximum value of SAR (measured) = 40.6 mW/g

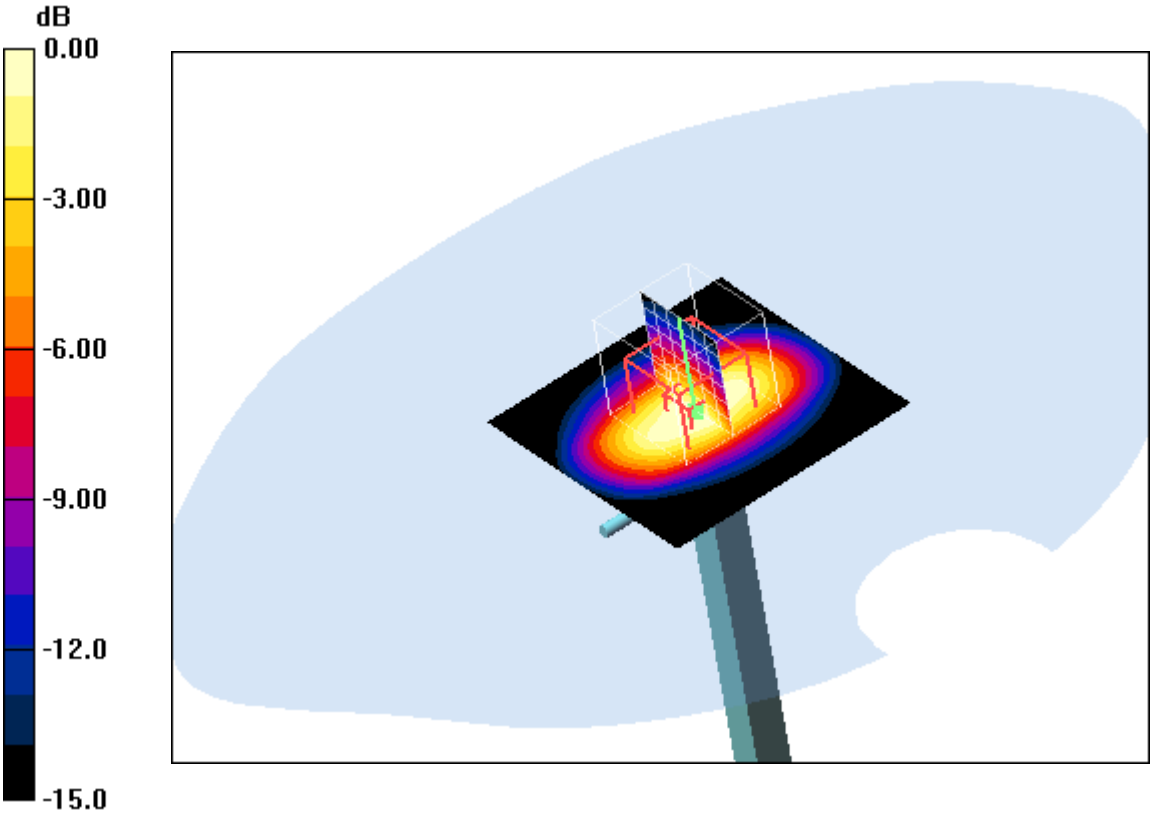

0 dB = 40.6mW/g

Additional information:
ambient temperature: 23.4°C; liquid temperature: 22.5°C

Date/Time: 04.08.2011 10:01:26Date/Time: 04.08.2011 10:04:57

SystemPerformanceCheck-D1900 body 2011-08-04

DUT: Dipole 1900 MHz; Type: D1900V2; Serial: 5d009
Communication System: CW; Frequency: 1900 MHz; Duty Cycle: 1:1
Medium: M1900 Medium parameters used: f = 1900 MHz; σ = 1.51 mho/m; ε_r = 52.6; ρ = 1000 kg/m^3
Phantom section: Flat Section
DASY4 Configuration:
- Probe: ET3DV6 - SN1554; ConvF(4.42, 4.42, 4.42); Calibrated: 11.05.2011
- Sensor-Surface: 4mm (Mechanical And Optical Surface Detection)
- Electronics: DAE3 Sn413; Calibrated: 13.01.2011
- Phantom: SAM 12; Type: SAM; Serial: 1043
- Measurement SW: DASY4, V4.5 Build 19; Postprocessing SW: SEMCAD, V1.8 Build 146

d=10mm, Pin=1000mW/Area Scan (51x51x1): Measurement grid: dx=15mm, dy=15mm
Maximum value of SAR (interpolated) = 57.4 mW/g

d=10mm, Pin=1000mW/Zoom Scan (7x7x7) (7x7x7)/Cube 0: Measurement grid: dx=5mm, dy=5mm, dz=5mm
Reference Value = 182.0 V/m; Power Drift = 0.011 dB
Peak SAR (extrapolated) = 64.6 W/kg
SAR(1 g) = 39.2 mW/g; SAR(10 g) = 21.3 mW/g
Maximum value of SAR (measured) = 44.5 mW/g

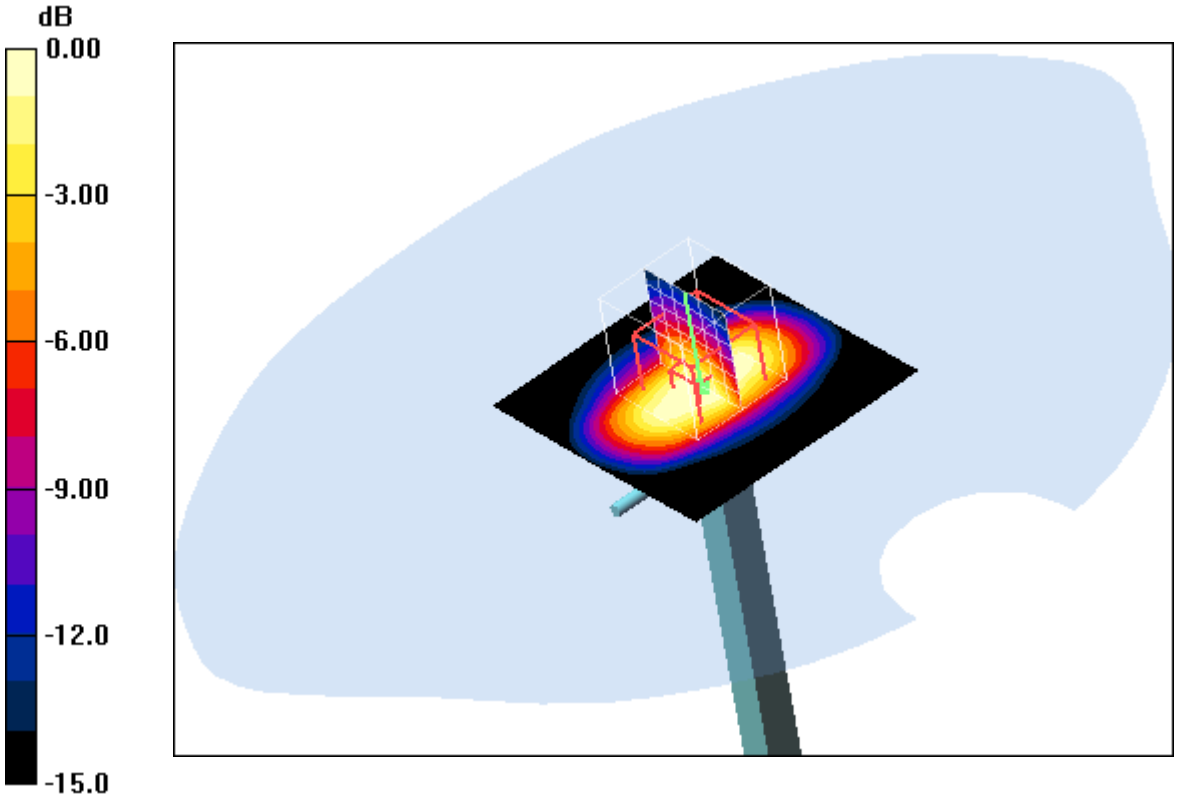

0 dB = 44.5mW/g

Additional information:
ambient temperature: 23.7°C; liquid temperature: 23.3°C

Date/Time: 16.08.2011 08:05:11Date/Time: 16.08.2011 08:09:12

SystemPerformanceCheck-D2450 head 2011-08-16

DUT: Dipole 2450 MHz; Type: D2450V2; Serial: 710
Communication System: CW; Frequency: 2450 MHz; Duty Cycle: 1:1
Medium: HSL2450 Medium parameters used: f = 2450 MHz; σ = 1.85 mho/m; ε_r = 39.3; ρ = 1000 kg/m^3
Phantom section: Flat Section
DASY4 Configuration:
- Probe: ET3DV6 - SN1559; ConvF(4.38, 4.38, 4.38); Calibrated: 19.01.2011
- Sensor-Surface: 4mm (Mechanical And Optical Surface Detection)
- Electronics: DAE3 Sn477; Calibrated: 04.05.2011
- Phantom: SAM left; Type: SAM; Serial: 1041
- Measurement SW: DASY4, V4.7 Build 71; Postprocessing SW: SEMCAD, V1.8 Build 146

d=10mm, Pin=1000mW/Area Scan (51x51x1): Measurement grid: dx=15mm, dy=15mm
Maximum value of SAR (interpolated) = 75.8 mW/g

d=10mm, Pin=1000mW/Zoom Scan (7x7x7) (7x7x7)/Cube 0: Measurement grid: dx=5mm, dy=5mm, dz=5mm
Reference Value = 191.3 V/m; Power Drift = -0.122 dB
Peak SAR (extrapolated) = 103.4 W/kg
SAR(1 g) = 51.9 mW/g; SAR(10 g) = 24.6 mW/g
Maximum value of SAR (measured) = 59.1 mW/g

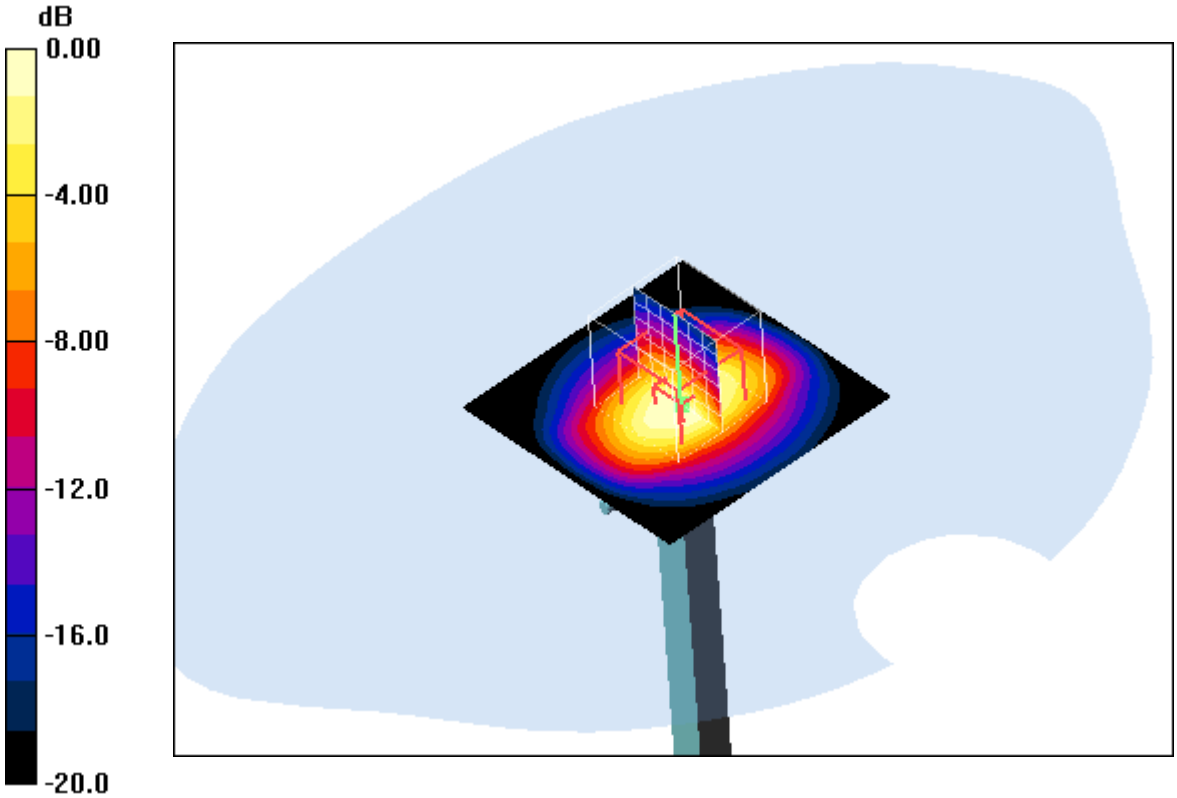

0 dB = 59.1mW/g

Additional information:
ambient temperature: 22.3°C; liquid temperature: 21.9°C

Date/Time: 17.08.2011 08:24:06Date/Time: 17.08.2011 08:27:58

SystemPerformanceCheck-D2450 body 2011-08-17

DUT: Dipole 2450 MHz; Type: D2450V2; Serial: 710
Communication System: CW; Frequency: 2450 MHz; Duty Cycle: 1:1
Medium: M2450 Medium parameters used: f = 2450 MHz; σ = 1.99 mho/m; ε_r = 51.7; ρ = 1000 kg/m^3
Phantom section: Flat Section
DASY4 Configuration:
- Probe: ET3DV6 - SN1559; ConvF(3.91, 3.91, 3.91); Calibrated: 19.01.2011
- Sensor-Surface: 4mm (Mechanical And Optical Surface Detection)
- Electronics: DAE3 Sn477; Calibrated: 04.05.2011
- Phantom: SAM right; Type: SAM; Serial: 1042
- Measurement SW: DASY4, V4.7 Build 71; Postprocessing SW: SEMCAD, V1.8 Build 146

d=10mm, Pin=1000mW/Area Scan (51x51x1): Measurement grid: dx=15mm, dy=15mm

Maximum value of SAR (interpolated) = 77.4 mW/g

d=10mm, Pin=1000mW/Zoom Scan (7x7x7) (7x7x7)/Cube 0: Measurement grid: dx=5mm, dy=5mm, dz=5mm

Reference Value = 184.7 V/m; Power Drift = -0.122 dB
Peak SAR (extrapolated) = 95.4 W/kg
SAR(1 g) = 49.5 mW/g; SAR(10 g) = 24.5 mW/g
Maximum value of SAR (measured) = 57.6 mW/g

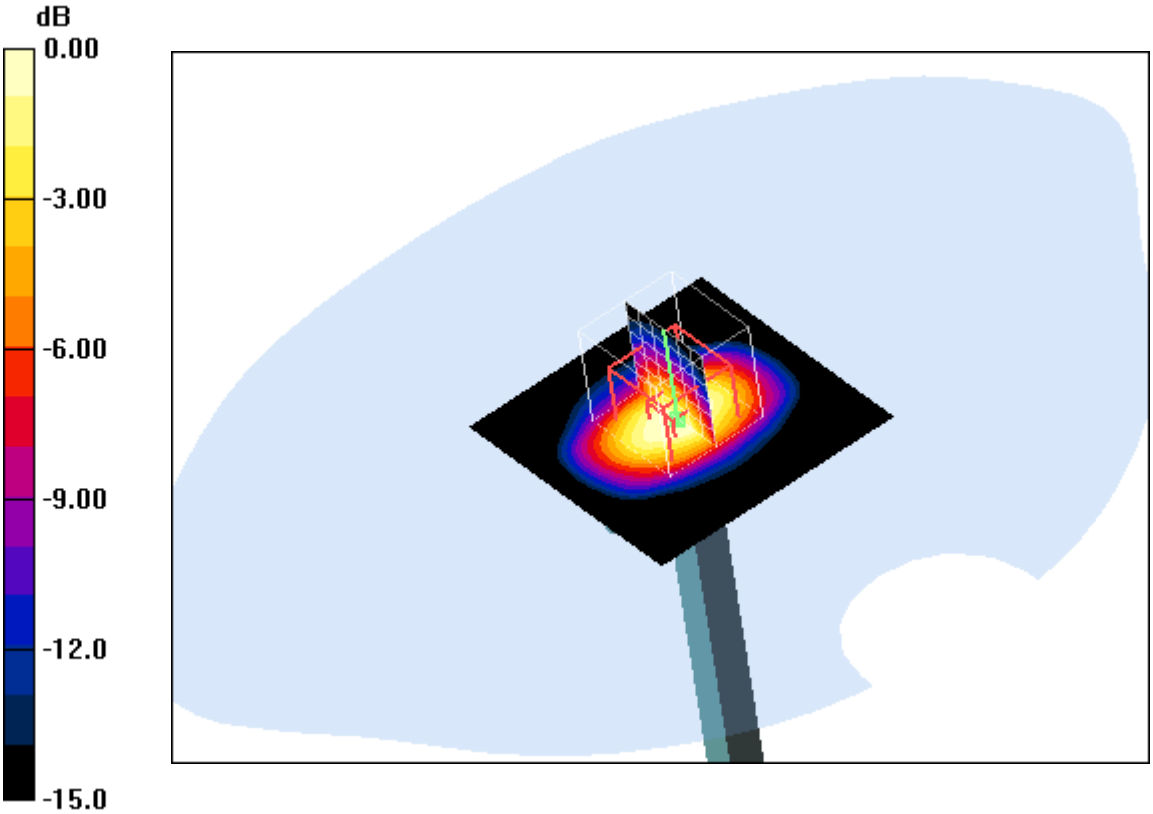

0 dB = 57.6mW/g

Additional information:
ambient temperature: 23.9°C; liquid temperature: 23.3°C

Annex B: DASY4 measurement results

Annex B.1: GSM 850MHz head

Date/Time: 08.08.2011 19:31:19Date/Time: 08.08.2011 19:39:06

IEEE1528_OET65-LeftHandSide-GSM850

DUT: Sony Ericsson; Type: AAD-3880123-BV; Serial: BX902GJNRZ
Communication System: GSM 850; Frequency: 824.2 MHz; Duty Cycle: 1:8
Medium: HSL850 Medium parameters used: f = 824.2 MHz; σ = 0.87 mho/m; ε_r = 43.2; ρ = 1000 kg/m^3
Phantom section: Left Section
DASY4 Configuration:
- Probe: ET3DV6 - SN1554; ConvF(6.89, 6.89, 6.89); Calibrated: 11.05.2011
- Sensor-Surface: 4mm (Mechanical And Optical Surface Detection)
- Electronics: DAE3 Sn413; Calibrated: 13.01.2011
- Phantom: SAM 12; Type: SAM; Serial: 1043
- Measurement SW: DASY4, V4.5 Build 19; Postprocessing SW: SEMCAD, V1.8 Build 146

Touch position - Low/Area Scan (51x81x1): Measurement grid: dx=15mm, dy=15mm
Maximum value of SAR (interpolated) = 0.721 mW/g

Touch position - Low/Zoom Scan (7x7x7) (7x7x7)/Cube 0: Measurement grid: dx=5mm, dy=5mm, dz=5mm
Reference Value = 28.7 V/m; Power Drift = -0.037 dB
Peak SAR (extrapolated) = 1.07 W/kg
SAR(1 g) = 0.687 mW/g; SAR(10 g) = 0.462 mW/g
Maximum value of SAR (measured) = 0.735 mW/g

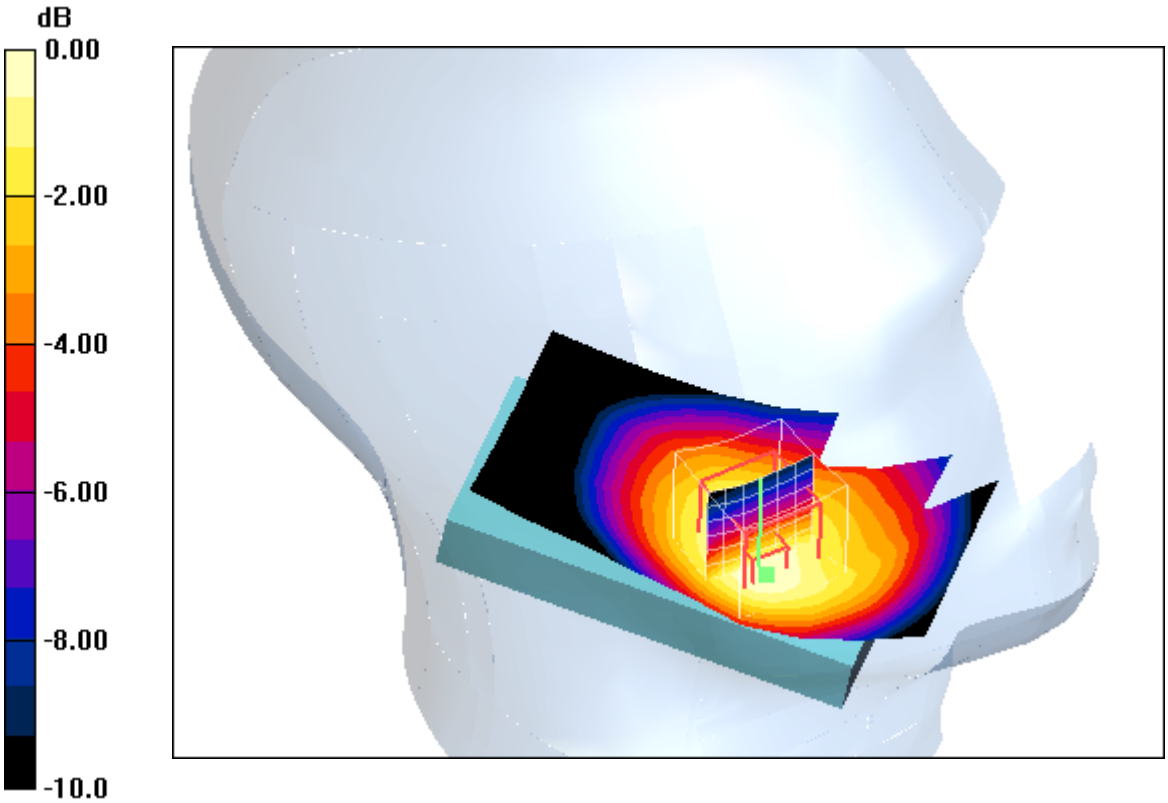

0 dB = 0.735mW/g

Additional information:
ambient temperature: 23.5°C; liquid temperature: 23.2°C

Date/Time: 08.08.2011 19:54:10Date/Time: 08.08.2011 20:01:29

IEEE1528_OET65-LeftHandSide-GSM850

DUT: Sony Ericsson; Type: AAD-3880123-BV; Serial: BX902GJNRZ
Communication System: GSM 850; Frequency: 836.6 MHz; Duty Cycle: 1:8
Medium: HSL850 Medium parameters used: f = 836.6 MHz; σ = 0.89 mho/m; ε_r = 43; ρ = 1000 kg/m^3
Phantom section: Left Section
DASY4 Configuration:
- Probe: ET3DV6 - SN1554; ConvF(6.89, 6.89, 6.89); Calibrated: 11.05.2011
- Sensor-Surface: 4mm (Mechanical And Optical Surface Detection)
- Electronics: DAE3 Sn413; Calibrated: 13.01.2011
- Phantom: SAM 12; Type: SAM; Serial: 1043
- Measurement SW: DASY4, V4.5 Build 19; Postprocessing SW: SEMCAD, V1.8 Build 146

Touch position - Middle/Area Scan (51x81x1): Measurement grid: dx=15mm, dy=15mm
Maximum value of SAR (interpolated) = 0.954 mW/g

Touch position - Middle/Zoom Scan (7x7x7) (7x7x7)/Cube 0: Measurement grid: dx=5mm, dy=5mm, dz=5mm
Reference Value = 32.8 V/m; Power Drift = -0.052 dB
Peak SAR (extrapolated) = 1.38 W/kg
SAR(1 g) = 0.909 mW/g; SAR(10 g) = 0.615 mW/g
Maximum value of SAR (measured) = 0.964 mW/g

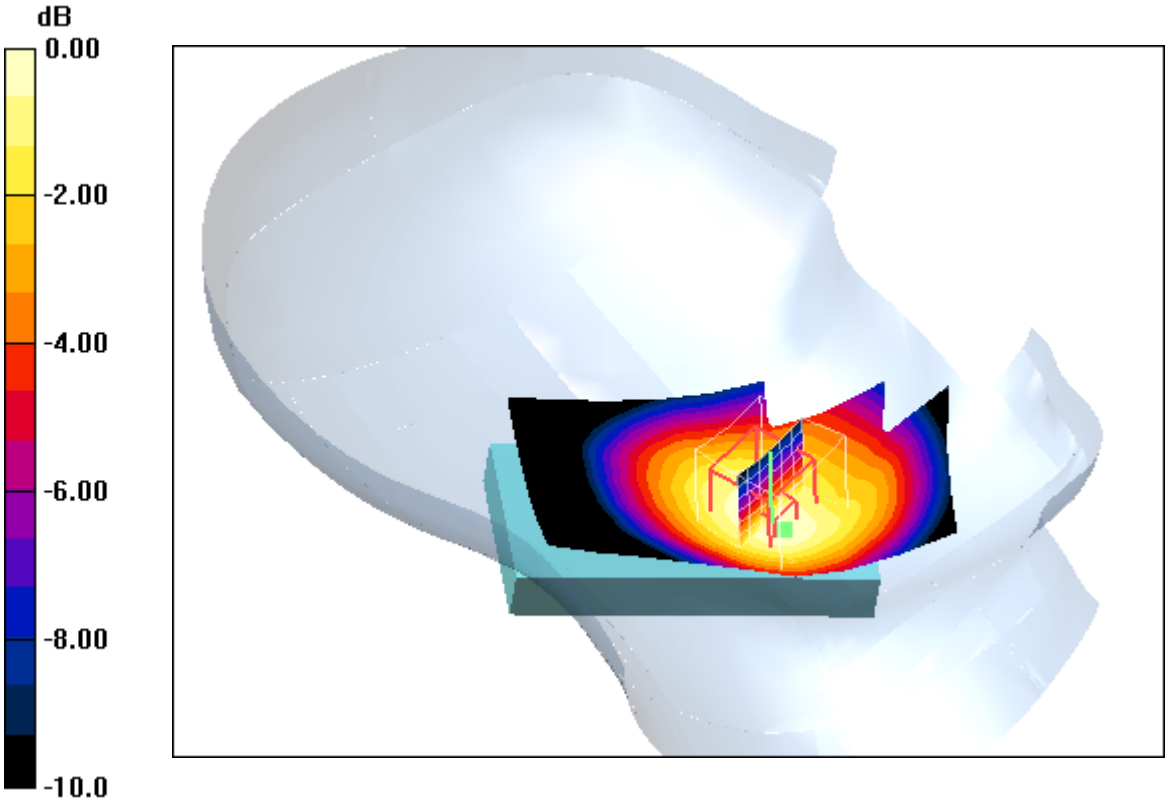

0 dB = 0.964mW/g

Additional information:
ambient temperature: 23.5°C; liquid temperature: 23.2°C

Date/Time: 08.08.2011 20:16:07Date/Time: 08.08.2011 20:25:11

IEEE1528_OET65-LeftHandSide-GSM850

DUT: Sony Ericsson; Type: AAD-3880123-BV; Serial: BX902GJNRZ
Communication System: GSM 850; Frequency: 848.8 MHz; Duty Cycle: 1:8
Medium: HSL850 Medium parameters used: f = 848.8 MHz; σ = 0.9 mho/m; ε_r = 42.9; ρ = 1000 kg/m^3
Phantom section: Left Section
DASY4 Configuration:
- Probe: ET3DV6 - SN1554; ConvF(6.89, 6.89, 6.89); Calibrated: 11.05.2011
- Sensor-Surface: 4mm (Mechanical And Optical Surface Detection)
- Electronics: DAE3 Sn413; Calibrated: 13.01.2011
- Phantom: SAM 12; Type: SAM; Serial: 1043
- Measurement SW: DASY4, V4.5 Build 19; Postprocessing SW: SEMCAD, V1.8 Build 146

Touch position - High/Area Scan (51x81x1): Measurement grid: dx=15mm, dy=15mm
Maximum value of SAR (interpolated) = 1.13 mW/g

Touch position - High/Zoom Scan (7x7x7) (7x7x7)/Cube 0: Measurement grid: dx=5mm, dy=5mm, dz=5mm
Reference Value = 35.8 V/m; Power Drift = -0.046 dB
Peak SAR (extrapolated) = 1.64 W/kg
SAR(1 g) = 1.09 mW/g; SAR(10 g) = 0.740 mW/g
Maximum value of SAR (measured) = 1.17 mW/g

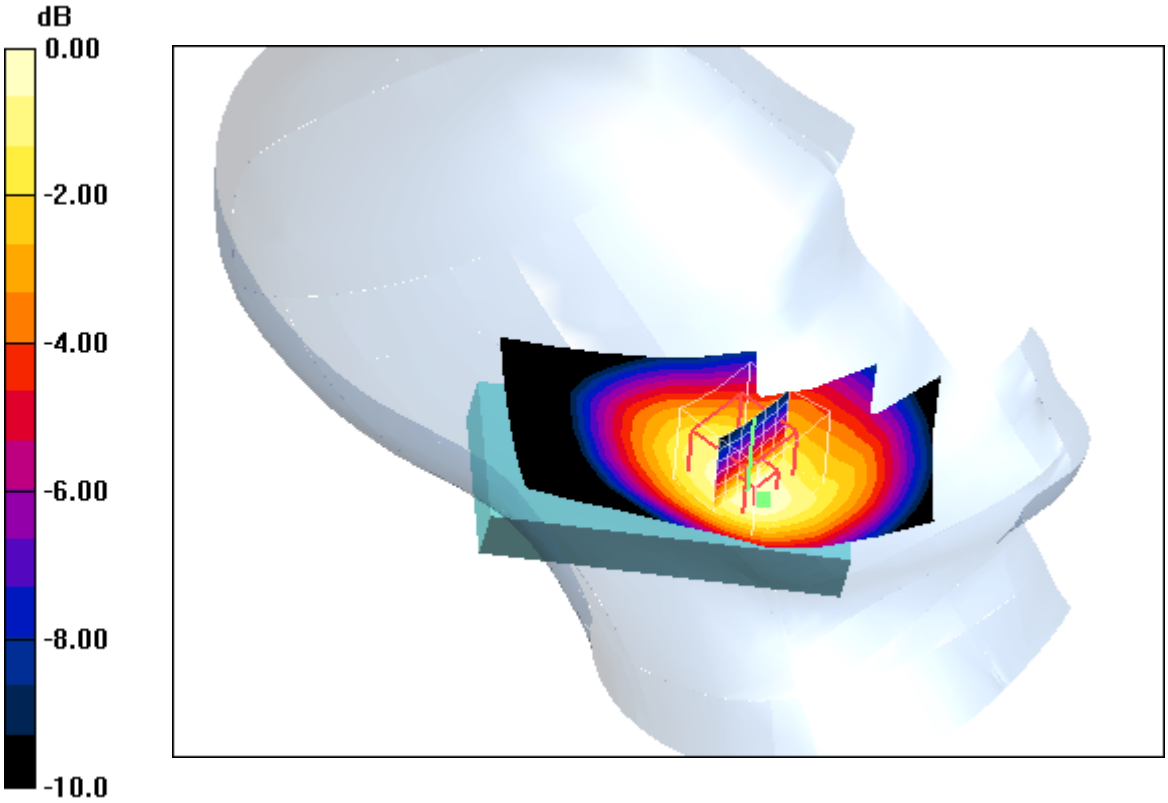

0 dB = 1.17mW/g

Additional information:
ambient temperature: 23.5°C; liquid temperature: 23.2°C

Date/Time: 08.08.2011 18:31:05Date/Time: 08.08.2011 18:38:31

IEEE1528_OET65-LeftHandSide-GSM850

DUT: Sony Ericsson; Type: AAD-3880123-BV; Serial: BX902GJNRZ
Communication System: GSM 850; Frequency: 824.2 MHz; Duty Cycle: 1:8
Medium: HSL850 Medium parameters used: f = 824.2 MHz; σ = 0.87 mho/m; ε_r = 43.2; ρ = 1000 kg/m^3
Phantom section: Left Section
DASY4 Configuration:
- Probe: ET3DV6 - SN1554; ConvF(6.89, 6.89, 6.89); Calibrated: 11.05.2011
- Sensor-Surface: 4mm (Mechanical And Optical Surface Detection)
- Electronics: DAE3 Sn413; Calibrated: 13.01.2011
- Phantom: SAM 12; Type: SAM; Serial: 1043
- Measurement SW: DASY4, V4.5 Build 19; Postprocessing SW: SEMCAD, V1.8 Build 146

Tilt position - Low/Area Scan (51x81x1): Measurement grid: dx=15mm, dy=15mm
Maximum value of SAR (interpolated) = 0.401 mW/g

Tilt position - Low/Zoom Scan (7x7x7) (7x7x7)/Cube 0: Measurement grid: dx=5mm, dy=5mm, dz=5mm
Reference Value = 21.4 V/m; Power Drift = -0.132 dB
Peak SAR (extrapolated) = 0.455 W/kg
SAR(1 g) = 0.369 mW/g; SAR(10 g) = 0.275 mW/g
Maximum value of SAR (measured) = 0.387 mW/g

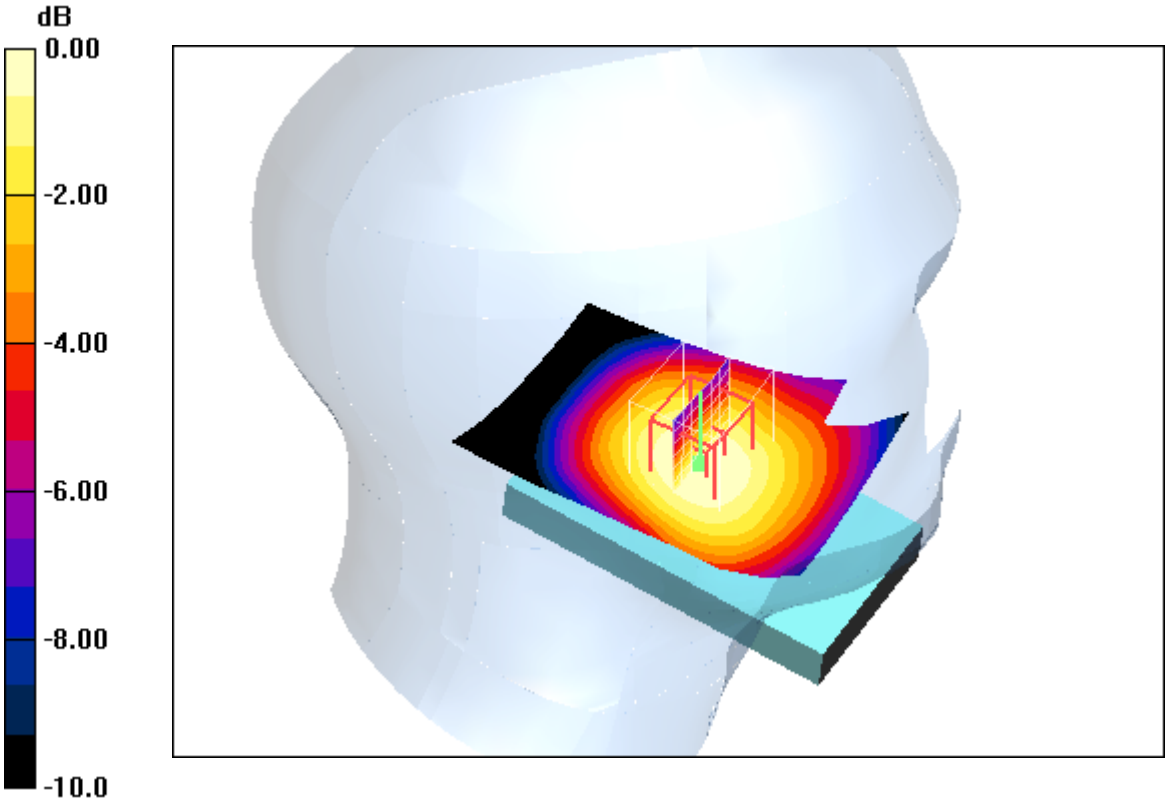

0 dB = 0.387mW/g

Additional information:
ambient temperature: 23.5°C; liquid temperature: 23.2°C

Date/Time: 08.08.2011 18:51:43Date/Time: 08.08.2011 18:57:29

IEEE1528_OET65-LeftHandSide-GSM850

DUT: Sony Ericsson; Type: AAD-3880123-BV; Serial: BX902GJNRZ
Communication System: GSM 850; Frequency: 836.6 MHz; Duty Cycle: 1:8
Medium: HSL850 Medium parameters used: f = 836.6 MHz; σ = 0.89 mho/m; ε_r = 43; ρ = 1000 kg/m^3
Phantom section: Left Section
DASY4 Configuration:
- Probe: ET3DV6 - SN1554; ConvF(6.89, 6.89, 6.89); Calibrated: 11.05.2011
- Sensor-Surface: 4mm (Mechanical And Optical Surface Detection)
- Electronics: DAE3 Sn413; Calibrated: 13.01.2011
- Phantom: SAM 12; Type: SAM; Serial: 1043
- Measurement SW: DASY4, V4.5 Build 19; Postprocessing SW: SEMCAD, V1.8 Build 146

Tilt position - Middle/Area Scan (51x81x1): Measurement grid: dx=15mm, dy=15mm
Maximum value of SAR (interpolated) = 0.500 mW/g

Tilt position - Middle/Zoom Scan (7x7x7) (7x7x7)/Cube 0: Measurement grid: dx=5mm, dy=5mm, dz=5mm
Reference Value = 23.7 V/m; Power Drift = -0.00 dB
Peak SAR (extrapolated) = 0.579 W/kg
SAR(1 g) = 0.466 mW/g; SAR(10 g) = 0.346 mW/g
Maximum value of SAR (measured) = 0.488 mW/g

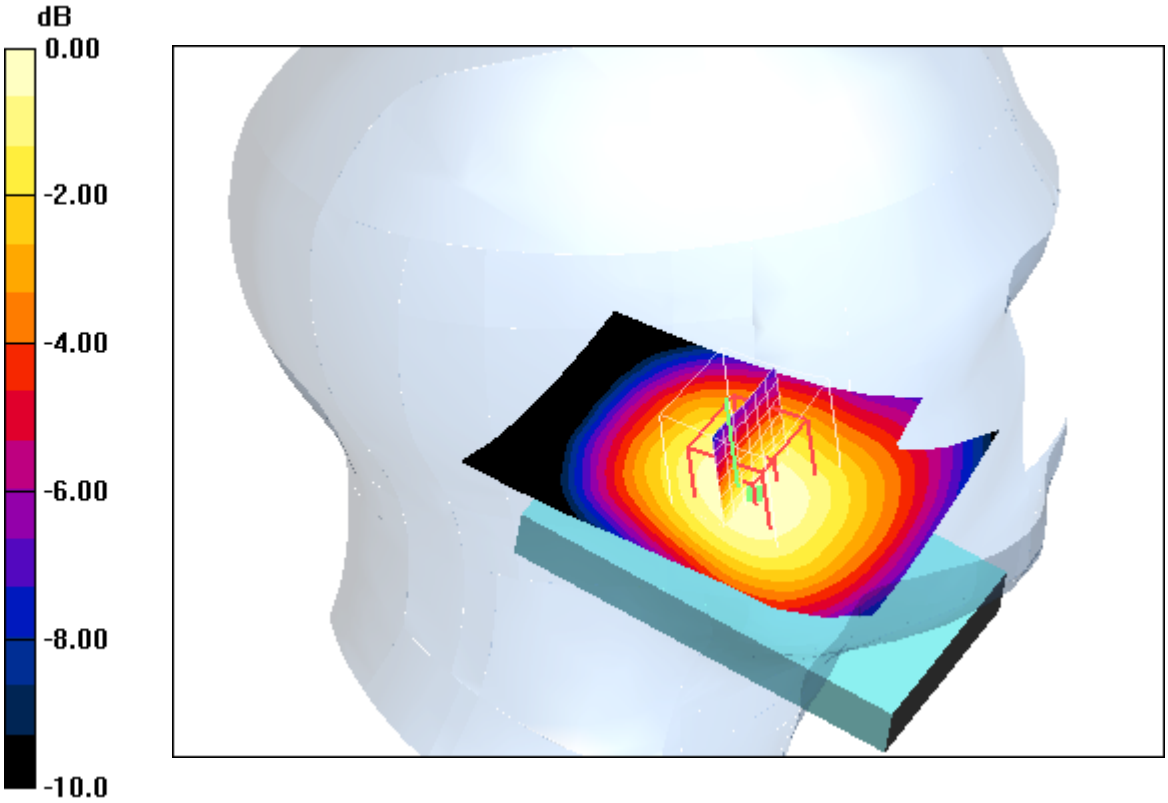

0 dB = 0.488mW/g

Additional information:
ambient temperature: 23.5°C; liquid temperature: 23.2°C

Date/Time: 08.08.2011 19:10:35Date/Time: 08.08.2011 19:16:21

IEEE1528_OET65-LeftHandSide-GSM850

DUT: Sony Ericsson; Type: AAD-3880123-BV; Serial: BX902GJNRZ
Communication System: GSM 850; Frequency: 848.8 MHz; Duty Cycle: 1:8
Medium: HSL850 Medium parameters used: f = 848.8 MHz; σ = 0.9 mho/m; ε_r = 42.9; ρ = 1000 kg/m^3
Phantom section: Left Section
DASY4 Configuration:
- Probe: ET3DV6 - SN1554; ConvF(6.89, 6.89, 6.89); Calibrated: 11.05.2011
- Sensor-Surface: 4mm (Mechanical And Optical Surface Detection)
- Electronics: DAE3 Sn413; Calibrated: 13.01.2011
- Phantom: SAM 12; Type: SAM; Serial: 1043
- Measurement SW: DASY4, V4.5 Build 19; Postprocessing SW: SEMCAD, V1.8 Build 146

Tilt position - High/Area Scan (51x81x1): Measurement grid: dx=15mm, dy=15mm
Maximum value of SAR (interpolated) = 0.583 mW/g

Tilt position - High/Zoom Scan (7x7x7) (7x7x7)/Cube 0: Measurement grid: dx=5mm, dy=5mm, dz=5mm
Reference Value = 25.6 V/m; Power Drift = -0.060 dB
Peak SAR (extrapolated) = 0.665 W/kg
SAR(1 g) = 0.541 mW/g; SAR(10 g) = 0.402 mW/g
Maximum value of SAR (measured) = 0.570 mW/g

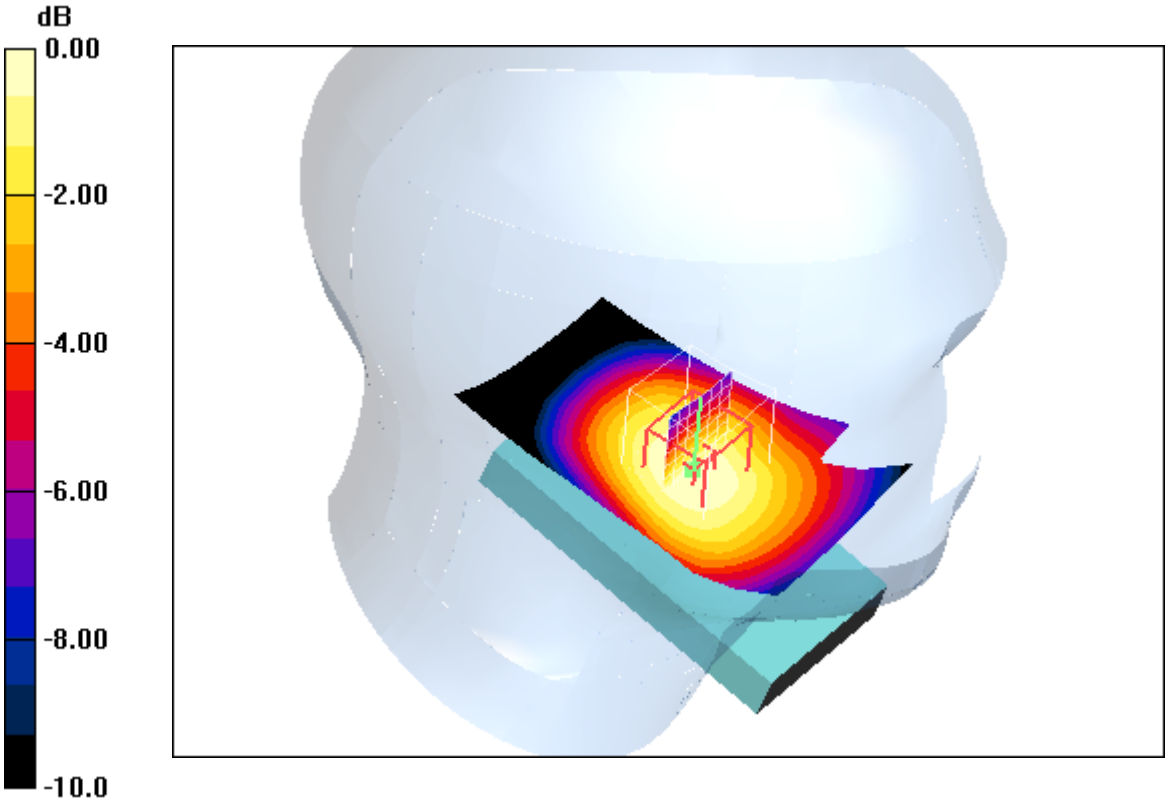

0 dB = 0.570mW/g

Additional information:
ambient temperature: 23.5°C; liquid temperature: 23.2°C

Date/Time: 08.08.2011 14:55:11Date/Time: 08.08.2011 15:01:19

IEEE1528_OET65-RightHandSide-GSM850

DUT: Sony Ericsson; Type: AAD-3880123-BV; Serial: BX902GJNRZ
Communication System: GSM 850; Frequency: 824.2 MHz; Duty Cycle: 1:8
Medium: HSL850 Medium parameters used: f = 824.2 MHz; σ = 0.87 mho/m; ε_r = 43.2; ρ = 1000 kg/m^3
Phantom section: Right Section
DASY4 Configuration:
- Probe: ET3DV6 - SN1554; ConvF(6.89, 6.89, 6.89); Calibrated: 11.05.2011
- Sensor-Surface: 4mm (Mechanical And Optical Surface Detection)
- Electronics: DAE3 Sn413; Calibrated: 13.01.2011
- Phantom: SAM 12; Type: SAM; Serial: 1043
- Measurement SW: DASY4, V4.5 Build 19; Postprocessing SW: SEMCAD, V1.8 Build 146

Touch position - Low/Area Scan (51x81x1): Measurement grid: dx=15mm, dy=15mm

Maximum value of SAR (interpolated) = 0.773 mW/g

Touch position - Low/Zoom Scan (7x7x7) (7x7x7)/Cube 0: Measurement grid: dx=5mm, dy=5mm, dz=5mm

Reference Value = 30.1 V/m; Power Drift = -0.080 dB
Peak SAR (extrapolated) = 0.950 W/kg
SAR(1 g) = 0.725 mW/g; SAR(10 g) = 0.522 mW/g
Maximum value of SAR (measured) = 0.768 mW/g

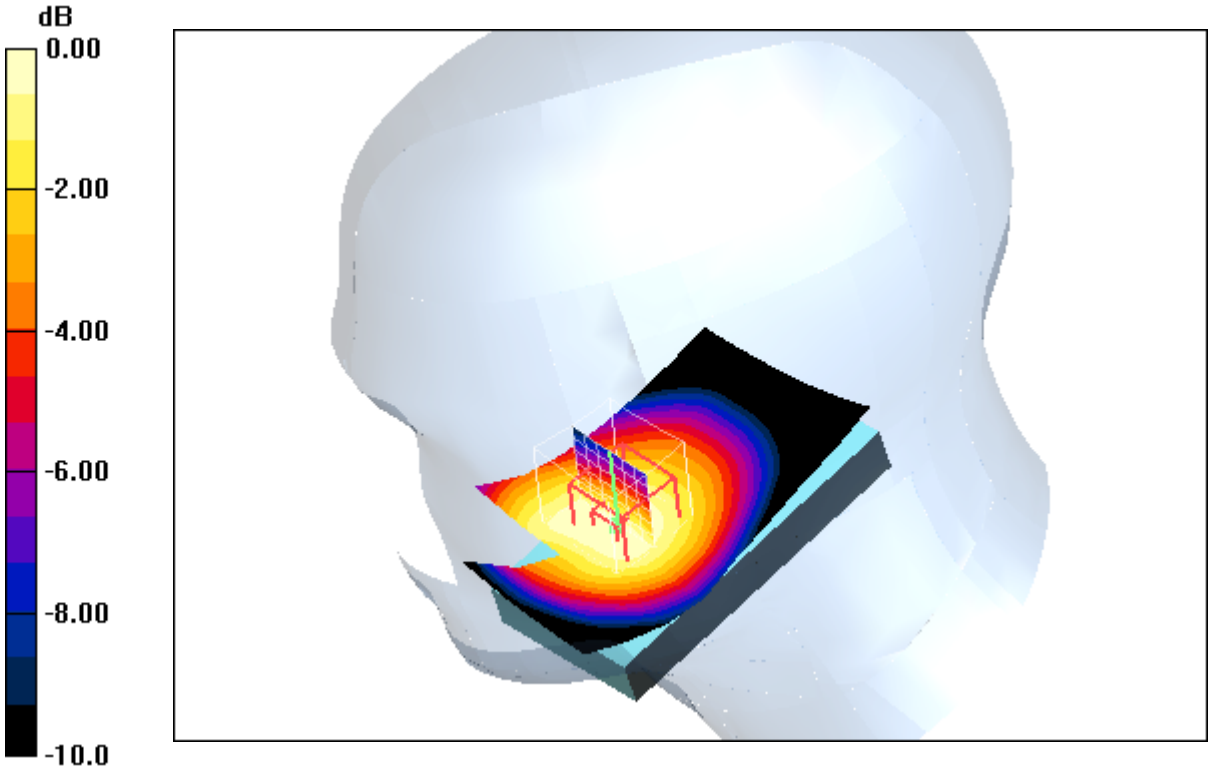

0 dB = 0.768mW/g

Additional information:
ambient temperature: 23.5°C; liquid temperature: 23.1°C

Date/Time: 08.08.2011 15:15:46Date/Time: 08.08.2011 15:21:23

IEEE1528_OET65-RightHandSide-GSM850

DUT: Sony Ericsson; Type: AAD-3880123-BV; Serial: BX902GJNRZ
Communication System: GSM 850; Frequency: 836.6 MHz; Duty Cycle: 1:8
Medium: HSL850 Medium parameters used: f = 836.6 MHz; σ = 0.89 mho/m; ε_r = 43; ρ = 1000 kg/m^3
Phantom section: Right Section
DASY4 Configuration:
- Probe: ET3DV6 - SN1554; ConvF(6.89, 6.89, 6.89); Calibrated: 11.05.2011
- Sensor-Surface: 4mm (Mechanical And Optical Surface Detection)
- Electronics: DAE3 Sn413; Calibrated: 13.01.2011
- Phantom: SAM 12; Type: SAM; Serial: 1043
- Measurement SW: DASY4, V4.5 Build 19; Postprocessing SW: SEMCAD, V1.8 Build 146

Touch position - Middle/Area Scan (51x81x1): Measurement grid: dx=15mm, dy=15mm
Maximum value of SAR (interpolated) = 1.01 mW/g

Touch position - Middle/Zoom Scan (7x7x7) (7x7x7)/Cube 0: Measurement grid: dx=5mm, dy=5mm, dz=5mm
Reference Value = 34.0 V/m; Power Drift = -0.016 dB
Peak SAR (extrapolated) = 1.26 W/kg
SAR(1 g) = 0.963 mW/g; SAR(10 g) = 0.693 mW/g
Maximum value of SAR (measured) = 1.02 mW/g

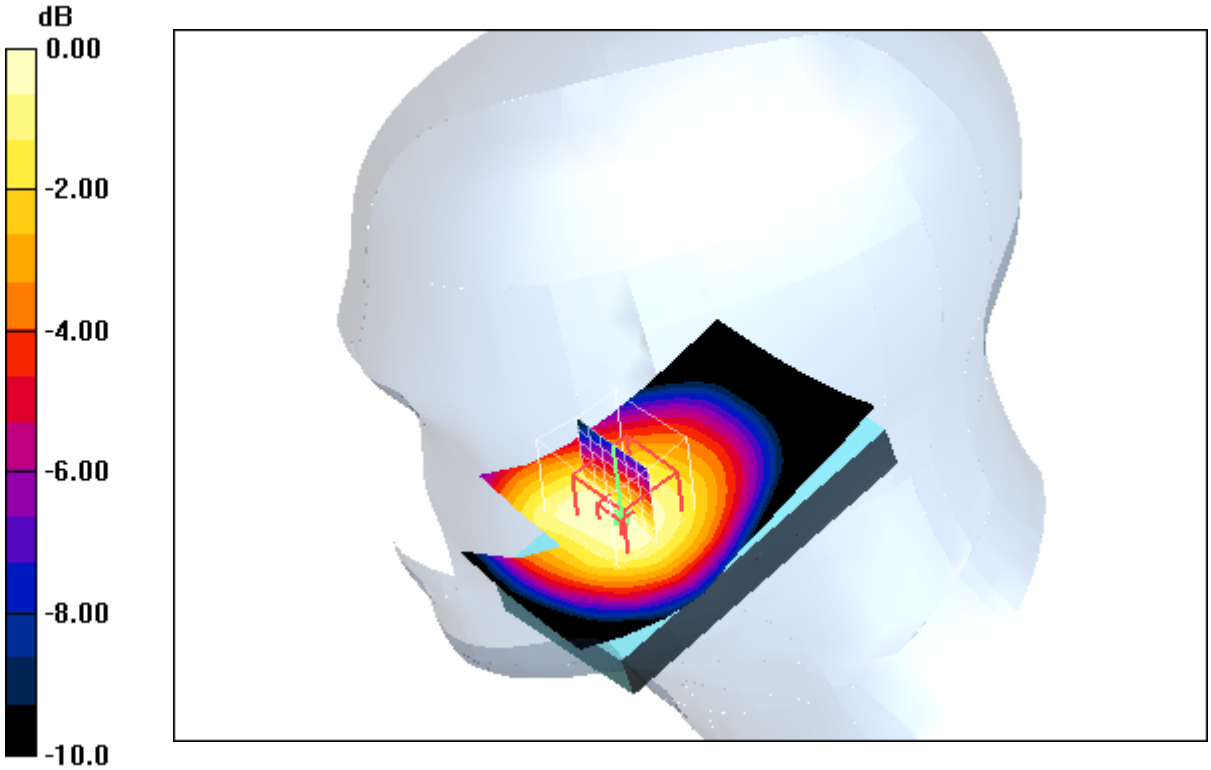

0 dB = 1.02mW/g

Additional information:
ambient temperature: 23.5°C; liquid temperature: 23.1°C

Date/Time: 08.08.2011 15:35:42Date/Time: 08.08.2011 15:41:19

IEEE1528_OET65-RightHandSide-GSM850

DUT: Sony Ericsson; Type: AAD-3880123-BV; Serial: BX902GJNRZ
Communication System: GSM 850; Frequency: 848.8 MHz; Duty Cycle: 1:8
Medium: HSL850 Medium parameters used: f = 848.8 MHz; σ = 0.9 mho/m; ε_r = 42.9; ρ = 1000 kg/m^3
Phantom section: Right Section
DASY4 Configuration:
- Probe: ET3DV6 - SN1554; ConvF(6.89, 6.89, 6.89); Calibrated: 11.05.2011
- Sensor-Surface: 4mm (Mechanical And Optical Surface Detection)
- Electronics: DAE3 Sn413; Calibrated: 13.01.2011
- Phantom: SAM 12; Type: SAM; Serial: 1043
- Measurement SW: DASY4, V4.5 Build 19; Postprocessing SW: SEMCAD, V1.8 Build 146

Touch position - High/Area Scan (51x81x1): Measurement grid: dx=15mm, dy=15mm
Maximum value of SAR (interpolated) = 1.20 mW/g

Touch position - High/Zoom Scan (7x7x7) (7x7x7)/Cube 0: Measurement grid: dx=5mm, dy=5mm, dz=5mm
Reference Value = 37.1 V/m; Power Drift = -0.092 dB
Peak SAR (extrapolated) = 1.48 W/kg
SAR(1 g) = 1.15 mW/g; SAR(10 g) = 0.827 mW/g
Maximum value of SAR (measured) = 1.22 mW/g

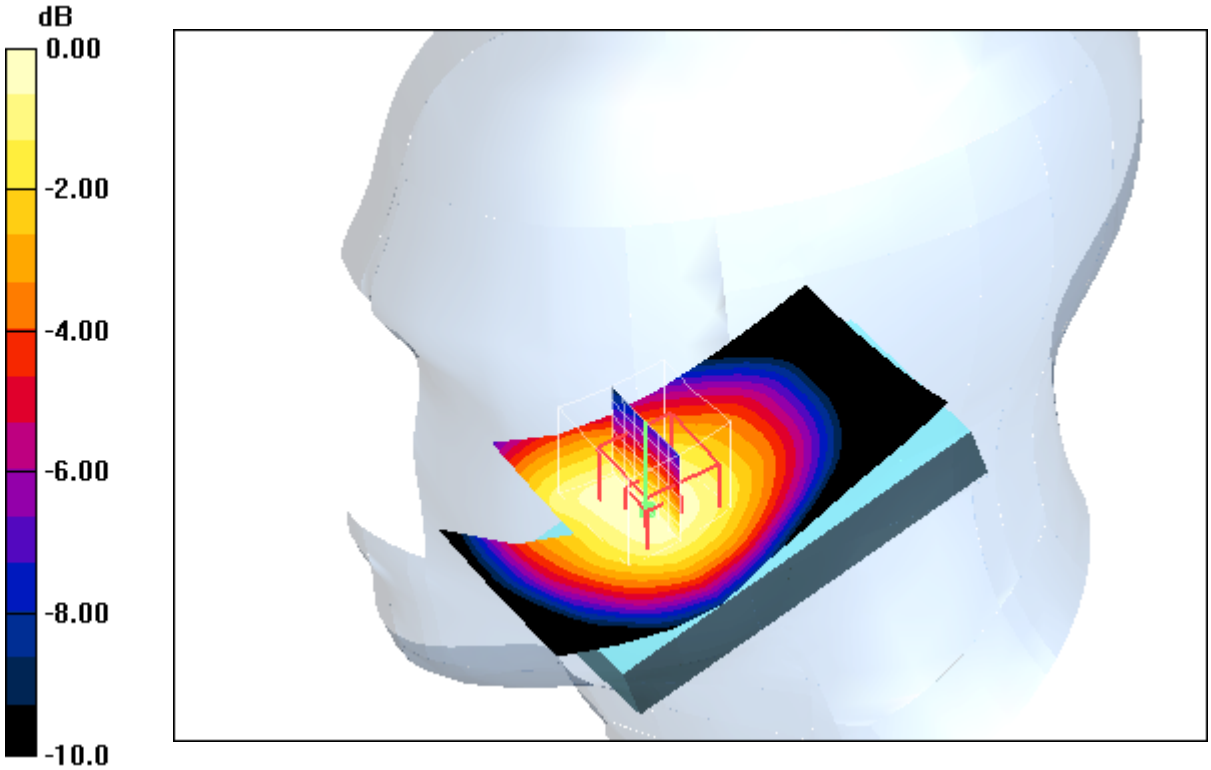

0 dB = 1.22mW/g

Additional information:
ambient temperature: 23.5°C; liquid temperature: 23.1°C

Date/Time: 08.08.2011 16:37:17Date/Time: 08.08.2011 16:43:32

IEEE1528_OET65-RightHandSide-GSM850

DUT: Sony Ericsson; Type: AAD-3880123-BV; Serial: BX902GJNRZ
Communication System: GSM 850; Frequency: 824.2 MHz; Duty Cycle: 1:8
Medium: HSL850 Medium parameters used: f = 824.2 MHz; σ = 0.87 mho/m; ε_r = 43.2; ρ = 1000 kg/m^3
Phantom section: Right Section
DASY4 Configuration:
- Probe: ET3DV6 - SN1554; ConvF(6.89, 6.89, 6.89); Calibrated: 11.05.2011
- Sensor-Surface: 4mm (Mechanical And Optical Surface Detection)
- Electronics: DAE3 Sn413; Calibrated: 13.01.2011
- Phantom: SAM 12; Type: SAM; Serial: 1043
- Measurement SW: DASY4, V4.5 Build 19; Postprocessing SW: SEMCAD, V1.8 Build 146

Tilt position - Low/Area Scan (51x81x1): Measurement grid: dx=15mm, dy=15mm
Maximum value of SAR (interpolated) = 0.331 mW/g

Tilt position - Low/Zoom Scan (7x7x7) (7x7x7)/Cube 0: Measurement grid: dx=5mm, dy=5mm, dz=5mm
Reference Value = 19.6 V/m; Power Drift = -0.082 dB
Peak SAR (extrapolated) = 0.392 W/kg
SAR(1 g) = 0.314 mW/g; SAR(10 g) = 0.236 mW/g
Maximum value of SAR (measured) = 0.329 mW/g

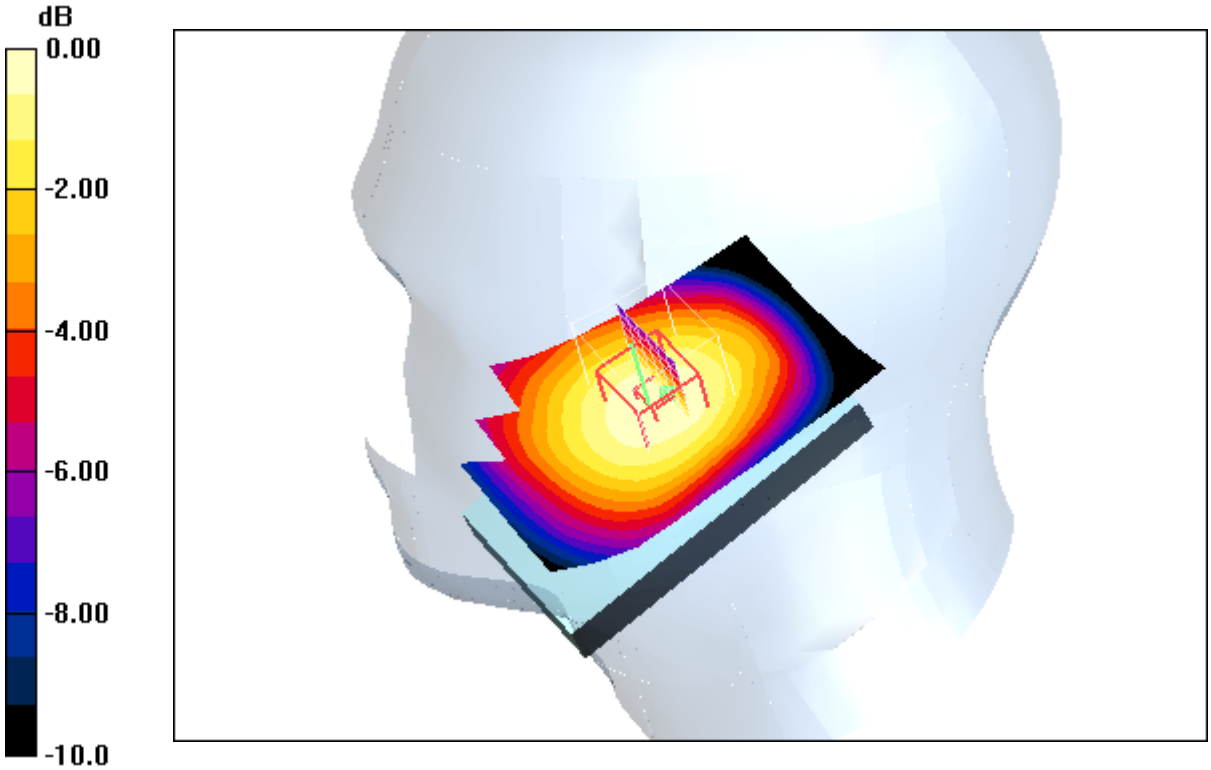

0 dB = 0.329mW/g

Additional information:
ambient temperature: 23.5°C; liquid temperature: 23.1°C

Date/Time: 08.08.2011 16:17:29Date/Time: 08.08.2011 16:23:45

IEEE1528_OET65-RightHandSide-GSM850

DUT: Sony Ericsson; Type: AAD-3880123-BV; Serial: BX902GJNRZ
Communication System: GSM 850; Frequency: 836.6 MHz; Duty Cycle: 1:8
Medium: HSL850 Medium parameters used: f = 836.6 MHz; σ = 0.89 mho/m; ε_r = 43; ρ = 1000 kg/m^3
Phantom section: Right Section
DASY4 Configuration:
- Probe: ET3DV6 - SN1554; ConvF(6.89, 6.89, 6.89); Calibrated: 11.05.2011
- Sensor-Surface: 4mm (Mechanical And Optical Surface Detection)
- Electronics: DAE3 Sn413; Calibrated: 13.01.2011
- Phantom: SAM 12; Type: SAM; Serial: 1043
- Measurement SW: DASY4, V4.5 Build 19; Postprocessing SW: SEMCAD, V1.8 Build 146

Tilt position - Middle/Area Scan (51x81x1): Measurement grid: dx=15mm, dy=15mm
Maximum value of SAR (interpolated) = 0.441 mW/g

Tilt position - Middle/Zoom Scan (7x7x7) (7x7x7)/Cube 0: Measurement grid: dx=5mm, dy=5mm, dz=5mm
Reference Value = 22.5 V/m; Power Drift = 0.012 dB
Peak SAR (extrapolated) = 0.525 W/kg
SAR(1 g) = 0.424 mW/g; SAR(10 g) = 0.318 mW/g
Maximum value of SAR (measured) = 0.448 mW/g

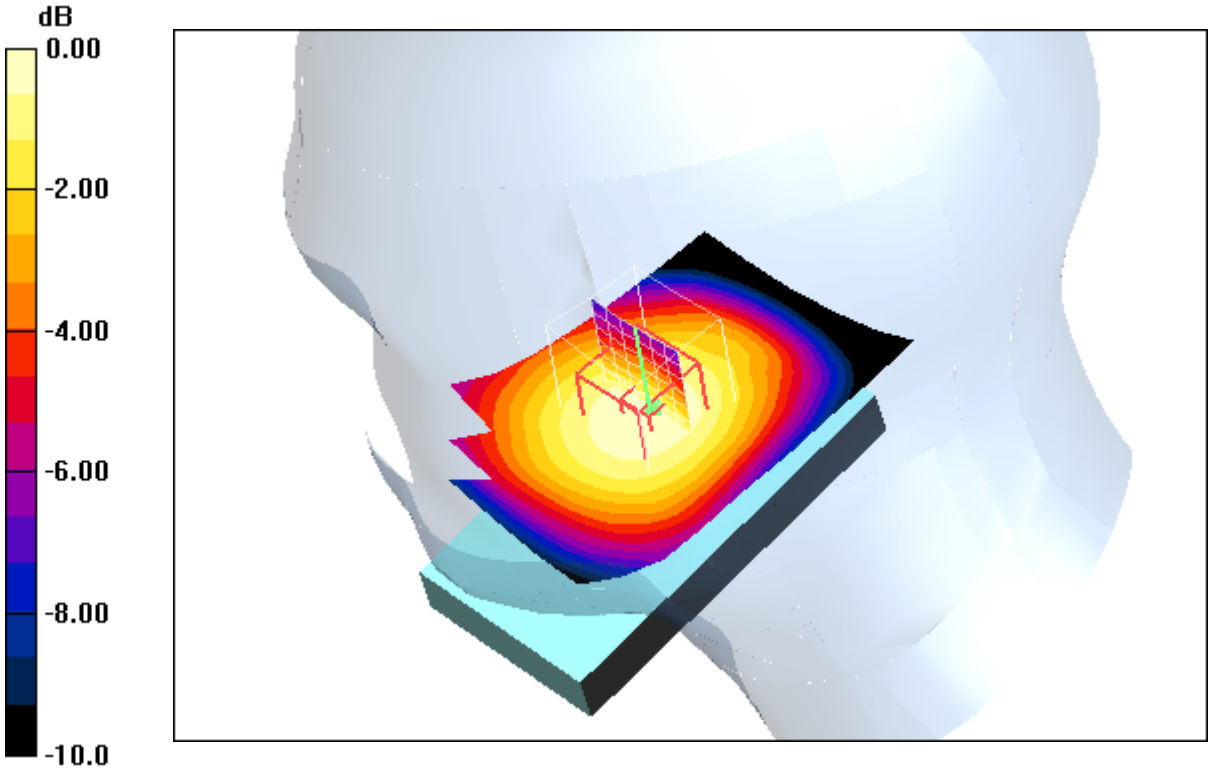

0 dB = 0.448mW/g

Additional information:
ambient temperature: 23.5°C; liquid temperature: 23.1°C

Date/Time: 08.08.2011 15:56:02Date/Time: 08.08.2011 16:02:36

IEEE1528_OET65-RightHandSide-GSM850

DUT: Sony Ericsson; Type: AAD-3880123-BV; Serial: BX902GJNRZ
Communication System: GSM 850; Frequency: 848.8 MHz; Duty Cycle: 1:8
Medium: HSL850 Medium parameters used: f = 848.8 MHz; σ = 0.9 mho/m; ε_r = 42.9; ρ = 1000 kg/m^3
Phantom section: Right Section
DASY4 Configuration:
- Probe: ET3DV6 - SN1554; ConvF(6.89, 6.89, 6.89); Calibrated: 11.05.2011
- Sensor-Surface: 4mm (Mechanical And Optical Surface Detection)
- Electronics: DAE3 Sn413; Calibrated: 13.01.2011
- Phantom: SAM 12; Type: SAM; Serial: 1043
- Measurement SW: DASY4, V4.5 Build 19; Postprocessing SW: SEMCAD, V1.8 Build 146

Tilt position - High/Area Scan (51x81x1): Measurement grid: dx=15mm, dy=15mm

Maximum value of SAR (interpolated) = 0.544 mW/g

Tilt position - High/Zoom Scan (7x7x7) (7x7x7)/Cube 0: Measurement grid: dx=5mm, dy=5mm, dz=5mm

Reference Value = 24.8 V/m; Power Drift = -0.045 dB
Peak SAR (extrapolated) = 2.33 W/kg
SAR(1 g) = 0.577 mW/g; SAR(10 g) = 0.394 mW/g
Maximum value of SAR (measured) = 2.33 mW/g

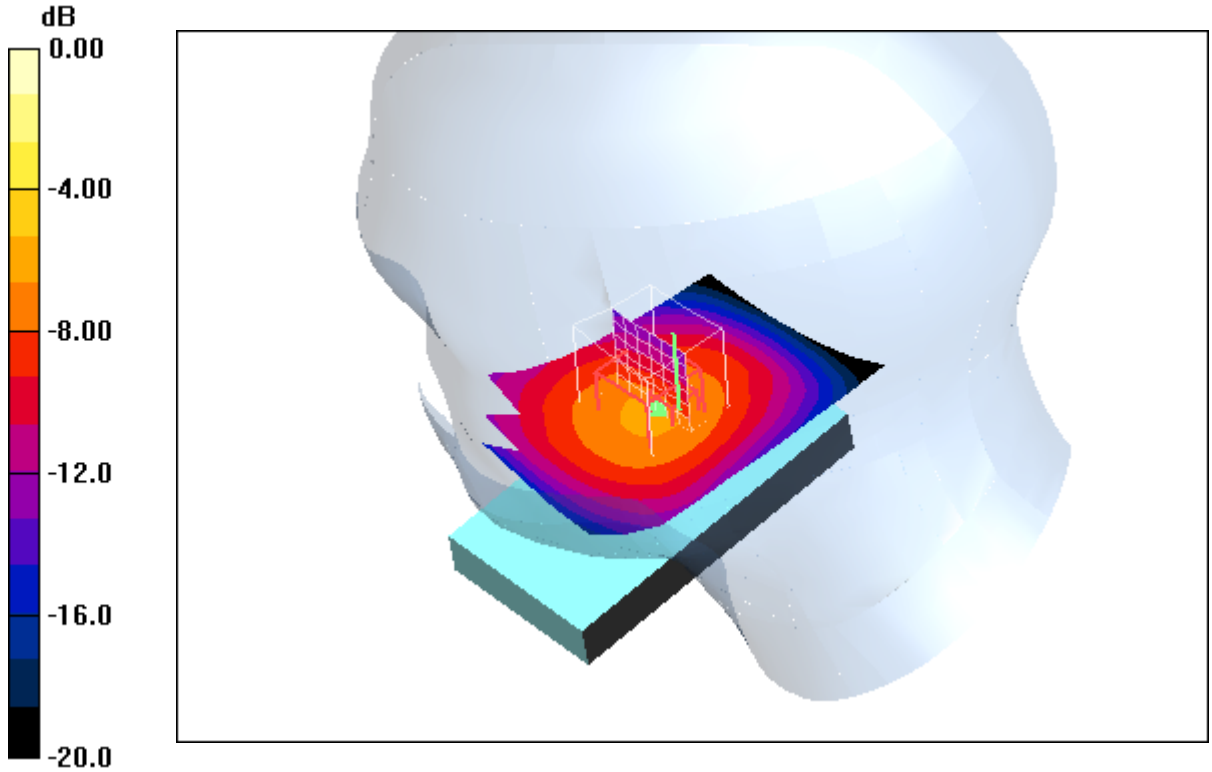

0 dB = 2.33mW/g

Additional information:
ambient temperature: 23.5°C; liquid temperature: 23.1°C

Annex B.2: GSM 850MHz body

Date/Time: 03.08.2011 17:03:37Date/Time: 03.08.2011 17:11:57

IEEE1528_OET65-Body-GSM850 GPRS 4TS

DUT: Sony Ericsson; Type: AAD-3880123-BV; Serial: BX902GJNRZ
Communication System: PCS 850 GPRS 4TS; Frequency: 824.2 MHz; Duty Cycle: 1:2
Medium: M850 Medium parameters used: f = 824.2 MHz; σ = 0.97 mho/m; ε_r = 54.8; ρ = 1000 kg/m^3
Phantom section: Flat Section
DASY4 Configuration:
- Probe: ET3DV6 - SN1554; ConvF(6.75, 6.75, 6.75); Calibrated: 11.05.2011
- Sensor-Surface: 4mm (Mechanical And Optical Surface Detection)
- Electronics: DAE3 Sn413; Calibrated: 13.01.2011
- Phantom: SAM 12; Type: SAM; Serial: 1043
- Measurement SW: DASY4, V4.5 Build 19; Postprocessing SW: SEMCAD, V1.8 Build 146

Front position - Low/Area Scan (51x91x1): Measurement grid: dx=15mm, dy=15mm

Maximum value of SAR (interpolated) = 0.504 mW/g

Front position - Low/Zoom Scan (7x7x7) (7x7x7)/Cube 0: Measurement grid: dx=5mm, dy=5mm, dz=5mm

Reference Value = 22.0 V/m; Power Drift = -0.114 dB
Peak SAR (extrapolated) = 0.620 W/kg
SAR(1 g) = 0.435 mW/g; SAR(10 g) = 0.299 mW/g
Maximum value of SAR (measured) = 0.465 mW/g

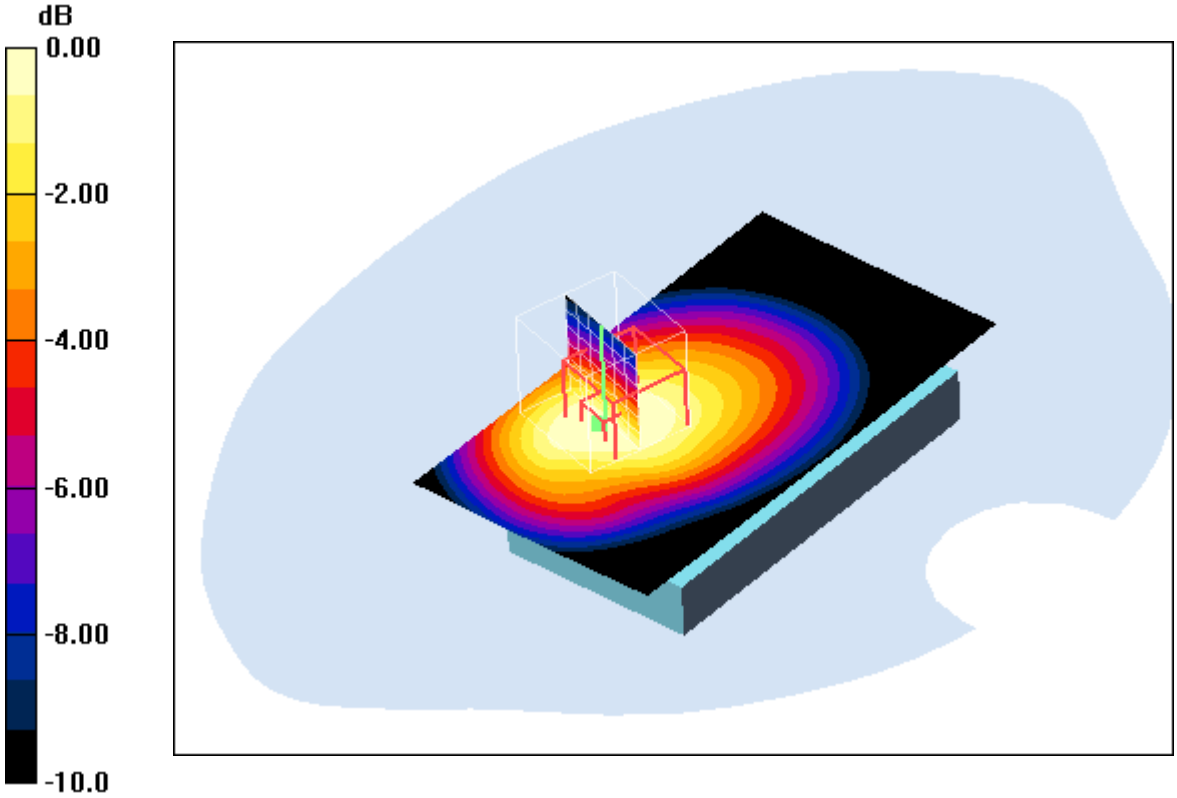

0 dB = 0.465mW/g

Additional information:
position or distance of DUT to SAM: 10 mm
ambient temperature: 22.9°C; liquid temperature: 22.3°C

Date/Time: 03.08.2011 17:25:13Date/Time: 03.08.2011 17:30:35

IEEE1528_OET65-Body-GSM850 GPRS 4TS

DUT: Sony Ericsson; Type: AAD-3880123-BV; Serial: BX902GJNRZ
Communication System: PCS 850 GPRS 4TS; Frequency: 836.6 MHz; Duty Cycle: 1:2
Medium: M850 Medium parameters used: f = 836.6 MHz; σ = 0.98 mho/m; ε_r = 54.7; ρ = 1000 kg/m^3
Phantom section: Flat Section
DASY4 Configuration:
- Probe: ET3DV6 - SN1554; ConvF(6.75, 6.75, 6.75); Calibrated: 11.05.2011
- Sensor-Surface: 4mm (Mechanical And Optical Surface Detection)
- Electronics: DAE3 Sn413; Calibrated: 13.01.2011
- Phantom: SAM 12; Type: SAM; Serial: 1043
- Measurement SW: DASY4, V4.5 Build 19; Postprocessing SW: SEMCAD, V1.8 Build 146

Front position - Middle/Area Scan (51x81x1): Measurement grid: dx=15mm, dy=15mm

Maximum value of SAR (interpolated) = 0.626 mW/g

Front position - Middle/Zoom Scan (7x7x7) (7x7x7)/Cube 0: Measurement grid: dx=5mm, dy=5mm, dz=5mm

Reference Value = 25.3 V/m; Power Drift = 0.069 dB
Peak SAR (extrapolated) = 0.808 W/kg
SAR(1 g) = 0.577 mW/g; SAR(10 g) = 0.400 mW/g
Maximum value of SAR (measured) = 0.615 mW/g

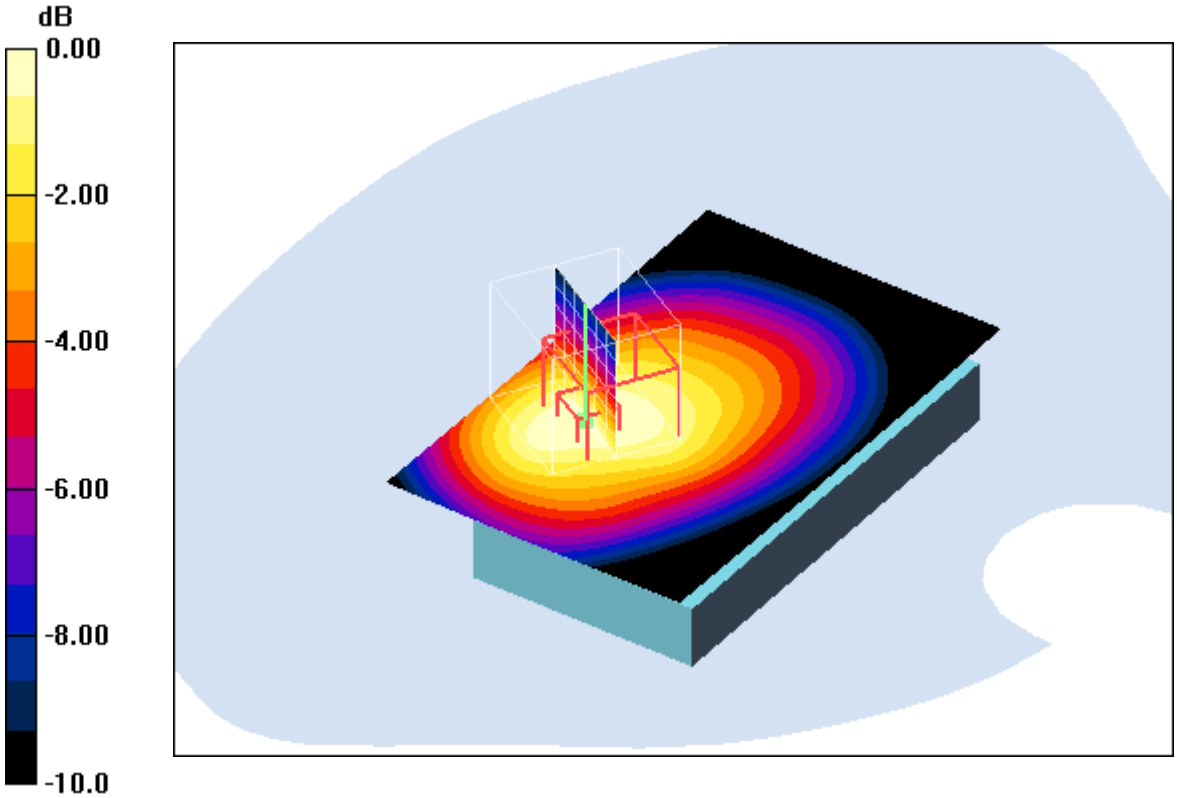

0 dB = 0.615mW/g

Additional information:
position or distance of DUT to SAM: 10 mm
ambient temperature: 22.9°C; liquid temperature: 22.3°C

Date/Time: 03.08.2011 17:43:53Date/Time: 03.08.2011 17:49:15

IEEE1528_OET65-Body-GSM850 GPRS 4TS

DUT: Sony Ericsson; Type: AAD-3880123-BV; Serial: BX902GJNRZ
Communication System: PCS 850 GPRS 4TS; Frequency: 848.8 MHz; Duty Cycle: 1:2
Medium: M850 Medium parameters used: f = 848.8 MHz; σ = 1 mho/m; ε_r = 54.6; ρ = 1000 kg/m^3
Phantom section: Flat Section
DASY4 Configuration:
- Probe: ET3DV6 - SN1554; ConvF(6.75, 6.75, 6.75); Calibrated: 11.05.2011
- Sensor-Surface: 4mm (Mechanical And Optical Surface Detection)
- Electronics: DAE3 Sn413; Calibrated: 13.01.2011
- Phantom: SAM 12; Type: SAM; Serial: 1043
- Measurement SW: DASY4, V4.5 Build 19; Postprocessing SW: SEMCAD, V1.8 Build 146

Front position - High/Area Scan (51x81x1): Measurement grid: dx=15mm, dy=15mm

Maximum value of SAR (interpolated) = 0.845 mW/g

Front position - High/Zoom Scan (7x7x7) (7x8x7)/Cube 0: Measurement grid: dx=5mm, dy=5mm, dz=5mm

Reference Value = 29.1 V/m; Power Drift = -0.069 dB
Peak SAR (extrapolated) = 1.07 W/kg
SAR(1 g) = 0.779 mW/g; SAR(10 g) = 0.542 mW/g
Maximum value of SAR (measured) = 0.830 mW/g

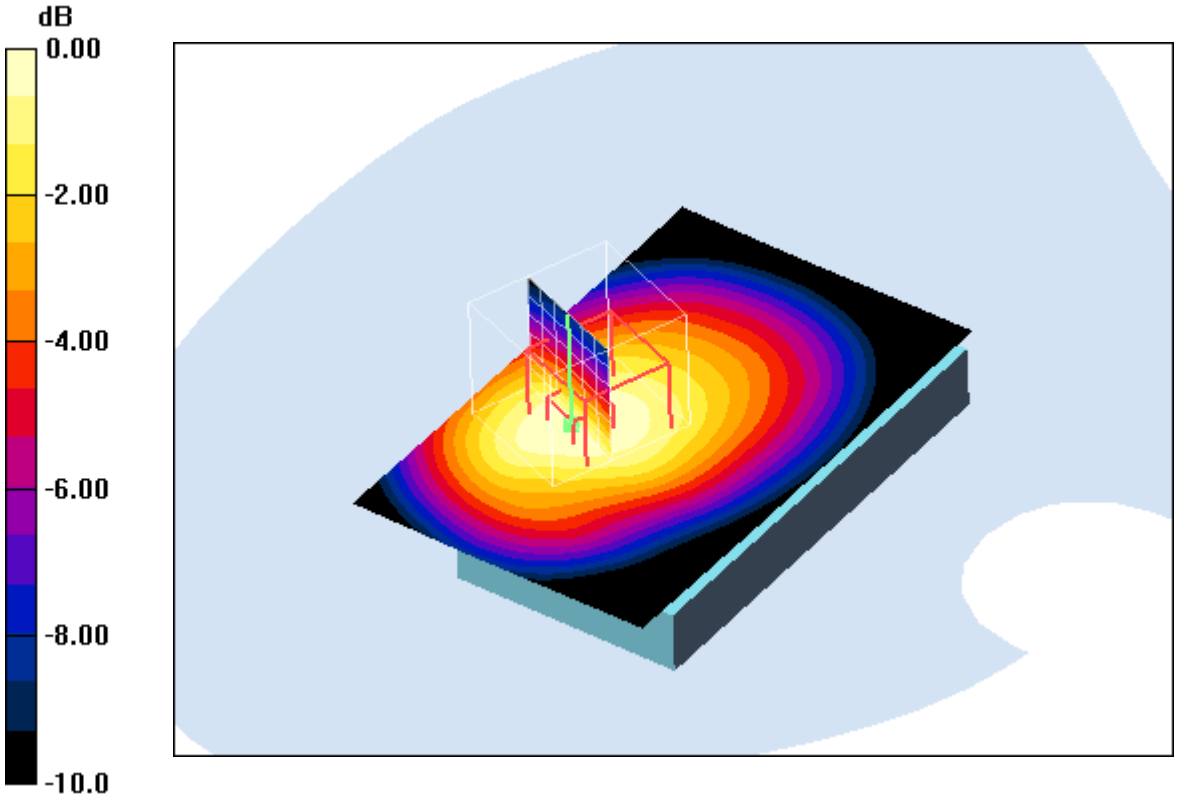

0 dB = 0.830mW/g

Additional information:
position or distance of DUT to SAM: 10 mm
ambient temperature: 22.9°C; liquid temperature: 22.3°C

Date/Time: 03.08.2011 16:22:27Date/Time: 03.08.2011 16:30:27

IEEE1528_OET65-Body-GSM850 GPRS 4TS

DUT: Sony Ericsson; Type: AAD-3880123-BV; Serial: BX902GJNRZ
Communication System: PCS 850 GPRS 4TS; Frequency: 824.2 MHz; Duty Cycle: 1:2
Medium: M850 Medium parameters used: f = 824.2 MHz; σ = 0.97 mho/m; ε_r = 54.8; ρ = 1000 kg/m^3
Phantom section: Flat Section
DASY4 Configuration:
- Probe: ET3DV6 - SN1554; ConvF(6.75, 6.75, 6.75); Calibrated: 11.05.2011
- Sensor-Surface: 4mm (Mechanical And Optical Surface Detection)
- Electronics: DAE3 Sn413; Calibrated: 13.01.2011
- Phantom: SAM 12; Type: SAM; Serial: 1043
- Measurement SW: DASY4, V4.5 Build 19; Postprocessing SW: SEMCAD, V1.8 Build 146

Rear position - Low/Area Scan (51x81x1): Measurement grid: dx=15mm, dy=15mm

Maximum value of SAR (interpolated) = 0.749 mW/g

Rear position - Low/Zoom Scan (7x7x7) (7x11x7)/Cube 0: Measurement grid: dx=5mm, dy=5mm, dz=5mm

Reference Value = 28.8 V/m; Power Drift = -0.027 dB
Peak SAR (extrapolated) = 0.998 W/kg
SAR(1 g) = 0.712 mW/g; SAR(10 g) = 0.492 mW/g
Maximum value of SAR (measured) = 0.762 mW/g

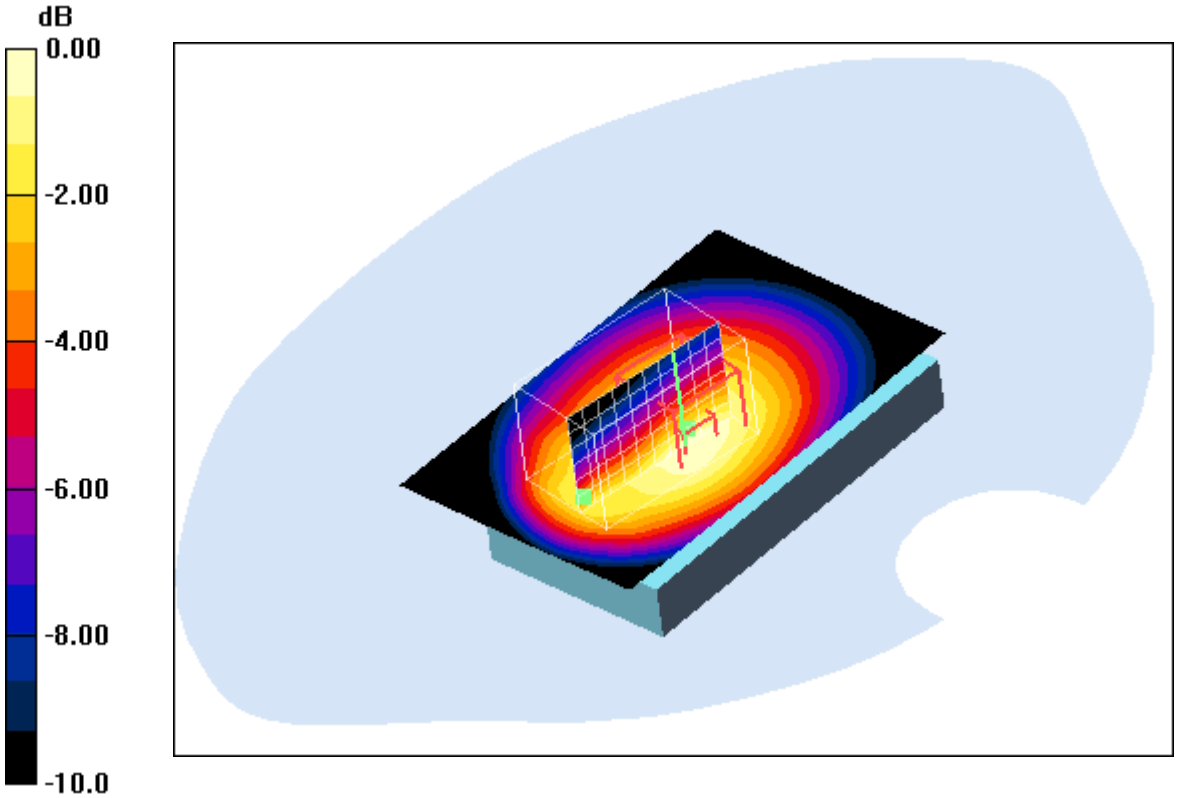

0 dB = 0.762mW/g

Additional information:
position or distance of DUT to SAM: 10 mm
ambient temperature: 22.9°C; liquid temperature: 22.3°C

Date/Time: 03.08.2011 15:57:14Date/Time: 03.08.2011 16:02:32

IEEE1528_OET65-Body-GSM850 GPRS 4TS

DUT: Sony Ericsson; Type: AAD-3880123-BV; Serial: BX902GJNRZ
Communication System: PCS 850 GPRS 4TS; Frequency: 836.6 MHz; Duty Cycle: 1:2
Medium: M850 Medium parameters used: f = 836.6 MHz; σ = 0.98 mho/m; ε_r = 54.7; ρ = 1000 kg/m^3
Phantom section: Flat Section
DASY4 Configuration:
- Probe: ET3DV6 - SN1554; ConvF(6.75, 6.75, 6.75); Calibrated: 11.05.2011
- Sensor-Surface: 4mm (Mechanical And Optical Surface Detection)
- Electronics: DAE3 Sn413; Calibrated: 13.01.2011
- Phantom: SAM 12; Type: SAM; Serial: 1043
- Measurement SW: DASY4, V4.5 Build 19; Postprocessing SW: SEMCAD, V1.8 Build 146

Rear position - Middle/Area Scan (51x81x1): Measurement grid: dx=15mm, dy=15mm

Maximum value of SAR (interpolated) = 1.02 mW/g

Rear position - Middle/Zoom Scan (7x7x7) (7x11x7)/Cube 0: Measurement grid: dx=5mm, dy=5mm, dz=5mm

Reference Value = 33.1 V/m; Power Drift = -0.136 dB
Peak SAR (extrapolated) = 1.33 W/kg
SAR(1 g) = 0.950 mW/g; SAR(10 g) = 0.658 mW/g
Maximum value of SAR (measured) = 1.02 mW/g

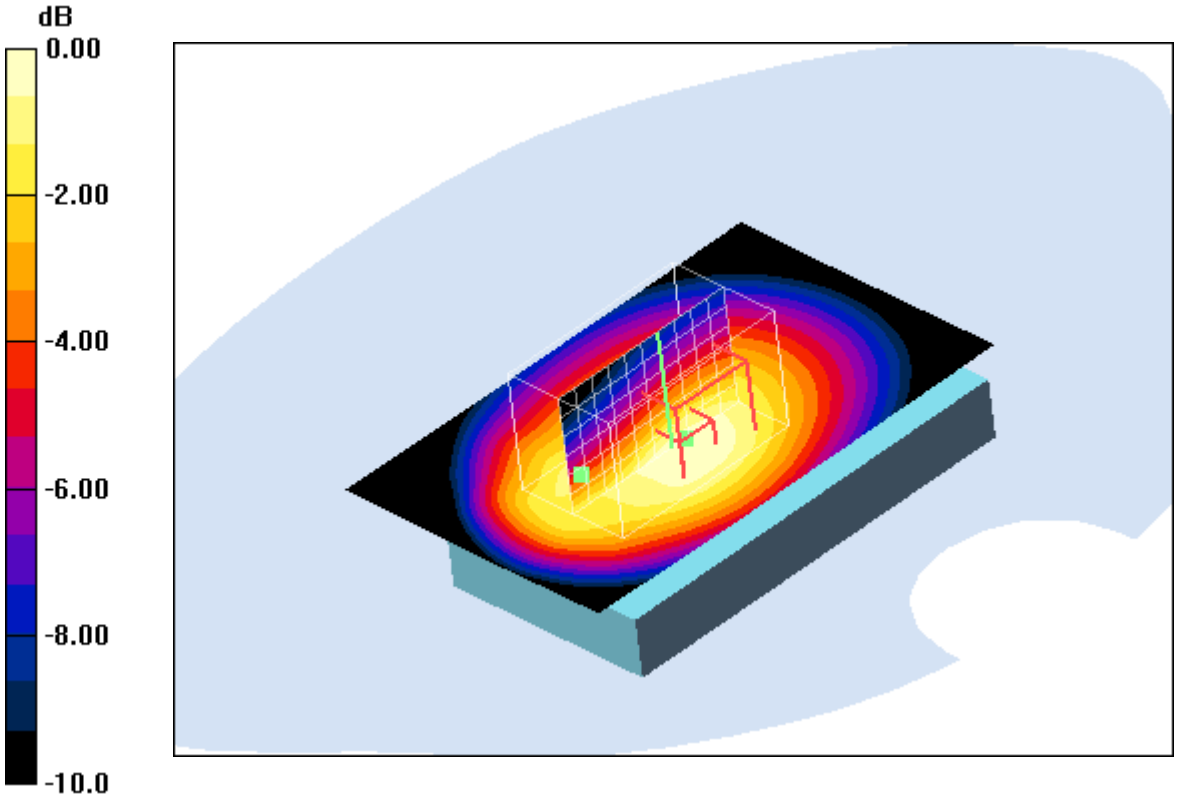

0 dB = 1.02mW/g

Additional information:
position or distance of DUT to SAM: 10 mm
ambient temperature: 22.9°C; liquid temperature: 22.3°C

Date/Time: 03.08.2011 15:34:09Date/Time: 03.08.2011 15:40:56

IEEE1528_OET65-Body-GSM850 GPRS 4TS

DUT: Sony Ericsson; Type: AAD-3880123-BV; Serial: BX902GJNRZ
Communication System: PCS 850 GPRS 4TS; Frequency: 848.8 MHz; Duty Cycle: 1:2
Medium: M850 Medium parameters used: f = 848.8 MHz; σ = 1 mho/m; ε_r = 54.6; ρ = 1000 kg/m^3
Phantom section: Flat Section
DASY4 Configuration:
- Probe: ET3DV6 - SN1554; ConvF(6.75, 6.75, 6.75); Calibrated: 11.05.2011
- Sensor-Surface: 4mm (Mechanical And Optical Surface Detection)
- Electronics: DAE3 Sn413; Calibrated: 13.01.2011
- Phantom: SAM 12; Type: SAM; Serial: 1043
- Measurement SW: DASY4, V4.5 Build 19; Postprocessing SW: SEMCAD, V1.8 Build 146

Rear position - High/Area Scan (51x81x1): Measurement grid: dx=15mm, dy=15mm

Maximum value of SAR (interpolated) = 1.29 mW/g

Rear position - High/Zoom Scan (7x7x7) (7x9x7)/Cube 0: Measurement grid: dx=5mm, dy=5mm, dz=5mm

Reference Value = 34.8 V/m; Power Drift = -0.043 dB
Peak SAR (extrapolated) = 1.66 W/kg
SAR(1 g) = 1.19 mW/g; SAR(10 g) = 0.828 mW/g
Maximum value of SAR (measured) = 1.27 mW/g

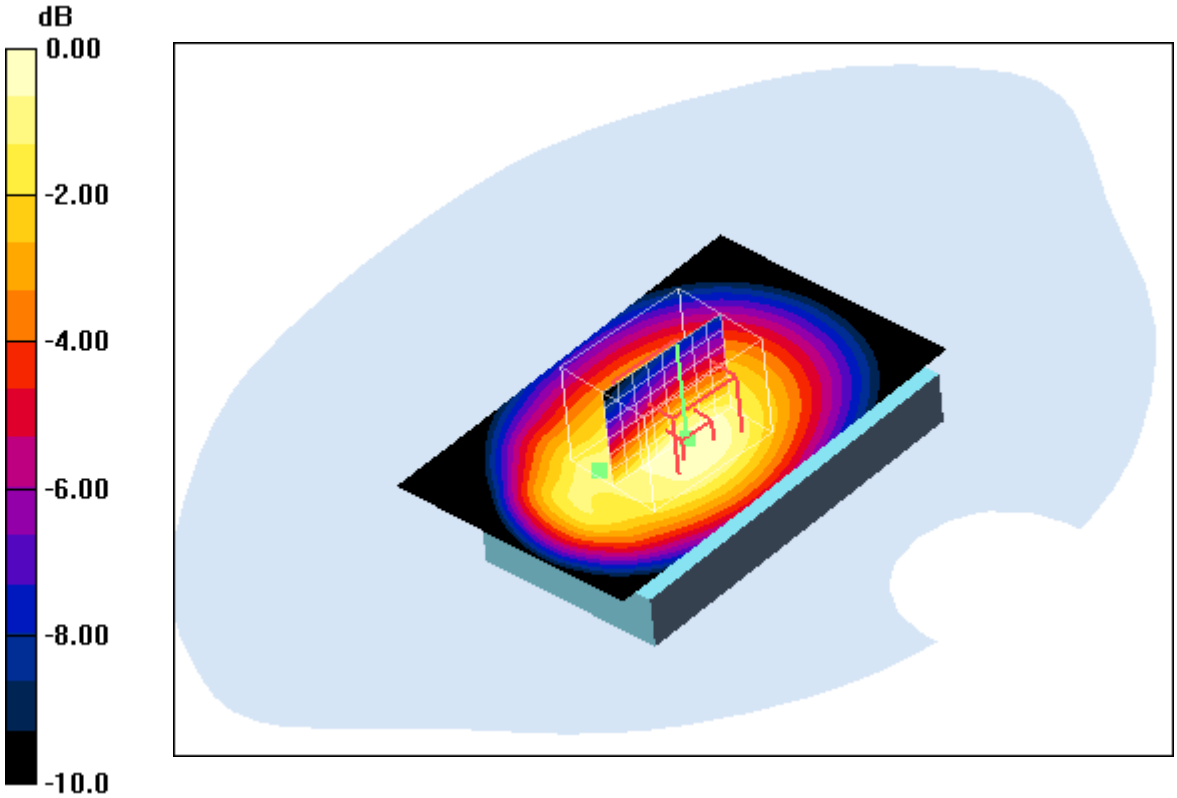

0 dB = 1.27mW/g

Additional information:
position or distance of DUT to SAM: 10 mm
ambient temperature: 22.9°C; liquid temperature: 22.3°C

Date/Time: 04.08.2011 07:28:58Date/Time: 04.08.2011 07:34:42

IEEE1528_OET65-Body-GSM850 GPRS 4TS

DUT: Sony Ericsson; Type: AAD-3880123-BV; Serial: BX902GJNRZ
Communication System: PCS 850 GPRS 4TS; Frequency: 836.6 MHz; Duty Cycle: 1:2
Medium: M850 Medium parameters used: f = 836.6 MHz; σ = 0.98 mho/m; ε_r = 54.7; ρ = 1000 kg/m^3
Phantom section: Flat Section
DASY4 Configuration:
- Probe: ET3DV6 - SN1554; ConvF(6.75, 6.75, 6.75); Calibrated: 11.05.2011
- Sensor-Surface: 4mm (Mechanical And Optical Surface Detection)
- Electronics: DAE3 Sn413; Calibrated: 13.01.2011
- Phantom: SAM 12; Type: SAM; Serial: 1043
- Measurement SW: DASY4, V4.5 Build 19; Postprocessing SW: SEMCAD, V1.8 Build 146

Edge left position - Middle/Area Scan (51x81x1): Measurement grid: dx=15mm, dy=15mm

Maximum value of SAR (interpolated) = 0.373 mW/g

Edge left position - Middle/Zoom Scan (7x7x7) (7x7x7)/Cube 0: Measurement grid: dx=5mm, dy=5mm, dz=5mm

Reference Value = 19.6 V/m; Power Drift = -0.121 dB
Peak SAR (extrapolated) = 0.472 W/kg
SAR(1 g) = 0.334 mW/g; SAR(10 g) = 0.220 mW/g
Maximum value of SAR (measured) = 0.361 mW/g

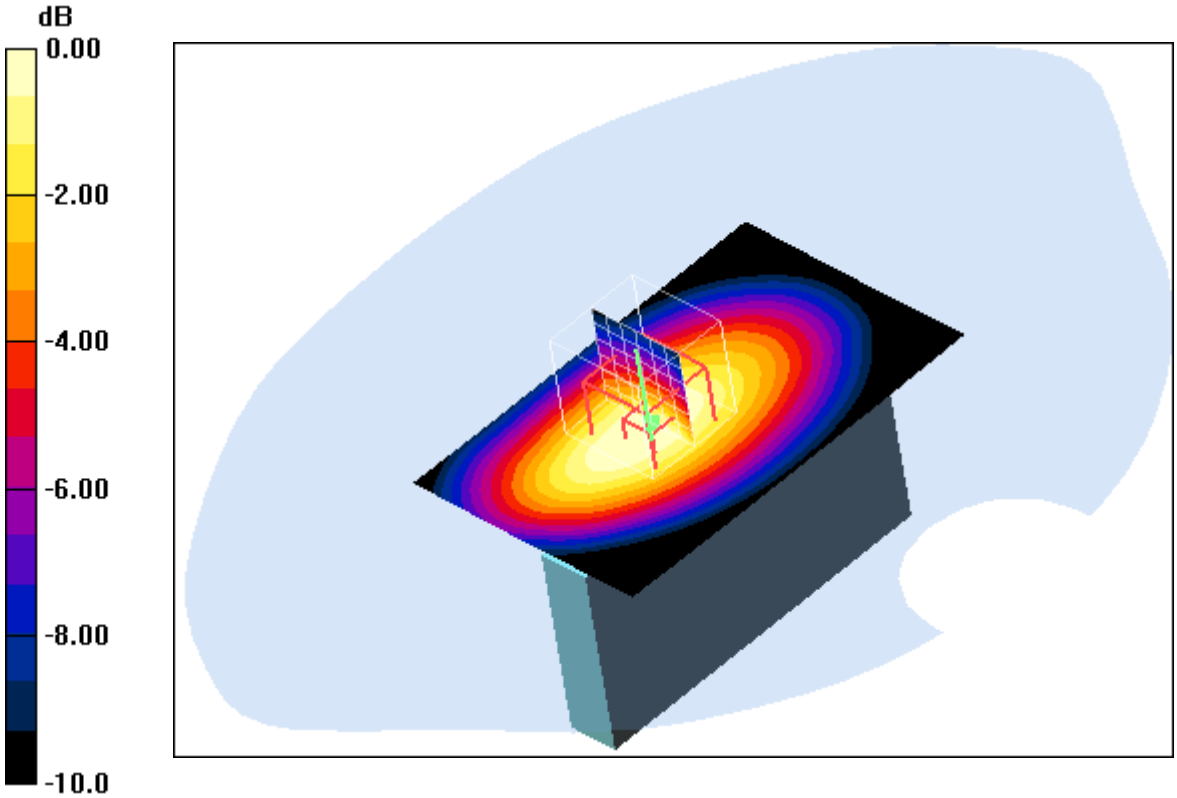

0 dB = 0.361mW/g

Additional information:
position or distance of DUT to SAM: 10 mm
ambient temperature: 22.9°C; liquid temperature: 22.3°C

Date/Time: 04.08.2011 07:54:07Date/Time: 04.08.2011 07:59:49

IEEE1528_OET65-Body-GSM850 GPRS 4TS

DUT: Sony Ericsson; Type: AAD-3880123-BV; Serial: BX902GJNRZ
Communication System: PCS 850 GPRS 4TS; Frequency: 836.6 MHz; Duty Cycle: 1:2
Medium: M850 Medium parameters used: f = 836.6 MHz; σ = 0.98 mho/m; ε_r = 54.7; ρ = 1000 kg/m^3
Phantom section: Flat Section
DASY4 Configuration:
- Probe: ET3DV6 - SN1554; ConvF(6.75, 6.75, 6.75); Calibrated: 11.05.2011
- Sensor-Surface: 4mm (Mechanical And Optical Surface Detection)
- Electronics: DAE3 Sn413; Calibrated: 13.01.2011
- Phantom: SAM 12; Type: SAM; Serial: 1043
- Measurement SW: DASY4, V4.5 Build 19; Postprocessing SW: SEMCAD, V1.8 Build 146

Edge right position - Middle/Area Scan (51x81x1): Measurement grid: dx=15mm, dy=15mm

Maximum value of SAR (interpolated) = 0.404 mW/g

Edge right position - Middle/Zoom Scan (7x7x7) (7x7x7)/Cube 0: Measurement grid: dx=5mm, dy=5mm, dz=5mm

Reference Value = 20.6 V/m; Power Drift = -0.097 dB
Peak SAR (extrapolated) = 0.496 W/kg
SAR(1 g) = 0.376 mW/g; SAR(10 g) = 0.267 mW/g
Maximum value of SAR (measured) = 0.401 mW/g

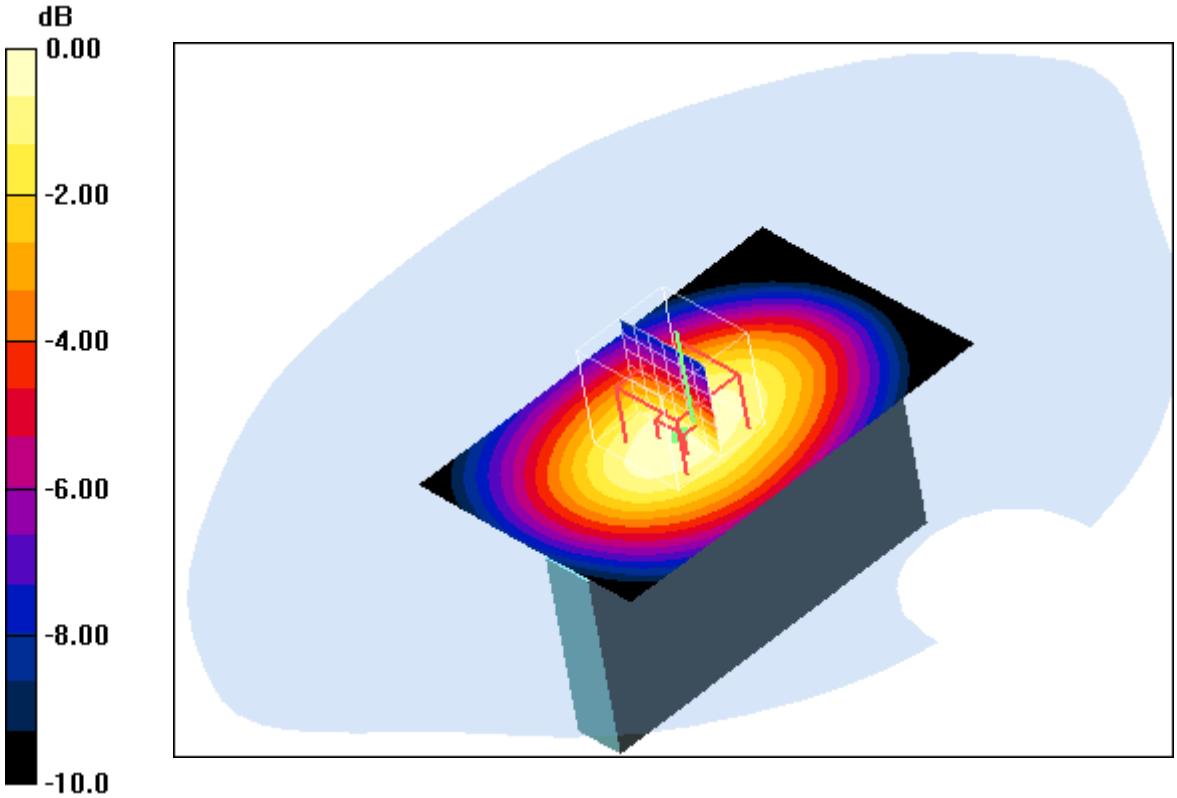

0 dB = 0.401mW/g

Additional information:
position or distance of DUT to SAM: 10 mm
ambient temperature: 22.9°C; liquid temperature: 22.3°C

Date/Time: 04.08.2011 08:15:58Date/Time: 04.08.2011 08:21:13

IEEE1528_OET65-Body-GSM850 GPRS 4TS

DUT: Sony Ericsson; Type: AAD-3880123-BV; Serial: BX902GJNRZ
Communication System: PCS 850 GPRS 4TS; Frequency: 836.6 MHz; Duty Cycle: 1:2
Medium: M850 Medium parameters used: f = 836.6 MHz; σ = 0.98 mho/m; ε_r = 54.7; ρ = 1000 kg/m^3
Phantom section: Flat Section
DASY4 Configuration:
- Probe: ET3DV6 - SN1554; ConvF(6.75, 6.75, 6.75); Calibrated: 11.05.2011
- Sensor-Surface: 4mm (Mechanical And Optical Surface Detection)
- Electronics: DAE3 Sn413; Calibrated: 13.01.2011
- Phantom: SAM 12; Type: SAM; Serial: 1043
- Measurement SW: DASY4, V4.5 Build 19; Postprocessing SW: SEMCAD, V1.8 Build 146

Edge bottom position - Middle/Area Scan (61x61x1): Measurement grid: dx=15mm, dy=15mm

Maximum value of SAR (interpolated) = 0.099 mW/g

Edge bottom position - Middle/Zoom Scan (7x7x7) (7x7x7)/Cube 0:

Measurement grid: dx=5mm, dy=5mm, dz=5mm
Reference Value = 9.07 V/m; Power Drift = 0.035 dB
Peak SAR (extrapolated) = 0.139 W/kg
SAR(1 g) = 0.088 mW/g; SAR(10 g) = 0.053 mW/g
Maximum value of SAR (measured) = 0.097 mW/g

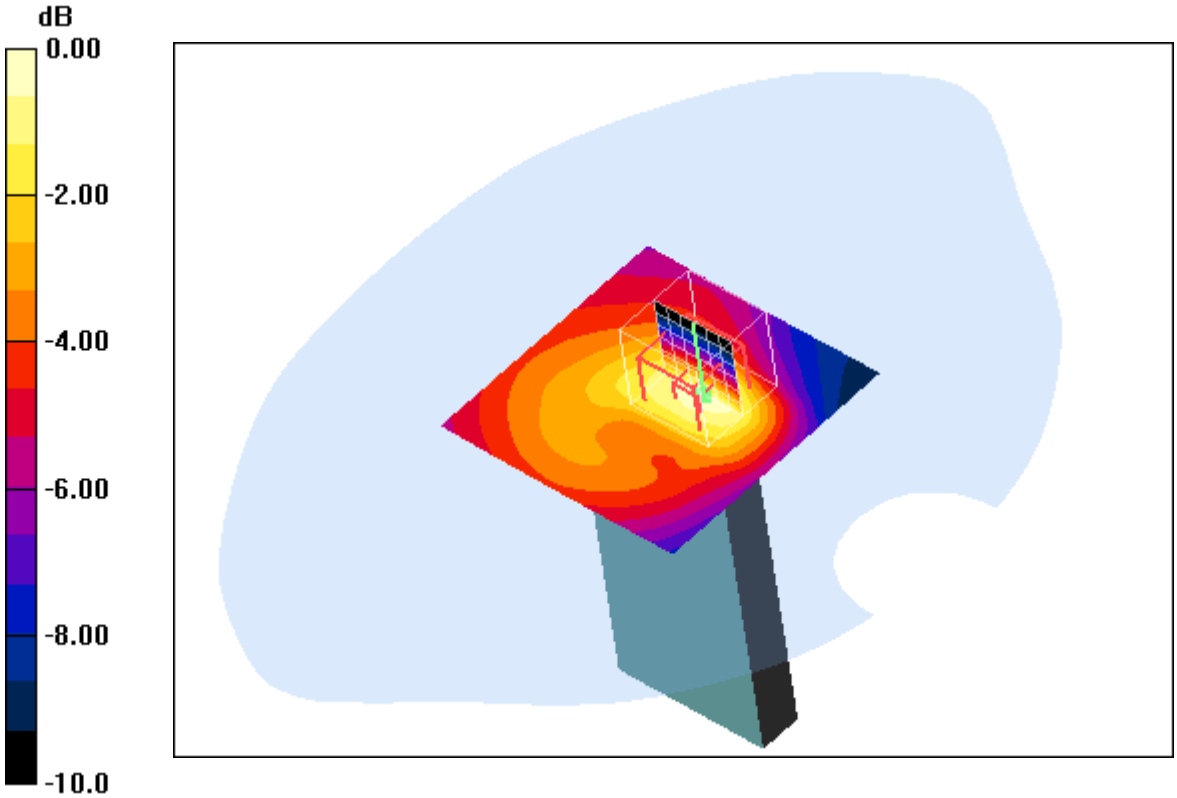

0 dB = 0.097mW/g

Additional information:
position or distance of DUT to SAM: 10 mm
ambient temperature: 22.9°C; liquid temperature: 22.3°C

Date/Time: 04.08.2011 08:40:40Date/Time: 04.08.2011 08:46:54

IEEE1528_OET65-Body-GSM850 1TS

DUT: Sony Ericsson; Type: AAD-3880123-BV; Serial: BX902GJNRZ
Communication System: GSM 850; Frequency: 848.8 MHz; Duty Cycle: 1:8
Medium: M850 Medium parameters used: f = 848.8 MHz; σ = 1 mho/m; ε_r = 54.6; ρ = 1000 kg/m^3
Phantom section: Flat Section
DASY4 Configuration:
- Probe: ET3DV6 - SN1554; ConvF(6.75, 6.75, 6.75); Calibrated: 11.05.2011
- Sensor-Surface: 4mm (Mechanical And Optical Surface Detection)
- Electronics: DAE3 Sn413; Calibrated: 13.01.2011
- Phantom: SAM 12; Type: SAM; Serial: 1043
- Measurement SW: DASY4, V4.5 Build 19; Postprocessing SW: SEMCAD, V1.8 Build 146

Rear position - High/Area Scan (51x81x1): Measurement grid: dx=15mm, dy=15mm

Maximum value of SAR (interpolated) = 0.931 mW/g

Rear position - High/Zoom Scan (7x7x7) (7x11x7)/Cube 0: Measurement grid: dx=5mm, dy=5mm, dz=5mm

Reference Value = 31.1 V/m; Power Drift = -0.182 dB
Peak SAR (extrapolated) = 1.16 W/kg
SAR(1 g) = 0.864 mW/g; SAR(10 g) = 0.607 mW/g
Maximum value of SAR (measured) = 0.923 mW/g

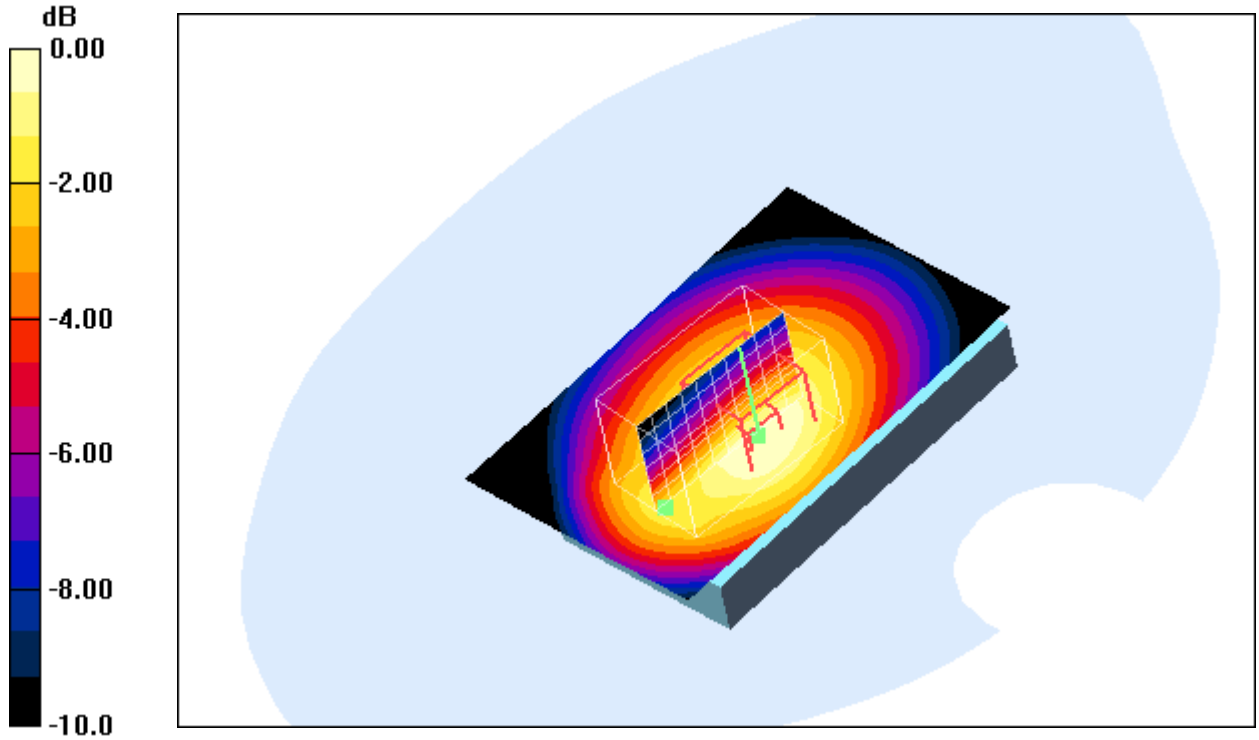

0 dB = 0.923mW/g

Additional information:
position or distance of DUT to SAM: 15 mm
ambient temperature: 22.9°C; liquid temperature: 22.3°C

Annex B.3: GSM 1900MHz head

Date/Time: 08.08.2011 08:53:33Date/Time: 08.08.2011 09:00:54

IEEE1528_OET65-LeftHandSide-GSM1900

DUT: Sony Ericsson; Type: AAD-3880123-BV; Serial: BX902GJNRZ
Communication System: GSM 1900; Frequency: 1850.2 MHz; Duty Cycle: 1:8
Medium: HSL1900 Medium parameters used: f = 1850.2 MHz; σ = 1.34 mho/m; ε_r = 40.2; ρ = 1000 kg/m^3
Phantom section: Left Section
DASY4 Configuration:
- Probe: ET3DV6 - SN1554; ConvF(5.16, 5.16, 5.16); Calibrated: 11.05.2011
- Sensor-Surface: 4mm (Mechanical And Optical Surface Detection)
- Electronics: DAE3 Sn413; Calibrated: 13.01.2011
- Phantom: SAM 12; Type: SAM; Serial: 1043
- Measurement SW: DASY4, V4.5 Build 19; Postprocessing SW: SEMCAD, V1.8 Build 146

Touch position - Low/Area Scan (51x81x1): Measurement grid: dx=15mm, dy=15mm

Maximum value of SAR (interpolated) = 1.15 mW/g

Touch position - Low/Zoom Scan (7x7x7) (8x8x7)/Cube 0: Measurement grid: dx=5mm, dy=5mm, dz=5mm

Reference Value = 27.7 V/m; Power Drift = -0.00 dB
Peak SAR (extrapolated) = 1.51 W/kg
SAR(1 g) = 1.02 mW/g; SAR(10 g) = 0.599 mW/g
Maximum value of SAR (measured) = 1.13 mW/g

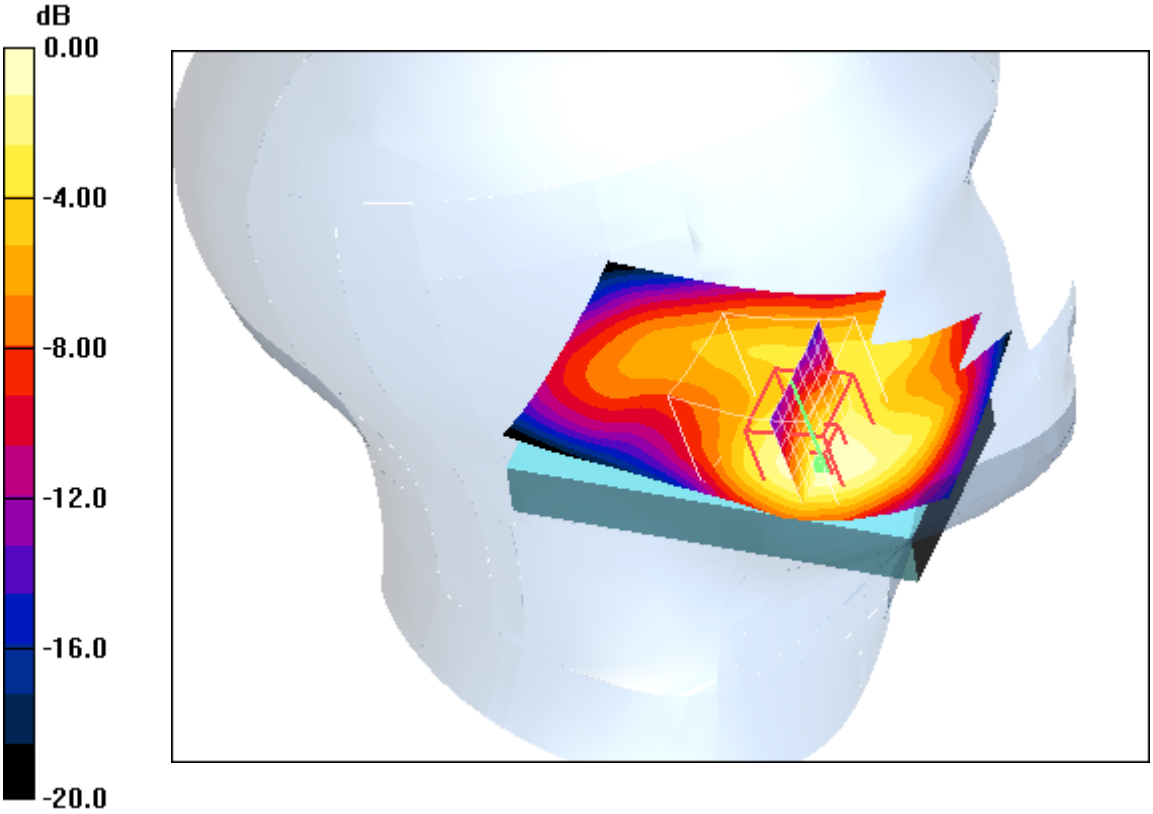

0 dB = 1.13mW/g

Additional information:
ambient temperature: 23.4°C; liquid temperature: 22.5°C

Date/Time: 08.08.2011 09:19:08Date/Time: 08.08.2011 09:25:34

IEEE1528_OET65-LeftHandSide-GSM1900

DUT: Sony Ericsson; Type: AAD-3880123-BV; Serial: BX902GJNRZ
Communication System: GSM 1900; Frequency: 1880 MHz; Duty Cycle: 1:8
Medium: HSL1900 Medium parameters used: f = 1880 MHz; σ = 1.37 mho/m; ε_r = 40.1; ρ = 1000 kg/m^3
Phantom section: Left Section
DASY4 Configuration:
- Probe: ET3DV6 - SN1554; ConvF(5.16, 5.16, 5.16); Calibrated: 11.05.2011
- Sensor-Surface: 4mm (Mechanical And Optical Surface Detection)
- Electronics: DAE3 Sn413; Calibrated: 13.01.2011
- Phantom: SAM 12; Type: SAM; Serial: 1043
- Measurement SW: DASY4, V4.5 Build 19; Postprocessing SW: SEMCAD, V1.8 Build 146

Touch position - Middle/Area Scan (51x81x1): Measurement grid: dx=15mm, dy=15mm
Maximum value of SAR (interpolated) = 0.860 mW/g

Touch position - Middle/Zoom Scan (7x7x7) (8x8x7)/Cube 0: Measurement grid: dx=5mm, dy=5mm, dz=5mm
Reference Value = 23.7 V/m; Power Drift = 0.043 dB
Peak SAR (extrapolated) = 1.15 W/kg
SAR(1 g) = 0.773 mW/g; SAR(10 g) = 0.449 mW/g
Maximum value of SAR (measured) = 0.837 mW/g

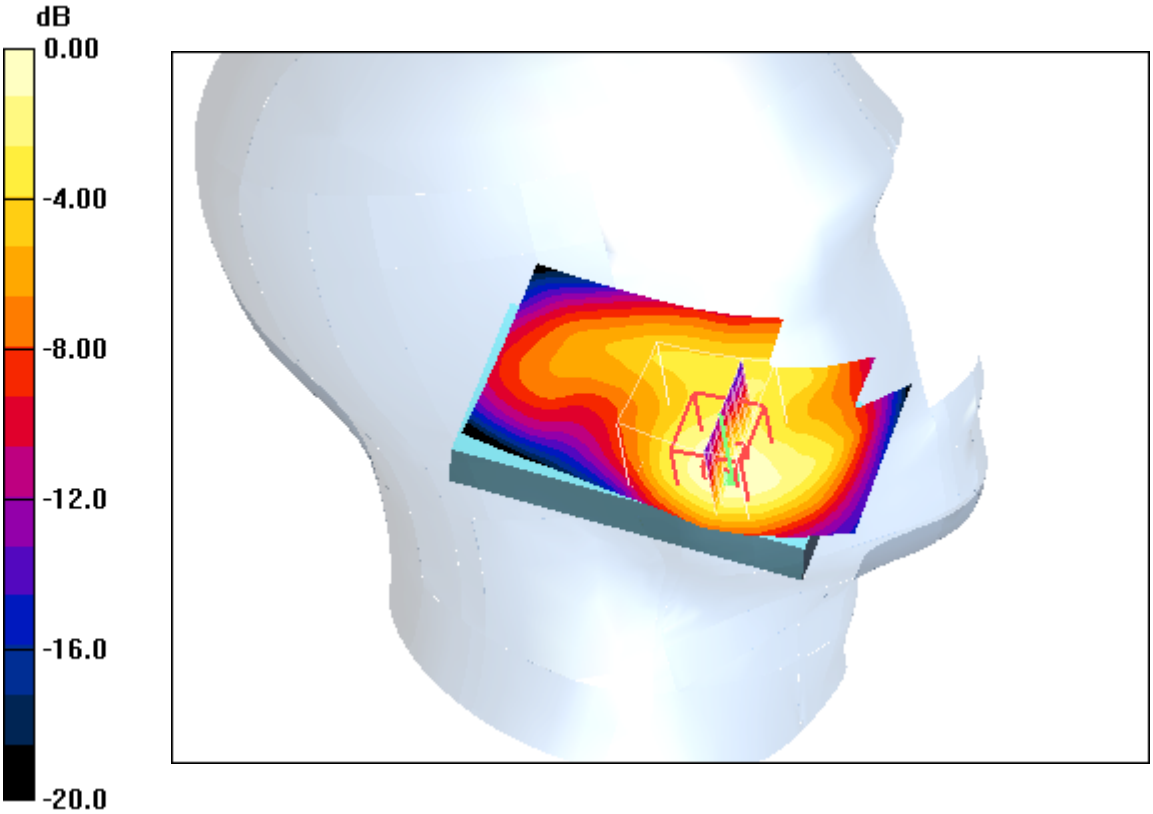

0 dB = 0.837mW/g

Additional information:
ambient temperature: 23,4°C; liquid temperature: 22,5°C

Date/Time: 08.08.2011 09:46:32Date/Time: 08.08.2011 09:52:12

IEEE1528_OET65-LeftHandSide-GSM1900

DUT: Sony Ericsson; Type: AAD-3880123-BV; Serial: BX902GJNRZ
Communication System: GSM 1900; Frequency: 1909.8 MHz; Duty Cycle: 1:8
Medium: HSL1900 Medium parameters used: f = 1909.8 MHz; σ = 1.39 mho/m; ε_r = 40; ρ = 1000 kg/m^3
Phantom section: Left Section
DASY4 Configuration:
- Probe: ET3DV6 - SN1554; ConvF(5.16, 5.16, 5.16); Calibrated: 11.05.2011
- Sensor-Surface: 4mm (Mechanical And Optical Surface Detection)
- Electronics: DAE3 Sn413; Calibrated: 13.01.2011
- Phantom: SAM 12; Type: SAM; Serial: 1043
- Measurement SW: DASY4, V4.5 Build 19; Postprocessing SW: SEMCAD, V1.8 Build 146

Touch position - High/Area Scan (51x81x1): Measurement grid: dx=15mm, dy=15mm
Maximum value of SAR (interpolated) = 0.707 mW/g

Touch position - High/Zoom Scan (7x7x7) (8x8x7)/Cube 0: Measurement grid: dx=5mm, dy=5mm, dz=5mm
Reference Value = 21.2 V/m; Power Drift = -0.052 dB
Peak SAR (extrapolated) = 0.942 W/kg
SAR(1 g) = 0.625 mW/g; SAR(10 g) = 0.364 mW/g
Maximum value of SAR (measured) = 0.686 mW/g

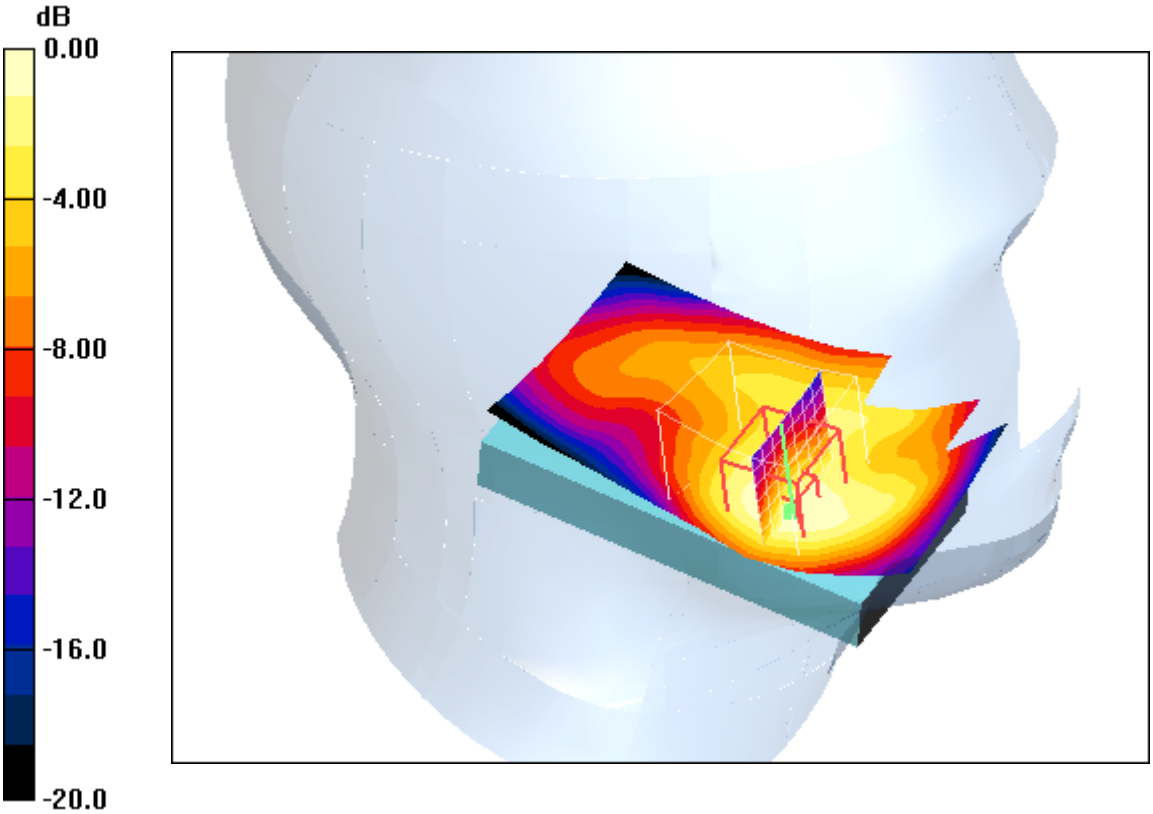

0 dB = 0.686mW/g

Additional information:
ambient temperature: 23,4°C; liquid temperature: 22,5°C

Date/Time: 08.08.2011 07:54:06Date/Time: 08.08.2011 07:59:49

IEEE1528_OET65-LeftHandSide-GSM1900

DUT: Sony Ericsson; Type: AAD-3880123-BV; Serial: BX902GJNRZ
Communication System: GSM 1900; Frequency: 1850.2 MHz; Duty Cycle: 1:8
Medium: HSL1900 Medium parameters used: f = 1850.2 MHz; σ = 1.34 mho/m; ε_r = 40.2; ρ = 1000 kg/m^3
Phantom section: Left Section
DASY4 Configuration:
- Probe: ET3DV6 - SN1554; ConvF(5.16, 5.16, 5.16); Calibrated: 11.05.2011
- Sensor-Surface: 4mm (Mechanical And Optical Surface Detection)
- Electronics: DAE3 Sn413; Calibrated: 13.01.2011
- Phantom: SAM 12; Type: SAM; Serial: 1043
- Measurement SW: DASY4, V4.5 Build 19; Postprocessing SW: SEMCAD, V1.8 Build 146

Tilt position - Low/Area Scan (51x81x1): Measurement grid: dx=15mm, dy=15mm
Maximum value of SAR (interpolated) = 0.437 mW/g

Tilt position - Low/Zoom Scan (7x7x7) (7x7x7)/Cube 0: Measurement grid: dx=5mm, dy=5mm, dz=5mm
Reference Value = 17.9 V/m; Power Drift = -0.065 dB
Peak SAR (extrapolated) = 0.568 W/kg
SAR(1 g) = 0.392 mW/g; SAR(10 g) = 0.240 mW/g
Maximum value of SAR (measured) = 0.429 mW/g

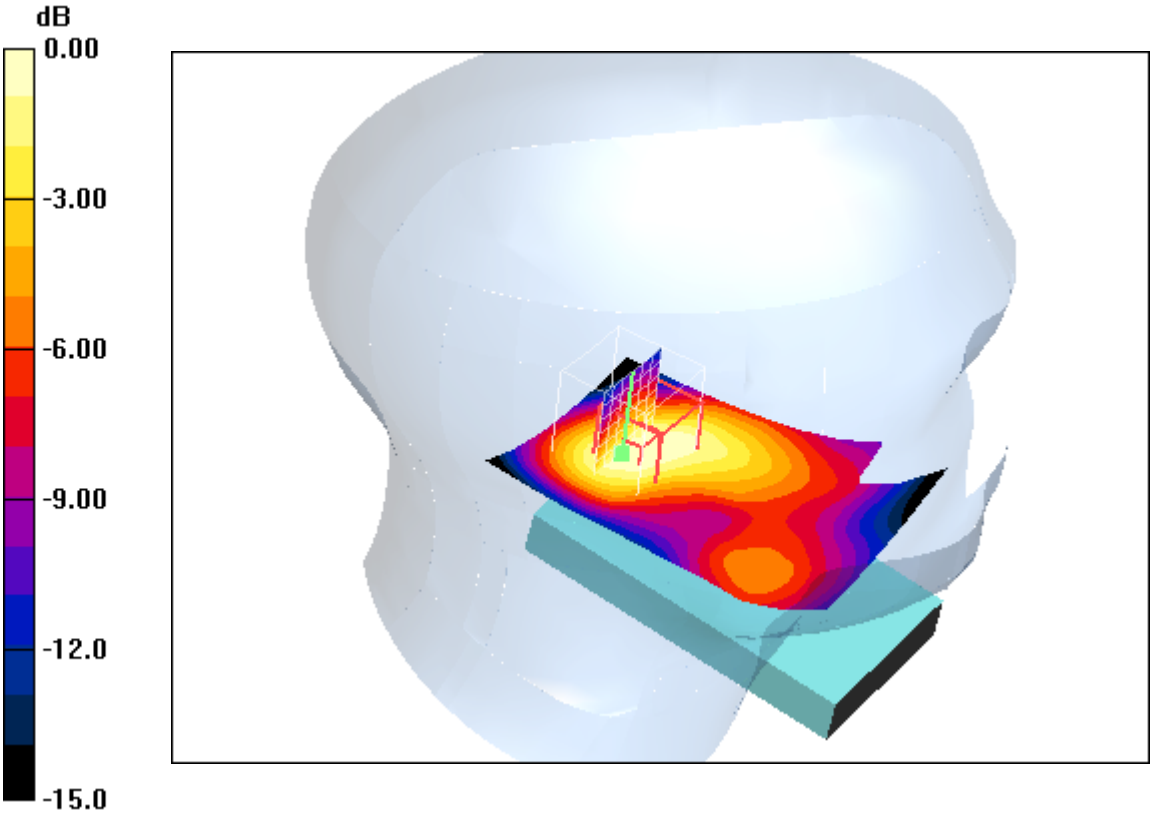

0 dB = 0.429mW/g

Additional information:
ambient temperature: 23,4°C; liquid temperature: 22,5°C

Date/Time: 08.08.2011 08:13:10Date/Time: 08.08.2011 08:18:53

IEEE1528_OET65-LeftHandSide-GSM1900

DUT: Sony Ericsson; Type: AAD-3880123-BV; Serial: BX902GJNRZ
Communication System: GSM 1900; Frequency: 1880 MHz; Duty Cycle: 1:8
Medium: HSL1900 Medium parameters used: f = 1880 MHz; σ = 1.37 mho/m; ε_r = 40.1; ρ = 1000 kg/m^3
Phantom section: Left Section
DASY4 Configuration:
- Probe: ET3DV6 - SN1554; ConvF(5.16, 5.16, 5.16); Calibrated: 11.05.2011
- Sensor-Surface: 4mm (Mechanical And Optical Surface Detection)
- Electronics: DAE3 Sn413; Calibrated: 13.01.2011
- Phantom: SAM 12; Type: SAM; Serial: 1043
- Measurement SW: DASY4, V4.5 Build 19; Postprocessing SW: SEMCAD, V1.8 Build 146

Tilt position - Middle/Area Scan (51x81x1): Measurement grid: dx=15mm, dy=15mm

Maximum value of SAR (interpolated) = 0.322 mW/g

Tilt position - Middle/Zoom Scan (7x7x7) (7x7x7)/Cube 0: Measurement grid: dx=5mm, dy=5mm, dz=5mm

Reference Value = 15.2 V/m; Power Drift = -0.020 dB
Peak SAR (extrapolated) = 0.412 W/kg
SAR(1 g) = 0.288 mW/g; SAR(10 g) = 0.178 mW/g
Maximum value of SAR (measured) = 0.314 mW/g

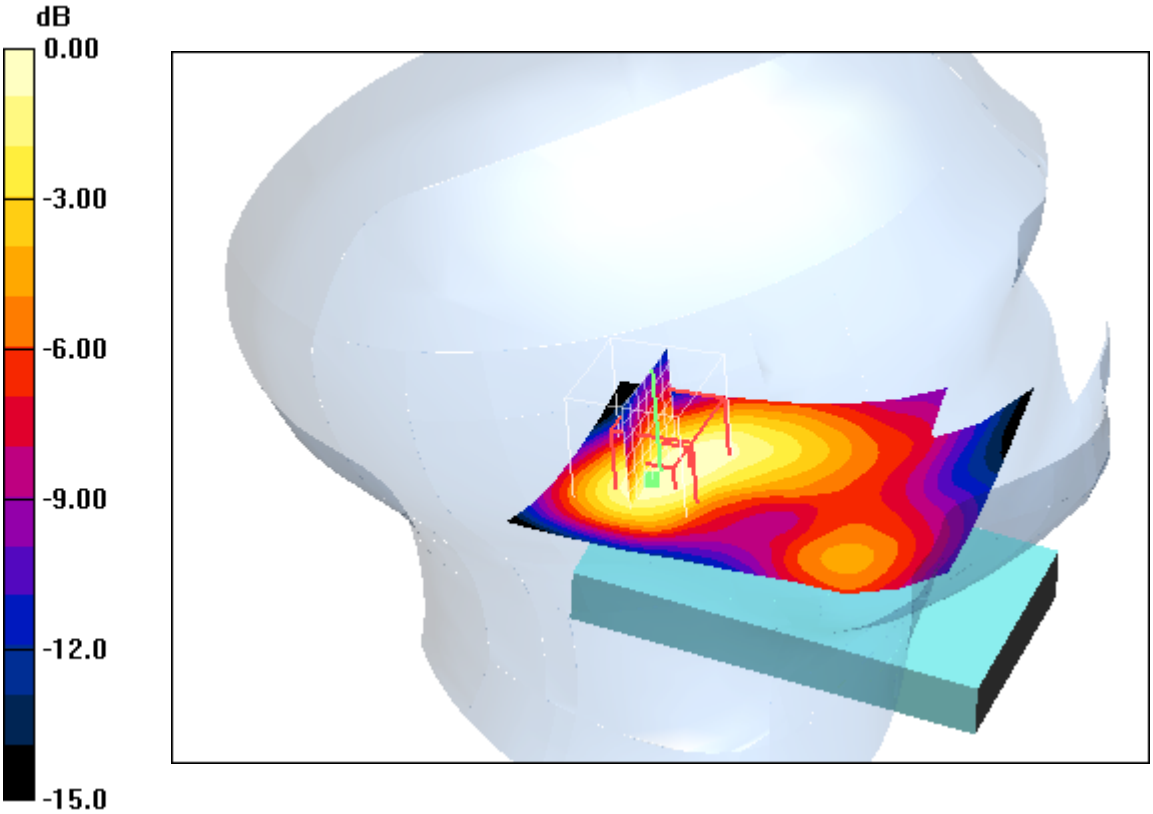

0 dB = 0.314mW/g

Additional information:
ambient temperature: 23,4°C; liquid temperature: 22,5°C

Date/Time: 08.08.2011 08:31:36Date/Time: 08.08.2011 08:37:21

IEEE1528_OET65-LeftHandSide-GSM1900

DUT: Sony Ericsson; Type: AAD-3880123-BV; Serial: BX902GJNRZ
Communication System: GSM 1900; Frequency: 1909.8 MHz; Duty Cycle: 1:8
Medium: HSL1900 Medium parameters used: f = 1909.8 MHz; σ = 1.39 mho/m; ε_r = 40; ρ = 1000 kg/m^3
Phantom section: Left Section
DASY4 Configuration:
- Probe: ET3DV6 - SN1554; ConvF(5.16, 5.16, 5.16); Calibrated: 11.05.2011
- Sensor-Surface: 4mm (Mechanical And Optical Surface Detection)
- Electronics: DAE3 Sn413; Calibrated: 13.01.2011
- Phantom: SAM 12; Type: SAM; Serial: 1043
- Measurement SW: DASY4, V4.5 Build 19; Postprocessing SW: SEMCAD, V1.8 Build 146

Tilt position - High/Area Scan (51x81x1): Measurement grid: dx=15mm, dy=15mm
Maximum value of SAR (interpolated) = 0.276 mW/g

Tilt position - High/Zoom Scan (7x7x7) (7x7x7)/Cube 0: Measurement grid: dx=5mm, dy=5mm, dz=5mm
Reference Value = 13.7 V/m; Power Drift = 0.050 dB
Peak SAR (extrapolated) = 0.359 W/kg
SAR(1 g) = 0.246 mW/g; SAR(10 g) = 0.149 mW/g
Maximum value of SAR (measured) = 0.270 mW/g

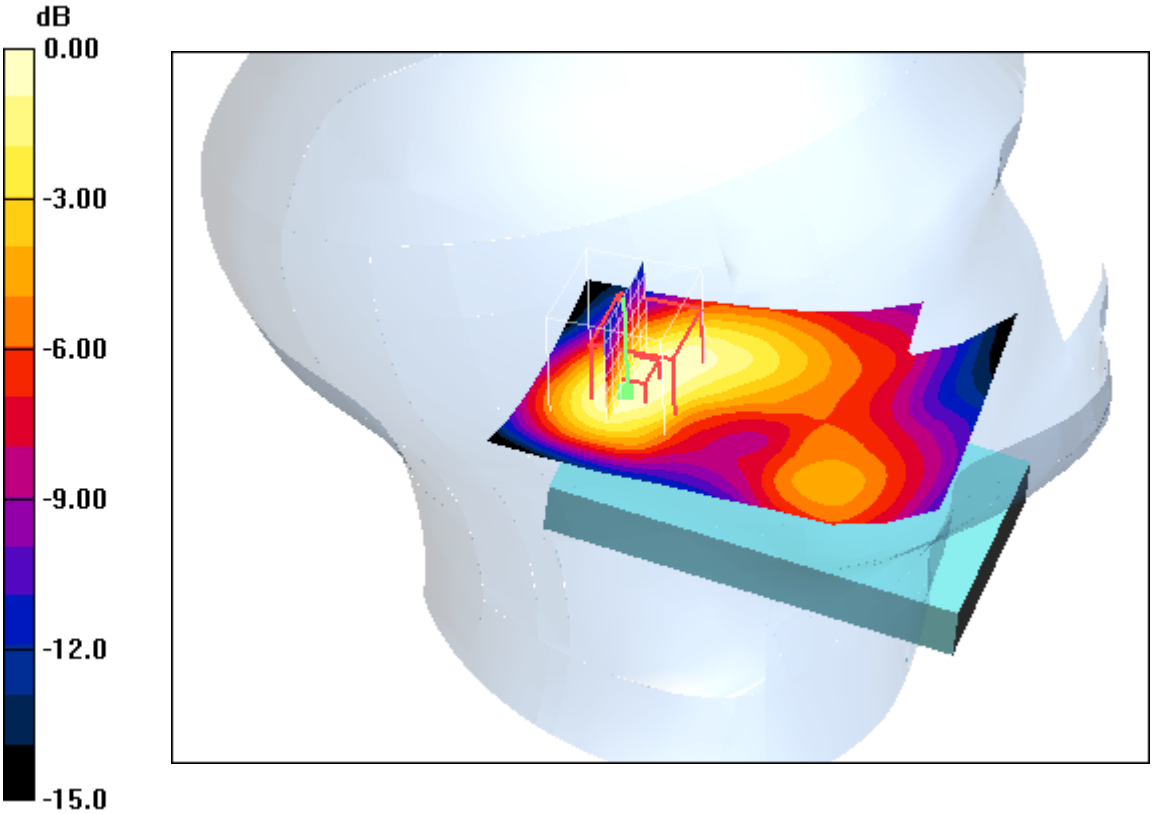

0 dB = 0.270mW/g

Additional information:
ambient temperature: 23,4°C; liquid temperature: 22,5°C

Date/Time: 08.08.2011 11:29:34Date/Time: 08.08.2011 11:38:56

IEEE1528_OET65-RightHandSide-GSM1900

DUT: Sony Ericsson; Type: AAD-3880123-BV; Serial: BX902GJNRZ
Communication System: GSM 1900; Frequency: 1850.2 MHz; Duty Cycle: 1:8
Medium: HSL1900 Medium parameters used: f = 1850.2 MHz; σ = 1.34 mho/m; ε_r = 40.2; ρ = 1000 kg/m^3
Phantom section: Right Section
DASY4 Configuration:
- Probe: ET3DV6 - SN1554; ConvF(5.16, 5.16, 5.16); Calibrated: 11.05.2011
- Sensor-Surface: 4mm (Mechanical And Optical Surface Detection)
- Electronics: DAE3 Sn413; Calibrated: 13.01.2011
- Phantom: SAM 12; Type: SAM; Serial: 1043
- Measurement SW: DASY4, V4.5 Build 19; Postprocessing SW: SEMCAD, V1.8 Build 146

Touch position - Low/Area Scan (51x81x1): Measurement grid: dx=15mm, dy=15mm
Maximum value of SAR (interpolated) = 0.898 mW/g

Touch position - Low/Zoom Scan (7x7x7) (11x7x7)/Cube 0: Measurement grid: dx=5mm, dy=5mm, dz=5mm
Reference Value = 27.0 V/m; Power Drift = 0.043 dB
Peak SAR (extrapolated) = 1.27 W/kg
SAR(1 g) = 0.906 mW/g; SAR(10 g) = 0.540 mW/g
Maximum value of SAR (measured) = 1.01 mW/g

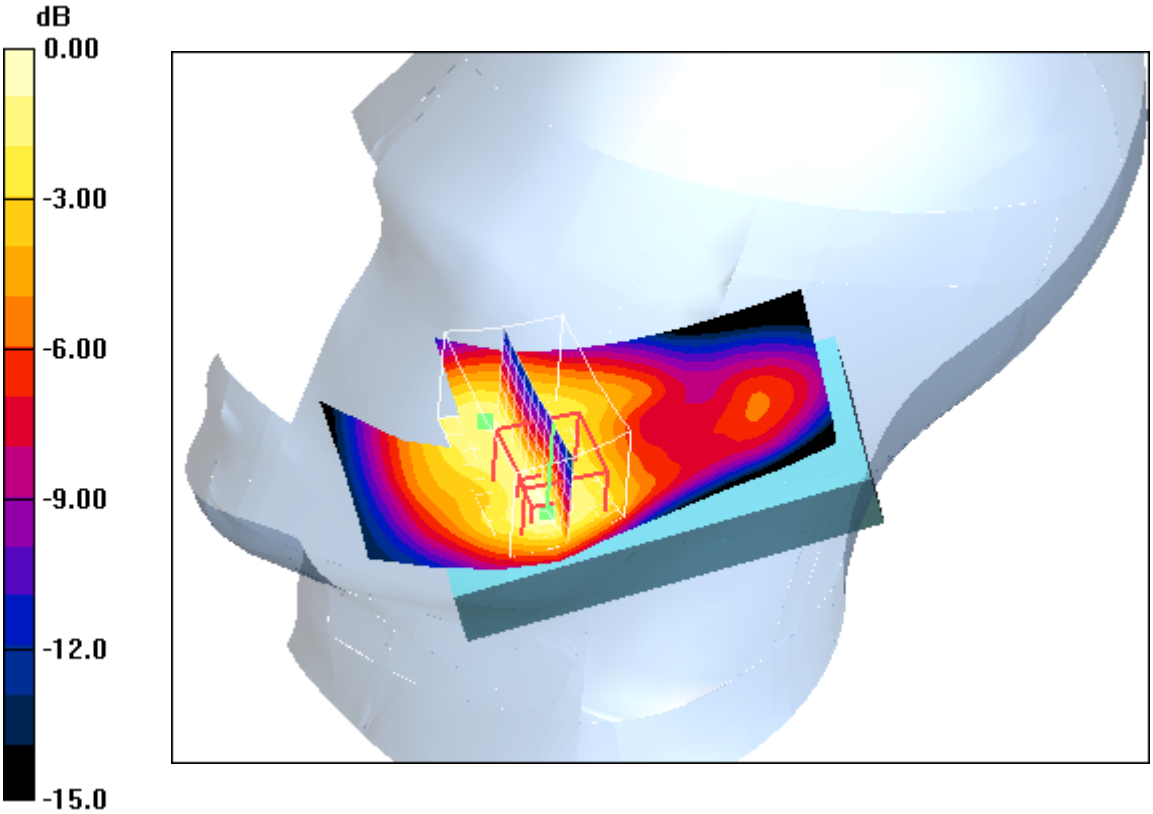

0 dB = 1.01mW/g

Additional information:
ambient temperature: 23.6°C; liquid temperature: 23.2°C

Date/Time: 08.08.2011 12:34:23Date/Time: 08.08.2011 12:40:00

IEEE1528_OET65-RightHandSide-GSM1900

DUT: Sony Ericsson; Type: AAD-3880123-BV; Serial: BX902GJNRZ
Communication System: GSM 1900; Frequency: 1880 MHz; Duty Cycle: 1:8
Medium: HSL1900 Medium parameters used: f = 1880 MHz; σ = 1.37 mho/m; ε_r = 40.1; ρ = 1000 kg/m^3
Phantom section: Right Section
DASY4 Configuration:
- Probe: ET3DV6 - SN1554; ConvF(5.16, 5.16, 5.16); Calibrated: 11.05.2011
- Sensor-Surface: 4mm (Mechanical And Optical Surface Detection)
- Electronics: DAE3 Sn413; Calibrated: 13.01.2011
- Phantom: SAM 12; Type: SAM; Serial: 1043
- Measurement SW: DASY4, V4.5 Build 19; Postprocessing SW: SEMCAD, V1.8 Build 146

Touch position - Middle/Area Scan (51x81x1): Measurement grid: dx=15mm, dy=15mm

Maximum value of SAR (interpolated) = 0.732 mW/g

Touch position - Middle/Zoom Scan (7x7x7) (11x7x7)/Cube 0: Measurement grid: dx=5mm, dy=5mm, dz=5mm

Reference Value = 23.8 V/m; Power Drift = -0.049 dB
Peak SAR (extrapolated) = 0.987 W/kg
SAR(1 g) = 0.700 mW/g; SAR(10 g) = 0.416 mW/g
Maximum value of SAR (measured) = 0.772 mW/g

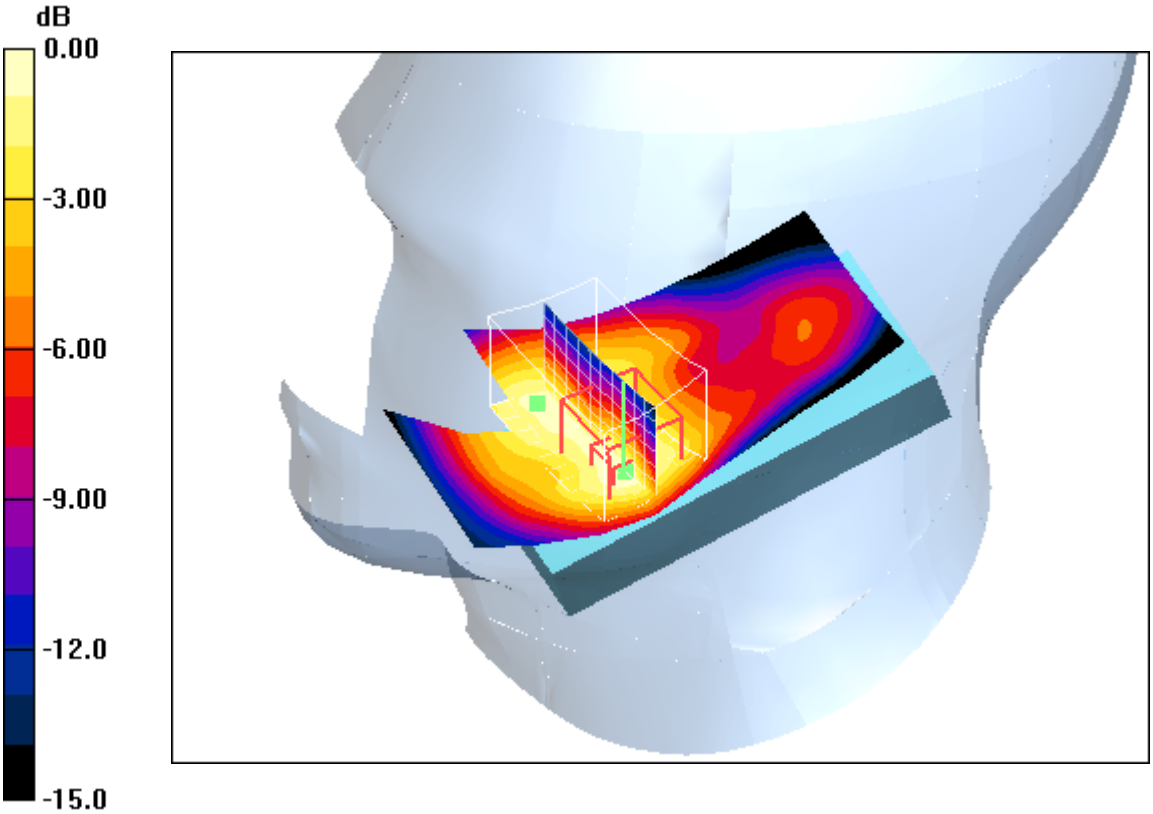

0 dB = 0.772mW/g

Additional information:
ambient temperature: 23.6°C; liquid temperature: 23.2°C

Date/Time: 08.08.2011 12:01:13Date/Time: 08.08.2011 12:12:32

IEEE1528_OET65-RightHandSide-GSM1900

DUT: Sony Ericsson; Type: AAD-3880123-BV; Serial: BX902GJNRZ
Communication System: GSM 1900; Frequency: 1909.8 MHz; Duty Cycle: 1:8
Medium: HSL1900 Medium parameters used: f = 1909.8 MHz; σ = 1.39 mho/m; ε_r = 40; ρ = 1000 kg/m^3
Phantom section: Right Section
DASY4 Configuration:
- Probe: ET3DV6 - SN1554; ConvF(5.16, 5.16, 5.16); Calibrated: 11.05.2011
- Sensor-Surface: 4mm (Mechanical And Optical Surface Detection)
- Electronics: DAE3 Sn413; Calibrated: 13.01.2011
- Phantom: SAM 12; Type: SAM; Serial: 1043
- Measurement SW: DASY4, V4.5 Build 19; Postprocessing SW: SEMCAD, V1.8 Build 146

Touch position - High/Area Scan (51x81x1): Measurement grid: dx=15mm, dy=15mm

Maximum value of SAR (interpolated) = 0.655 mW/g

Touch position - High/Zoom Scan (7x7x7) (11x7x7)/Cube 0: Measurement grid: dx=5mm, dy=5mm, dz=5mm

Reference Value = 21.9 V/m; Power Drift = -0.083 dB
Peak SAR (extrapolated) = 0.894 W/kg
SAR(1 g) = 0.621 mW/g; SAR(10 g) = 0.364 mW/g
Maximum value of SAR (measured) = 0.682 mW/g

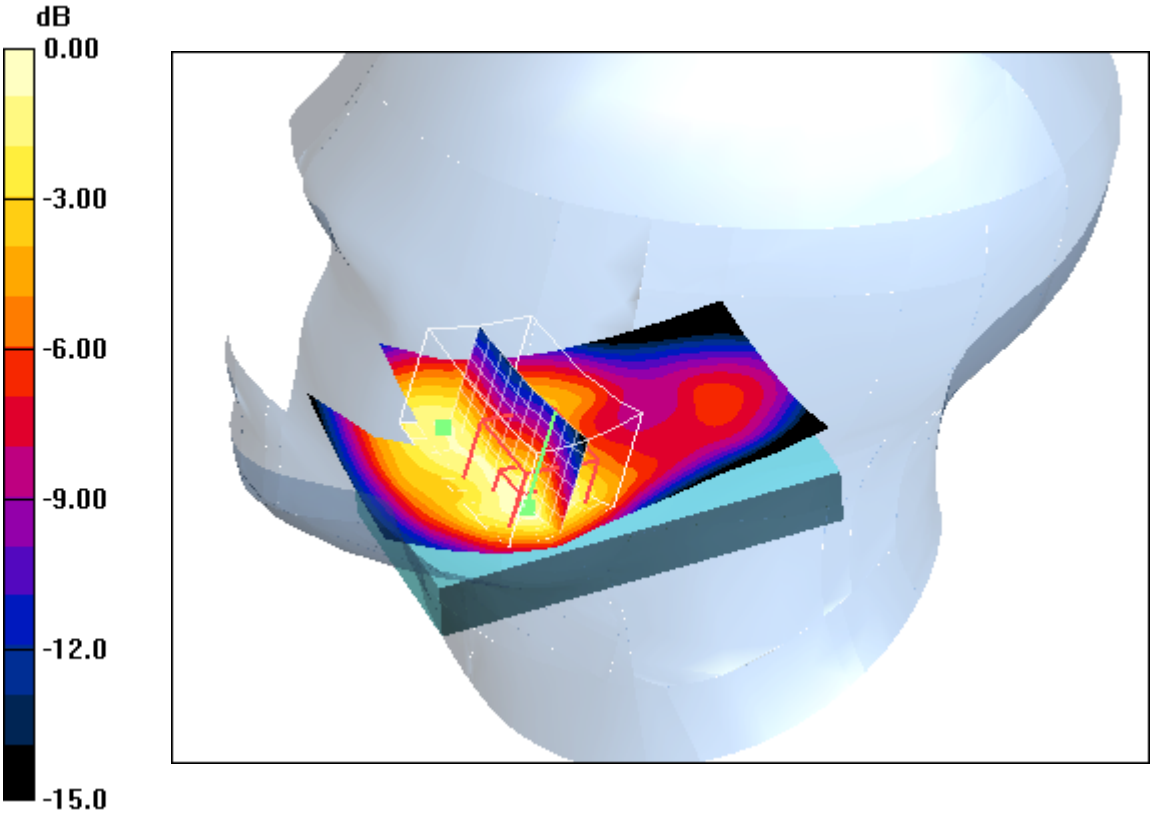

0 dB = 0.682mW/g

Additional information:
ambient temperature: 23.6°C; liquid temperature: 23.2°C

Date/Time: 07.08.2011 17:04:07Date/Time: 07.08.2011 17:10:23

IEEE1528_OET65-RightHandSide-GSM1900

DUT: Sony Ericsson; Type: AAD-3880123-BV; Serial: BX902GJNRZ
Communication System: GSM 1900; Frequency: 1850.2 MHz; Duty Cycle: 1:8
Medium: HSL1900 Medium parameters used: f = 1850.2 MHz; σ = 1.34 mho/m; ε_r = 40.2; ρ = 1000 kg/m^3
Phantom section: Right Section
DASY4 Configuration:
- Probe: ET3DV6 - SN1554; ConvF(5.16, 5.16, 5.16); Calibrated: 11.05.2011
- Sensor-Surface: 4mm (Mechanical And Optical Surface Detection)
- Electronics: DAE3 Sn413; Calibrated: 13.01.2011
- Phantom: SAM 12; Type: SAM; Serial: 1043
- Measurement SW: DASY4, V4.5 Build 19; Postprocessing SW: SEMCAD, V1.8 Build 146

Tilt position - Low/Area Scan (51x81x1): Measurement grid: dx=15mm, dy=15mm
Maximum value of SAR (interpolated) = 0.575 mW/g

Tilt position - Low/Zoom Scan (7x7x7) (8x8x7)/Cube 0: Measurement grid: dx=5mm, dy=5mm, dz=5mm
Reference Value = 19.4 V/m; Power Drift = -0.023 dB
Peak SAR (extrapolated) = 0.687 W/kg
SAR(1 g) = 0.490 mW/g; SAR(10 g) = 0.299 mW/g
Maximum value of SAR (measured) = 0.539 mW/g

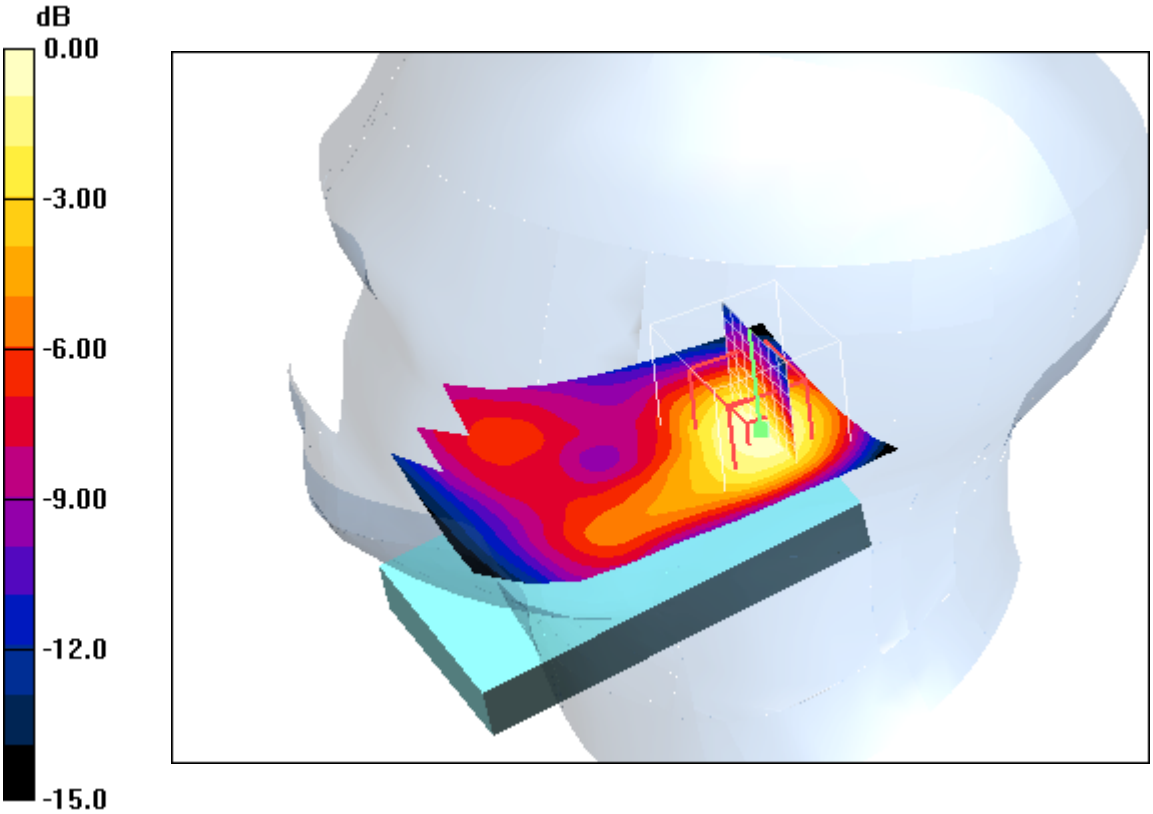

0 dB = 0.539mW/g

Additional information:
ambient temperature: 23.6°C; liquid temperature: 23.2°C

Date/Time: 07.08.2011 16:42:06Date/Time: 07.08.2011 16:47:45

IEEE1528_OET65-RightHandSide-GSM1900

DUT: Sony Ericsson; Type: AAD-3880123-BV; Serial: BX902GJNRZ
Communication System: GSM 1900; Frequency: 1880 MHz; Duty Cycle: 1:8
Medium: HSL1900 Medium parameters used: f = 1880 MHz; σ = 1.37 mho/m; ε_r = 40.1; ρ = 1000 kg/m^3
Phantom section: Right Section
DASY4 Configuration:
- Probe: ET3DV6 - SN1554; ConvF(5.16, 5.16, 5.16); Calibrated: 11.05.2011
- Sensor-Surface: 4mm (Mechanical And Optical Surface Detection)
- Electronics: DAE3 Sn413; Calibrated: 13.01.2011
- Phantom: SAM 12; Type: SAM; Serial: 1043
- Measurement SW: DASY4, V4.5 Build 19; Postprocessing SW: SEMCAD, V1.8 Build 146

Tilt position - Middle/Area Scan (51x81x1): Measurement grid: dx=15mm, dy=15mm
Maximum value of SAR (interpolated) = 0.467 mW/g

Tilt position - Middle/Zoom Scan (7x7x7) (8x8x7)/Cube 0: Measurement grid: dx=5mm, dy=5mm, dz=5mm
Reference Value = 17.3 V/m; Power Drift = 0.036 dB
Peak SAR (extrapolated) = 0.584 W/kg
SAR(1 g) = 0.402 mW/g; SAR(10 g) = 0.237 mW/g
Maximum value of SAR (measured) = 0.452 mW/g

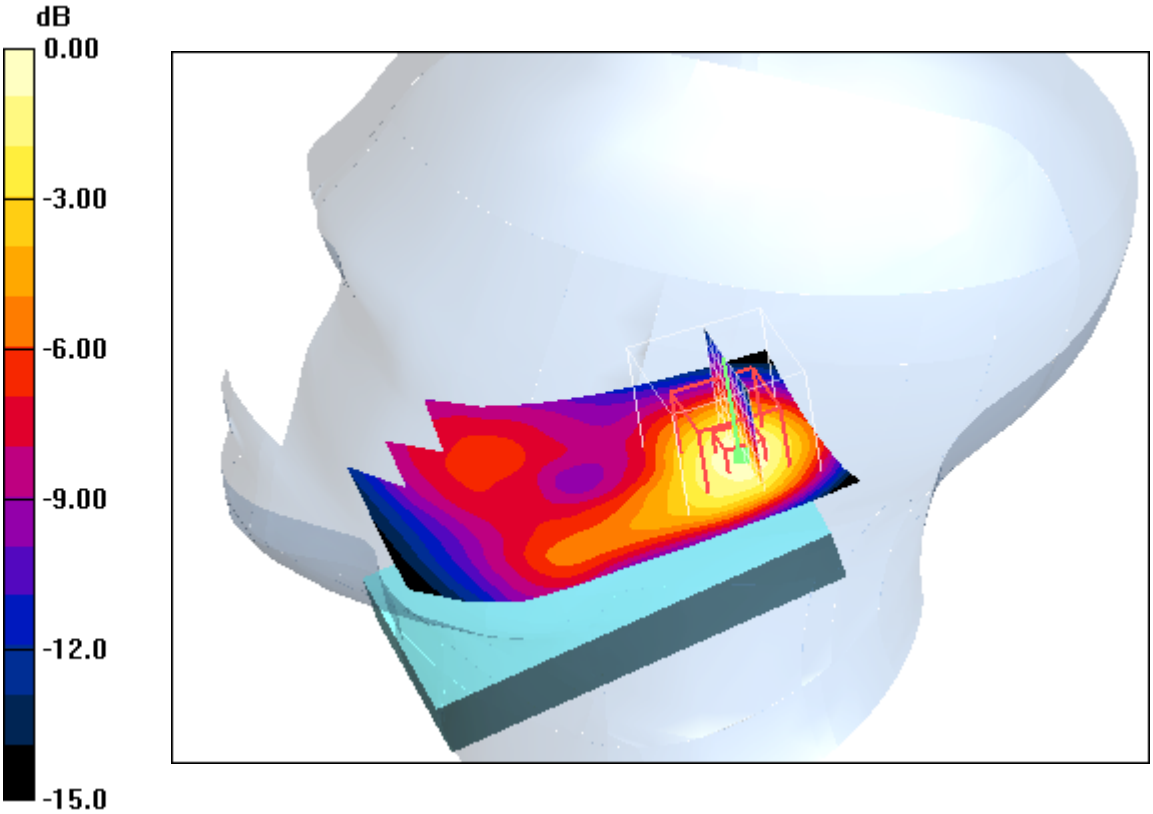

0 dB = 0.452mW/g

Additional information:
ambient temperature: 23.6°C; liquid temperature: 23.2°C

Date/Time: 07.08.2011 16:19:25Date/Time: 07.08.2011 16:25:58

IEEE1528_OET65-RightHandSide-GSM1900

DUT: Sony Ericsson; Type: AAD-3880123-BV; Serial: BX902GJNRZ
Communication System: GSM 1900; Frequency: 1909.8 MHz; Duty Cycle: 1:8
Medium: HSL1900 Medium parameters used: f = 1909.8 MHz; σ = 1.39 mho/m; ε_r = 40; ρ = 1000 kg/m^3
Phantom section: Right Section
DASY4 Configuration:
- Probe: ET3DV6 - SN1554; ConvF(5.16, 5.16, 5.16); Calibrated: 11.05.2011
- Sensor-Surface: 4mm (Mechanical And Optical Surface Detection)
- Electronics: DAE3 Sn413; Calibrated: 13.01.2011
- Phantom: SAM 12; Type: SAM; Serial: 1043
- Measurement SW: DASY4, V4.5 Build 19; Postprocessing SW: SEMCAD, V1.8 Build 146

Tilt position - High/Area Scan (51x81x1): Measurement grid: dx=15mm, dy=15mm
Maximum value of SAR (interpolated) = 0.393 mW/g

Tilt position - High/Zoom Scan (7x7x7) (8x8x7)/Cube 0: Measurement grid: dx=5mm, dy=5mm, dz=5mm
Reference Value = 15.1 V/m; Power Drift = 0.060 dB
Peak SAR (extrapolated) = 0.456 W/kg
SAR(1 g) = 0.311 mW/g; SAR(10 g) = 0.185 mW/g
Maximum value of SAR (measured) = 0.342 mW/g

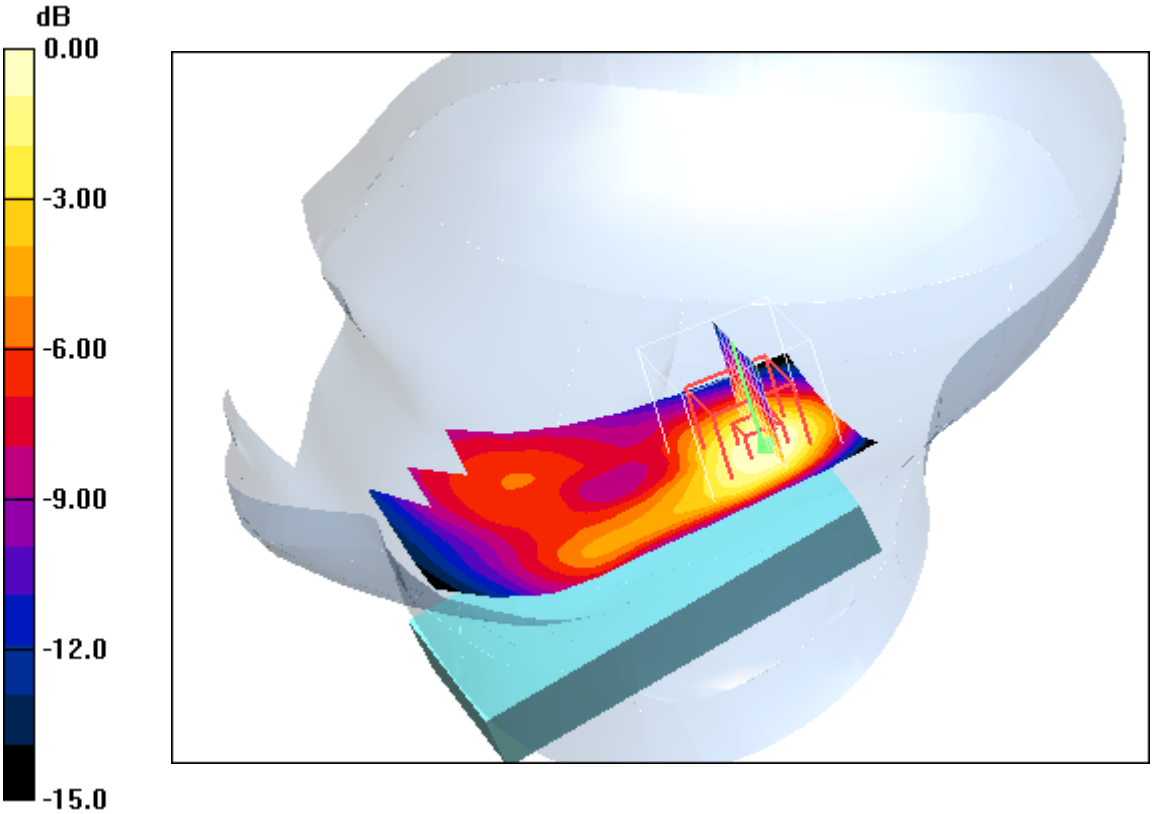

0 dB = 0.342mW/g

Additional information:
ambient temperature: 23.6°C; liquid temperature: 23.2°C

Annex B.4: GSM 1900MHz body

Date/Time: 04.08.2011 10:30:22Date/Time: 04.08.2011 10:36:36

IEEE1528_OET65-Body-GSM1900 GPRS 4TS

DUT: Sony Ericsson; Type: AAD-3880123-BV; Serial: BX902GJNRZ
Communication System: PCS 1900 GPRS 4TS; Frequency: 1850.2 MHz; Duty Cycle: 1:2
Medium: M1900 Medium parameters used: f = 1850.2 MHz; σ = 1.47 mho/m; ε_r = 52.8; ρ = 1000 kg/m^3
Phantom section: Flat Section
DASY4 Configuration:
- Probe: ET3DV6 - SN1554; ConvF(4.42, 4.42, 4.42); Calibrated: 11.05.2011
- Sensor-Surface: 4mm (Mechanical And Optical Surface Detection)
- Electronics: DAE3 Sn413; Calibrated: 13.01.2011
- Phantom: SAM 12; Type: SAM; Serial: 1043
- Measurement SW: DASY4, V4.5 Build 19; Postprocessing SW: SEMCAD, V1.8 Build 146

Front position - Low/Area Scan (51x81x1): Measurement grid: dx=15mm, dy=15mm

Maximum value of SAR (interpolated) = 0.994 mW/g

Front position - Low/Zoom Scan (7x7x7) (7x7x7)/Cube 0: Measurement grid: dx=5mm, dy=5mm, dz=5mm

Reference Value = 26.8 V/m; Power Drift = -0.195 dB
Peak SAR (extrapolated) = 1.47 W/kg
SAR(1 g) = 0.927 mW/g; SAR(10 g) = 0.544 mW/g
Maximum value of SAR (measured) = 1.02 mW/g

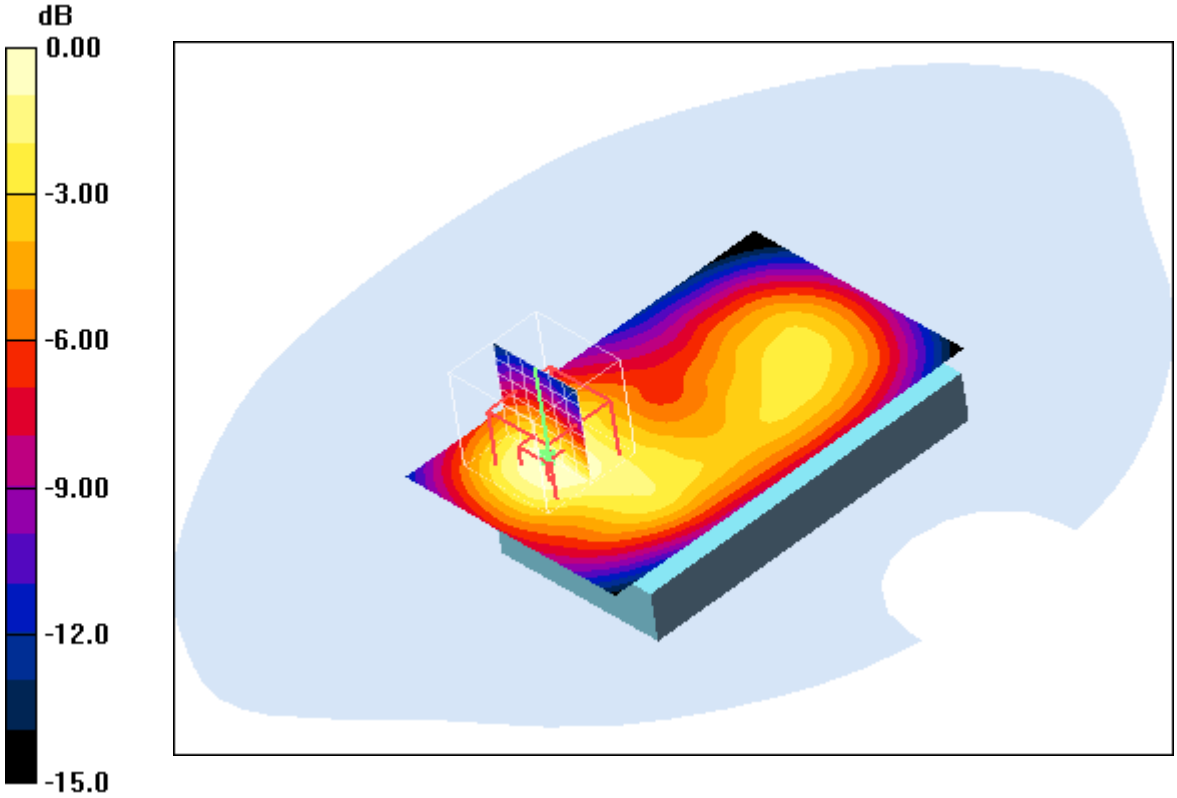

0 dB = 1.02mW/g

Additional information:
position or distance of DUT to SAM: 10 mm
ambient temperature: 23.7°C; liquid temperature: 23.3°C

Date/Time: 04.08.2011 10:50:12Date/Time: 04.08.2011 10:56:39

IEEE1528_OET65-Body-GSM1900 GPRS 4TS

DUT: Sony Ericsson; Type: AAD-3880123-BV; Serial: BX902GJNRZ
Communication System: PCS 1900 GPRS 4TS; Frequency: 1880 MHz; Duty Cycle: 1:2
Medium: M1900 Medium parameters used: f = 1880 MHz; σ = 1.5 mho/m; ε_r = 52.7; ρ = 1000 kg/m^3
Phantom section: Flat Section
DASY4 Configuration:
- Probe: ET3DV6 - SN1554; ConvF(4.42, 4.42, 4.42); Calibrated: 11.05.2011
- Sensor-Surface: 4mm (Mechanical And Optical Surface Detection)
- Electronics: DAE3 Sn413; Calibrated: 13.01.2011
- Phantom: SAM 12; Type: SAM; Serial: 1043
- Measurement SW: DASY4, V4.5 Build 19; Postprocessing SW: SEMCAD, V1.8 Build 146

Front position - Middle/Area Scan (51x81x1): Measurement grid: dx=15mm, dy=15mm

Maximum value of SAR (interpolated) = 0.721 mW/g

Front position - Middle/Zoom Scan (7x7x7) (7x7x7)/Cube 0: Measurement grid: dx=5mm, dy=5mm, dz=5mm

Reference Value = 22.6 V/m; Power Drift = -0.068 dB
Peak SAR (extrapolated) = 1.08 W/kg
SAR(1 g) = 0.668 mW/g; SAR(10 g) = 0.391 mW/g
Maximum value of SAR (measured) = 0.732 mW/g

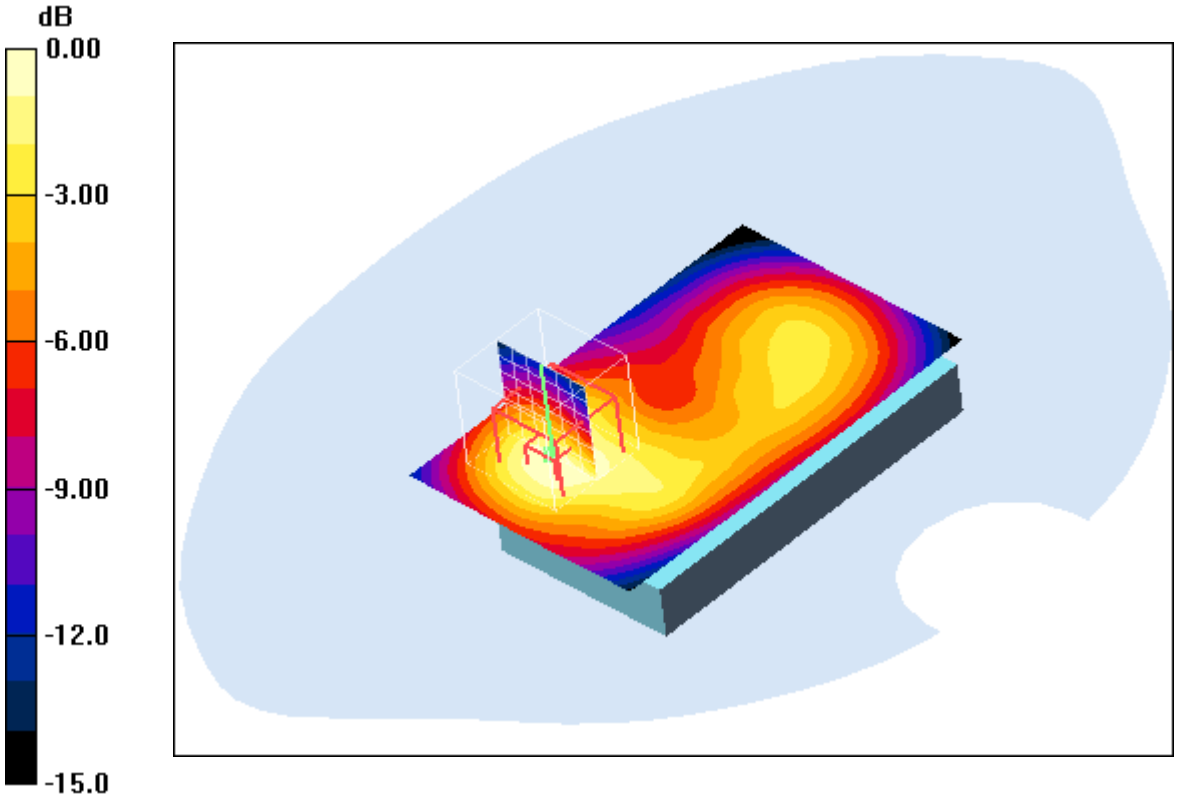

0 dB = 0.732mW/g

Additional information:
position or distance of DUT to SAM: 10 mm
ambient temperature: 23.7°C; liquid temperature: 23.3°C

Date/Time: 04.08.2011 11:16:20Date/Time: 04.08.2011 11:21:39

IEEE1528_OET65-Body-GSM1900 GPRS 4TS

DUT: Sony Ericsson; Type: AAD-3880123-BV; Serial: BX902GJNRZ
Communication System: PCS 1900 GPRS 4TS; Frequency: 1909.8 MHz; Duty Cycle: 1:2
Medium: M1900 Medium parameters used: f = 1909.8 MHz; σ = 1.53 mho/m; ε_r = 52.6; ρ = 1000 kg/m^3
Phantom section: Flat Section
DASY4 Configuration:
- Probe: ET3DV6 - SN1554; ConvF(4.42, 4.42, 4.42); Calibrated: 11.05.2011
- Sensor-Surface: 4mm (Mechanical And Optical Surface Detection)
- Electronics: DAE3 Sn413; Calibrated: 13.01.2011
- Phantom: SAM 12; Type: SAM; Serial: 1043
- Measurement SW: DASY4, V4.5 Build 19; Postprocessing SW: SEMCAD, V1.8 Build 146

Front position - High/Area Scan (51x81x1): Measurement grid: dx=15mm, dy=15mm

Maximum value of SAR (interpolated) = 0.565 mW/g

Front position - High/Zoom Scan (7x7x7) (7x7x7)/Cube 0: Measurement grid: dx=5mm, dy=5mm, dz=5mm

Reference Value = 20.2 V/m; Power Drift = -0.069 dB
Peak SAR (extrapolated) = 0.855 W/kg
SAR(1 g) = 0.523 mW/g; SAR(10 g) = 0.304 mW/g
Maximum value of SAR (measured) = 0.571 mW/g

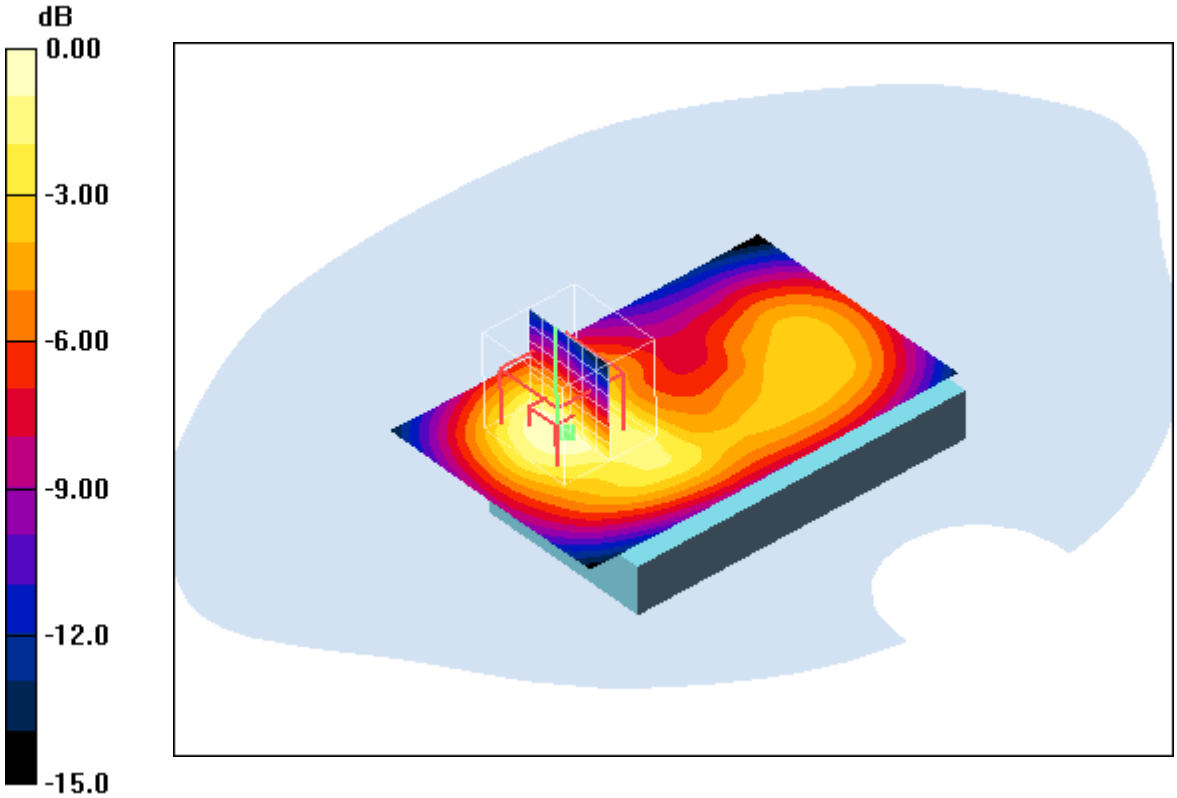

0 dB = 0.571mW/g

Additional information:
position or distance of DUT to SAM: 10 mm
ambient temperature: 23.7°C; liquid temperature: 23.3°C

Date/Time: 04.08.2011 12:58:29Date/Time: 04.08.2011 13:04:17

IEEE1528_OET65-Body-GSM1900 GPRS 4TS

DUT: Sony Ericsson; Type: AAD-3880123-BV; Serial: BX902GJNRZ
Communication System: PCS 1900 GPRS 4TS; Frequency: 1850.2 MHz; Duty Cycle: 1:2
Medium: M1900 Medium parameters used: f = 1850.2 MHz; σ = 1.47 mho/m; ε_r = 52.8; ρ = 1000 kg/m^3
Phantom section: Flat Section
DASY4 Configuration:
- Probe: ET3DV6 - SN1554; ConvF(4.42, 4.42, 4.42); Calibrated: 11.05.2011
- Sensor-Surface: 4mm (Mechanical And Optical Surface Detection)
- Electronics: DAE3 Sn413; Calibrated: 13.01.2011
- Phantom: SAM 12; Type: SAM; Serial: 1043
- Measurement SW: DASY4, V4.5 Build 19; Postprocessing SW: SEMCAD, V1.8 Build 146

Rear position - Low/Area Scan (51x81x1): Measurement grid: dx=15mm, dy=15mm

Maximum value of SAR (interpolated) = 1.21 mW/g

Rear position - Low/Zoom Scan (7x7x7) (7x7x7)/Cube 0: Measurement grid: dx=5mm, dy=5mm, dz=5mm

Reference Value = 28.9 V/m; Power Drift = -0.148 dB
Peak SAR (extrapolated) = 1.60 W/kg
SAR(1 g) = 1.07 mW/g; SAR(10 g) = 0.645 mW/g
Maximum value of SAR (measured) = 1.16 mW/g

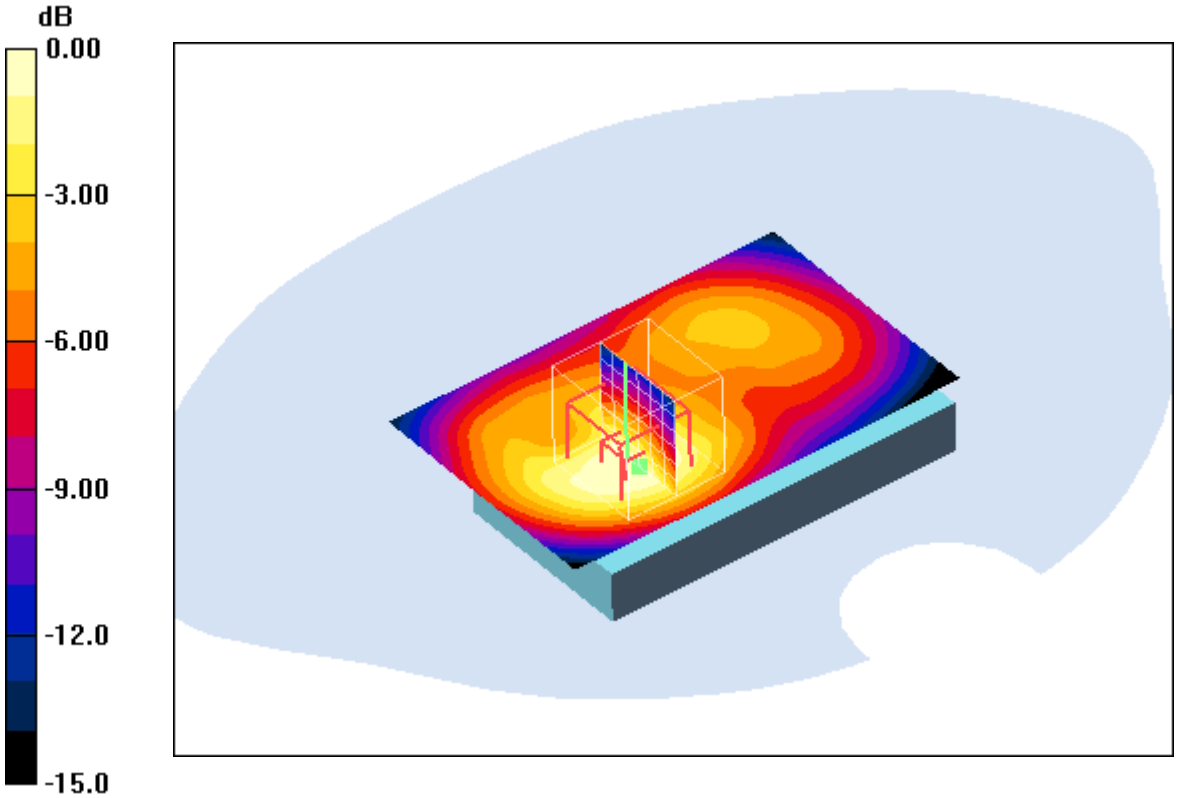

0 dB = 1.16mW/g

Additional information:
position or distance of DUT to SAM: 10 mm
ambient temperature: 23.7°C; liquid temperature: 23.3°C

Date/Time: 04.08.2011 13:16:38Date/Time: 04.08.2011 13:21:59

IEEE1528_OET65-Body-GSM1900 GPRS 4TS

DUT: Sony Ericsson; Type: AAD-3880123-BV; Serial: BX902GJNRZ
Communication System: PCS 1900 GPRS 4TS; Frequency: 1880 MHz; Duty Cycle: 1:2
Medium: M1900 Medium parameters used: f = 1880 MHz; σ = 1.5 mho/m; ε_r = 52.7; ρ = 1000 kg/m^3
Phantom section: Flat Section
DASY4 Configuration:
- Probe: ET3DV6 - SN1554; ConvF(4.42, 4.42, 4.42); Calibrated: 11.05.2011
- Sensor-Surface: 4mm (Mechanical And Optical Surface Detection)
- Electronics: DAE3 Sn413; Calibrated: 13.01.2011
- Phantom: SAM 12; Type: SAM; Serial: 1043
- Measurement SW: DASY4, V4.5 Build 19; Postprocessing SW: SEMCAD, V1.8 Build 146

Rear position - Middle/Area Scan (51x81x1): Measurement grid: dx=15mm, dy=15mm

Maximum value of SAR (interpolated) = 0.951 mW/g

Rear position - Middle/Zoom Scan (7x7x7) (7x7x7)/Cube 0: Measurement grid: dx=5mm, dy=5mm, dz=5mm

Reference Value = 24.9 V/m; Power Drift = 0.035 dB
Peak SAR (extrapolated) = 1.33 W/kg
SAR(1 g) = 0.875 mW/g; SAR(10 g) = 0.519 mW/g
Maximum value of SAR (measured) = 0.952 mW/g

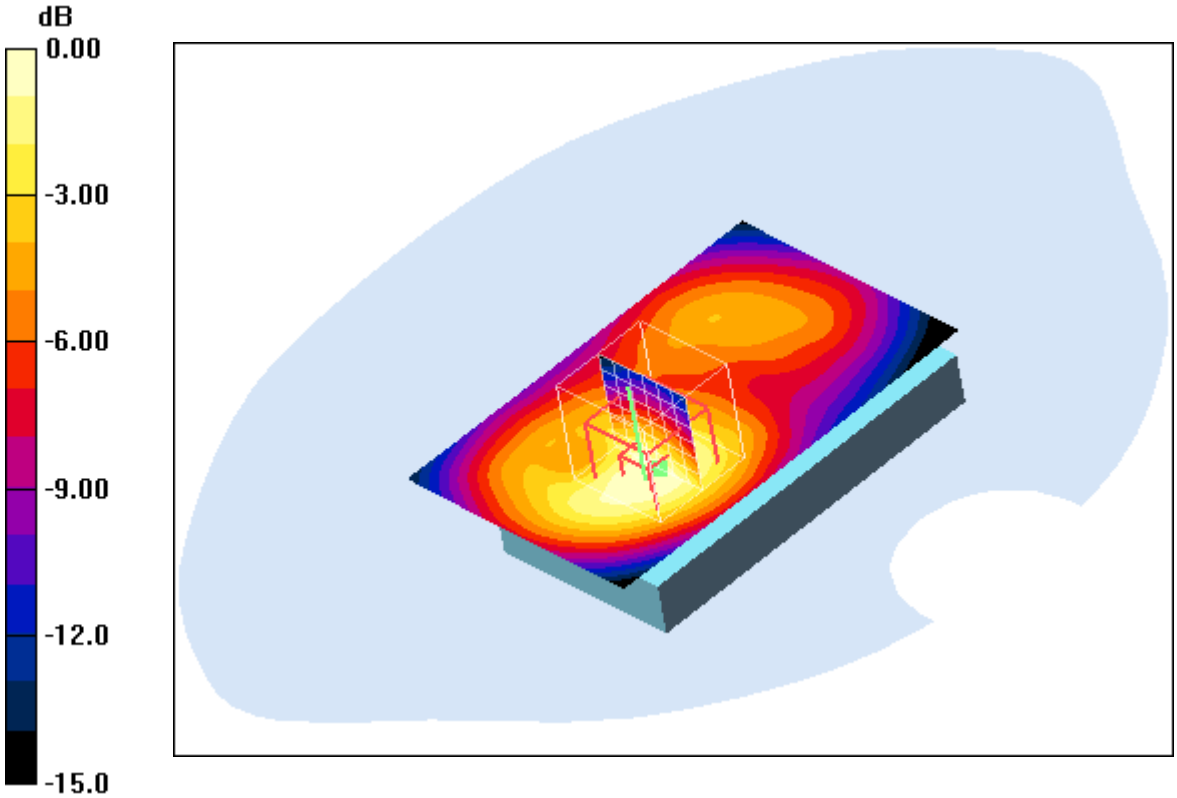

0 dB = 0.952mW/g

Additional information:
position or distance of DUT to SAM: 10 mm
ambient temperature: 23.7°C; liquid temperature: 23.3°C

Date/Time: 04.08.2011 13:34:38Date/Time: 04.08.2011 13:40:01

IEEE1528_OET65-Body-GSM1900 GPRS 4TS

DUT: Sony Ericsson; Type: AAD-3880123-BV; Serial: BX902GJNRZ
Communication System: PCS 1900 GPRS 4TS; Frequency: 1909.8 MHz; Duty Cycle: 1:2
Medium: M1900 Medium parameters used: f = 1909.8 MHz; σ = 1.53 mho/m; ε_r = 52.6; ρ = 1000 kg/m^3
Phantom section: Flat Section
DASY4 Configuration:
- Probe: ET3DV6 - SN1554; ConvF(4.42, 4.42, 4.42); Calibrated: 11.05.2011
- Sensor-Surface: 4mm (Mechanical And Optical Surface Detection)
- Electronics: DAE3 Sn413; Calibrated: 13.01.2011
- Phantom: SAM 12; Type: SAM; Serial: 1043
- Measurement SW: DASY4, V4.5 Build 19; Postprocessing SW: SEMCAD, V1.8 Build 146

Rear position - High/Area Scan (51x81x1): Measurement grid: dx=15mm, dy=15mm

Maximum value of SAR (interpolated) = 0.744 mW/g

Rear position - High/Zoom Scan (7x7x7) (7x7x7)/Cube 0: Measurement grid: dx=5mm, dy=5mm, dz=5mm

Reference Value = 22.9 V/m; Power Drift = -0.108 dB
Peak SAR (extrapolated) = 1.09 W/kg
SAR(1 g) = 0.704 mW/g; SAR(10 g) = 0.415 mW/g
Maximum value of SAR (measured) = 0.768 mW/g

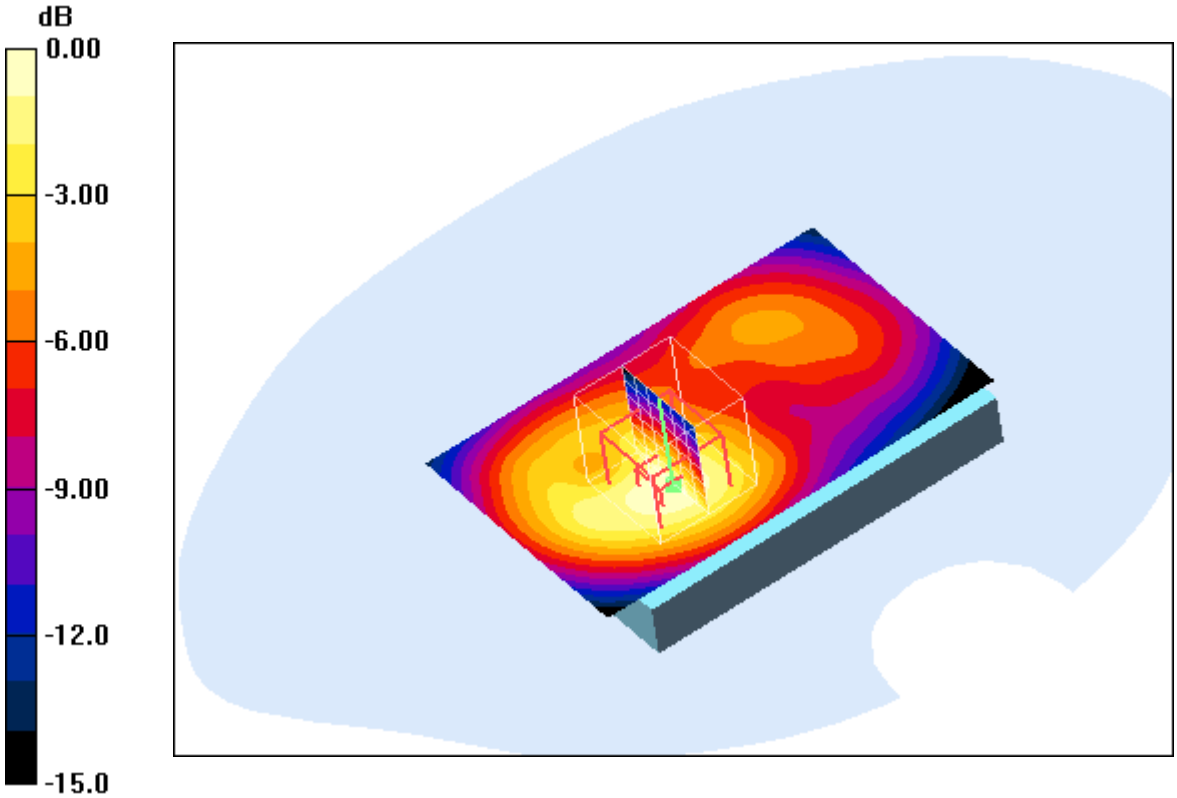

0 dB = 0.768mW/g

Additional information:
position or distance of DUT to SAM: 10 mm
ambient temperature: 23.7°C; liquid temperature: 23.3°C

Date/Time: 04.08.2011 11:42:56Date/Time: 04.08.2011 11:51:05

IEEE1528_OET65-Body-GSM1900 GPRS 4TS

DUT: Sony Ericsson; Type: AAD-3880123-BV; Serial: BX902GJNRZ
Communication System: PCS 1900 GPRS 4TS; Frequency: 1880 MHz; Duty Cycle: 1:2
Medium: M1900 Medium parameters used: f = 1880 MHz; σ = 1.5 mho/m; ε_r = 52.7; ρ = 1000 kg/m^3
Phantom section: Flat Section
DASY4 Configuration:
- Probe: ET3DV6 - SN1554; ConvF(4.42, 4.42, 4.42); Calibrated: 11.05.2011
- Sensor-Surface: 4mm (Mechanical And Optical Surface Detection)
- Electronics: DAE3 Sn413; Calibrated: 13.01.2011
- Phantom: SAM 12; Type: SAM; Serial: 1043
- Measurement SW: DASY4, V4.5 Build 19; Postprocessing SW: SEMCAD, V1.8 Build 146

Edge left position - Middle/Area Scan (51x81x1): Measurement grid: dx=15mm, dy=15mm

Maximum value of SAR (interpolated) = 0.337 mW/g

Edge left position - Middle/Zoom Scan (7x7x7) (7x7x7)/Cube 0: Measurement grid: dx=5mm, dy=5mm, dz=5mm

Reference Value = 13.2 V/m; Power Drift = -0.084 dB
Peak SAR (extrapolated) = 0.443 W/kg
SAR(1 g) = 0.270 mW/g; SAR(10 g) = 0.160 mW/g
Maximum value of SAR (measured) = 0.303 mW/g

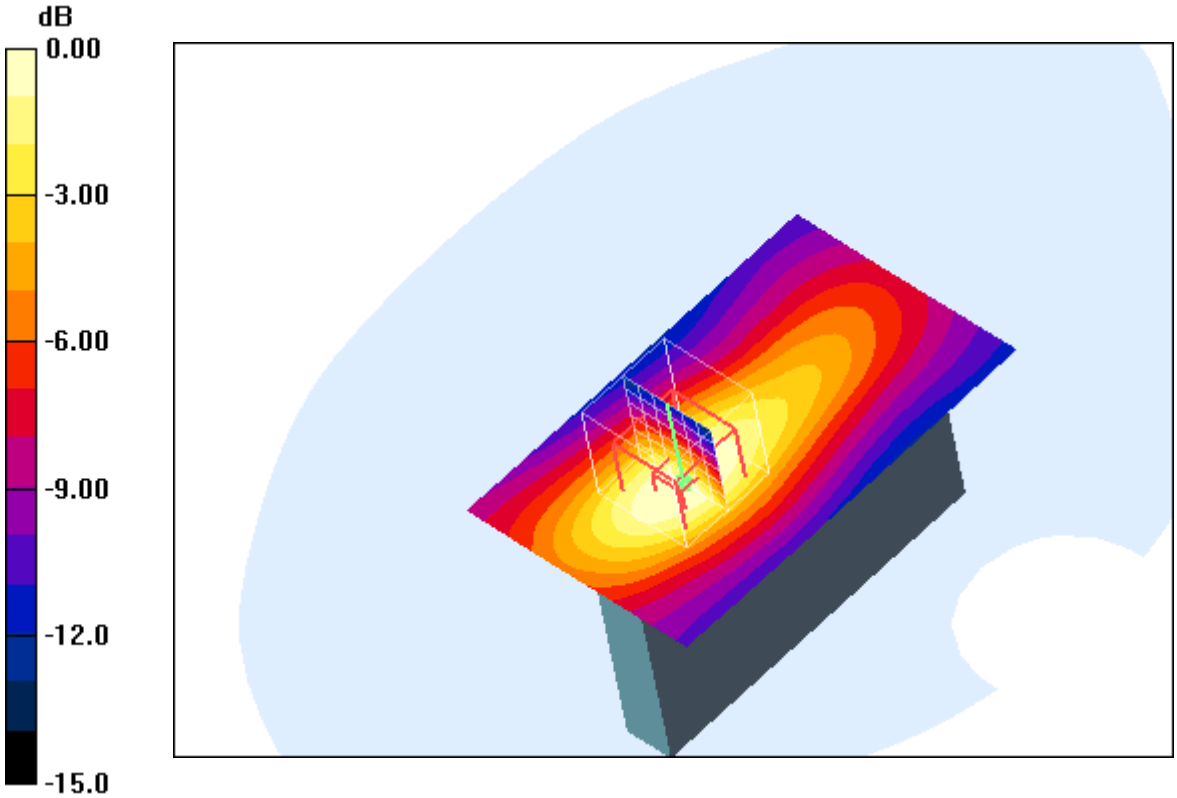

0 dB = 0.303mW/g

Additional information:
position or distance of DUT to SAM: 10 mm
ambient temperature: 23.7°C; liquid temperature: 23.3°C

Date/Time: 04.08.2011 12:09:01Date/Time: 04.08.2011 12:14:38

IEEE1528_OET65-Body-GSM1900 GPRS 4TS

DUT: Sony Ericsson; Type: AAD-3880123-BV; Serial: BX902GJNRZ
Communication System: PCS 1900 GPRS 4TS; Frequency: 1880 MHz; Duty Cycle: 1:2
Medium: M1900 Medium parameters used: f = 1880 MHz; σ = 1.5 mho/m; ε_r = 52.7; ρ = 1000 kg/m^3
Phantom section: Flat Section
DASY4 Configuration:
- Probe: ET3DV6 - SN1554; ConvF(4.42, 4.42, 4.42); Calibrated: 11.05.2011
- Sensor-Surface: 4mm (Mechanical And Optical Surface Detection)
- Electronics: DAE3 Sn413; Calibrated: 13.01.2011
- Phantom: SAM 12; Type: SAM; Serial: 1043
- Measurement SW: DASY4, V4.5 Build 19; Postprocessing SW: SEMCAD, V1.8 Build 146

Edge right position - Middle/Area Scan (51x81x1): Measurement grid: dx=15mm, dy=15mm

Maximum value of SAR (interpolated) = 0.316 mW/g

Edge right position - Middle/Zoom Scan (7x7x7) (7x7x7)/Cube 0: Measurement grid: dx=5mm, dy=5mm, dz=5mm

Reference Value = 15.0 V/m; Power Drift = -0.079 dB
Peak SAR (extrapolated) = 0.424 W/kg
SAR(1 g) = 0.276 mW/g; SAR(10 g) = 0.170 mW/g
Maximum value of SAR (measured) = 0.302 mW/g

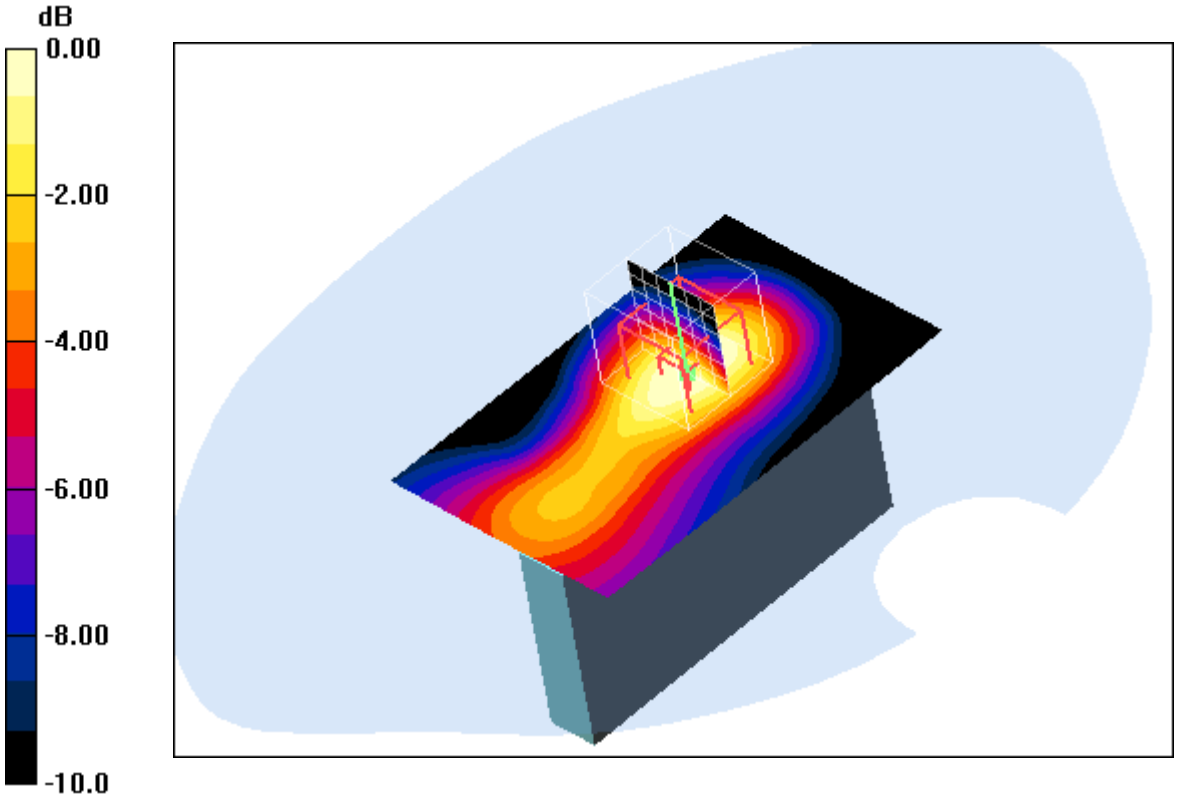

0 dB = 0.302mW/g

Additional information:
position or distance of DUT to SAM: 10 mm
ambient temperature: 23.7°C; liquid temperature: 23.3°C

Date/Time: 04.08.2011 12:32:23Date/Time: 04.08.2011 12:38:41

IEEE1528_OET65-Body-GSM1900 GPRS 4TS

DUT: Sony Ericsson; Type: AAD-3880123-BV; Serial: BX902GJNRZ
Communication System: PCS 1900 GPRS 4TS; Frequency: 1880 MHz; Duty Cycle: 1:2
Medium: M1900 Medium parameters used: f = 1880 MHz; σ = 1.5 mho/m; ε_r = 52.7; ρ = 1000 kg/m^3
Phantom section: Flat Section
DASY4 Configuration:
- Probe: ET3DV6 - SN1554; ConvF(4.42, 4.42, 4.42); Calibrated: 11.05.2011
- Sensor-Surface: 4mm (Mechanical And Optical Surface Detection)
- Electronics: DAE3 Sn413; Calibrated: 13.01.2011
- Phantom: SAM 12; Type: SAM; Serial: 1043
- Measurement SW: DASY4, V4.5 Build 19; Postprocessing SW: SEMCAD, V1.8 Build 146

Edge bottom position - Middle/Area Scan (61x61x1): Measurement grid: dx=15mm, dy=15mm

Maximum value of SAR (interpolated) = 0.450 mW/g

Edge bottom position - Middle/Zoom Scan (7x7x7) (7x7x7)/Cube 0:

Measurement grid: dx=5mm, dy=5mm, dz=5mm
Reference Value = 18.5 V/m; Power Drift = -0.030 dB
Peak SAR (extrapolated) = 0.632 W/kg
SAR(1 g) = 0.414 mW/g; SAR(10 g) = 0.252 mW/g
Maximum value of SAR (measured) = 0.447 mW/g

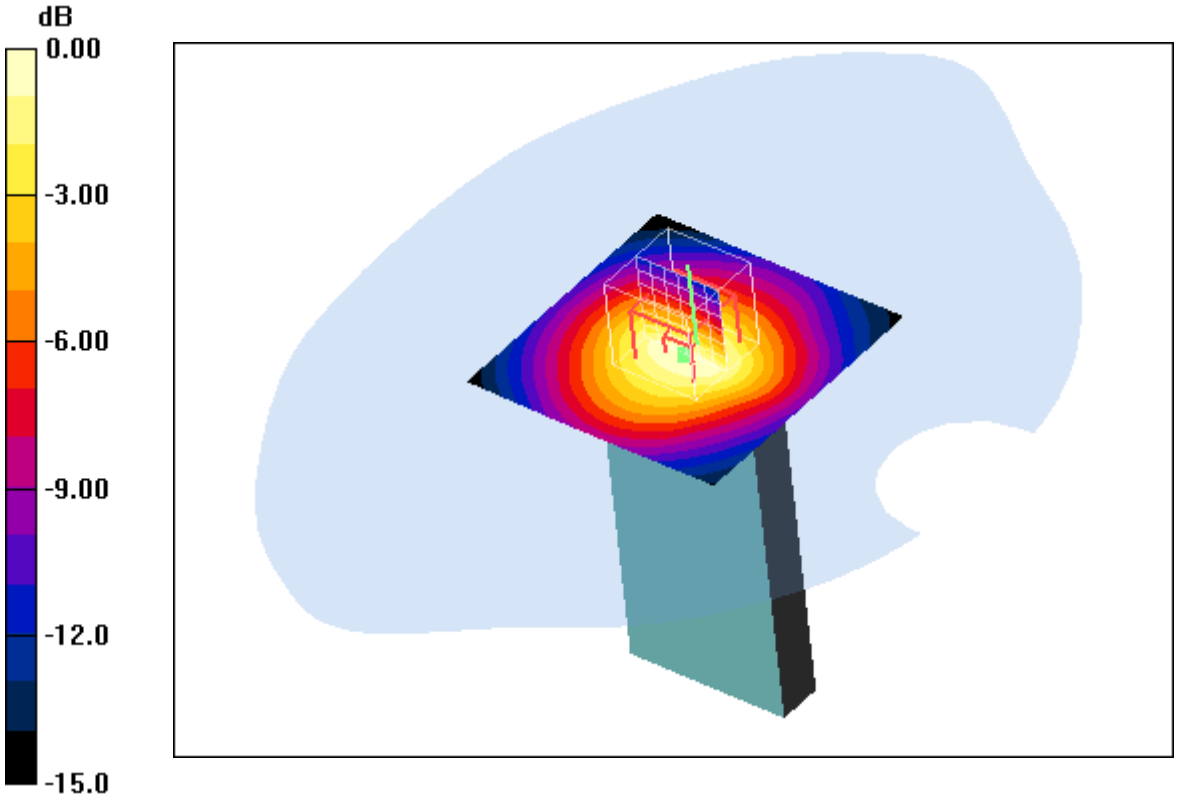

0 dB = 0.447mW/g

Additional information:
position or distance of DUT to SAM: 10 mm
ambient temperature: 23.7°C; liquid temperature: 23.3°C

Date/Time: 04.08.2011 13:59:30Date/Time: 04.08.2011 14:06:09

IEEE1528_OET65-Body-GSM1900 1TS

DUT: Sony Ericsson; Type: AAD-3880123-BV; Serial: BX902GJNRZ
Communication System: GSM 1900; Frequency: 1850.2 MHz; Duty Cycle: 1:8
Medium: M1900 Medium parameters used: f = 1850.2 MHz; σ = 1.47 mho/m; ε_r = 52.8; ρ = 1000 kg/m^3
Phantom section: Flat Section
DASY4 Configuration:
- Probe: ET3DV6 - SN1554; ConvF(4.42, 4.42, 4.42); Calibrated: 11.05.2011
- Sensor-Surface: 4mm (Mechanical And Optical Surface Detection)
- Electronics: DAE3 Sn413; Calibrated: 13.01.2011
- Phantom: SAM 12; Type: SAM; Serial: 1043
- Measurement SW: DASY4, V4.5 Build 19; Postprocessing SW: SEMCAD, V1.8 Build 146

Rear position - Low/Area Scan (51x81x1): Measurement grid: dx=15mm, dy=15mm

Maximum value of SAR (interpolated) = 0.400 mW/g

Rear position - Low/Zoom Scan (7x7x7) (7x7x7)/Cube 0: Measurement grid: dx=5mm, dy=5mm, dz=5mm

Reference Value = 16.3 V/m; Power Drift = 0.160 dB
Peak SAR (extrapolated) = 0.554 W/kg
SAR(1 g) = 0.369 mW/g; SAR(10 g) = 0.226 mW/g
Maximum value of SAR (measured) = 0.402 mW/g

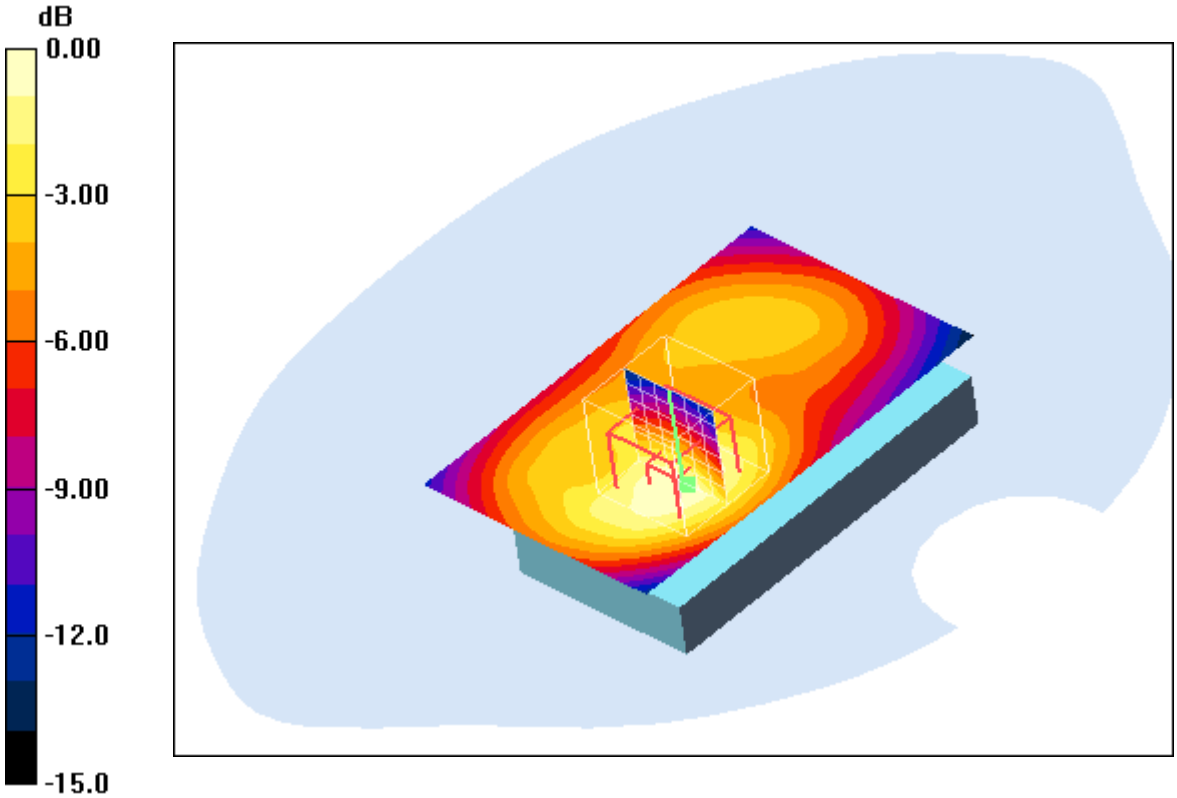

0 dB = 0.402mW/g

Additional information:
position or distance of DUT to SAM: 15 mm
ambient temperature: 23.7°C; liquid temperature: 23.3°C

Annex B.5: WLAN 2450MHz head

Date/Time: 16.08.2011 10:01:36Date/Time: 16.08.2011 10:08:33

IEEE1528_OET65-LeftHandSide_WLAN

DUT: Sony Ericsson; Type: AAD-3880123-BV; Serial: BX902GJNT2
Communication System: WLAN 2450 US; Frequency: 2412 MHz; Duty Cycle: 1:1
Medium: HSL2450 Medium parameters used: f = 2412 MHz; σ = 1.81 mho/m; ε_r = 39.3; ρ = 1000 kg/m^3
Phantom section: Left Section
DASY4 Configuration:
- Probe: ET3DV6 - SN1559; ConvF(4.38, 4.38, 4.38); Calibrated: 19.01.2011
- Sensor-Surface: 4mm (Mechanical And Optical Surface Detection)
- Electronics: DAE3 Sn477; Calibrated: 04.05.2011
- Phantom: SAM left; Type: SAM; Serial: 1041
- Measurement SW: DASY4, V4.7 Build 71; Postprocessing SW: SEMCAD, V1.8 Build 146

Touch position - Low/Area Scan (51x81x1): Measurement grid: dx=15mm, dy=15mm

Maximum value of SAR (interpolated) = 0.633 mW/g

Touch position - Low/Zoom Scan (7x7x7) (7x7x7)/Cube 0: Measurement grid: dx=5mm, dy=5mm, dz=5mm

Reference Value = 19.3 V/m; Power Drift = -0.141 dB
Peak SAR (extrapolated) = 1.12 W/kg
SAR(1 g) = 0.542 mW/g; SAR(10 g) = 0.265 mW/g
Maximum value of SAR (measured) = 0.609 mW/g

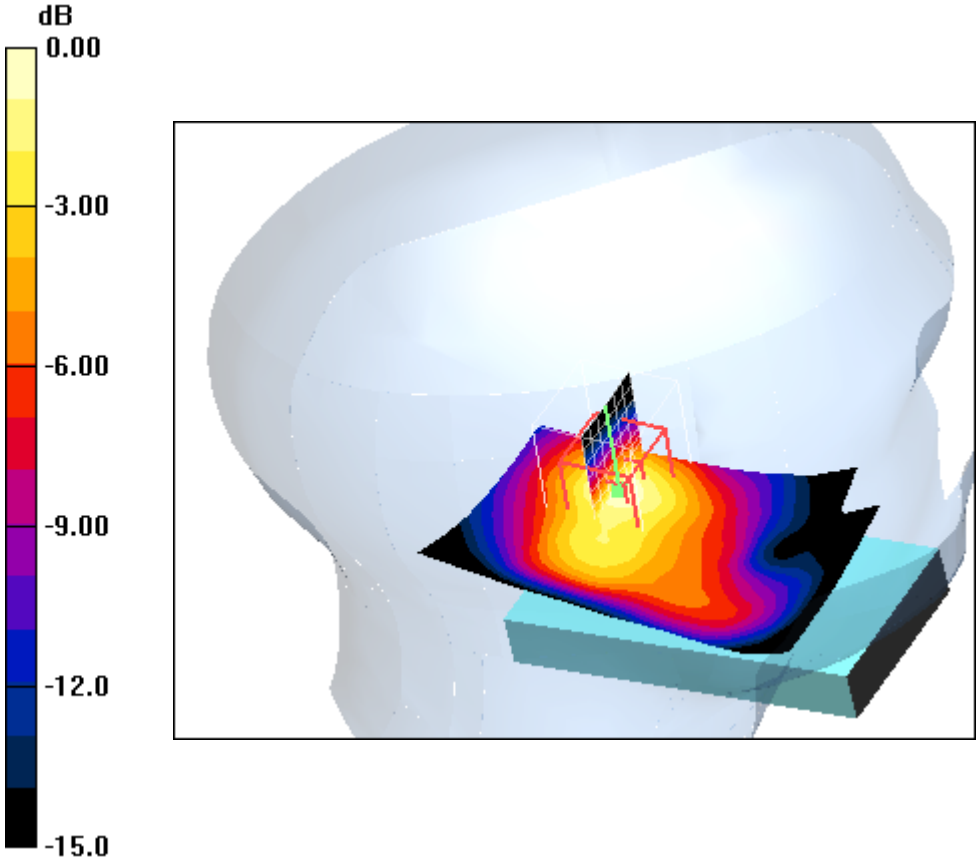

0 dB = 0.609mW/g

Additional information:
ambient temperature: 22.3°C; liquid temperature: 21.9°C

Date/Time: 16.08.2011 13:40:53Date/Time: 16.08.2011 13:49:46

IEEE1528_OET65-LeftHandSide_WLAN

DUT: Sony Ericsson; Type: AAD-3880123-BV; Serial: BX902GJNT2
Communication System: WLAN 2450 US; Frequency: 2437 MHz; Duty Cycle: 1:1
Medium: HSL2450 Medium parameters used (interpolated): f = 2437 MHz; σ = 1.84 mho/m; ε_r = 39.3; ρ = 1000 kg/m^3
Phantom section: Left Section
DASY4 Configuration:
- Probe: ET3DV6 - SN1559; ConvF(4.38, 4.38, 4.38); Calibrated: 19.01.2011
- Sensor-Surface: 4mm (Mechanical And Optical Surface Detection)
- Electronics: DAE3 Sn477; Calibrated: 04.05.2011
- Phantom: SAM left; Type: SAM; Serial: 1041
- Measurement SW: DASY4, V4.7 Build 71; Postprocessing SW: SEMCAD, V1.8 Build 146

Touch position - Middle/Area Scan (51x81x1): Measurement grid: dx=15mm, dy=15mm

Maximum value of SAR (interpolated) = 0.333 mW/g

Touch position - Middle/Zoom Scan (7x7x7) (9x7x7)/Cube 0: Measurement grid: dx=5mm, dy=5mm, dz=5mm

Reference Value = 14.0 V/m; Power Drift = -0.115 dB
Peak SAR (extrapolated) = 0.636 W/kg
SAR(1 g) = 0.297 mW/g; SAR(10 g) = 0.147 mW/g
Maximum value of SAR (measured) = 0.327 mW/g

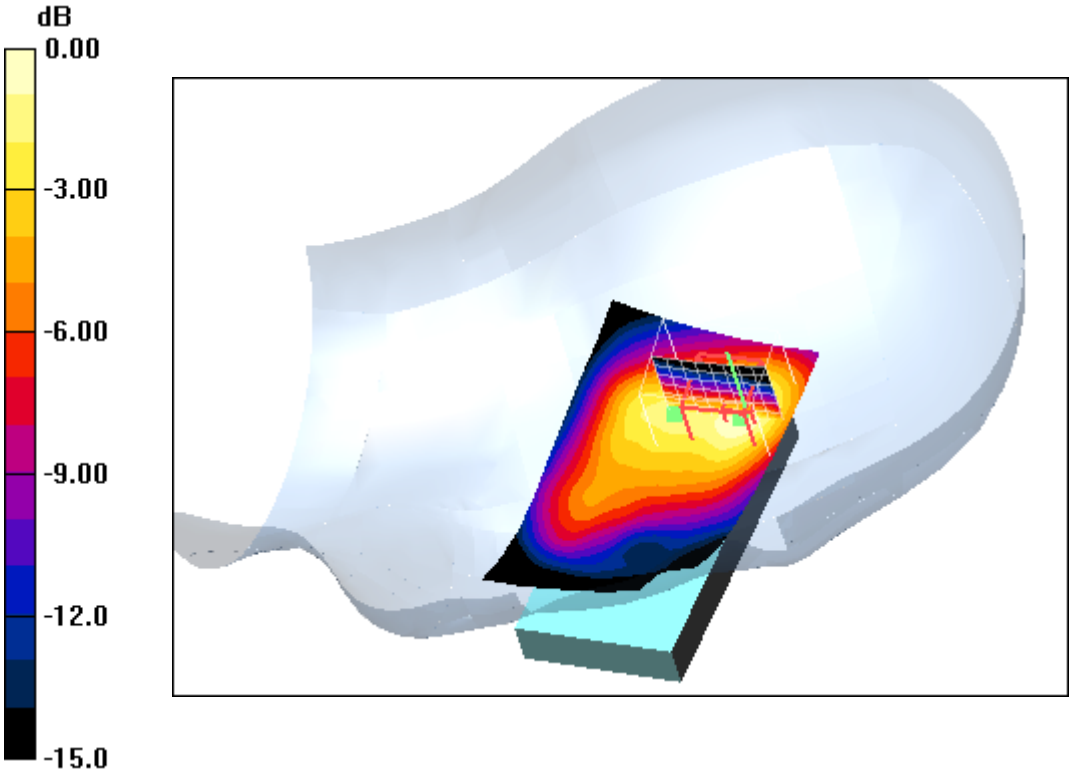

0 dB = 0.327mW/g

Additional information:
ambient temperature: 22.3°C; liquid temperature: 21.9°C

Date/Time: 16.08.2011 14:12:51Date/Time: 16.08.2011 14:22:45

IEEE1528_OET65-LeftHandSide_WLAN

DUT: Sony Ericsson; Type: AAD-3880123-BV; Serial: BX902GJNT2
Communication System: WLAN 2450 US; Frequency: 2462 MHz; Duty Cycle: 1:1
Medium: HSL2450 Medium parameters used: f = 2462 MHz; σ = 1.86 mho/m; ε_r = 39.2; ρ = 1000 kg/m^3
Phantom section: Left Section
DASY4 Configuration:
- Probe: ET3DV6 - SN1559; ConvF(4.38, 4.38, 4.38); Calibrated: 19.01.2011
- Sensor-Surface: 4mm (Mechanical And Optical Surface Detection)
- Electronics: DAE3 Sn477; Calibrated: 04.05.2011
- Phantom: SAM left; Type: SAM; Serial: 1041
- Measurement SW: DASY4, V4.7 Build 71; Postprocessing SW: SEMCAD, V1.8 Build 146

Touch position - High/Area Scan (51x81x1): Measurement grid: dx=15mm, dy=15mm
Maximum value of SAR (interpolated) = 0.208 mW/g

Touch position - High/Zoom Scan (7x7x7) (9x7x7)/Cube 0: Measurement grid: dx=5mm, dy=5mm, dz=5mm
Reference Value = 11.0 V/m; Power Drift = -0.122 dB
Peak SAR (extrapolated) = 0.398 W/kg
SAR(1 g) = 0.187 mW/g; SAR(10 g) = 0.091 mW/g
Maximum value of SAR (measured) = 0.204 mW/g

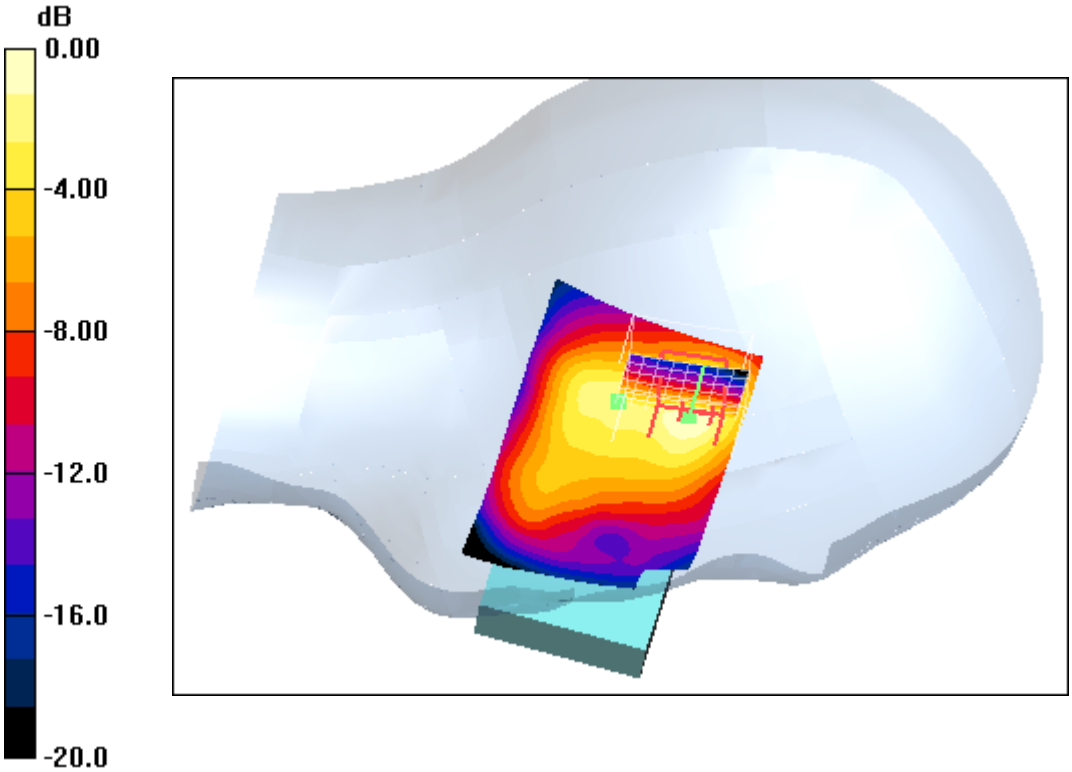

0 dB = 0.204mW/g

Additional information:
ambient temperature: 22.3°C; liquid temperature: 21.9°C

Date/Time: 16.08.2011 10:26:19Date/Time: 16.08.2011 10:33:08Date/Time: 16.08.2011 10:46:02

IEEE1528_OET65-LeftHandSide_WLAN

DUT: Sony Ericsson; Type: AAD-3880123-BV; Serial: BX902GJNT2
Communication System: WLAN 2450 US; Frequency: 2412 MHz; Duty Cycle: 1:1
Medium: HSL2450 Medium parameters used: f = 2412 MHz; σ = 1.81 mho/m; ε_r = 39.3; ρ = 1000 kg/m^3
Phantom section: Left Section
DASY4 Configuration:
- Probe: ET3DV6 - SN1559; ConvF(4.38, 4.38, 4.38); Calibrated: 19.01.2011
- Sensor-Surface: 4mm (Mechanical And Optical Surface Detection)
- Electronics: DAE3 Sn477; Calibrated: 04.05.2011
- Phantom: SAM left; Type: SAM; Serial: 1041
- Measurement SW: DASY4, V4.7 Build 71; Postprocessing SW: SEMCAD, V1.8 Build 146

Tilt position - Low/Area Scan (51x81x1): Measurement grid: dx=15mm, dy=15mm
Maximum value of SAR (interpolated) = 0.465 mW/g

Tilt position - Low/Zoom Scan (7x7x7) (7x7x7)/Cube 0: Measurement grid: dx=5mm, dy=5mm, dz=5mm
Reference Value = 16.1 V/m; Power Drift = 0.082 dB
Peak SAR (extrapolated) = 0.877 W/kg
SAR(1 g) = 0.401 mW/g; SAR(10 g) = 0.195 mW/g
Maximum value of SAR (measured) = 0.447 mW/g

Tilt position - Low/Zoom Scan (7x7x7) (7x7x7)/Cube 1: Measurement grid: dx=5mm, dy=5mm, dz=5mm
Reference Value = 16.1 V/m; Power Drift = 0.082 dB
Peak SAR (extrapolated) = 0.617 W/kg
SAR(1 g) = 0.377 mW/g; SAR(10 g) = 0.212 mW/g
Maximum value of SAR (measured) = 0.419 mW/g

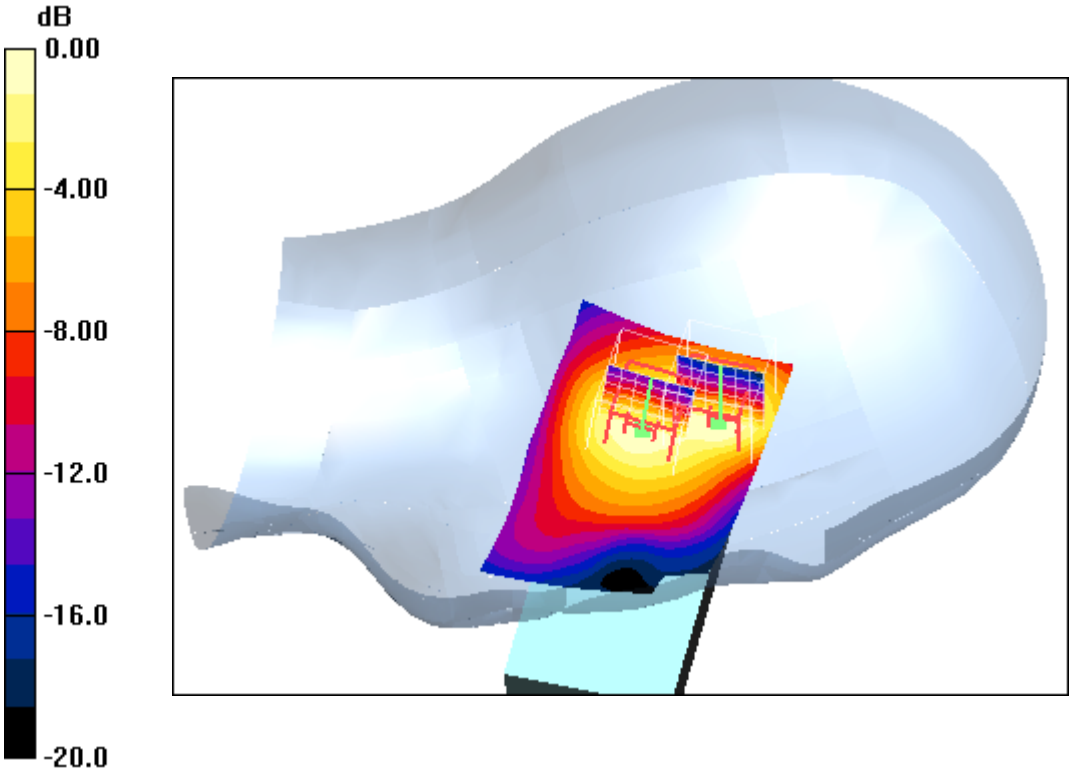

0 dB = 0.419mW/g

Additional information:
ambient temperature: 22.3°C; liquid temperature: 21.9°C

Date/Time: 16.08.2011 13:05:09Date/Time: 16.08.2011 13:13:57

IEEE1528_OET65-LeftHandSide_WLAN

DUT: Sony Ericsson; Type: AAD-3880123-BV; Serial: BX902GJNT2
Communication System: WLAN 2450 US; Frequency: 2437 MHz; Duty Cycle: 1:1
Medium: HSL2450 Medium parameters used (interpolated): f = 2437 MHz; σ = 1.84 mho/m; ε_r = 39.3; ρ = 1000 kg/m^3
Phantom section: Left Section
DASY4 Configuration:
- Probe: ET3DV6 - SN1559; ConvF(4.38, 4.38, 4.38); Calibrated: 19.01.2011
- Sensor-Surface: 4mm (Mechanical And Optical Surface Detection)
- Electronics: DAE3 Sn477; Calibrated: 04.05.2011
- Phantom: SAM left; Type: SAM; Serial: 1041
- Measurement SW: DASY4, V4.7 Build 71; Postprocessing SW: SEMCAD, V1.8 Build 146

Tilt position - Middle/Area Scan (51x81x1): Measurement grid: dx=15mm, dy=15mm
Maximum value of SAR (interpolated) = 0.284 mW/g

Tilt position - Middle/Zoom Scan (7x7x7) (7x11x7)/Cube 0: Measurement grid: dx=5mm, dy=5mm, dz=5mm
Reference Value = 12.3 V/m; Power Drift = -0.108 dB
Peak SAR (extrapolated) = 0.560 W/kg
SAR(1 g) = 0.253 mW/g; SAR(10 g) = 0.130 mW/g
Maximum value of SAR (measured) = 0.281 mW/g

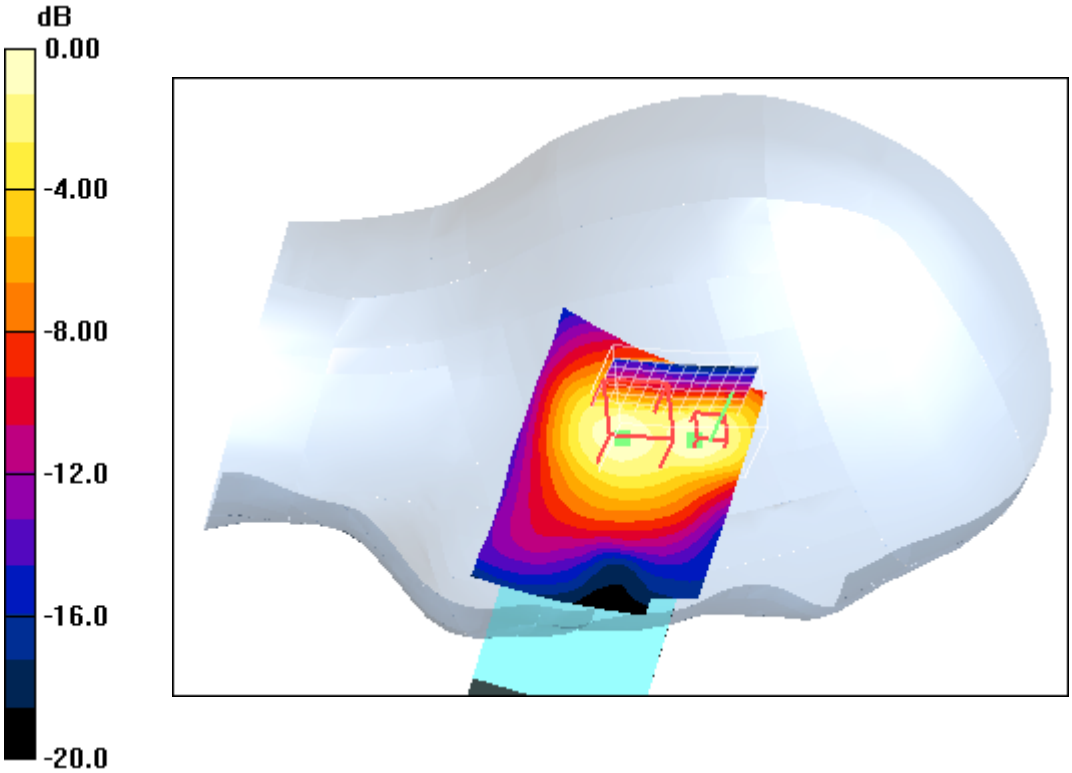

0 dB = 0.281mW/g

Additional information:
ambient temperature: 22.3°C; liquid temperature: 21.9°C

Date/Time: 16.08.2011 14:42:22Date/Time: 16.08.2011 14:52:28

IEEE1528_OET65-LeftHandSide_WLAN

DUT: Sony Ericsson; Type: AAD-3880123-BV; Serial: BX902GJNT2
Communication System: WLAN 2450 US; Frequency: 2462 MHz; Duty Cycle: 1:1
Medium: HSL2450 Medium parameters used: f = 2462 MHz; σ = 1.86 mho/m; ε_r = 39.2; ρ = 1000 kg/m^3
Phantom section: Left Section
DASY4 Configuration:
- Probe: ET3DV6 - SN1559; ConvF(4.38, 4.38, 4.38); Calibrated: 19.01.2011
- Sensor-Surface: 4mm (Mechanical And Optical Surface Detection)
- Electronics: DAE3 Sn477; Calibrated: 04.05.2011
- Phantom: SAM left; Type: SAM; Serial: 1041
- Measurement SW: DASY4, V4.7 Build 71; Postprocessing SW: SEMCAD, V1.8 Build 146

Tilt position - High/Area Scan (51x81x1): Measurement grid: dx=15mm, dy=15mm
Maximum value of SAR (interpolated) = 0.166 mW/g

Tilt position - High/Zoom Scan (7x7x7) (9x7x7)/Cube 0: Measurement grid: dx=5mm, dy=5mm, dz=5mm
Reference Value = 9.17 V/m; Power Drift = -0.031 dB
Peak SAR (extrapolated) = 0.326 W/kg
SAR(1 g) = 0.148 mW/g; SAR(10 g) = 0.074 mW/g
Maximum value of SAR (measured) = 0.167 mW/g

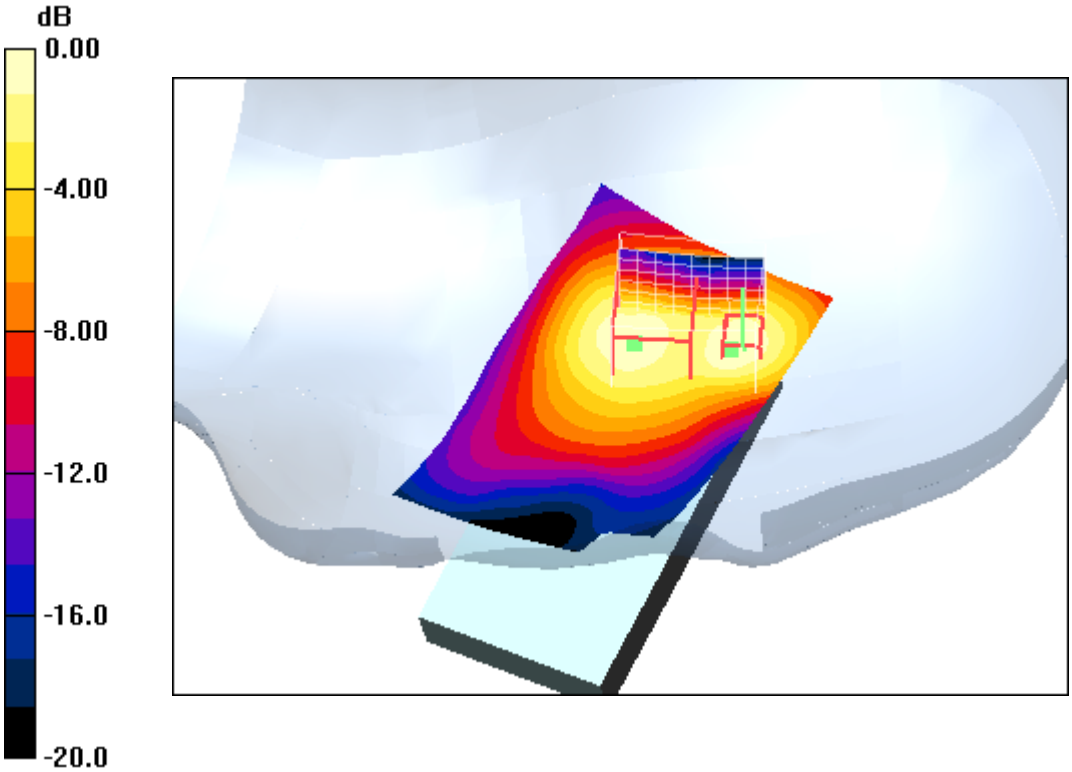

0 dB = 0.167mW/g

Additional information:
ambient temperature: 22.3°C; liquid temperature: 21.9°C

Date/Time: 16.08.2011 11:33:24Date/Time: 16.08.2011 11:41:21

IEEE1528_OET65-RightHandSide_WLAN

DUT: Sony Ericsson; Type: AAD-3880123-BV; Serial: BX902GJNT2
Communication System: WLAN 2450 US; Frequency: 2412 MHz; Duty Cycle: 1:1
Medium: HSL2450 Medium parameters used: f = 2412 MHz; σ = 1.81 mho/m; ε_r = 39.3; ρ = 1000 kg/m^3
Phantom section: Right Section
DASY4 Configuration:
- Probe: ET3DV6 - SN1559; ConvF(4.38, 4.38, 4.38); Calibrated: 19.01.2011
- Sensor-Surface: 4mm (Mechanical And Optical Surface Detection)
- Electronics: DAE3 Sn477; Calibrated: 04.05.2011
- Phantom: SAM left; Type: SAM; Serial: 1041
- Measurement SW: DASY4, V4.7 Build 71; Postprocessing SW: SEMCAD, V1.8 Build 146

Touch position - Low/Area Scan (51x81x1): Measurement grid: dx=15mm, dy=15mm
Maximum value of SAR (interpolated) = 0.536 mW/g

Touch position - Low/Zoom Scan (7x7x7) (7x7x7)/Cube 0: Measurement grid: dx=5mm, dy=5mm, dz=5mm
Reference Value = 17.0 V/m; Power Drift = 0.146 dB
Peak SAR (extrapolated) = 0.784 W/kg
SAR(1 g) = 0.487 mW/g; SAR(10 g) = 0.271 mW/g
Maximum value of SAR (measured) = 0.536 mW/g

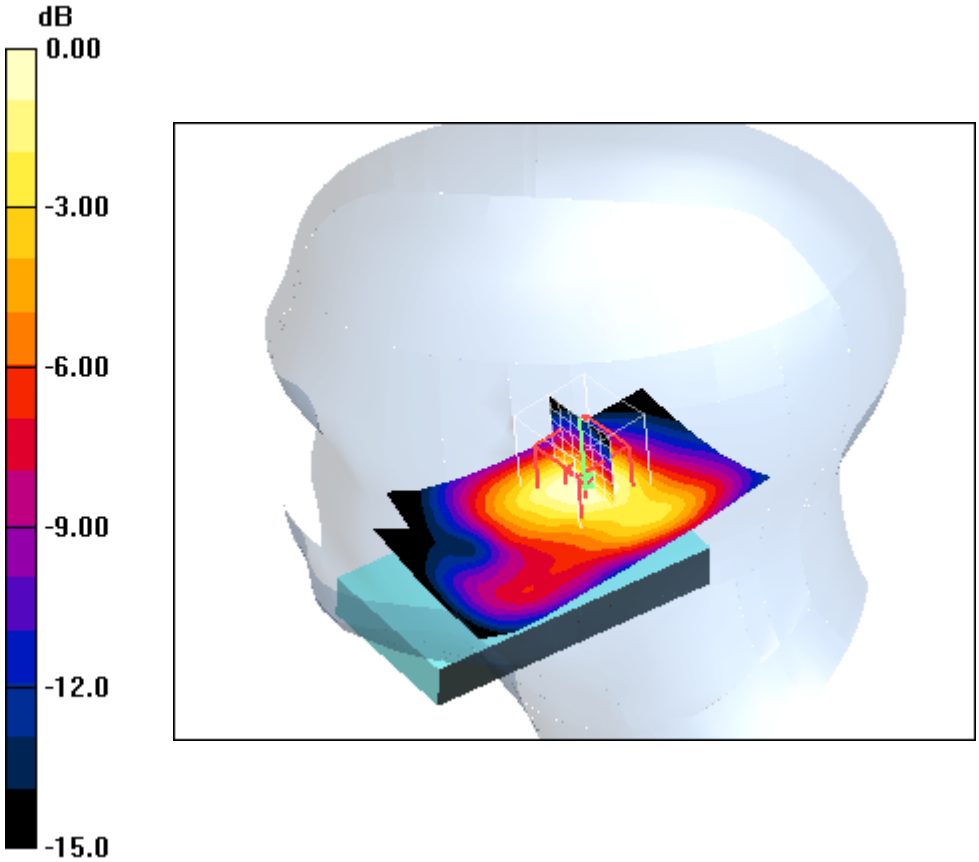

0 dB = 0.536mW/g

Additional information:
ambient temperature: 22.3°C; liquid temperature: 21.9°C

Date/Time: 16.08.2011 12:02:00Date/Time: 16.08.2011 12:10:06

IEEE1528_OET65-RightHandSide_WLAN

DUT: Sony Ericsson; Type: AAD-3880123-BV; Serial: BX902GJNT2
Communication System: WLAN 2450 US; Frequency: 2437 MHz; Duty Cycle: 1:1
Medium: HSL2450 Medium parameters used (interpolated): f = 2437 MHz; σ = 1.84 mho/m; ε_r = 39.3; ρ = 1000 kg/m^3
Phantom section: Right Section
DASY4 Configuration:
- Probe: ET3DV6 - SN1559; ConvF(4.38, 4.38, 4.38); Calibrated: 19.01.2011
- Sensor-Surface: 4mm (Mechanical And Optical Surface Detection)
- Electronics: DAE3 Sn477; Calibrated: 04.05.2011
- Phantom: SAM left; Type: SAM; Serial: 1041
- Measurement SW: DASY4, V4.7 Build 71; Postprocessing SW: SEMCAD, V1.8 Build 146

Touch position - Middle/Area Scan (51x81x1): Measurement grid: dx=15mm, dy=15mm
Maximum value of SAR (interpolated) = 0.351 mW/g

Touch position - Middle/Zoom Scan (7x7x7) (7x7x7)/Cube 0: Measurement grid: dx=5mm, dy=5mm, dz=5mm
Reference Value = 13.3 V/m; Power Drift = 0.106 dB
Peak SAR (extrapolated) = 0.509 W/kg
SAR(1 g) = 0.310 mW/g; SAR(10 g) = 0.169 mW/g
Maximum value of SAR (measured) = 0.346 mW/g

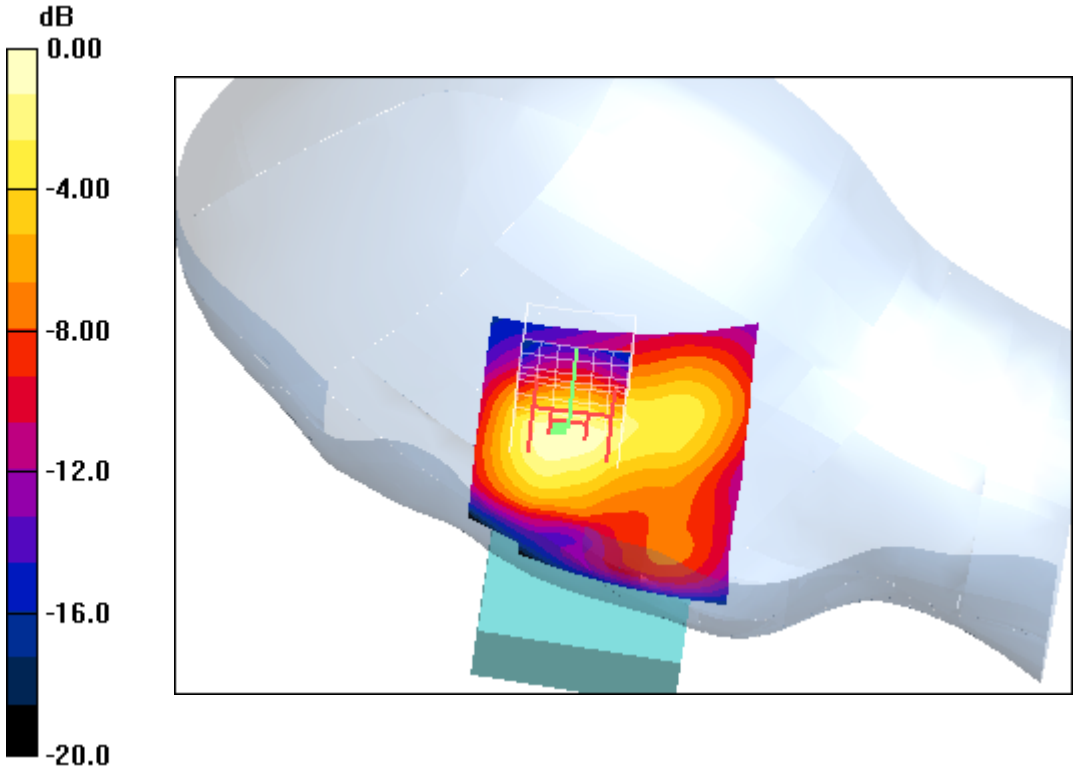

0 dB = 0.346mW/g

Additional information:
ambient temperature: 22.3°C; liquid temperature: 21.9°C

Date/Time: 16.08.2011 15:34:44Date/Time: 16.08.2011 15:44:47

IEEE1528_OET65-RightHandSide_WLAN

DUT: Sony Ericsson; Type: AAD-3880123-BV; Serial: BX902GJNT2
Communication System: WLAN 2450 US; Frequency: 2462 MHz; Duty Cycle: 1:1
Medium: HSL2450 Medium parameters used: f = 2462 MHz; σ = 1.86 mho/m; ε_r = 39.2; ρ = 1000 kg/m^3
Phantom section: Right Section
DASY4 Configuration:
- Probe: ET3DV6 - SN1559; ConvF(4.38, 4.38, 4.38); Calibrated: 19.01.2011
- Sensor-Surface: 4mm (Mechanical And Optical Surface Detection)
- Electronics: DAE3 Sn477; Calibrated: 04.05.2011
- Phantom: SAM left; Type: SAM; Serial: 1041
- Measurement SW: DASY4, V4.7 Build 71; Postprocessing SW: SEMCAD, V1.8 Build 146

Touch position - High/Area Scan (51x81x1): Measurement grid: dx=15mm, dy=15mm
Maximum value of SAR (interpolated) = 0.191 mW/g

Touch position - High/Zoom Scan (7x7x7) (7x7x7)/Cube 0: Measurement grid: dx=5mm, dy=5mm, dz=5mm
Reference Value = 10.0 V/m; Power Drift = 0.180 dB
Peak SAR (extrapolated) = 0.281 W/kg
SAR(1 g) = 0.174 mW/g; SAR(10 g) = 0.095 mW/g
Maximum value of SAR (measured) = 0.192 mW/g

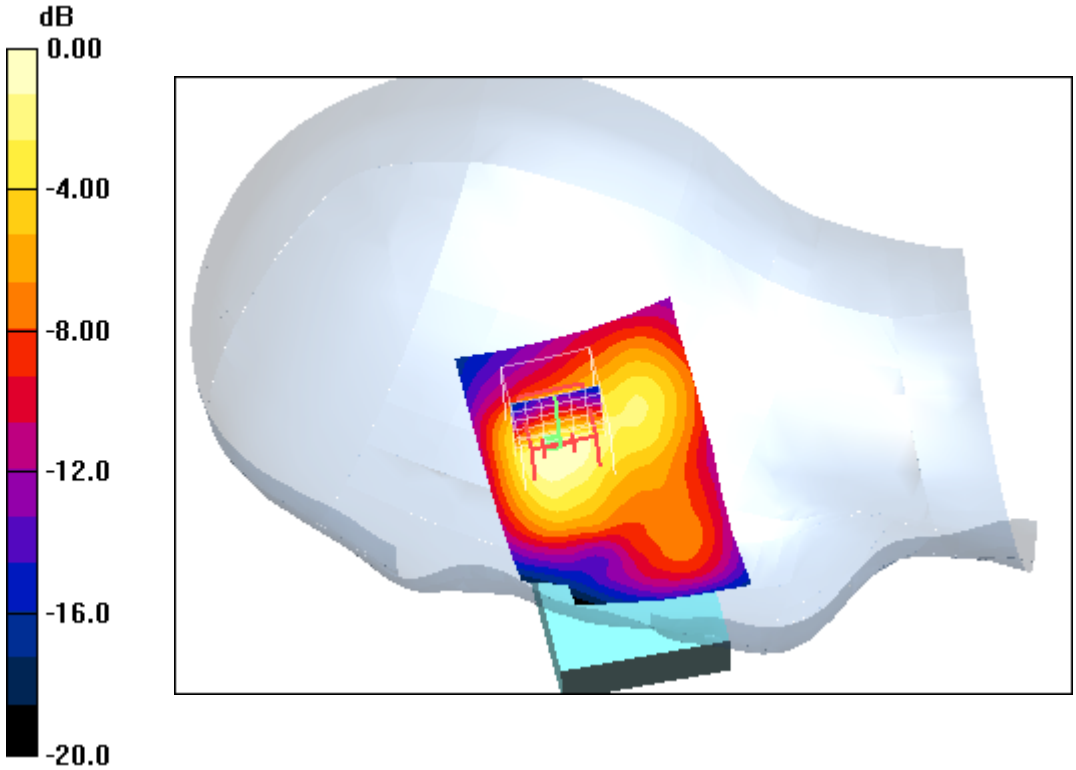

0 dB = 0.192mW/g

Additional information:
ambient temperature: 22.3°C; liquid temperature: 21.9°C

Date/Time: 16.08.2011 11:11:23Date/Time: 16.08.2011 11:18:30

IEEE1528_OET65-RightHandSide_WLAN

DUT: Sony Ericsson; Type: AAD-3880123-BV; Serial: BX902GJNT2
Communication System: WLAN 2450 US; Frequency: 2412 MHz; Duty Cycle: 1:1
Medium: HSL2450 Medium parameters used: f = 2412 MHz; σ = 1.81 mho/m; ε_r = 39.3; ρ = 1000 kg/m^3
Phantom section: Right Section
DASY4 Configuration:
- Probe: ET3DV6 - SN1559; ConvF(4.38, 4.38, 4.38); Calibrated: 19.01.2011
- Sensor-Surface: 4mm (Mechanical And Optical Surface Detection)
- Electronics: DAE3 Sn477; Calibrated: 04.05.2011
- Phantom: SAM left; Type: SAM; Serial: 1041
- Measurement SW: DASY4, V4.7 Build 71; Postprocessing SW: SEMCAD, V1.8 Build 146

Tilt position - Low/Area Scan (51x81x1): Measurement grid: dx=15mm, dy=15mm
Maximum value of SAR (interpolated) = 0.511 mW/g

Tilt position - Low/Zoom Scan (7x7x7) (7x7x7)/Cube 0: Measurement grid: dx=5mm, dy=5mm, dz=5mm
Reference Value = 17.2 V/m; Power Drift = -0.092 dB
Peak SAR (extrapolated) = 0.740 W/kg
SAR(1 g) = 0.450 mW/g; SAR(10 g) = 0.243 mW/g
Maximum value of SAR (measured) = 0.504 mW/g

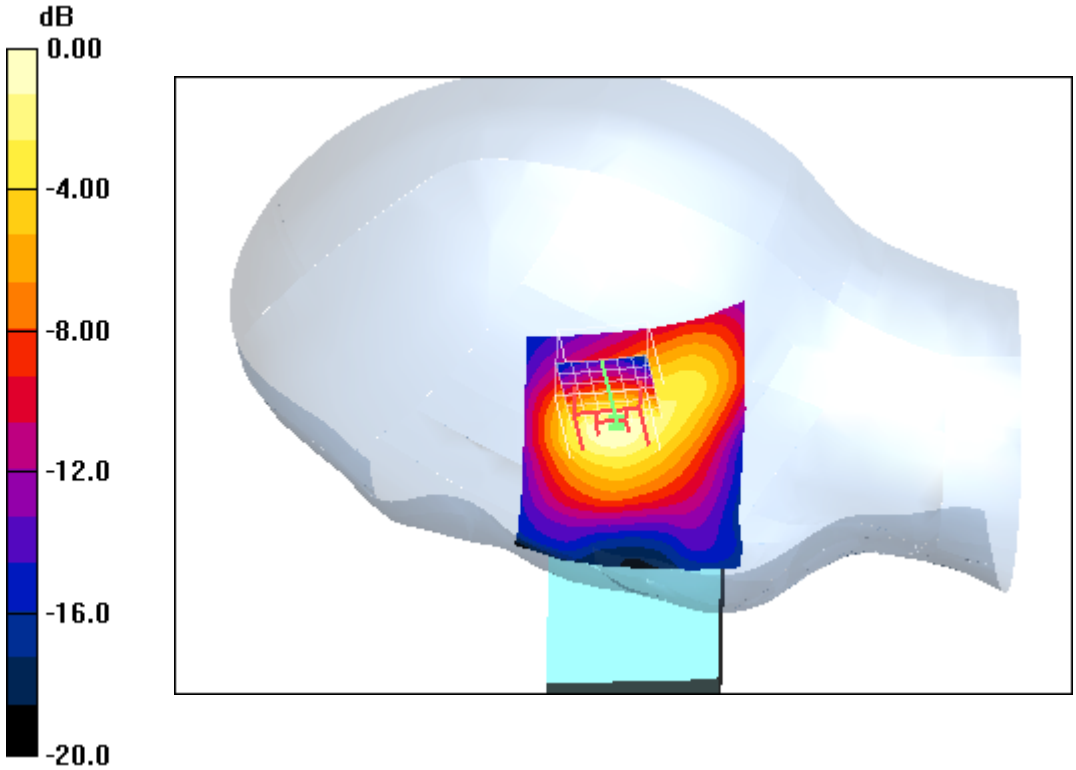

0 dB = 0.504mW/g

Additional information:
ambient temperature: 22.3°C; liquid temperature: 21.9°C

Date/Time: 16.08.2011 12:33:53Date/Time: 16.08.2011 12:40:48

IEEE1528_OET65-RightHandSide_WLAN

DUT: Sony Ericsson; Type: AAD-3880123-BV; Serial: BX902GJNT2
Communication System: WLAN 2450 US; Frequency: 2437 MHz; Duty Cycle: 1:1
Medium: HSL2450 Medium parameters used (interpolated): f = 2437 MHz; σ = 1.84 mho/m; ε_r = 39.3; ρ = 1000 kg/m^3
Phantom section: Right Section
DASY4 Configuration:
- Probe: ET3DV6 - SN1559; ConvF(4.38, 4.38, 4.38); Calibrated: 19.01.2011
- Sensor-Surface: 4mm (Mechanical And Optical Surface Detection)
- Electronics: DAE3 Sn477; Calibrated: 04.05.2011
- Phantom: SAM left; Type: SAM; Serial: 1041
- Measurement SW: DASY4, V4.7 Build 71; Postprocessing SW: SEMCAD, V1.8 Build 146

Tilt position - Middle/Area Scan (51x81x1): Measurement grid: dx=15mm, dy=15mm
Maximum value of SAR (interpolated) = 0.306 mW/g

Tilt position - Middle/Zoom Scan (7x7x7) (7x7x7)/Cube 0: Measurement grid: dx=5mm, dy=5mm, dz=5mm
Reference Value = 13.3 V/m; Power Drift = -0.041 dB
Peak SAR (extrapolated) = 0.446 W/kg
SAR(1 g) = 0.271 mW/g; SAR(10 g) = 0.146 mW/g
Maximum value of SAR (measured) = 0.300 mW/g

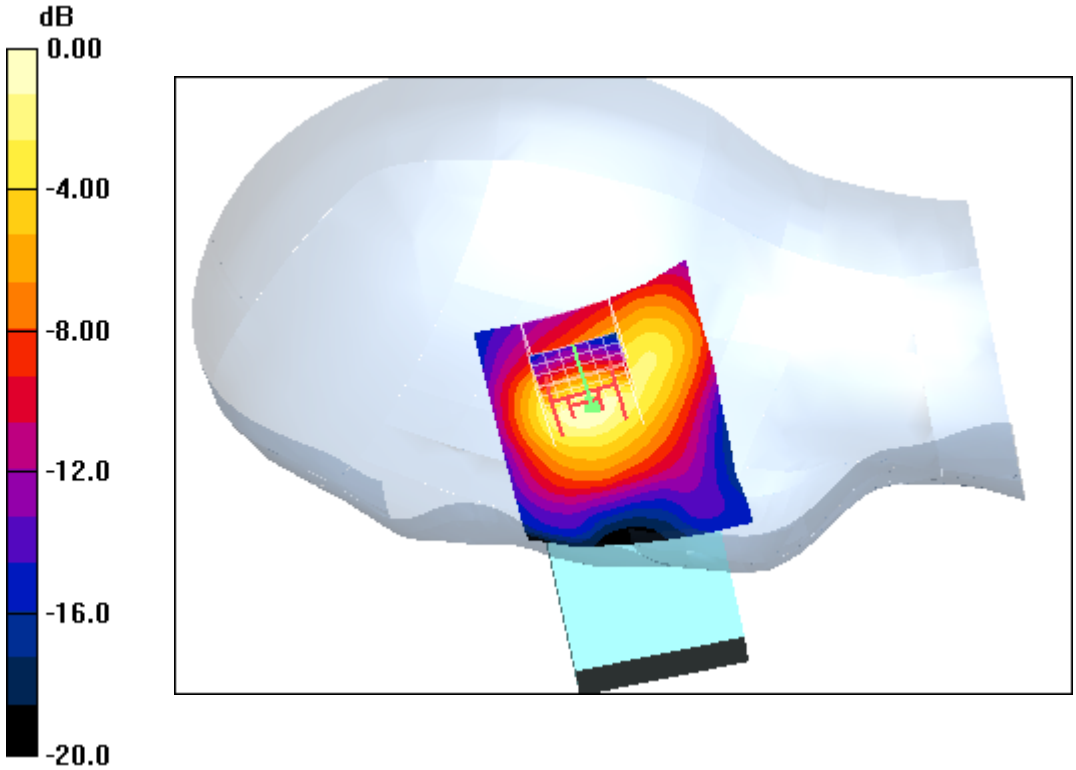

0 dB = 0.300mW/g

Additional information:
ambient temperature: 22.3°C; liquid temperature: 21.9°C

Date/Time: 16.08.2011 15:13:59Date/Time: 16.08.2011 15:20:31

IEEE1528_OET65-RightHandSide_WLAN

DUT: Sony Ericsson; Type: AAD-3880123-BV; Serial: BX902GJNT2
Communication System: WLAN 2450 US; Frequency: 2462 MHz; Duty Cycle: 1:1
Medium: HSL2450 Medium parameters used: f = 2462 MHz; σ = 1.86 mho/m; ε_r = 39.2; ρ = 1000 kg/m^3
Phantom section: Right Section
DASY4 Configuration:
- Probe: ET3DV6 - SN1559; ConvF(4.38, 4.38, 4.38); Calibrated: 19.01.2011
- Sensor-Surface: 4mm (Mechanical And Optical Surface Detection)
- Electronics: DAE3 Sn477; Calibrated: 04.05.2011
- Phantom: SAM left; Type: SAM; Serial: 1041
- Measurement SW: DASY4, V4.7 Build 71; Postprocessing SW: SEMCAD, V1.8 Build 146

Tilt position - High/Area Scan (51x81x1): Measurement grid: dx=15mm, dy=15mm
Maximum value of SAR (interpolated) = 0.185 mW/g

Tilt position - High/Zoom Scan (7x7x7) (7x7x7)/Cube 0: Measurement grid: dx=5mm, dy=5mm, dz=5mm
Reference Value = 9.75 V/m; Power Drift = -0.129 dB
Peak SAR (extrapolated) = 0.276 W/kg
SAR(1 g) = 0.167 mW/g; SAR(10 g) = 0.089 mW/g
Maximum value of SAR (measured) = 0.187 mW/g

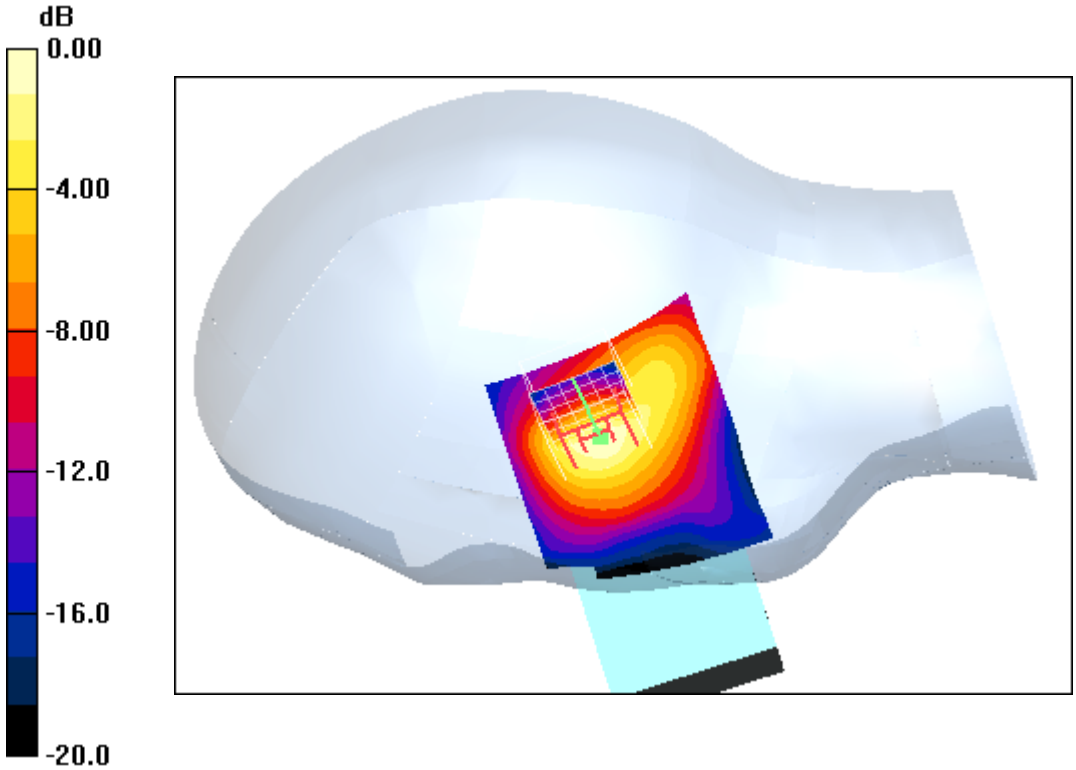

0 dB = 0.187mW/g

Additional information:
ambient temperature: 22.3°C; liquid temperature: 21.9°C

Date/Time: 16.08.2011 16:36:43Date/Time: 16.08.2011 16:45:52

IEEE1528_OET65-LeftHandSide_WLAN

DUT: Sony Ericsson; Type: AAD-3880123-BV; Serial: BX902GJNT2
Communication System: WLAN 2450 US; Frequency: 2412 MHz; Duty Cycle: 1:1
Medium: HSL2450 Medium parameters used: f = 2412 MHz; σ = 1.81 mho/m; ε_r = 39.3; ρ = 1000 kg/m^3
Phantom section: Left Section
DASY4 Configuration:
- Probe: ET3DV6 - SN1559; ConvF(4.38, 4.38, 4.38); Calibrated: 19.01.2011
- Sensor-Surface: 4mm (Mechanical And Optical Surface Detection)
- Electronics: DAE3 Sn477; Calibrated: 04.05.2011
- Phantom: SAM left; Type: SAM; Serial: 1041
- Measurement SW: DASY4, V4.7 Build 71; Postprocessing SW: SEMCAD, V1.8 Build 146

Touch position - Low 6Mbps/Area Scan (51x81x1): Measurement grid: dx=15mm, dy=15mm
Maximum value of SAR (interpolated) = 0.474 mW/g

Touch position - Low 6Mbps/Zoom Scan (7x7x7) (9x7x7)/Cube 0: Measurement grid: dx=5mm, dy=5mm, dz=5mm
Reference Value = 16.4 V/m; Power Drift = 0.101 dB
Peak SAR (extrapolated) = 0.829 W/kg
SAR(1 g) = 0.406 mW/g; SAR(10 g) = 0.201 mW/g
Maximum value of SAR (measured) = 0.459 mW/g

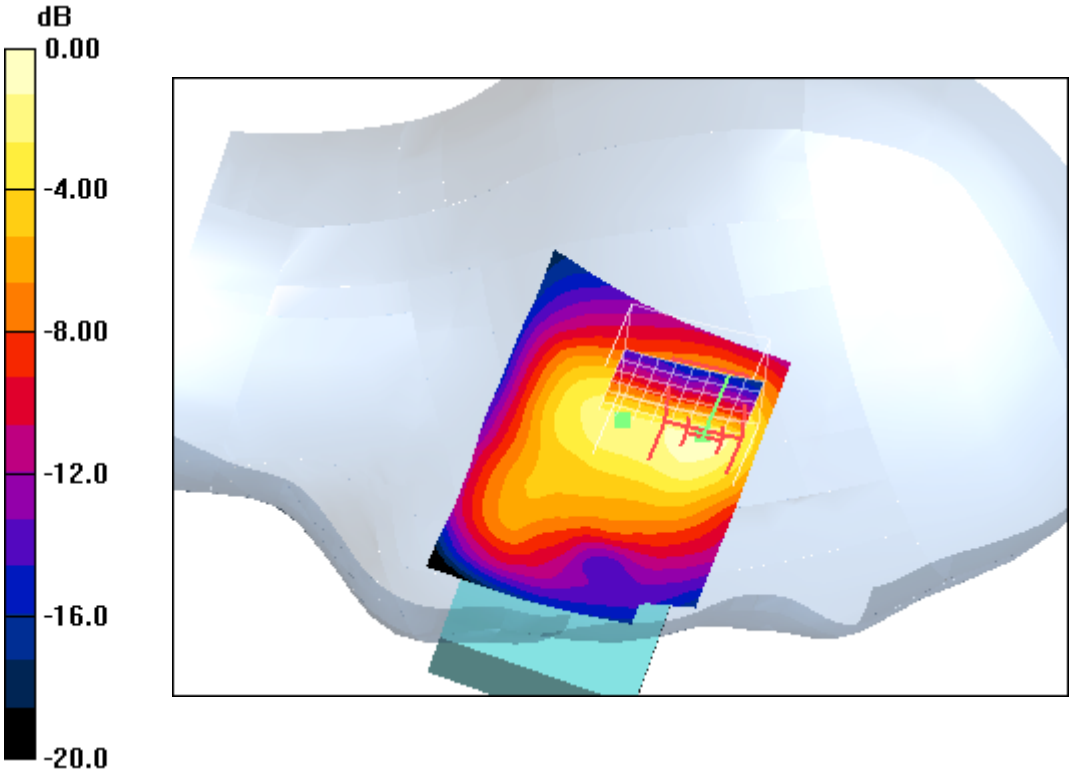

0 dB = 0.459mW/g

Additional information:
ambient temperature: 22.3°C; liquid temperature: 21.9°C

Date/Time: 16.08.2011 17:09:48Date/Time: 16.08.2011 17:19:03

IEEE1528_OET65-LeftHandSide_WLAN

DUT: Sony Ericsson; Type: AAD-3880123-BV; Serial: BX902GJNT2
Communication System: WLAN 2450 US; Frequency: 2412 MHz; Duty Cycle: 1:1
Medium: HSL2450 Medium parameters used: f = 2412 MHz; σ = 1.81 mho/m; ε_r = 39.3; ρ = 1000 kg/m^3
Phantom section: Left Section
DASY4 Configuration:
- Probe: ET3DV6 - SN1559; ConvF(4.38, 4.38, 4.38); Calibrated: 19.01.2011
- Sensor-Surface: 4mm (Mechanical And Optical Surface Detection)
- Electronics: DAE3 Sn477; Calibrated: 04.05.2011
- Phantom: SAM left; Type: SAM; Serial: 1041
- Measurement SW: DASY4, V4.7 Build 71; Postprocessing SW: SEMCAD, V1.8 Build 146

Touch position - Low 6.5Mbps/Area Scan (51x81x1): Measurement grid: dx=15mm, dy=15mm

Maximum value of SAR (interpolated) = 0.453 mW/g

Touch position - Low 6.5Mbps/Zoom Scan (7x7x7) (9x7x7)/Cube 0:

Measurement grid: dx=5mm, dy=5mm, dz=5mm
Reference Value = 16.2 V/m; Power Drift = -0.136 dB
Peak SAR (extrapolated) = 0.790 W/kg
SAR(1 g) = 0.388 mW/g; SAR(10 g) = 0.192 mW/g
Maximum value of SAR (measured) = 0.435 mW/g

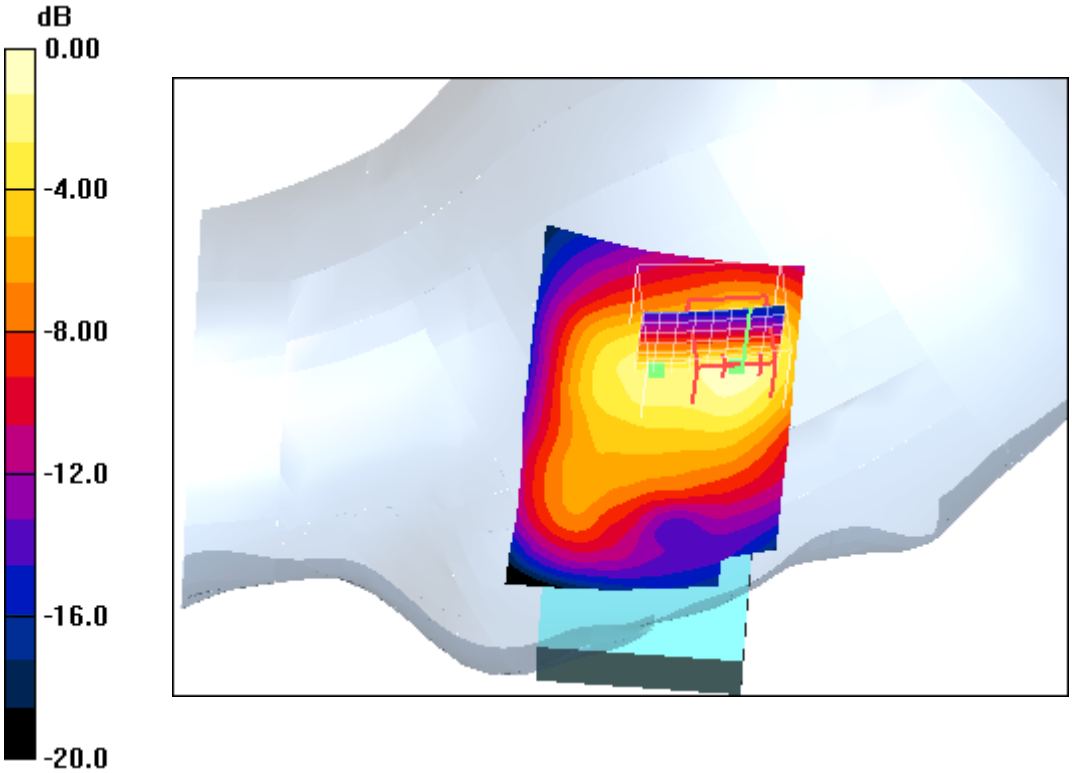

0 dB = 0.435mW/g

Additional information:
ambient temperature: 22.3°C; liquid temperature: 21.9°C

Annex B.6: WLAN 2450MHz body

Date/Time: 17.08.2011 12:30:42Date/Time: 17.08.2011 12:37:28

IEEE1528_OET65-Body_WLAN

DUT: Sony Ericsson; Type: AAD-3880123-BV; Serial: BX902GJNT2
Communication System: WLAN 2450 US; Frequency: 2412 MHz; Duty Cycle: 1:1
Medium: M2450 Medium parameters used: f = 2412 MHz; σ = 1.94 mho/m; ε_r = 51.8; ρ = 1000 kg/m^3
Phantom section: Flat Section
DASY4 Configuration:
- Probe: ET3DV6 - SN1559; ConvF(3.91, 3.91, 3.91); Calibrated: 19.01.2011
- Sensor-Surface: 4mm (Mechanical And Optical Surface Detection)
- Electronics: DAE3 Sn477; Calibrated: 04.05.2011
- Phantom: SAM right; Type: SAM; Serial: 1042
- Measurement SW: DASY4, V4.7 Build 71; Postprocessing SW: SEMCAD, V1.8 Build 146

Front position - Low/Area Scan (51x81x1): Measurement grid: dx=15mm, dy=15mm

Maximum value of SAR (interpolated) = 0.211 mW/g

Front position - Low/Zoom Scan (7x7x7) (7x7x7)/Cube 0: Measurement grid: dx=5mm, dy=5mm, dz=5mm

Reference Value = 11.4 V/m; Power Drift = -0.026 dB
Peak SAR (extrapolated) = 0.270 W/kg
SAR(1 g) = 0.185 mW/g; SAR(10 g) = 0.114 mW/g
Maximum value of SAR (measured) = 0.201 mW/g

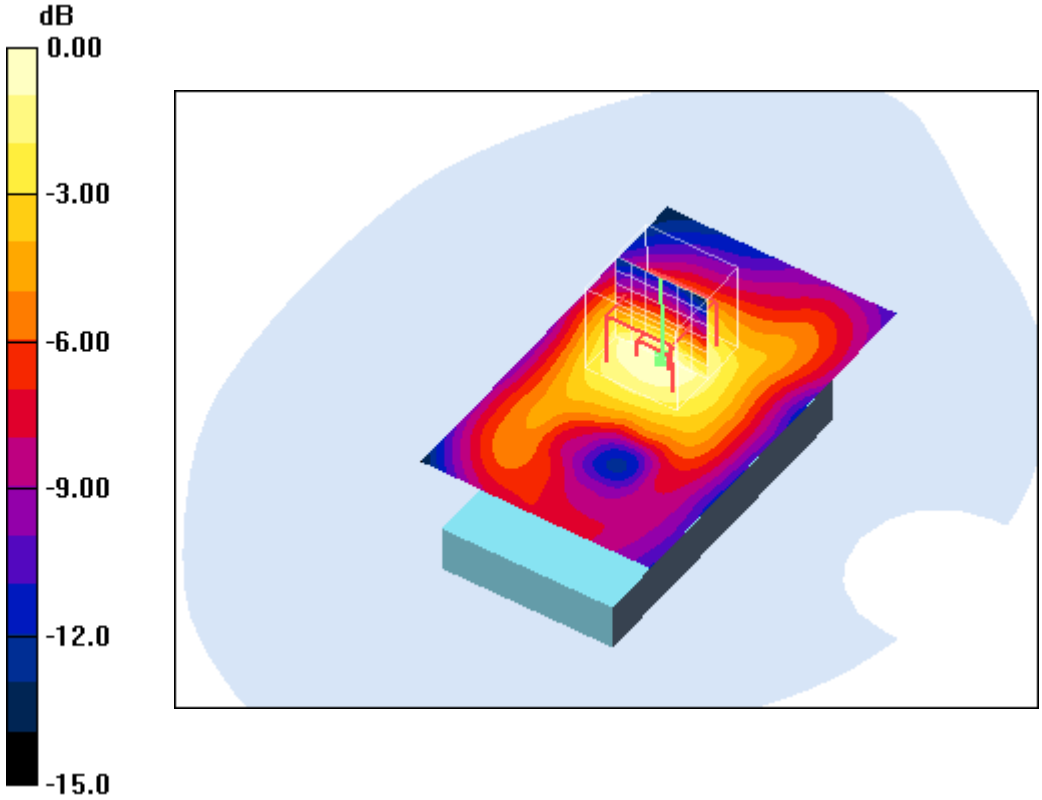

0 dB = 0.201mW/g

Additional information:
position or distance of DUT to SAM (if not standard head positions) : 10mm
ambient temperature: 23.9°C; liquid temperature: 23.3°C

Date/Time: 17.08.2011 10:43:47Date/Time: 17.08.2011 10:51:05

IEEE1528_OET65-Body_WLAN

DUT: Sony Ericsson; Type: AAD-3880123-BV; Serial: BX902GJNT2
Communication System: WLAN 2450 US; Frequency: 2437 MHz; Duty Cycle: 1:1
Medium: M2450 Medium parameters used (interpolated): f = 2437 MHz; σ = 1.97 mho/m; ε_r = 51.8; ρ = 1000 kg/m^3
Phantom section: Flat Section
DASY4 Configuration:
- Probe: ET3DV6 - SN1559; ConvF(3.91, 3.91, 3.91); Calibrated: 19.01.2011
- Sensor-Surface: 4mm (Mechanical And Optical Surface Detection)
- Electronics: DAE3 Sn477; Calibrated: 04.05.2011
- Phantom: SAM right; Type: SAM; Serial: 1042
- Measurement SW: DASY4, V4.7 Build 71; Postprocessing SW: SEMCAD, V1.8 Build 146

Front position - Middle/Area Scan (51x81x1): Measurement grid: dx=15mm, dy=15mm

Maximum value of SAR (interpolated) = 0.117 mW/g

Front position - Middle/Zoom Scan (7x7x7) (7x7x7)/Cube 0: Measurement grid: dx=5mm, dy=5mm, dz=5mm

Reference Value = 8.09 V/m; Power Drift = -0.133 dB
Peak SAR (extrapolated) = 0.143 W/kg
SAR(1 g) = 0.099 mW/g; SAR(10 g) = 0.061 mW/g
Maximum value of SAR (measured) = 0.108 mW/g

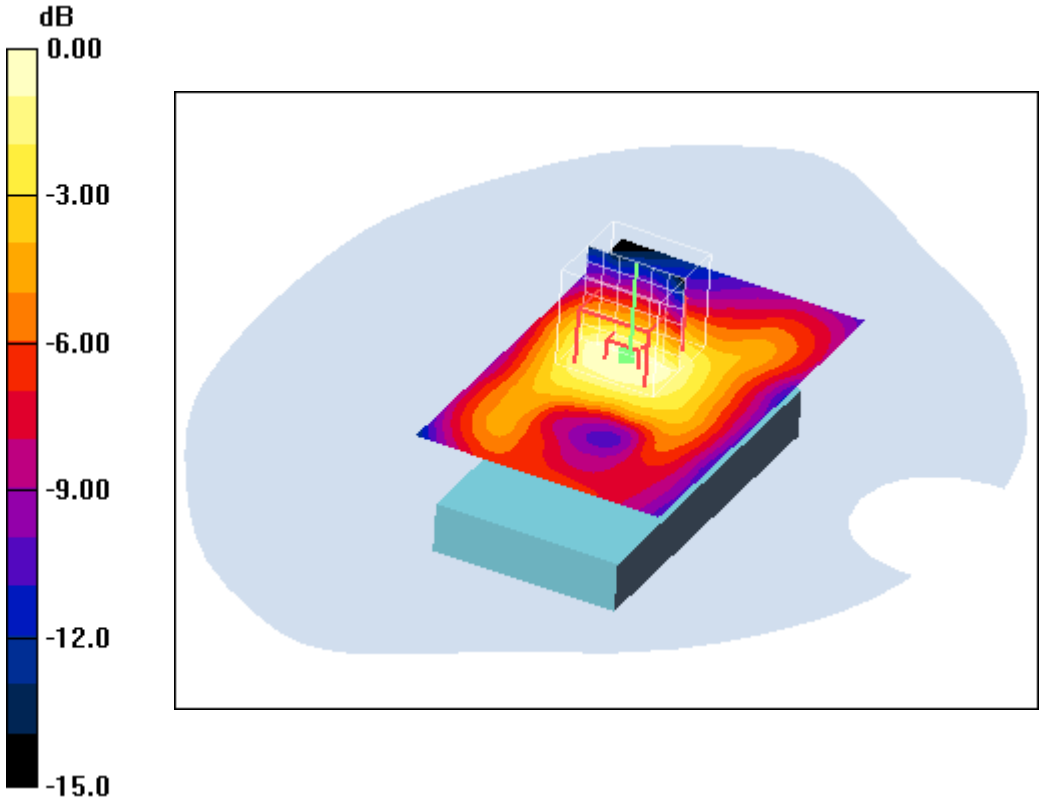

0 dB = 0.108mW/g

Additional information:
position or distance of DUT to SAM (if not standard head positions) : 10mm
ambient temperature: 23.9°C; liquid temperature: 23.3°C

Date/Time: 17.08.2011 12:55:27Date/Time: 17.08.2011 13:02:44

IEEE1528_OET65-Body_WLAN

DUT: Sony Ericsson; Type: AAD-3880123-BV; Serial: BX902GJNT2
Communication System: WLAN 2450 US; Frequency: 2462 MHz; Duty Cycle: 1:1
Medium: M2450 Medium parameters used: f = 2462 MHz; σ = 2 mho/m; ε_r = 51.7; ρ = 1000 kg/m^3
Phantom section: Flat Section
DASY4 Configuration:
- Probe: ET3DV6 - SN1559; ConvF(3.91, 3.91, 3.91); Calibrated: 19.01.2011
- Sensor-Surface: 4mm (Mechanical And Optical Surface Detection)Sensor-Surface: 4mm (Mechanical Surface Detection)
- Electronics: DAE3 Sn477; Calibrated: 04.05.2011
- Phantom: SAM right; Type: SAM; Serial: 1042
- Measurement SW: DASY4, V4.7 Build 71; Postprocessing SW: SEMCAD, V1.8 Build 146

Front position - High/Area Scan (51x81x1): Measurement grid: dx=15mm, dy=15mm

Maximum value of SAR (interpolated) = 0.067 mW/g

Front position - High/Zoom Scan (7x7x7) (7x7x7)/Cube 0: Measurement grid: dx=5mm, dy=5mm, dz=5mm

Reference Value = 6.09 V/m; Power Drift = -0.037 dB
Peak SAR (extrapolated) = 0.084 W/kg
SAR(1 g) = 0.058 mW/g; SAR(10 g) = 0.036 mW/g
Maximum value of SAR (measured) = 0.062 mW/g

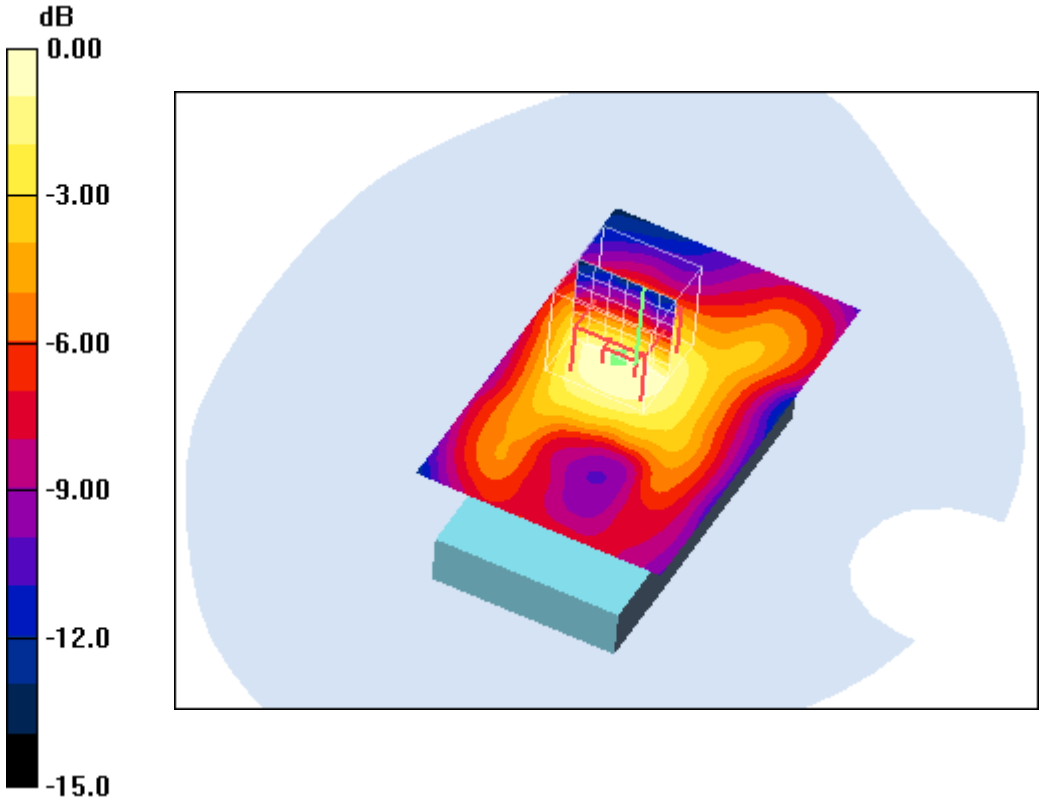

0 dB = 0.062mW/g

Additional information:
position or distance of DUT to SAM (if not standard head positions) : 10mm
ambient temperature: 23.9°C; liquid temperature: 23.3°C

Date/Time: 17.08.2011 11:46:42Date/Time: 17.08.2011 12:00:01

IEEE1528_OET65-Body_WLAN

DUT: Sony Ericsson; Type: AAD-3880123-BV; Serial: BX902GJNT2
Communication System: WLAN 2450 US; Frequency: 2412 MHz; Duty Cycle: 1:1
Medium: M2450 Medium parameters used: f = 2412 MHz; σ = 1.94 mho/m; ε_r = 51.8; ρ = 1000 kg/m^3
Phantom section: Flat Section
DASY4 Configuration:
- Probe: ET3DV6 - SN1559; ConvF(3.91, 3.91, 3.91); Calibrated: 19.01.2011
- Sensor-Surface: 4mm (Mechanical And Optical Surface Detection)
- Electronics: DAE3 Sn477; Calibrated: 04.05.2011
- Phantom: SAM right; Type: SAM; Serial: 1042
- Measurement SW: DASY4, V4.7 Build 71; Postprocessing SW: SEMCAD, V1.8 Build 146

Rear position - Low/Area Scan (51x81x1): Measurement grid: dx=15mm, dy=15mm

Maximum value of SAR (interpolated) = 0.281 mW/g

Rear position - Low/Zoom Scan (7x7x7) (11x7x7)/Cube 0: Measurement grid: dx=5mm, dy=5mm, dz=5mm

Reference Value = 12.5 V/m; Power Drift = 0.020 dB
Peak SAR (extrapolated) = 0.429 W/kg
SAR(1 g) = 0.253 mW/g; SAR(10 g) = 0.140 mW/g
Maximum value of SAR (measured) = 0.291 mW/g

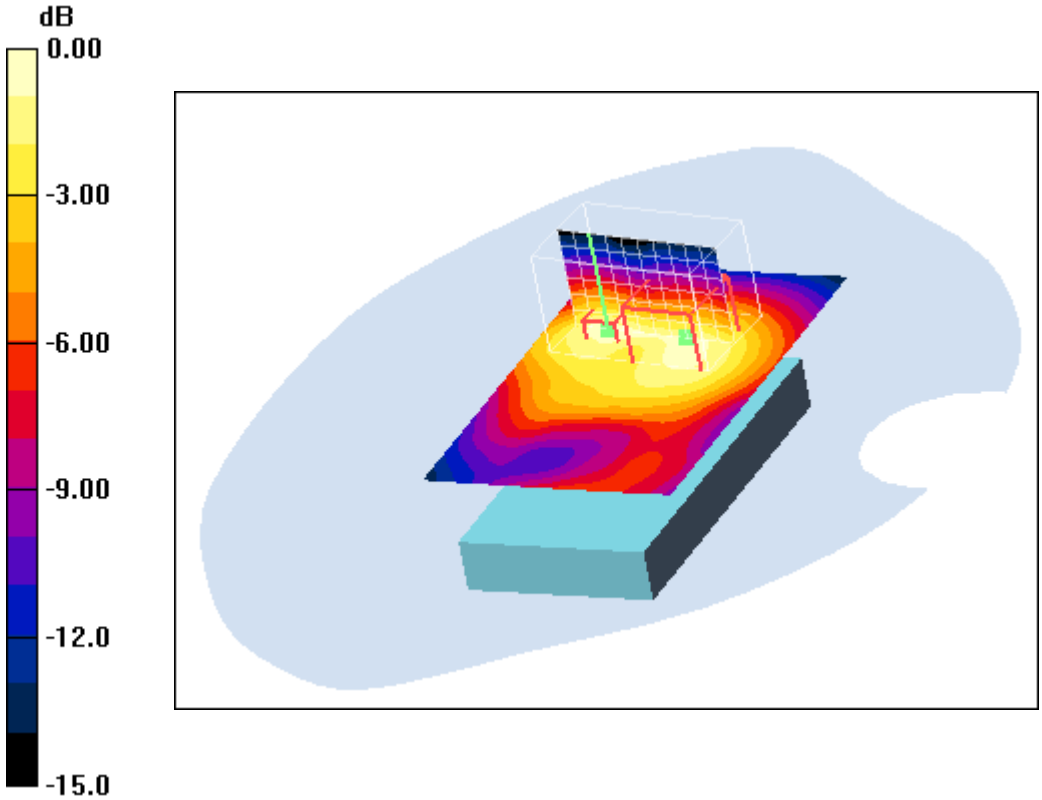

0 dB = 0.291mW/g

Additional information:
position or distance of DUT to SAM (if not standard head positions) : 10mm
ambient temperature: 23.9°C; liquid temperature: 23.3°C

Date/Time: 17.08.2011 11:08:45Date/Time: 17.08.2011 11:18:12

IEEE1528_OET65-Body_WLAN

DUT: Sony Ericsson; Type: AAD-3880123-BV; Serial: BX902GJNT2
Communication System: WLAN 2450 US; Frequency: 2437 MHz; Duty Cycle: 1:1
Medium: M2450 Medium parameters used (interpolated): f = 2437 MHz; σ = 1.97 mho/m; ε_r = 51.8; ρ = 1000 kg/m^3
Phantom section: Flat Section
DASY4 Configuration:
- Probe: ET3DV6 - SN1559; ConvF(3.91, 3.91, 3.91); Calibrated: 19.01.2011
- Sensor-Surface: 4mm (Mechanical And Optical Surface Detection)
- Electronics: DAE3 Sn477; Calibrated: 04.05.2011
- Phantom: SAM right; Type: SAM; Serial: 1042
- Measurement SW: DASY4, V4.7 Build 71; Postprocessing SW: SEMCAD, V1.8 Build 146

Rear position - Middle/Area Scan (51x81x1): Measurement grid: dx=15mm, dy=15mm

Maximum value of SAR (interpolated) = 0.152 mW/g

Rear position - Middle/Zoom Scan (7x7x7) (10x7x7)/Cube 0: Measurement grid: dx=5mm, dy=5mm, dz=5mm

Reference Value = 9.65 V/m; Power Drift = -0.112 dB
Peak SAR (extrapolated) = 0.239 W/kg
SAR(1 g) = 0.141 mW/g; SAR(10 g) = 0.082 mW/g
Maximum value of SAR (measured) = 0.160 mW/g

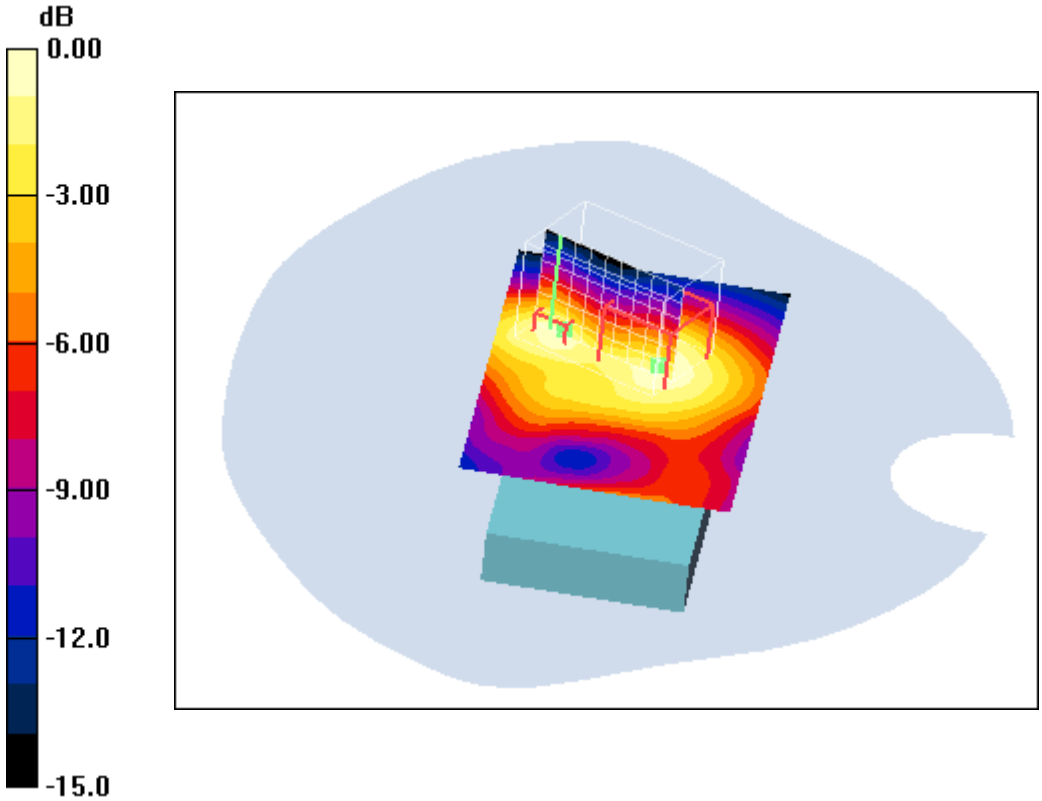

0 dB = 0.160mW/g

Additional information:
position or distance of DUT to SAM (if not standard head positions) : 10mm
ambient temperature: 23.9°C; liquid temperature: 23.3°C

Date/Time: 17.08.2011 13:18:58Date/Time: 17.08.2011 13:45:39

IEEE1528_OET65-Body_WLAN

DUT: Sony Ericsson; Type: AAD-3880123-BV; Serial: BX902GJNT2
Communication System: WLAN 2450 US; Frequency: 2462 MHz; Duty Cycle: 1:1
Medium: M2450 Medium parameters used: f = 2462 MHz; σ = 2 mho/m; ε_r = 51.7; ρ = 1000 kg/m^3
Phantom section: Flat Section
DASY4 Configuration:
- Probe: ET3DV6 - SN1559; ConvF(3.91, 3.91, 3.91); Calibrated: 19.01.2011
- Sensor-Surface: 4mm (Mechanical And Optical Surface Detection)Sensor-Surface: 4mm (Mechanical Surface Detection)
- Electronics: DAE3 Sn477; Calibrated: 04.05.2011
- Phantom: SAM right; Type: SAM; Serial: 1042
- Measurement SW: DASY4, V4.7 Build 71; Postprocessing SW: SEMCAD, V1.8 Build 146

Rear position - High/Area Scan (51x81x1): Measurement grid: dx=15mm, dy=15mm

Maximum value of SAR (interpolated) = 0.118 mW/g

Rear position - High/Zoom Scan (7x7x7) (12x7x7)/Cube 0: Measurement grid: dx=5mm, dy=5mm, dz=5mm

Reference Value = 8.08 V/m; Power Drift = -0.153 dB
Peak SAR (extrapolated) = 0.175 W/kg
SAR(1 g) = 0.103 mW/g; SAR(10 g) = 0.060 mW/g
Maximum value of SAR (measured) = 0.115 mW/g

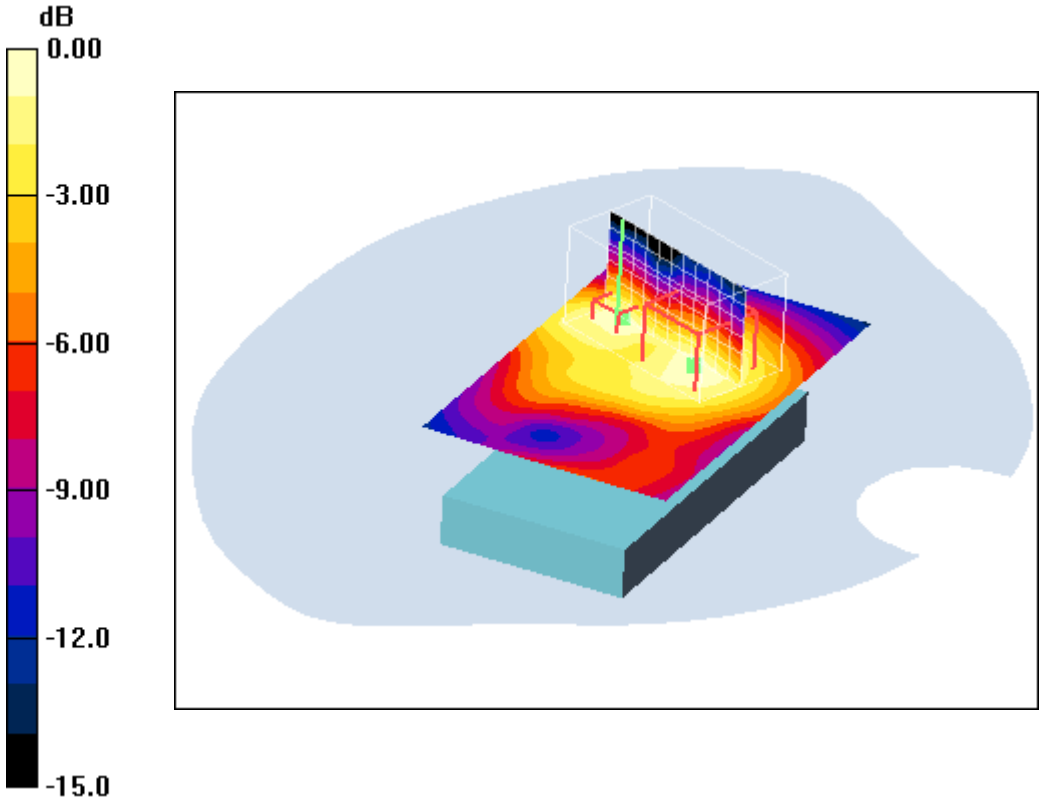

0 dB = 0.115mW/g

Additional information:
position or distance of DUT to SAM (if not standard head positions) : 10mm
ambient temperature: 23.9°C; liquid temperature: 23.3°C

Date/Time: 17.08.2011 09:25:15Date/Time: 17.08.2011 09:33:05Date/Time: 17.08.2011 09:45:36

IEEE1528_OET65-Body_WLAN

DUT: Sony Ericsson; Type: AAD-3880123-BV; Serial: BX902GJNT2
Communication System: WLAN 2450 US; Frequency: 2437 MHz; Duty Cycle: 1:1
Medium: M2450 Medium parameters used (interpolated): f = 2437 MHz; σ = 1.97 mho/m; ε_r = 51.8; ρ = 1000 kg/m^3
Phantom section: Flat Section
DASY4 Configuration:
- Probe: ET3DV6 - SN1559; ConvF(3.91, 3.91, 3.91); Calibrated: 19.01.2011
- Sensor-Surface: 4mm (Mechanical And Optical Surface Detection)
- Electronics: DAE3 Sn477; Calibrated: 04.05.2011
- Phantom: SAM right; Type: SAM; Serial: 1042
- Measurement SW: DASY4, V4.7 Build 71; Postprocessing SW: SEMCAD, V1.8 Build 146

Edge left position - Middle/Area Scan (51x81x1): Measurement grid: dx=15mm, dy=15mm
Maximum value of SAR (interpolated) = 0.061 mW/g

Edge left position - Middle/Zoom Scan (7x7x7) (7x7x7)/Cube 0: Measurement grid: dx=5mm, dy=5mm, dz=5mm
Reference Value = 5.99 V/m; Power Drift = -0.154 dB
Peak SAR (extrapolated) = 0.080 W/kg
SAR(1 g) = 0.052 mW/g; SAR(10 g) = 0.031 mW/g
Maximum value of SAR (measured) = 0.058 mW/g

Edge left position - Middle/Zoom Scan (7x7x7) (7x7x7)/Cube 1: Measurement grid: dx=5mm, dy=5mm, dz=5mm
Reference Value = 5.99 V/m; Power Drift = -0.154 dB
Peak SAR (extrapolated) = 0.085 W/kg
SAR(1 g) = 0.054 mW/g; SAR(10 g) = 0.033 mW/g

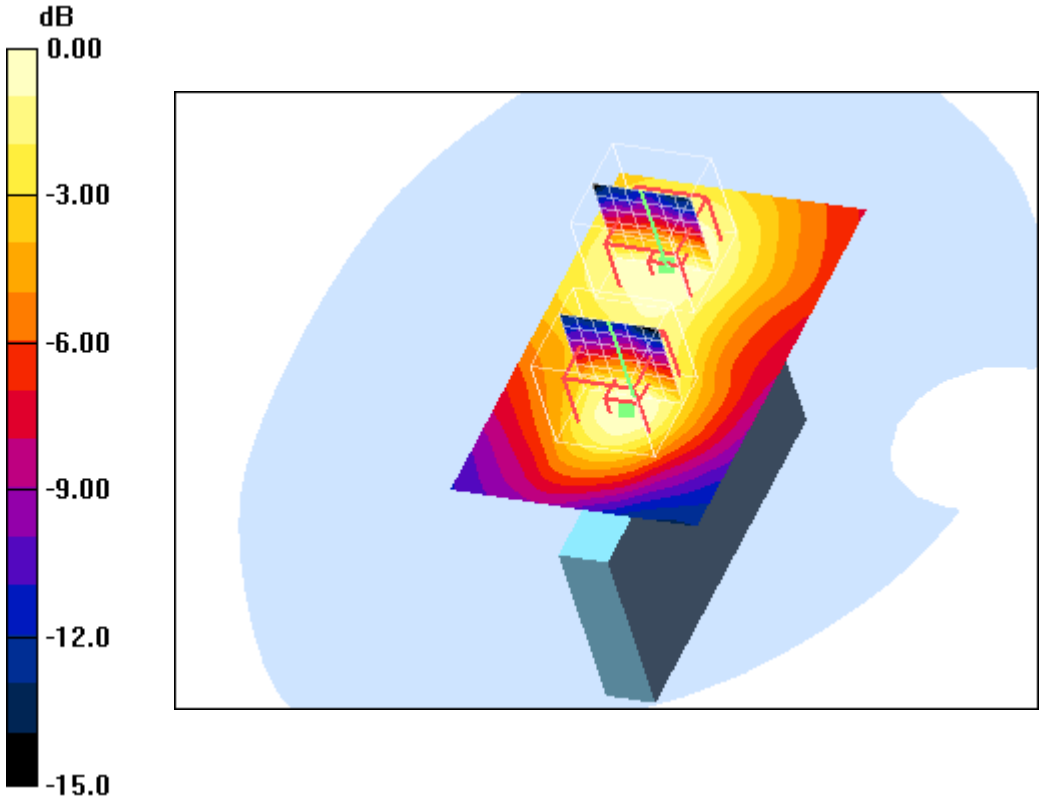

0 dB = 0.058mW/g

Additional information:
position or distance of DUT to SAM (if not standard head positions) : 10mm
ambient temperature: 23.9°C; liquid temperature: 23.3°C

Date/Time: 17.08.2011 10:20:33Date/Time: 17.08.2011 10:28:00

IEEE1528_OET65-Body_WLAN

DUT: Sony Ericsson; Type: AAD-3880123-BV; Serial: BX902GJNT2
Communication System: WLAN 2450 US; Frequency: 2437 MHz; Duty Cycle: 1:1
Medium: M2450 Medium parameters used (interpolated): f = 2437 MHz; σ = 1.97 mho/m; ε_r = 51.8; ρ = 1000 kg/m^3
Phantom section: Flat Section
DASY4 Configuration:
- Probe: ET3DV6 - SN1559; ConvF(3.91, 3.91, 3.91); Calibrated: 19.01.2011
- Sensor-Surface: 4mm (Mechanical And Optical Surface Detection)
- Electronics: DAE3 Sn477; Calibrated: 04.05.2011
- Phantom: SAM right; Type: SAM; Serial: 1042
- Measurement SW: DASY4, V4.7 Build 71; Postprocessing SW: SEMCAD, V1.8 Build 146

Edge right position - Middle/Area Scan (51x81x1): Measurement grid: dx=15mm, dy=15mm

Maximum value of SAR (interpolated) = 0.142 mW/g

Edge right position - Middle/Zoom Scan (7x7x7) (7x7x7)/Cube 0: Measurement grid: dx=5mm, dy=5mm, dz=5mm

Reference Value = 8.61 V/m; Power Drift = 0.047 dB
Peak SAR (extrapolated) = 0.184 W/kg
SAR(1 g) = 0.114 mW/g; SAR(10 g) = 0.063 mW/g
Maximum value of SAR (measured) = 0.127 mW/g

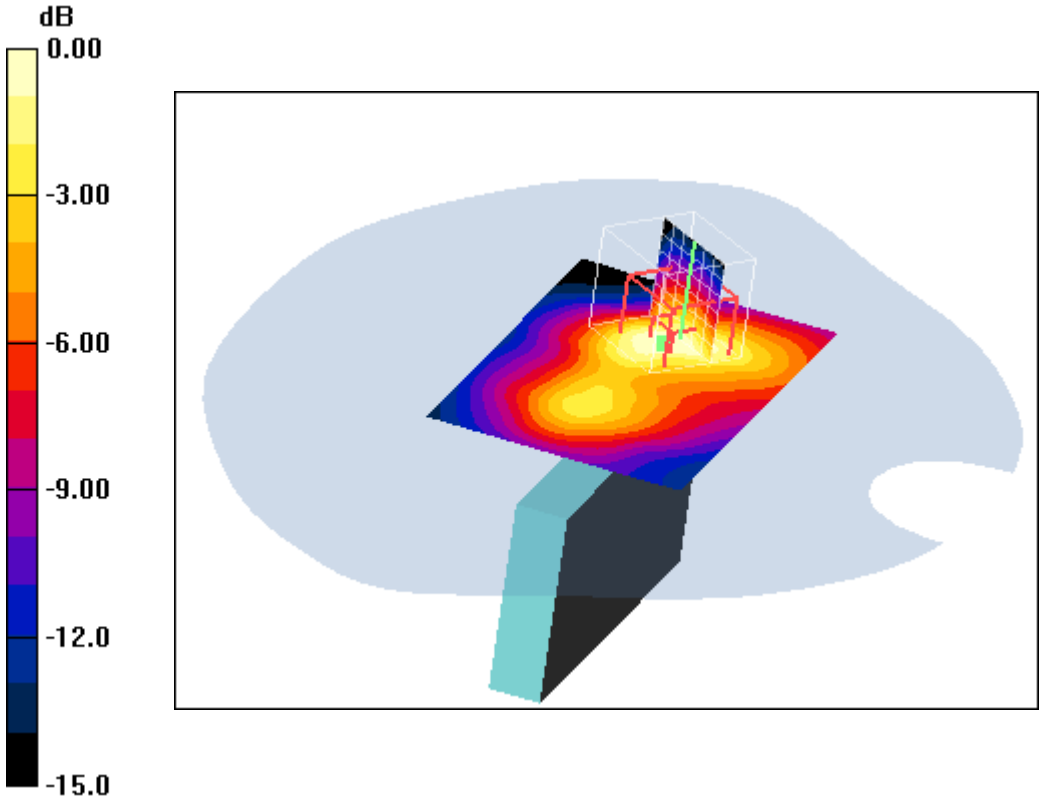

0 dB = 0.127mW/g

Additional information:
position or distance of DUT to SAM (if not standard head positions) : 10mm
ambient temperature: 23.9°C; liquid temperature: 23.3°C

Date/Time: 17.08.2011 09:00:34Date/Time: 17.08.2011 09:07:58

IEEE1528_OET65-Body_WLAN

DUT: Sony Ericsson; Type: AAD-3880123-BV; Serial: BX902GJNT2
Communication System: WLAN 2450 US; Frequency: 2437 MHz; Duty Cycle: 1:1
Medium: M2450 Medium parameters used (interpolated): f = 2437 MHz; σ = 1.97 mho/m; ε_r = 51.8; ρ = 1000 kg/m^3
Phantom section: Flat Section
DASY4 Configuration:
- Probe: ET3DV6 - SN1559; ConvF(3.91, 3.91, 3.91); Calibrated: 19.01.2011
- Sensor-Surface: 4mm (Mechanical And Optical Surface Detection)
- Electronics: DAE3 Sn477; Calibrated: 04.05.2011
- Phantom: SAM right; Type: SAM; Serial: 1042
- Measurement SW: DASY4, V4.7 Build 71; Postprocessing SW: SEMCAD, V1.8 Build 146

Edge top position - Middle/Area Scan (61x61x1): Measurement grid: dx=15mm, dy=15mm

Maximum value of SAR (interpolated) = 0.098 mW/g

Edge top position - Middle/Zoom Scan (7x7x7) (8x7x7)/Cube 0: Measurement grid: dx=5mm, dy=5mm, dz=5mm

Reference Value = 7.64 V/m; Power Drift = -0.111 dB
Peak SAR (extrapolated) = 0.145 W/kg
SAR(1 g) = 0.086 mW/g; SAR(10 g) = 0.051 mW/g
Maximum value of SAR (measured) = 0.094 mW/g

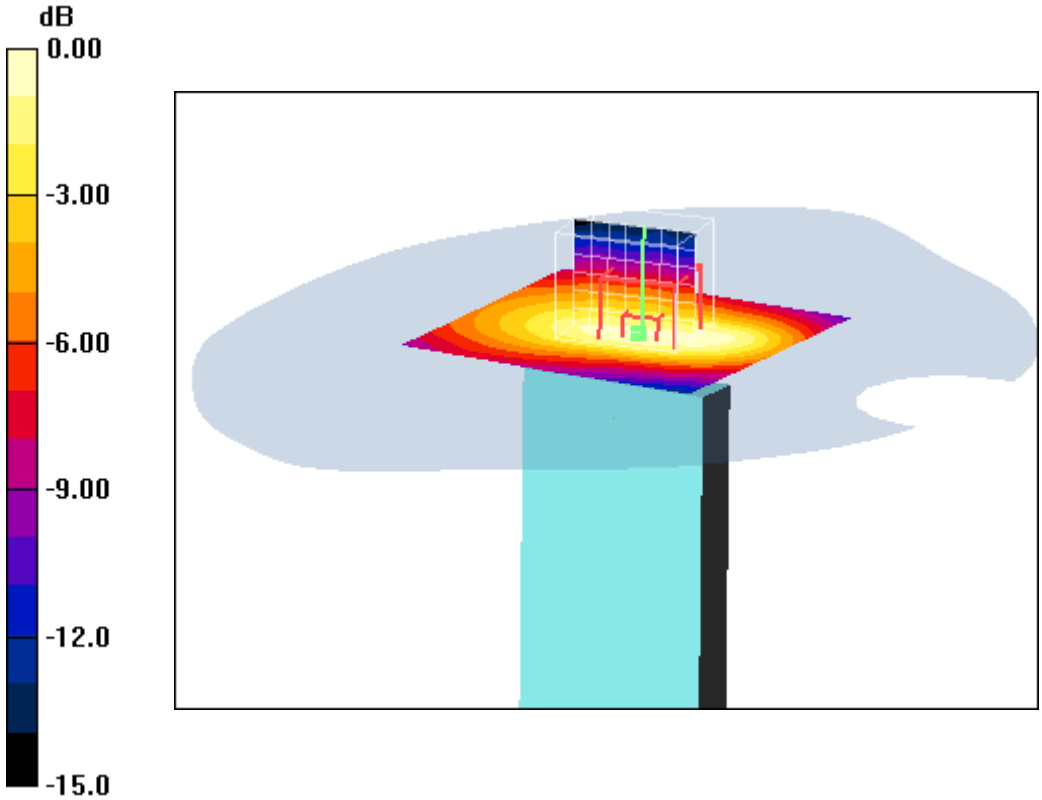

0 dB = 0.094mW/g

Additional information:
position or distance of DUT to SAM (if not standard head positions) : 10mm
ambient temperature: 23.9°C; liquid temperature: 23.3°C

Date/Time: 17.08.2011 15:08:50Date/Time: 17.08.2011 15:17:49

IEEE1528_OET65-Body_WLAN

DUT: Sony Ericsson; Type: AAD-3880123-BV; Serial: BX902GJNT2
Communication System: WLAN 2450 US; Frequency: 2412 MHz; Duty Cycle: 1:1
Medium: M2450 Medium parameters used: f = 2412 MHz; σ = 1.94 mho/m; ε_r = 51.8; ρ = 1000 kg/m^3
Phantom section: Flat Section
DASY4 Configuration:
- Probe: ET3DV6 - SN1559; ConvF(3.91, 3.91, 3.91); Calibrated: 19.01.2011
- Sensor-Surface: 4mm (Mechanical And Optical Surface Detection)
- Electronics: DAE3 Sn477; Calibrated: 04.05.2011
- Phantom: SAM right; Type: SAM; Serial: 1042
- Measurement SW: DASY4, V4.7 Build 71; Postprocessing SW: SEMCAD, V1.8 Build 146

Rear position - Low 6Mbps/Area Scan (51x81x1): Measurement grid: dx=15mm, dy=15mm

Maximum value of SAR (interpolated) = 0.209 mW/g

Rear position - Low 6Mbps/Zoom Scan (7x7x7) (11x7x7)/Cube 0: Measurement grid: dx=5mm, dy=5mm, dz=5mm

Reference Value = 11.4 V/m; Power Drift = -0.011 dB
Peak SAR (extrapolated) = 0.350 W/kg
SAR(1 g) = 0.203 mW/g; SAR(10 g) = 0.116 mW/g
Maximum value of SAR (measured) = 0.237 mW/g

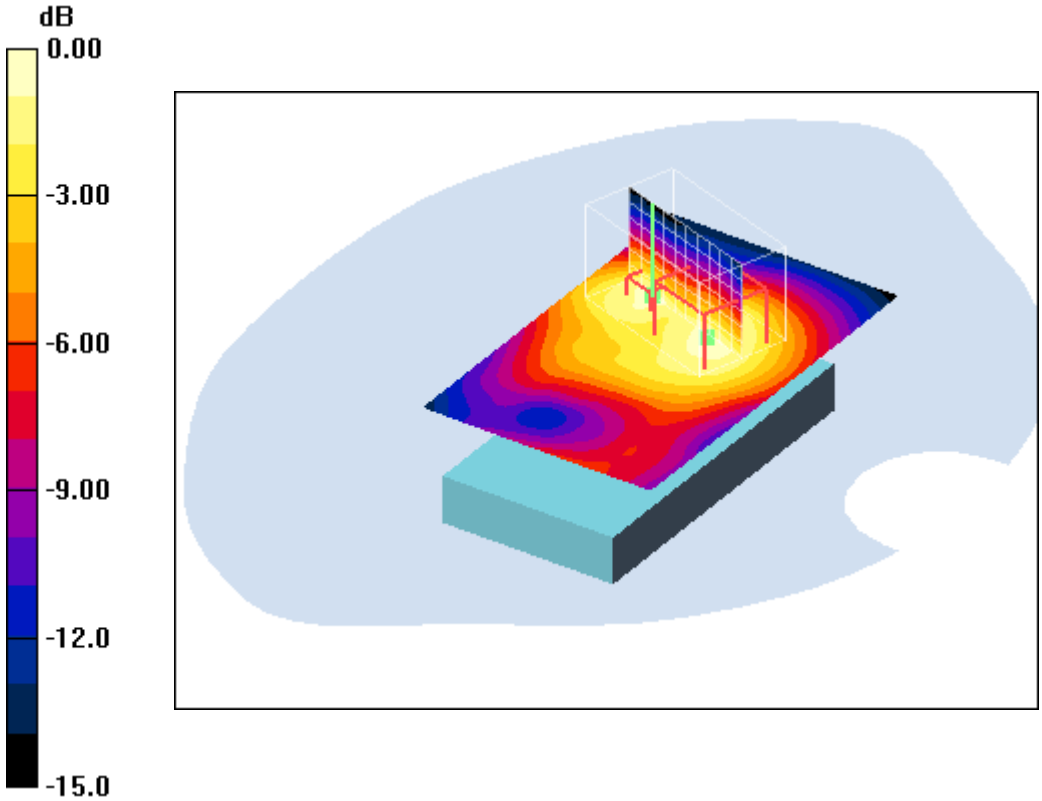

0 dB = 0.237mW/g

Additional information:
position or distance of DUT to SAM (if not standard head positions) : 10mm
ambient temperature: 23.9°C; liquid temperature: 23.3°C

Date/Time: 17.08.2011 15:48:16Date/Time: 17.08.2011 15:57:50

IEEE1528_OET65-Body_WLAN

DUT: Sony Ericsson; Type: AAD-3880123-BV; Serial: BX902GJNT2
Communication System: WLAN 2450 US; Frequency: 2412 MHz; Duty Cycle: 1:1
Medium: M2450 Medium parameters used: f = 2412 MHz; σ = 1.94 mho/m; ε_r = 51.8; ρ = 1000 kg/m^3
Phantom section: Flat Section
DASY4 Configuration:
- Probe: ET3DV6 - SN1559; ConvF(3.91, 3.91, 3.91); Calibrated: 19.01.2011
- Sensor-Surface: 4mm (Mechanical And Optical Surface Detection)
- Electronics: DAE3 Sn477; Calibrated: 04.05.2011
- Phantom: SAM right; Type: SAM; Serial: 1042
- Measurement SW: DASY4, V4.7 Build 71; Postprocessing SW: SEMCAD, V1.8 Build 146

Rear position - Low 6.5Mbps/Area Scan (51x81x1): Measurement grid: dx=15mm, dy=15mm

Maximum value of SAR (interpolated) = 0.214 mW/g

Rear position - Low 6.5Mbps/Zoom Scan (7x7x7) (11x7x7)/Cube 0:

Measurement grid: dx=5mm, dy=5mm, dz=5mm
Reference Value = 10.9 V/m; Power Drift = 0.024 dB
Peak SAR (extrapolated) = 0.337 W/kg
SAR(1 g) = 0.199 mW/g; SAR(10 g) = 0.106 mW/g
Maximum value of SAR (measured) = 0.231 mW/g

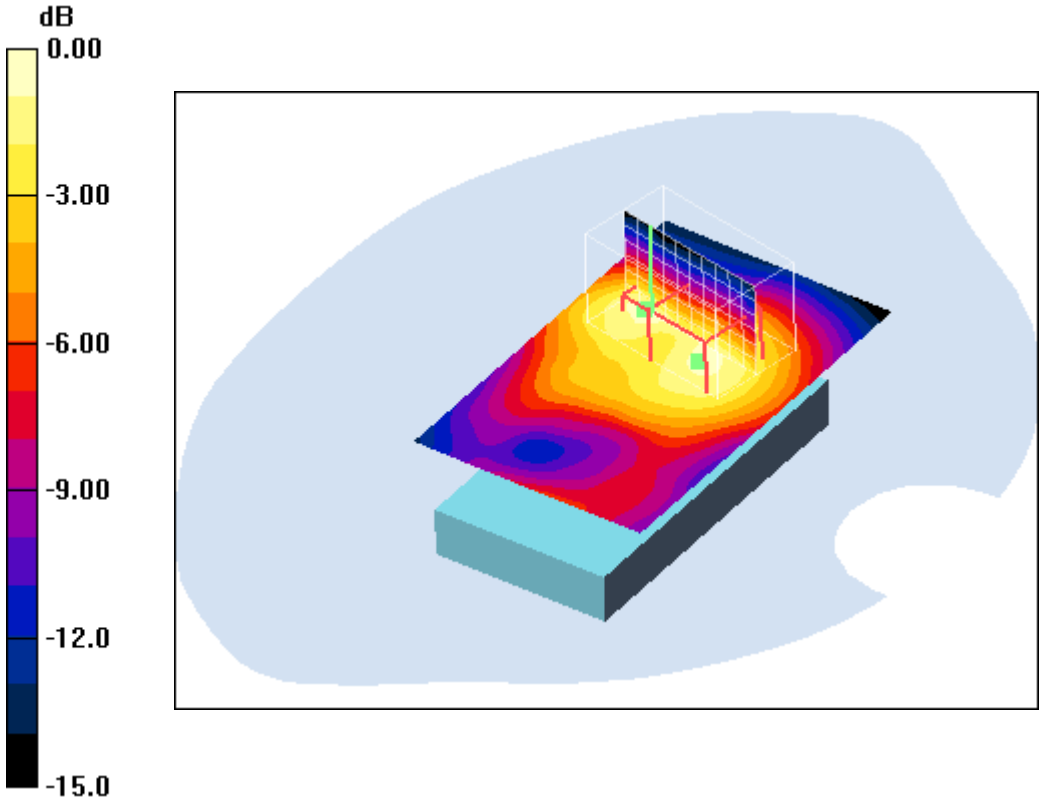

0 dB = 0.231mW/g

Additional information:
position or distance of DUT to SAM (if not standard head positions) : 10mm
ambient temperature: 23.9°C; liquid temperature: 23.3°C

Annex B.7: Z-axis scan

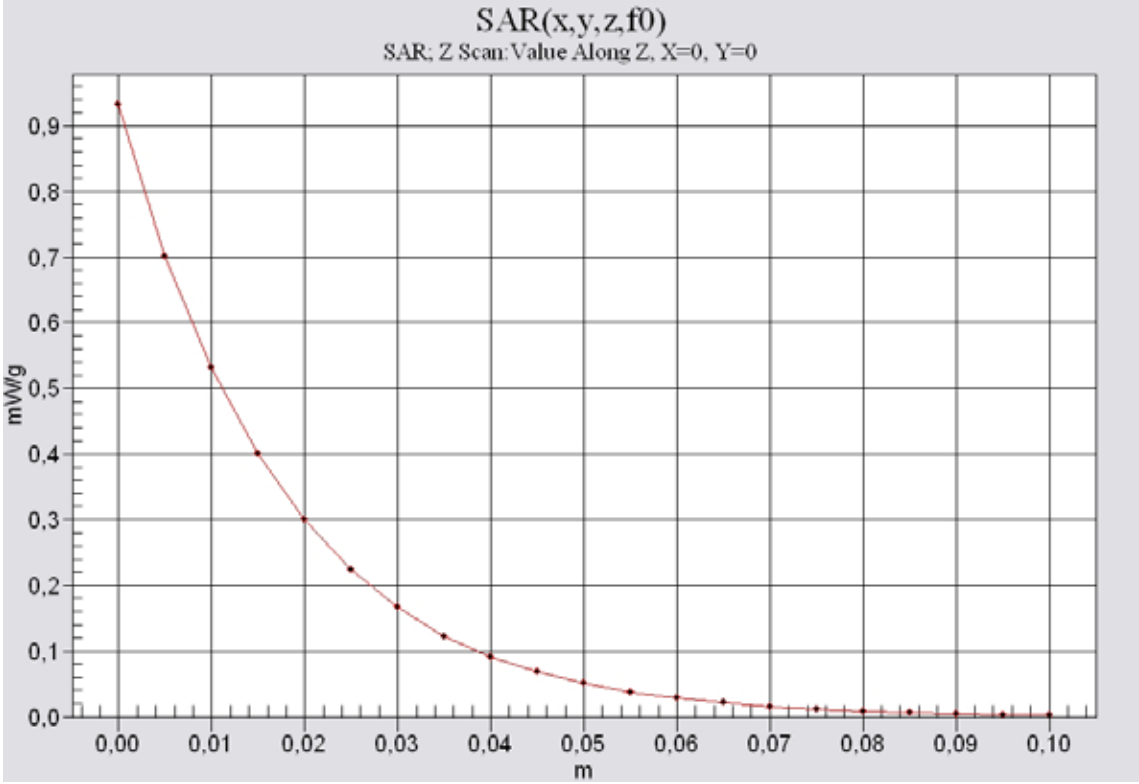

850 head

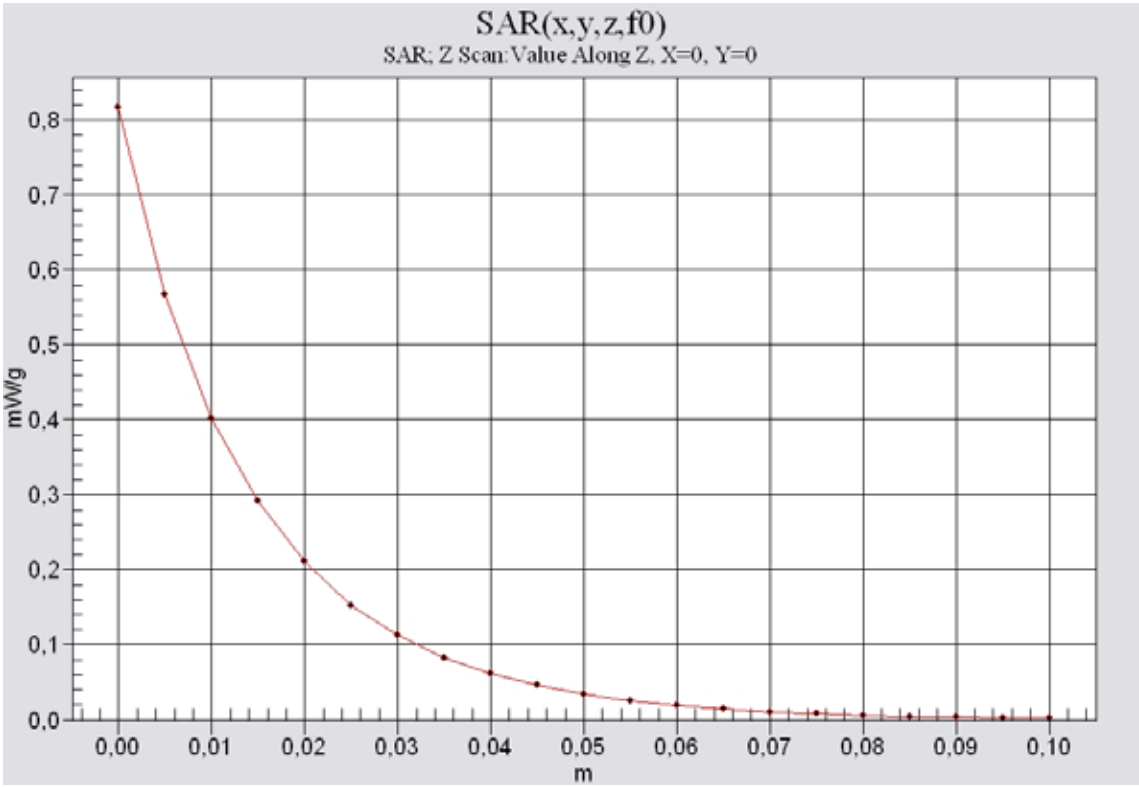

850 body

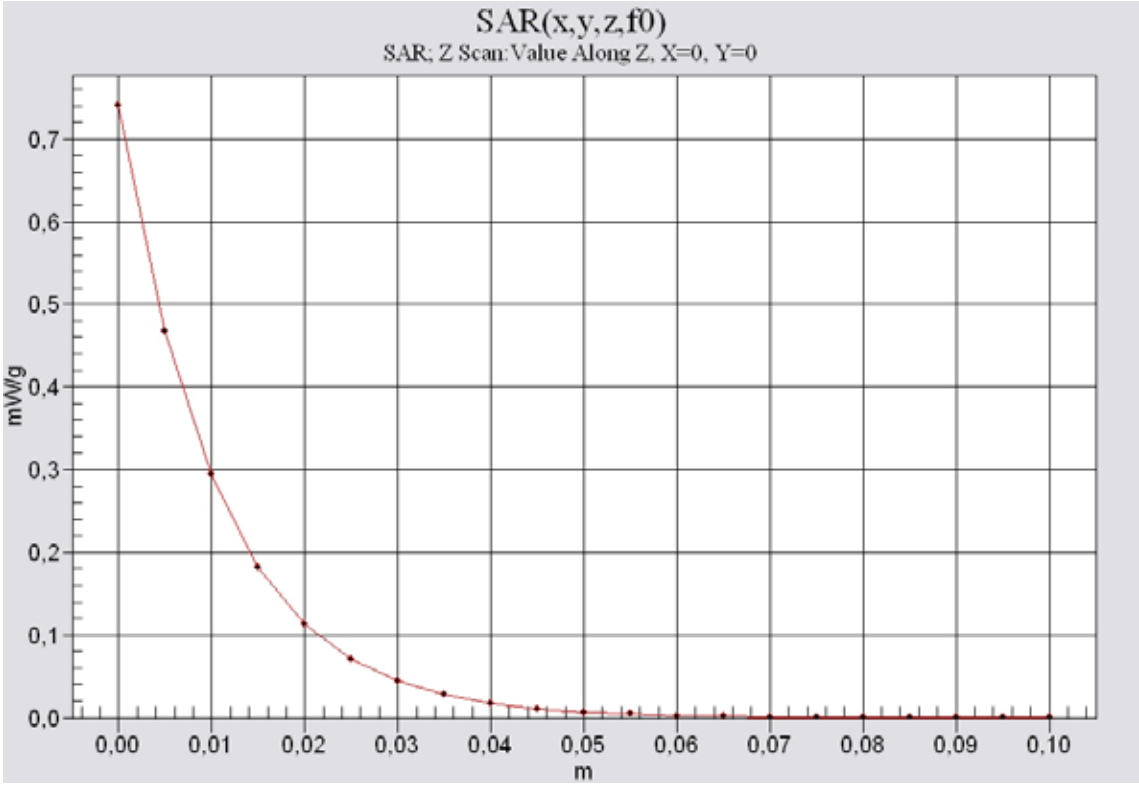

1900 head

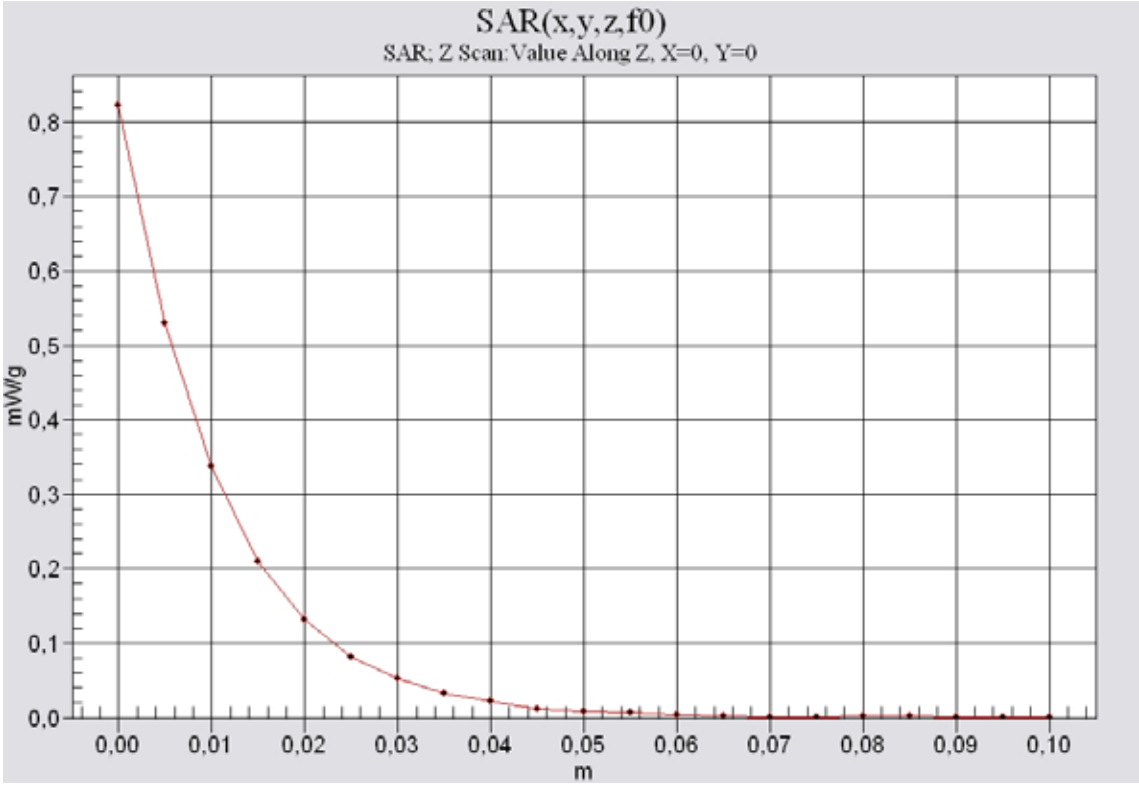

1900 body

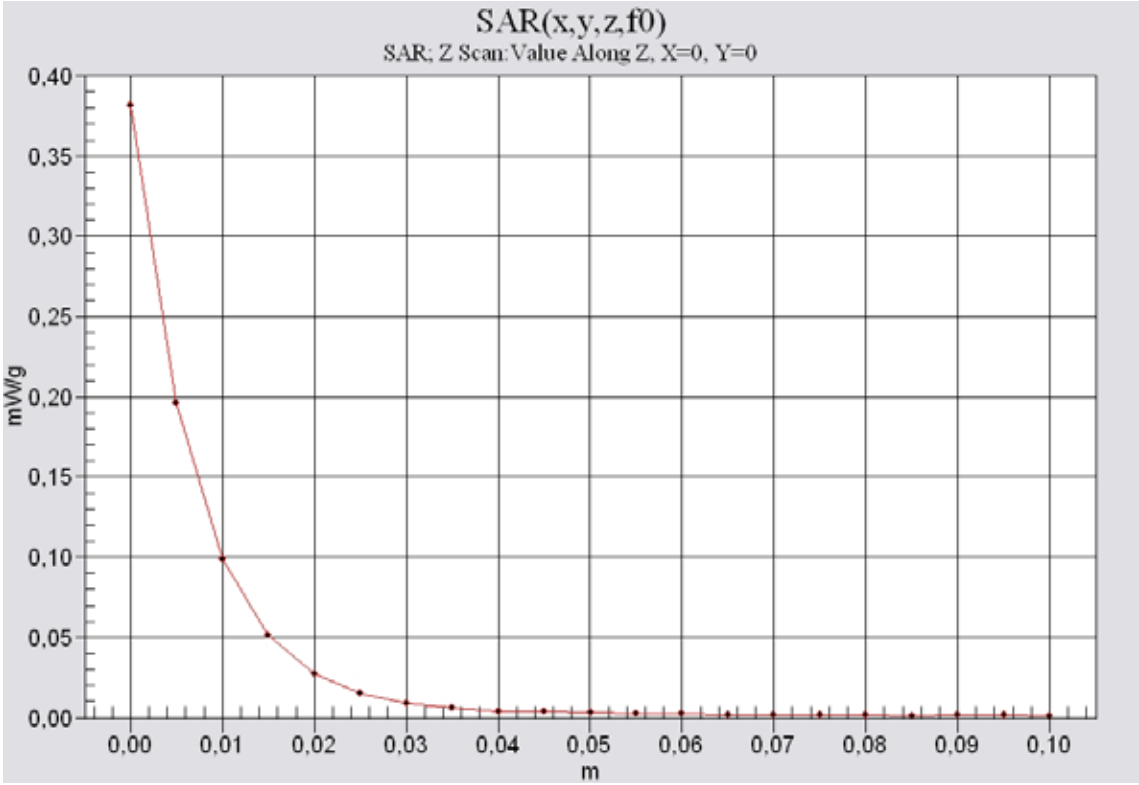

2450 head

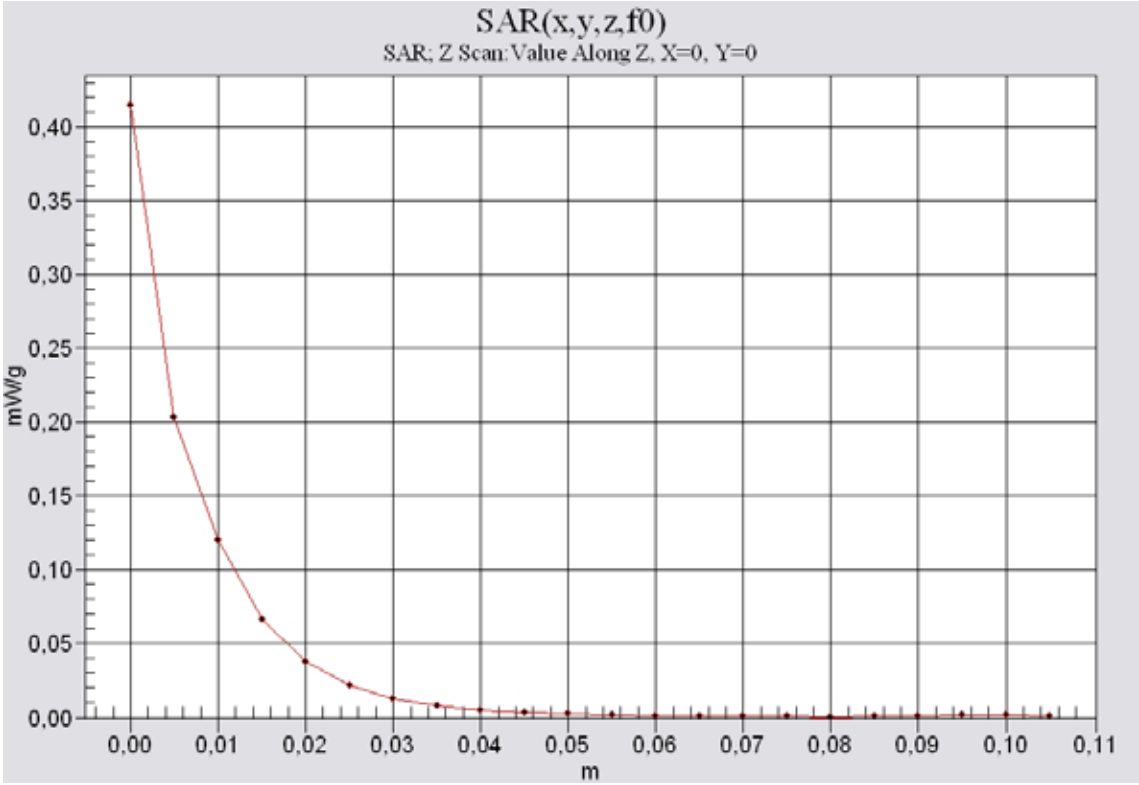

2450 body

Annex B.8: Liquid depth

Photo 1: Liquid depth 850 MHz head simulating liquid

Photo 2: Liquid depth 850 MHz body simulating liquid

Photo 3: Liquid depth 1900MHz head simulating liquid

Photo 4: Liquid depth 1900 MHz body simulating liquid

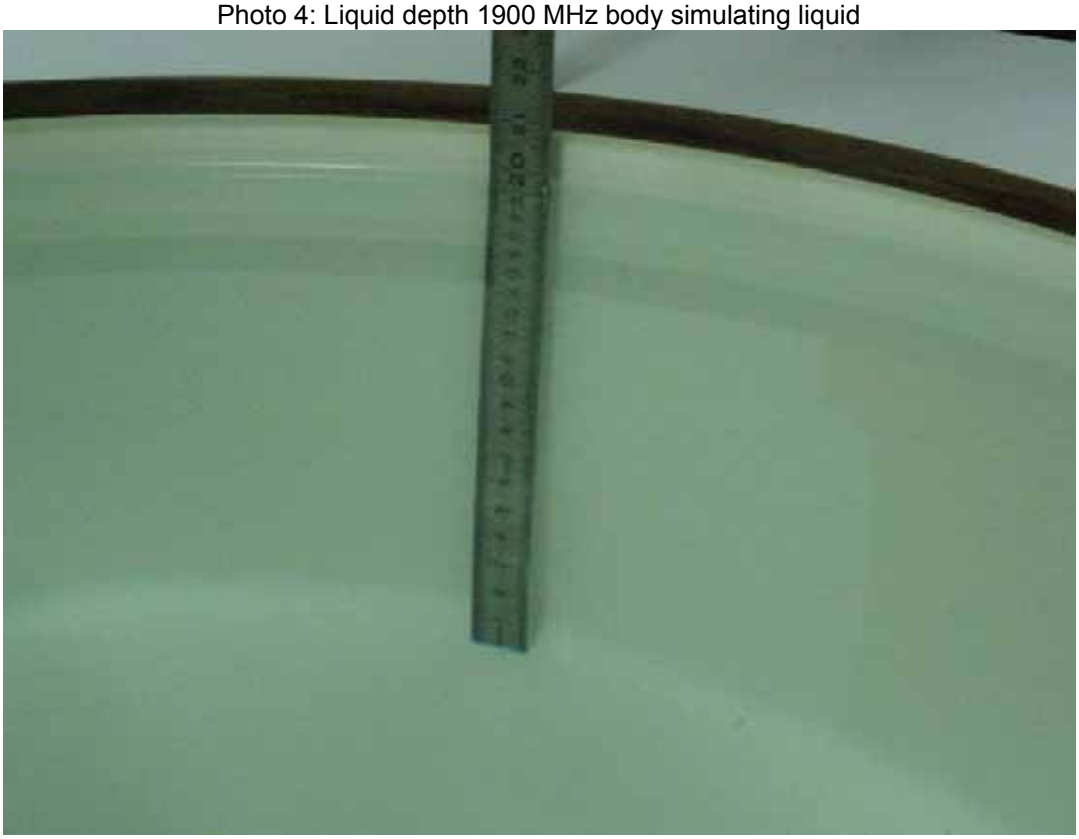

Photo 5: Liquid depth 2450MHz head simulating liquid

Photo 6: Liquid depth 2450 MHz body simulating liquid

Annex C: Photo documentation

Photo 1: Measurement System DASY 4

Photo 2: DUT - front view

Photo 3: DUT - side view

Photo 4: DUT - rear view

Photo 5: DUT - rear view (open)

Photo 6: DUT - rear view (open) without battery

Photo 7: DUT - label

Photo 8: Battery

Photo 9: Test position left hand touched

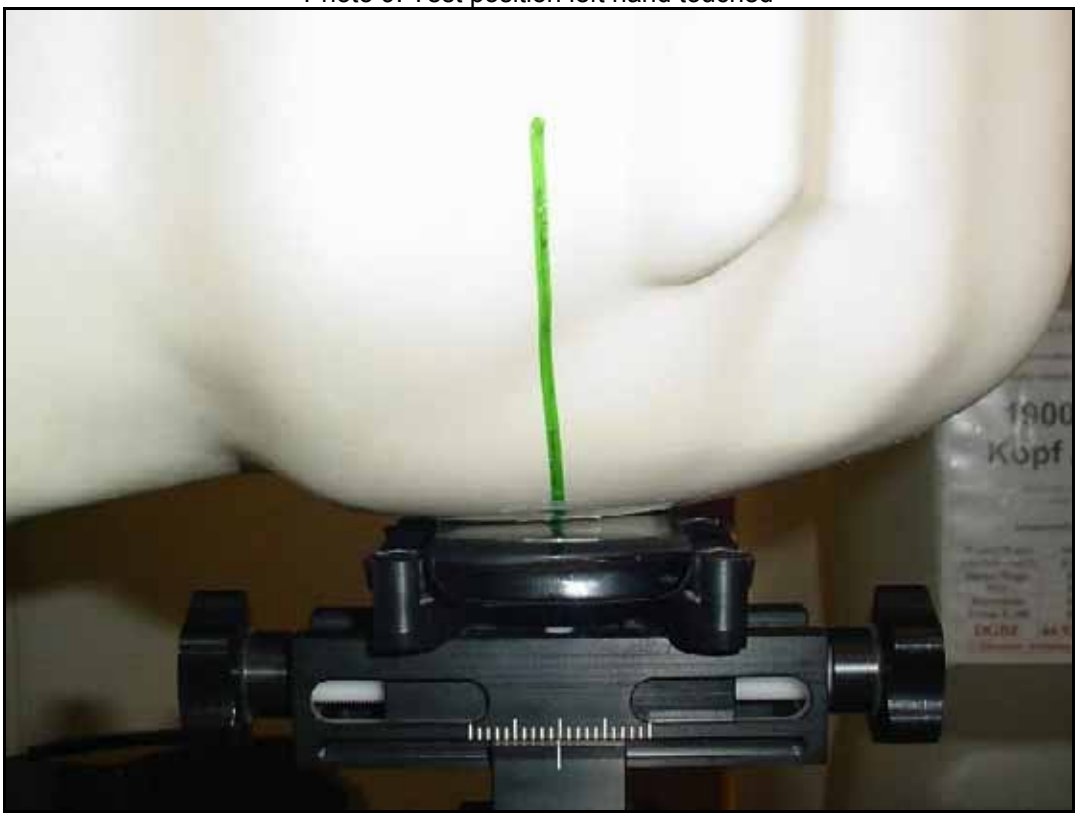

Photo 10: Test position left hand touched

Photo 11: Test position left hand touched

Photo 12: Test position left hand tilted 15°

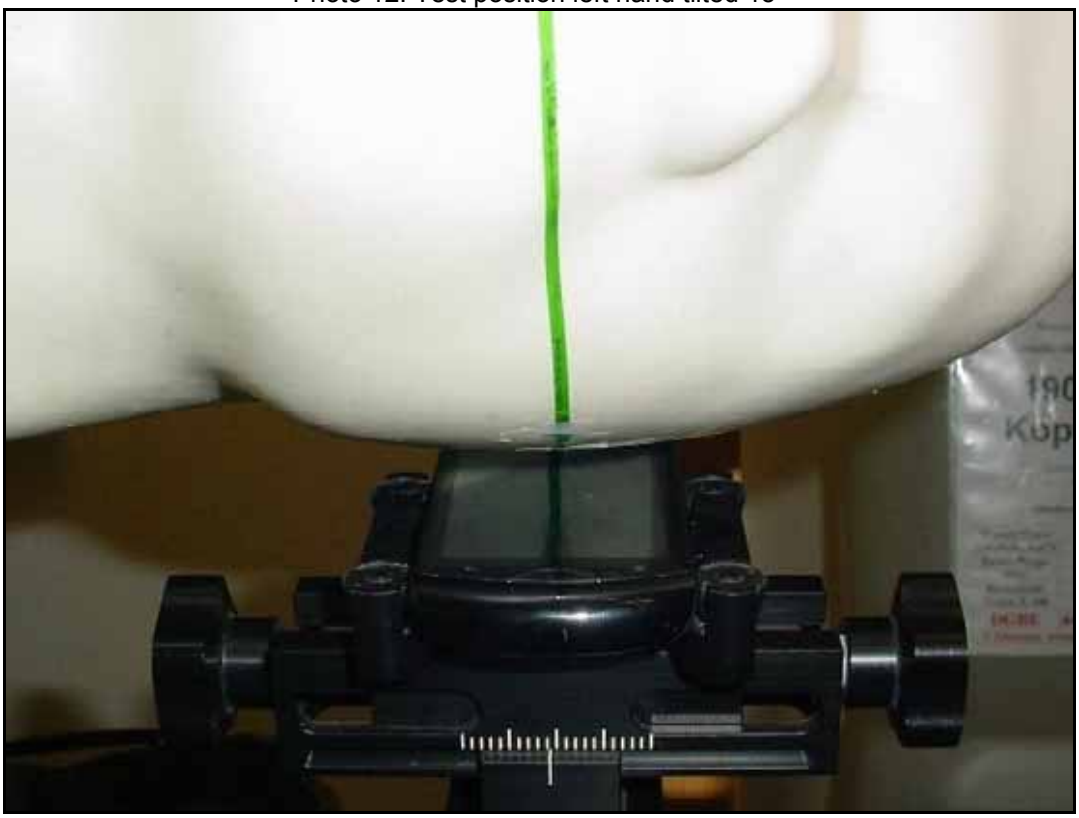

Photo 13: Test position left hand tilted 15°

Photo 14: Test position right hand touched

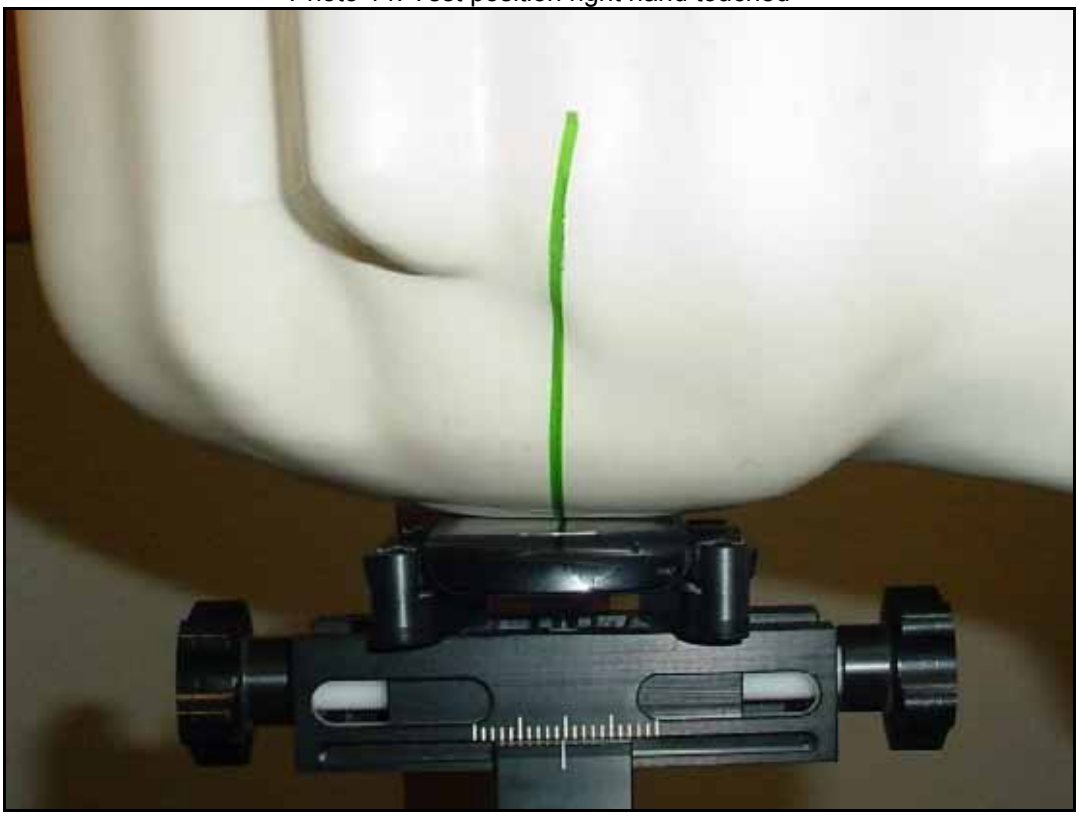

Photo 15: Test position right hand touched

Photo 16: Test position right hand touched

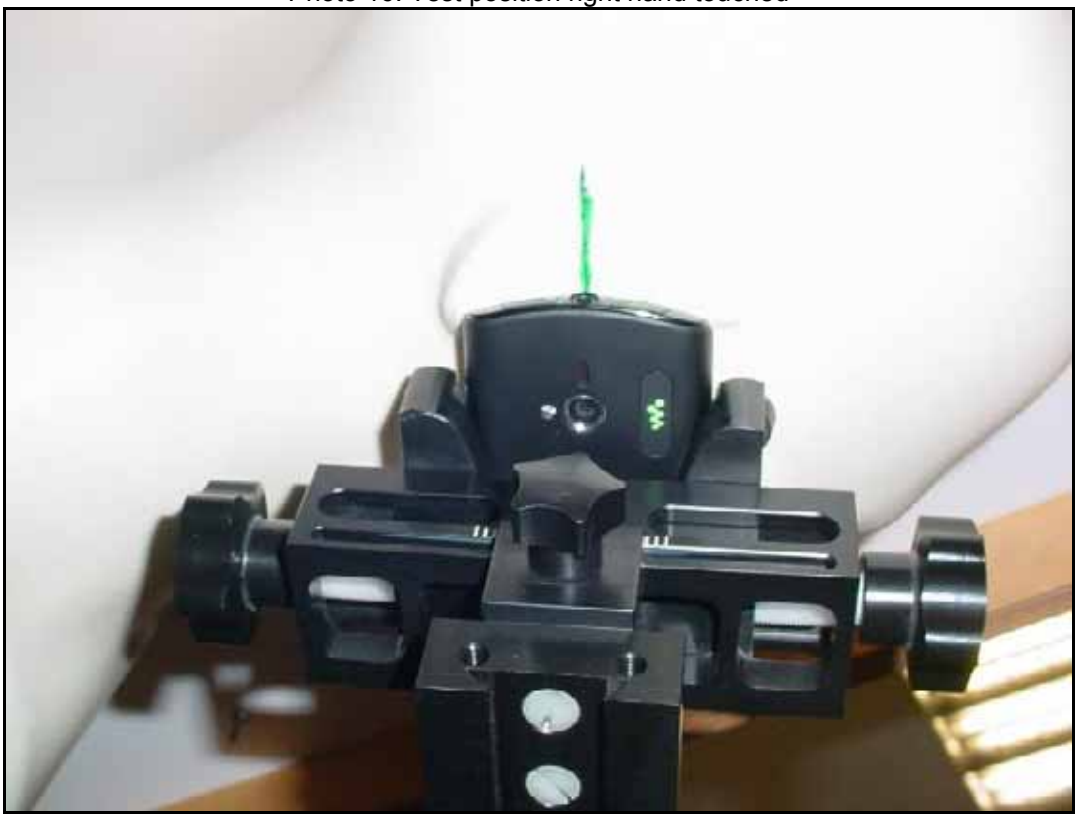

Photo 17: Test position right hand tilted 15°

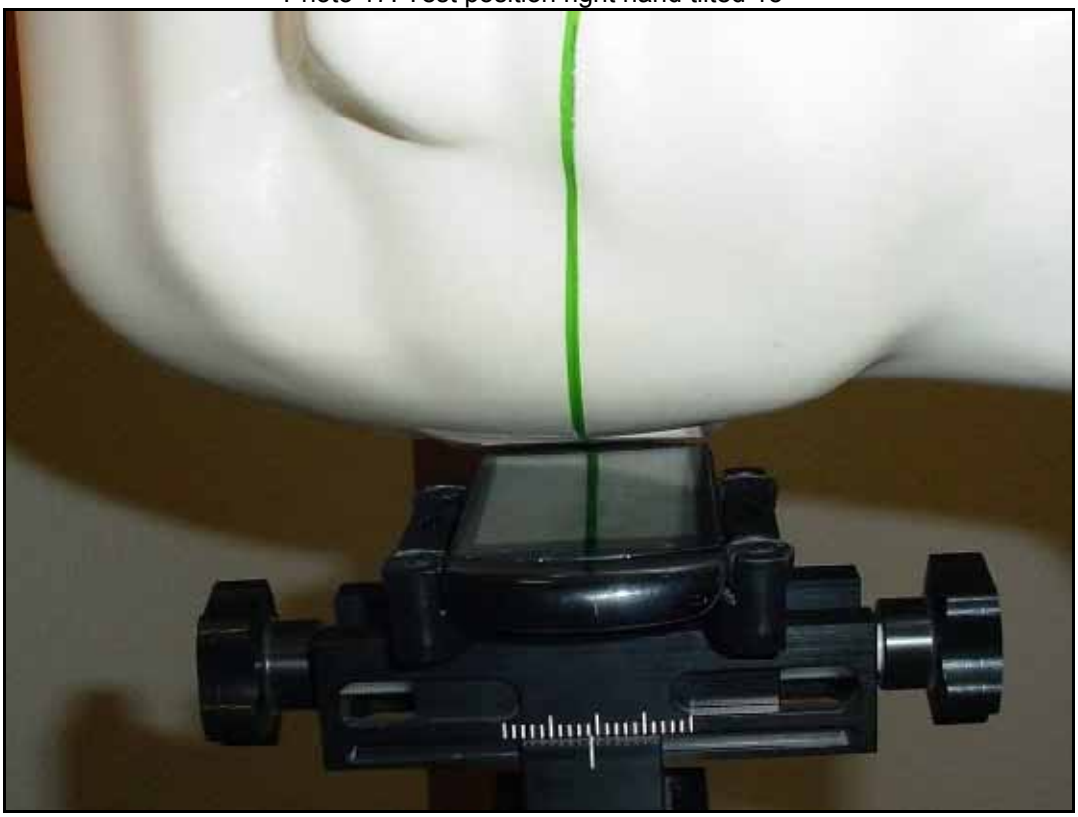

Photo 18: Test position right hand tilted 15°

Photo 19: Test position body worn front side with 10mm distance

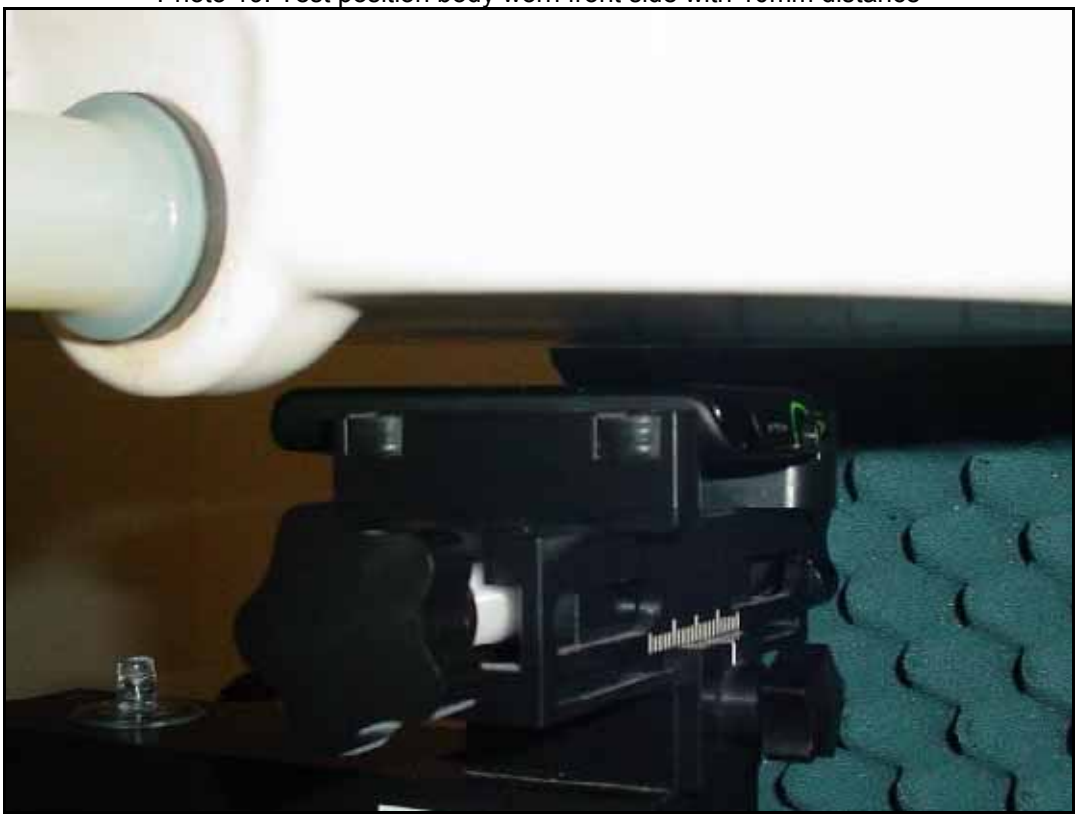

Photo 20: Test position body worn rear side with 10mm distance

Photo 21: Test position body worn left side with 10mm distance

Photo 22: Test position body worn right side with 10mm distance

Photo 23: Test position body worn top side with 10mm distance

Photo 24: Test position body worn bottom side with 10mm distance

Photo 25: Test position body worn rear side with 15mm distance

Annex D: RF Technical Brief Cover Sheet acc. to RSS-102 Annex A

1. COMPANY NUMBER: 4170B

2. MODEL NUMBER: A3880123

3. MANUFACTURER: **Sony Ericsson Mobile Communications AB**

4. TYPE OF EVALUATION:

(a) SAR Evaluation: Device used in the Vicinity of the Human Head
- Multiple transmitters: Yes ☒ No ☐
- Evaluated against exposure limits: General Public Use ☒ Controlled Use ☐
- Duty cycle used in evaluation: 12.5 %
- Standard used for evaluation: RSS-102 Issue 4 (2010-03)
- SAR value: **1.150 W/kg**. Measured ☒ Computed ☐ Calculated ☐

(b) SAR Evaluation: Body-worn Device
- Multiple transmitters: Yes ☒ No ☐
- Evaluated against exposure limits: General Public Use ☒ Controlled Use ☐
- Duty cycle used in evaluation: 50 %
- Standard used for evaluation: RSS-102 Issue 4 (2010-03)
- SAR value: **1.190 W/kg**. Measured ☒ Computed ☐ Calculated ☐

Annex D.9: Declaration of RF Exposure Compliance

ATTESTATION: I attest that the information provided in Annex D: is correct; that a Technical Brief was prepared and the information it contains is correct; that the device evaluation was performed or supervised by me; that applicable measurement methods and evaluation methodologies have been followed and that the device meets the SAR and/or RF exposure limits of RSS-102.

Signature: Thomas Vogler Date: **2011-08-18**

NAME : **Thomas Vogler**

TITLE : Dipl.-Ing. (FH)

COMPANY : CETECOM ICT Services GmbH

Annex E: Calibration parameters

Calibration parameters are described in the additional document :

Appendix to test report no. 1-2977-79-02/11
Calibration data, Phantom certificate
and detail information of the DASY4 System

Annex F: Document History

Version	Applied Changes	Date of Release
	Initial Release	2011-08-18

Annex G: Further Information

Glossary

DUT - Device under Test
EUT - Equipment under Test
FCC - Federal Communication Commission
FCC ID - Company Identifier at FCC
HW - Hardware
IC - Industry Canada
Inv. No. - Inventory number
N/A - not applicable
SAR - Specific Absorption Rate
S/N - Serial Number
SW - Software