CETECOM ICT Services
consulting - testing - certification

TEST REPORT

Test Report No.: 1-2977/11-100-03

Testing Laboratory

CETECOM ICT Services GmbH
Untertürkheimer Straße 6 – 10
66117 Saarbrücken/Germany
Phone: + 49 681 5 98 - 0
Fax: + 49 681 5 98 - 9075
Internet: http://www.cetecom.com
e-mail: ict@cetecom.com

Accredited Test Laboratory:
The testing laboratory (area of testing) is accredited according to DIN EN ISO/IEC 17025 (2005) by the Deutsche Akkreditierungsstelle GmbH (DAkkS)
The accreditation is valid for the scope of testing procedures as stated in the accreditation certificate with the registration number: D-PL-12076-01-01

Applicant

Sony Ericsson Mobile Communications AB
Nya Vattentornet
22188 Lund/SWEDEN

Phone: +46 46 19 30 00

Contact: Håkan Sjöberg
e-mail: hakan.sjoberg@sonyericsson.com
Phone: +46 46 19 35 59
Fax: +46 46 19 32 95

Manufacturer

Sony Ericsson Mobile Communications AB
Nya Vattentornet
22188 Lund/SWEDEN

Test Standard/s

IEEE 1528-2003	Recommended Practice for Determining the Peak Spatial-Average Specific Absorption Rate (SAR)in the Human Head from Wireless Communications Devices: Measurement Techniques
OET Bulletin 65 Supplement C	Evaluating Compliance with FCC Guidelines for Human Exposure to Radiofrequency Electromagnetic Fields
RSS-102 Issue 4	Radio Frequency Exposure Compliance of Radiocommunication Apparatus (All Frequency Bands)

For further applied test standards please refer to section 3 of this test report.

Test Item

Kind of test item:	Mobile Phone
Device type:	portable device
Model name:	**AAD-3880136-BV**
S/N serial number:	CB511VCC34 / CB511VCBXB
FCC-ID:	PY7A3880136
IC:	4170B-A3880136
IMEI-Number:	00440214-448319-9 / 00440214-448265-4 (for WLAN)
Hardware status:	AP1
Software status:	6.0.A.0.448 / ETS:s_atp_nozomi_0_0_ (for WLAN)
Frequency:	see technical details
Antenna:	integrated antenna
Battery option:	Integrated battery
Accessories:	Stereo headset
Test sample status:	identical prototype
Exposure category:	general population / uncontrolled environment

This test report is electronically signed and valid without handwriting signature. For verification of the electronic signatures, the public keys can be requested at the testing laboratory.

Test Report authorised:

2011-12-12 Thomas Vogler
Senior Testing Manager

Test performed:

2011-12-12 Oleksandr Hnatovskiy
Testing Manager

1 Table of contents

1 Table of contents 2

2 General information 4

2.1 Notes and disclaimer 4
2.2 Application details 4
2.3 Statement of compliance 4
2.4 Technical details 5

3 Test standards/ procedures references 6

3.1 RF exposure limits 7

4 Summary of Measurement Results 8

5 Test Environment 8

6 Test Set-up 9

6.1 Measurement system 9
6.1.1 System Description 9
6.1.2 Test environment 10
6.1.3 Probe description 10
6.1.4 Phantom description 11
6.1.5 Device holder description 11
6.1.6 Scanning procedure 12
6.1.7 Spatial Peak SAR Evaluation 13
6.1.8 Data Storage and Evaluation 14
6.1.9 Tissue simulating liquids: dielectric properties 16
6.1.10 Tissue simulating liquids: parameters 17
6.1.11 Measurement uncertainty evaluation for SAR test 18
6.1.12 Measurement uncertainty evaluation for system validation 19
6.1.13 System validation 20
6.1.14 Validation procedure 21

7 Detailed Test Results 22

7.1 Conducted power measurements 22
7.1.1 Conducted power measurements GSM 850 MHz 22
7.1.2 Conducted power measurements GSM 1900 MHz 23
7.1.3 Justification of SAR measurements in GSM mode 23
7.1.4 Conducted power measurements WCDMA FDD V (850 MHz) 24
7.1.5 Test-set-up information for WCDMA / HSPDA / HSUPA 25
7.1.6 Conducted power measurements WLAN 2.4 GHz 29
7.1.7 Multiple Transmitter Information 29
7.1.8 Mobile hotspot SAR measurement positions 30
7.2 SAR test results 31
7.2.1 Results overview 31
7.2.2 General description of test procedures 35

8 Test equipment and ancillaries used for tests 36

9 Observations 36

Annex A: System performance verification 37

Annex B: DASY4 measurement results 46

Annex B.1: GSM 850MHz head 46
Annex B.2: GSM 850MHz body 58

Annex B.3: GSM 1900MHz head 68
Annex B.4: GSM 1900MHz body 80
Annex B.5: WCDMA FDD V 835MHz head....90
Annex B.6: WCDMA FDD V 835MHz body 102
Annex B.7: WLAN 2450MHz head....116
Annex B.8: WLAN 2450MHz body....130
Annex B.9: Z-axis scan....141
Annex B.10: Liquid depth....144

Annex C: Photo documentation....147

Annex D: RF Technical Brief Cover Sheet acc. to RSS-102 Annex A 148

Annex D.11: Declaration of RF Exposure Compliance....148

Annex E: Calibration parameters....149

Annex F: Document History....149

Annex G: Further Information 149

2 General information

2.1 Notes and disclaimer

The test results of this test report relate exclusively to the test item specified in this test report. CETECOM ICT Services GmbH does not assume responsibility for any conclusions and generalisations drawn from the test results with regard to other specimens or samples of the type of the equipment represented by the test item. The test report may only be reproduced or published in full. Reproduction or publication of extracts from the report requires the prior written approval of CETECOM ICT Services GmbH.
This test report is electronically signed and valid without handwriting signature. For verification of the electronic signatures, the public keys can be requested at the testing laboratory.
The testing service provided by CETECOM ICT Services GmbH has been rendered under the current "General Terms and Conditions for CETECOM ICT Services GmbH".
CETECOM ICT Services GmbH will not be liable for any loss or damage resulting from false, inaccurate, inappropriate or incomplete product information provided by the customer.
Under no circumstances does the CETECOM ICT Services GmbH test report include any endorsement or warranty regarding the functionality, quality or performance of any other product or service provided.
Under no circumstances does the CETECOM ICT Services GmbH test report include or imply any product or service warranties from CETECOM ICT Services GmbH, including, without limitation, any implied warranties of merchantability, fitness for purpose, or non-infringement, all of which are expressly disclaimed by CETECOM ICT Services GmbH.
All rights and remedies regarding vendor’s products and services for which CETECOM ICT Services GmbH has prepared this test report shall be provided by the party offering such products or services and not by CETECOM ICT Services GmbH.
In no case this test report can be considered as a Letter of Approval.

2.2 Application details

Date of receipt of order:	2011-11-23
Date of receipt of test item:	2011-11-25
Start of test:	2011-11-25
End of test:	2011-12-08
Person(s) present during the test:	

2.3 Statement of compliance

The SAR values found for the AAD-3880136-BV Mobile Phone are below the maximum recommended levels of 1.6 W/Kg as averaged over any 1 g tissue according to the FCC rule §2.1093, the ANSI/IEEE C 95.1:1999, the NCRP Report Number 86 for uncontrolled environment, according to the Health Canada’s Safety Code 6 and the Industry Canada Radio Standards Specification RSS-102 for General Population/Uncontrolled exposure.
According to October 2010 TCB Workshop for body worn operation in WLAN hot spot mode this device has been tested with 10 mm distance to the phantom.

2.4 Technical details

Band tested for this test report	Technology	Frequency band	Lowest transmit frequency/MHz	Highest transmit frequency/MHz	Lowest receive Frequency/MHz	Highest receive Frequency/MHz	Kind of modulation	Power Class	Tested power control level	GPRS/EGPRS mobile station class	GPRS/EGPRS multislot class	(E)GPRS voice mode or DTM	Test channel low	Test channel middle	Test channel high	Maximum output power/dBm)*
☐	GSM	GSM	880.2	914.8	925.2	959.8	GMSK 8-PSK	4 E2	5	B	12	no	975	37	124	33.3
☐	GSM	DCS	1710.2	1784.8	1805.2	1879.8	GMSK 8-PSK	1 E2	0	B	12	no	512	698	885	30.5
☒	GSM	cellular	824.2	848.8	869.2	893.8	GMSK 8-PSK	4 E2	5	B	12	no	128	190	251	33.3
☒	GSM	PCS	1850.2	1909.8	1930.2	1989.8	GMSK 8-PSK	1 E2	0	B	12	no	512	661	810	30.1
☐	UMTS	FDD I	1922.4	1977.6	2112.4	2167.6	QPSK	3	max	--	--	--	9612	9750	9888	24.6
☒	UMTS	FDD V	826.4	846.6	871.4	891.6	QPSK	3	max	--	--	--	4132	4182	4233	25.0
☐	UMTS	FDD VI	832.4	837.6	875	885	QPSK	3	max	--	--	--	4162	4175	4188	25.0
☐	UMTS	FDD IX	1752.4	1782.4	1847.4	1877.4	QPSK	3	max	--	--	--	8762	8837	8912	24.8
☐	UMTS	FDD XIX	832.4	842.6	877.4	887.6	QPSK	3	max	--	--	--	312	335	363	24.8
☐	WLAN	ISM	2412	2472	2412	2472	CCK OFDM	--	max	--	--	--	1	7	13	14.1
☒	WLAN US	ISM	2412	2462	2412	2462	CCK OFDM	--	max	--	--	--	1	6	11	14.1
☐	BT	ISM	2402	2480	2402	2480	GFSK	3	max	--	--	--	0	39	78	6.7

)*: slotted peak power for GSM, averaged max. RMS power for UMTS, WLAN and BT.

3 Test standards/ procedures references

Test Standard	Version	Test Standard Description
IEEE 1528-2003	2003-04	Recommended Practice for Determining the Peak Spatial-Average Specific Absorption Rate (SAR) in the Human Head from Wireless Communications Devices: Measurement Techniques
OET Bulletin 65 Supplement C	1997-01 2001-01	Evaluating Compliance with FCC Guidelines for Human Exposure to Radiofrequency Electromagnetic Fields
RSS-102 Issue 4	2010-03	Radio Frequency Exposure Compliance of Radiocommunication Apparatus (All Frequency Bands)
Canada's Safety Code No. 6	99-EHD-237	Limits of Human Exposure to Radiofrequency Electromagnetic Fields in the Frequency Range from 3 kHz to 300 GHz
IEEE Std. C95-3	2002	IEEE Recommended Practice for the Measurement of Potentially Hazardous Electromagnetic Fields – RF and Microwave
IEEE Std. C95-1	2005	IEEE Standard for Safety Levels with Respect to Human Exposure to Radio Frequency Electromagnetic Fields, 3 kHz to 300 GHz.
IEC 62209-2	2010	Human exposure to radio frequency fields from hand-held and bodymounted wireless communication devices. Human models, instrumentation, and procedures. Procedure to determine the specific absorption rate (SAR) for wireless communication devices used in close proximity to the human body (frequency range of 30 MHz to 6 GHz)

FCC KDBs:

FCC OET SAR Measurement Procedures for 802.11 a/b/g Transmitters, May, 2007.

FCC OET SAR Evaluation Considerations for Handsets with Multiple Transmitters & Antennas, September, 2008.

FCC OET SAR Test Reduction Procedure for GSM/GPRS/EDGE, December, 2008.

FCC OET SAR Probe Calibration and System Verification Considerations for Measurements at 150 MHz – 3 GHz, January, 2007.

FCC OET RF Exposure Procedures for Mobile and Portable Devices, and Equipment Authorization Policies, November, 2009.

FCC OET SAR Measurements Procedures for 3G Devices, October, 2007.

Dipole Requirements for SAR System Validation and Verification, November, 2009.

3.1 RF exposure limits

Human Exposure	Uncontrolled Environment General Population	Controlled Environment Occupational
Spatial Peak SAR* (Brain and Trunk)	**1.60 mW/g**	8.00 mW/g
Spatial Average SAR** (Whole Body)	0.08 mW/g	0.40 mW/g
Spatial Peak SAR*** (Hands/Feet/Ankle/Wrist)	4.00 mW/g	20.00 mW/g

Table 1: RF exposure limits

The limit applied in this test report is shown in bold letters

Notes:

* The Spatial Peak value of the SAR averaged over any 1 gram of tissue (defined as a tissue volume in the shape of a cube) and over the appropriate averaging time

** The Spatial Average value of the SAR averaged over the whole body.

*** The Spatial Peak value of the SAR averaged over any 10 grams of tissue (defined as a tissue volume in the shape of a cube) and over the appropriate averaging time.

Uncontrolled Environments are defined as locations where there is the exposure of individuals who have no knowledge or control of their exposure.

Controlled Environments are defined as locations where there is exposure that may be incurred by persons who are aware of the potential for exposure, (i.e. as a result of employment or occupation).

4 Summary of Measurement Results

☒	**No deviations from the technical specifications ascertained**	
☐	Deviations from the technical specifications ascertained	
Maximum SAR value measured for head (1 g)		**0.869 W/kg**
Maximum SAR value measured for body (1 g)		**1.100 W/kg**

5 Test Environment

Ambient temperature: 20 – 24 °C
Tissue Simulating liquid: 20 – 24 °C

Relative humidity content: 40 – 50 %
Air pressure: not relevant for this kind of testing
Power supply: 230 V / 50 Hz

Exact temperature values for each test are shown in the table(s) under 2.5. and/or on the measurement plots.

6 Test Set-up

6.1 Measurement system

6.1.1 System Description

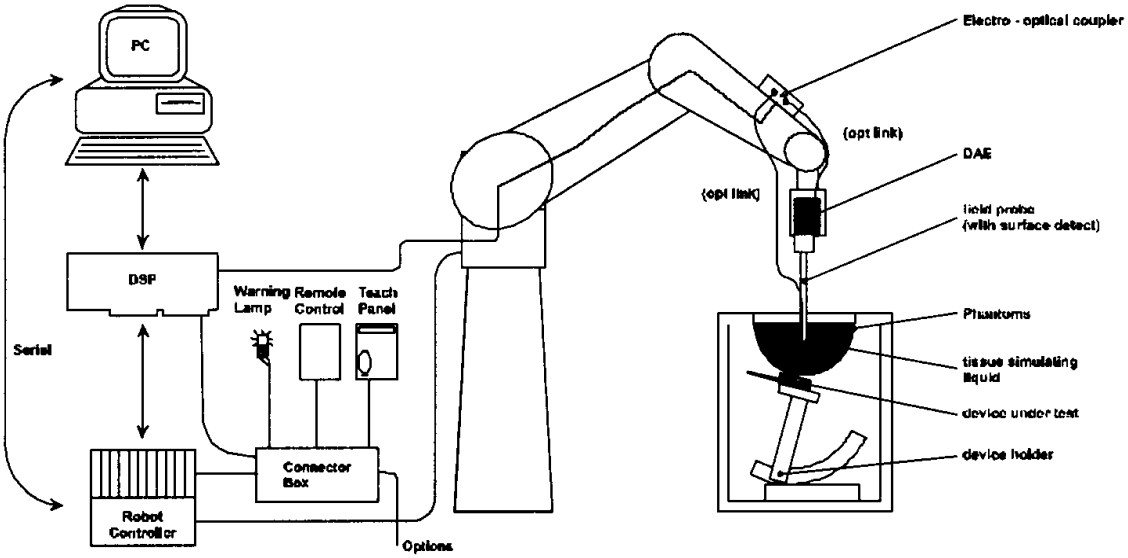

- The DASY4 system for performing compliance tests consists of the following items:

- A standard high precision 6-axis robot (Stäubli RX family) with controller and software. An arm extension for accommodating the data acquisition electronics (DAE).

- A dosimetric probe, i.e. an isotropic E-field probe optimized and calibrated for usage in tissue simulating liquid. The probe is equipped with an optical surface detector system.

- A data acquisition electronic (DAE) which performs the signal amplification, signal multiplexing, AD-conversion, offset measurements, mechanical surface detection, collision detection, etc. The unit is battery powered with standard or rechargeable batteries. The signal is optically transmitted to the EOC.
- A unit to operate the optical surface detector which is connected to the EOC.
- The Electro-Optical Coupler (EOC) performs the conversion from the optical into a digital electric signal of the DAE. The EOC is connected to the DASY4 measurement server.
- The DASY4 measurement server, which performs all real-time data evaluation for field measurements and surface detection, controls robot movements and handles safety operation. A computer operating Windows 2000
- DASY4 software and SEMCAD data evaluation software.
- Remote control with teach panel and additional circuitry for robot safety such as warning lamps, etc.
- The generic twin phantom enabling the testing of left-hand and right-hand usage.
- The device holder for handheld mobile phones.
- Tissue simulating liquid mixed according to the given recipes.
- System validation dipoles allowing to validate the proper functioning of the system.

6.1.2 Test environment

The DASY4 measurement system is placed at the head end of a room with dimensions:
5 x 2.5 x 3 m³, the SAM phantom is placed in a distance of 75 cm from the side walls and 1.1m from the rear wall. Above the test system a 1.5 x 1.5 m² array of pyramid absorbers is installed to reduce reflections from the ceiling.
Picture 1 of the photo documentation shows a complete view of the test environment.
The system allows the measurement of SAR values larger than 0.005 mW/g.

6.1.3 Probe description

Isotropic E-Field Probe ET3DV6 for Dosimetric Measurements

Technical data according to manufacturer information	
Construction	Symmetrical design with triangular core Built-in optical fiber for surface detection system Built-in shielding against static charges PEEK enclosure material (resistant to organic solvents, e.g., glycolether)
Calibration	In air from 10 MHz to 2.5 GHz In head tissue simulating liquid (HSL) at 900 (800-1000) MHz and 1.8 GHz (1700-1910 MHz) (accuracy ± 9.5%; k=2) Calibration for other liquids and frequencies upon request
Frequency	10 MHz to 3 GHz (dosimetry); Linearity: ± 0.2 dB (30 MHz to 3 GHz)
Directivity	± 0.2 dB in HSL (rotation around probe axis) ± 0.4 dB in HSL (rotation normal to probe axis)
Dynamic range	5 µW/g to > 100 mW/g; Linearity: ± 0.2 dB
Optical Surface Detection	± 0.2 mm repeatability in air and clear liquids over diffuse reflecting surfaces (ET3DV6 only)
Dimensions	Overall length: 330 mm Tip length: 16 mm Body diameter: 12 mm Tip diameter: 6.8 mm Distance from probe tip to dipole centers: 2.7 mm
Application	General dosimetry up to 3 GHz Compliance tests of mobile phones Fast automatic scanning in arbitrary phantoms (ET3DV6)

6.1.4 Phantom description

The used SAM Phantom meets the requirements specified in Edition 01-01 of Supplement C to OET Bulletin 65 for Specific Absorption Rate (SAR) measurements.
The phantom consists of a fibreglass shell integrated in a wooden table. It allows left-hand and right-hand head as well as body-worn measurements with a maximum liquid depth of 18 cm in head position and 22 cm in planar position (body measurements). The thickness of the Phantom shell is 2 mm +/- 0.1 mm.

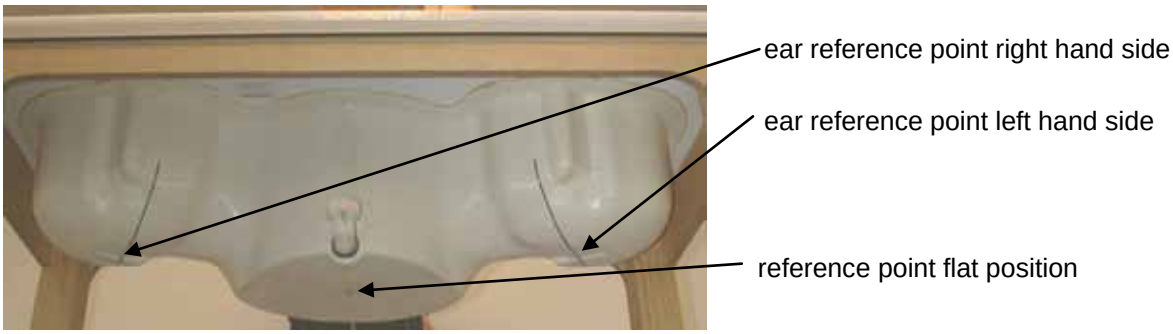

6.1.5 Device holder description

The DASY4 device holder has two scales for device rotation (with respect to the body axis) and the device inclination (with respect to the line between the ear openings). The plane between the ear openings and the mouth tip has a rotation angle of 65°. The bottom plate contains three pair of bolts for locking the device holder. The device holder positions are adjusted to the standard measurement positions in the three sections. This device holder is used for standard mobile phones or PDA's only. If necessary an additional support of polystyrene material is used.

Larger DUT's (e.g. notebooks) cannot be tested using this device holder. Instead a support of bigger polystyrene cubes and thin polystyrene plates is used to position the DUT in all relevant positions to find and measure spots with maximum SAR values.
Therefore those devices are normally only tested at the flat part of the SAM.

6.1.6 Scanning procedure

- The DASY4 installation includes predefined files with recommended procedures for measurements and validation. They are read-only document files and destined as fully defined but unmeasured masks. All test positions (head or body-worn) are tested with the same configuration of test steps differing only in the grid definition for the different test positions.

- The „reference“ and „drift“ measurements are located at the beginning and end of the batch process. They measure the field drift at one single point in the liquid over the complete procedure. The indicated drift is mainly the variation of the DUT’s output power and should vary max. +/- 5 %.

- The „surface check“ measurement tests the optical surface detection system of the DASY4 system by repeatedly detecting the surface with the optical and mechanical surface detector and comparing the results. The output gives the detecting heights of both systems, the difference between the two systems and the standard deviation of the detection repeatability. Air bubbles or refraction in the liquid due to separation of the sugar-water mixture gives poor repeatability (above ± 0.1mm). To prevent wrong results tests are only executed when the liquid is free of air bubbles. The difference between the optical surface detection and the actual surface depends on the probe and is specified with each probe. (It does not depend on the surface reflectivity or the probe angle to the surface within ± 30°.)

- The „area scan“ measures the SAR above the DUT or verification dipole on a parallel plane to the surface. It is used to locate the approximate location of the peak SAR with 2D spline interpolation. The robot performs a stepped movement along one grid axis while the local electrical field strenth is measured by the probe. The probe is touching the surface of the SAM during acquisition of measurement values. The standard scan uses large grid spacing for faster measurement. Standard grid spacing for head measurements is 15 mm in x- and y- dimension. If a finer resolution is needed, the grid spacing can be reduced. Grid spacing and orientation have no influence on the SAR result. For special applications where the standard scan method does not find the peak SAR within the grid, e.g. mobile phones with flip cover, the grid can be adapted in orientation. Results of this coarse scan are shown in annex 2.

- A „7x7x7 zoom scan” measures the field in a volume around the 2D peak SAR value acquired in the previous „coarse“ scan. This is a fine 7x7 grid where the robot additionally moves the probe in 7 steps along the z-axis away from the bottom of the Phantom. Grid spacing for the cube measurement is 5 mm in x and y-direction and 5 mm in z-direction. DASY4 is also able to perform repeated zoom scans if more than 1 peak is found during area scan. In this document, the evaluated peak 1g and 10g averaged SAR values are shown in the 2D-graphics in annex 2. Test results relevant for the specified standard (see section 3) are shown in table form in section 7.

- A Z-axis scan measures the total SAR value at the x-and y-position of the maximum SAR value found during the cube 7x7x7 scan. The probe is moved away in z-direction from the bottom of the SAM phantom in 2mm steps. This measurement shows the continuity of the liquid and can - depending in the field strength – also show the liquid depth. A z-axis scan of the measurement with maximum SAR value is shown in annex 2.

6.1.7 Spatial Peak SAR Evaluation

The spatial peak SAR - value for 1 and 10 g is evaluated after the Cube measurements have been done. The basis of the evaluation are the SAR values measured at the points of the fine cube grid consisting of 7 x 7 x 7 points. The algorithm that finds the maximal averaged volume is separated into three different stages.

- The data between the dipole center of the probe and the surface of the phantom are extrapolated. This data cannot be measured since the center of the dipole is 2.7 mm away from the tip of the probe and the distance between the surface and the lowest measuring point is about 1 mm (see probe calibration sheet). The extrapolated data from a cube measurement can be visualized by selecting ‘Graph Evaluated’.

- The maximum interpolated value is searched with a straight-forward algorithm. Around this maximum the SAR - values averaged over the spatial volumes (1g or 10 g) are computed using the 3d-spline interpolation algorithm. If the volume cannot be evaluated (i.e., if a part of the grid was cut off by the boundary of the measurement area) the evaluation will be started on the corners of the bottom plane of the cube.

- All neighboring volumes are evaluated until no neighboring volume with a higher average value is found.

Extrapolation

The extrapolation is based on a least square algorithm [W. Gander, Computermathematik, p.168-180]. Through the points in the first 3 cm along the z-axis, polynomials of order four are calculated. These polynomials are then used to evaluate the points between the surface and the probe tip. The points, calculated from the surface, have a distance of 1 mm from each other.

Interpolation

The interpolation of the points is done with a 3d-Spline. The 3d-Spline is composed of three one-dimensional splines with the "Not a knot"-condition [W. Gander, Computermathematik, p.141-150] (x, y and z -direction) [Numerical Recipes in C, Second Edition, p.123ff].

Volume Averaging

At First the size of the cube is calculated. Then the volume is integrated with the trapezoidal algorithm. 8000 points (20x20x20) are interpolated to calculate the average.

Advanced Extrapolation

DASY4 uses the advanced extrapolation option which is able to compansate boundary effects on E-field probes.

6.1.8 Data Storage and Evaluation

Data Storage

The DASY4 software stores the acquired data from the data acquisition electronics as raw data (in microvolt readings from the probe sensors), together with all necessary software parameters for the data evaluation (probe calibration data, liquid parameters and device frequency and modulation data) in measurement files with the extension ".DA4". The software evaluates the desired unit and format for output each time the data is visualized or exported. This allows verification of the complete software setup even after the measurement and allows correction of incorrect parameter settings. For example, if a measurement has been performed with a wrong crest factor parameter in the device setup, the parameter can be corrected afterwards and the data can be re-evaluated.

The measured data can be visualized or exported in different units or formats, depending on the selected probe type ([V/m], [A/m], [°C], [mW/g], [mW/cm²], [dBrel], etc.). Some of these units are not available in certain situations or show meaningless results, e.g., a SAR output in a lossless media will always be zero. Raw data can also be exported to perform the evaluation with other software packages.

Data Evaluation by SEMCAD

The SEMCAD software automatically executes the following procedures to calculate the field units from the microvolt readings at the probe connector. The parameters used in the evaluation are stored in the configuration modules of the software:

Probe parameters:	- Sensitivity	$Norm_i$, a_{i0}, a_{i1}, a_{i2}
	- Conversion factor	$ConvF_i$
	- Diode compression point	Dcpi
Device parameters:	- Frequency	f
	- Crest factor	cf
Media parameters:	- Conductivity	*s*
	- Density	*r*

These parameters must be set correctly in the software. They can be found in the component documents or they can be imported into the software from the configuration files issued for the DASY4 components. In the direct measuring mode of the multimeter option, the parameters of the actual system setup are used. In the scan visualization and export modes, the parameters stored in the corresponding document files are used.

The first step of the evaluation is a linearization of the filtered input signal to account for the compression characteristics of the detector diode. The compensation depends on the input signal, the diode type and the DC-transmission factor from the diode to the evaluation electronics.

If the exciting field is pulsed, the crest factor of the signal must be known to correctly compensate for peak power. The formula for each channel can be given as:

$$V_i = U_i + U_i^2 \cdot cf/dcp_i$$

with	V_i	= compensated signal of channel i	(i = x, y, z)
	U_i	= input signal of channel i	(i = x, y, z)
	cf	= crest factor of exciting field	(DASY parameter)
	dcp_i	= diode compression point	(DASY parameter)

From the compensated input signals the primary field data for each channel can be evaluated:

E-field probes: $$E_i = (V_i / Norm_i \cdot ConvF)^{1/2}$$

H-field probes: $$H_i = (V_i)^{1/2} \cdot (a_{i0} + a_{i1}f + a_{i2}f^2)/f$$

with	V_i	= compensated signal of channel i	(i = x, y, z)
	$Norm_i$	= sensor sensitivity of channel i [mV/(V/m)^2] for E-field Probes	(i = x, y, z)
	ConvF	= sensitivity enhancement in solution	
	a_{ij}	= sensor sensitivity factors for H-field probes	
	f	= carrier frequency [GHz]	
	E_i	= electric field strength of channel i in V/m	
	H_i	= magnetic field strength of channel i in A/m	

The RSS value of the field components gives the total field strength (Hermitian magnitude):

$$E_{tot} = (E_x^2 + E_Y^2 + E_z^2)^{1/2}$$

The primary field data are used to calculate the derived field units.

$$SAR = (E_{tot}^2 \cdot s) / (r \cdot 1000)$$

with	SAR	= local specific absorption rate in mW/g
	E_{tot}	= total field strength in V/m
	s	= conductivity in [mho/m] or [Siemens/m]
	r	= equivalent tissue density in g/cm^3

Note that the density is normally set to 1 (or 1.06), to account for actual brain density rather than the density of the simulation liquid.The power flow density is calculated assuming the excitation field to be a free space field.

$$P_{pwe} = E_{tot}^2 / 3770 \quad \text{or} \quad P_{pwe} = H_{tot}^2 \cdot 37.7$$

with	P_{pwe}	= equivalent power density of a plane wave in mW/cm^2
	E_{tot}	= total electric field strength in V/m
	H_{tot}	= total magnetic field strength in A/m

6.1.9 Tissue simulating liquids: dielectric properties

The following materials are used for producing the tissue-equivalent materials.

(Liquids used for tests described in section 7. are marked with ☒) :

Ingredients (% of weight)	**Frequency (MHz)**					
frequency band	☐ 450	☒ 835	☐ 900	☐ 1800	☒ 1900	☒ 2450
Tissue Type	Head	Head	Head	Head	Head	Head
Water	38.56	41.45	40.92	52.64	54.9	62.7
Salt (NaCl)	3.95	1.45	1.48	0.36	0.18	0.5
Sugar	56.32	56.0	56.5	0.0	0.0	0.0
HEC	0.98	1.0	1.0	0.0	0.0	0.0
Bactericide	0.19	0.1	0.1	0.0	0.0	0.0
Triton X-100	0.0	0.0	0.0	0.0	0.0	36.8
DGBE	0.0	0.0	0.0	47.0	44.92	0.0

Table 2: Head tissue dielectric properties

Ingredients (% of weight)	**Frequency (MHz)**					
frequency band	☐ 450	☒ 835	☐ 900	☐ 1800	☒ 1900	☒ 2450
Tissue Type	Body	Body	Body	Body	Body	Body
Water	51.16	52.4	56.0	69.91	69.91	73.2
Salt (NaCl)	1.49	1.40	0.76	0.13	0.13	0.04
Sugar	46.78	45.0	41.76	0.0	0.0	0.0
HEC	0.52	1.0	1.21	0.0	0.0	0.0
Bactericide	0.05	0.1	0.27	0.0	0.0	0.0
Triton X-100	0.0	0.0	0.0	0.0	0.0	0.0
DGBE	0.0	0.0	0.0	29.96	29.96	26.7

Table 3: Body tissue dielectric properties

Salt: 99+% Pure Sodium Chloride
Sugar: 98+% Pure Sucrose
Water: De-ionized, 16MW+ resistivity
HEC: Hydroxyethyl Cellulose
DGBE: 99+% Di(ethylene glycol) butyl ether, [2-(2-butoxyethoxy)ethanol]
Triton X-100(ultra pure): Polyethylene glycol mono [4-(1,1,3,3-tetramethylbutyl)phenyl]ether

Note: Due to their availability body tissue simulating liquids as defined by FCC OET Bulletin 65 Supplement C are generally used for body worn SAR testing according to European standards.

6.1.10 Tissue simulating liquids: parameters

Liquid	Frequency (MHz)	Target head tissue		Measurement head tissue		Measurement date
		Permittivity	Conductivity[S/m]	Permittivity	Conductivity[S/m]	
HSL 850/900	824	41.5	0.90	42.5	0.89	2011-11-30
	837	41.5	0.90	42.4	0.91	2011-11-30
	849	41.5	0.90	42.2	0.92	2011-11-30
	900	41.5	0.97	41.5	0.97	2011-11-30
HSL 1900	1850	40.0	1.40	40.3	1.34	2011-11-28
	1880	40.0	1.40	40.2	1.36	2011-11-28
	1900	40.0	1.40	40.1	1.38	2011-11-28
	1910	40.0	1.40	40.1	1.39	2011-11-28
HSL 2450	2412	39.2	1.80	38.4	1.78	2011-11-30
	2437	39.2	1.80	38.4	1.80	2011-11-30
	2450	39.2	1.80	38.3	1.82	2011-11-30
	2462	39.2	1.80	38.3	1.83	2011-11-30

Table 4: Parameter of the head tissue simulating liquid

Liquid	Frequency (MHz)	Target body tissue		Measurement body tissue		Measurement date
		Permittivity	Conductivity[S/m]	Permittivity	Conductivity[S/m]	
M 850/900	824	55.2	0.97	55.2	0.99	2011-12-03
	837	55.2	0.97	55.1	1.00	2011-12-03
	849	55.2	0.97	55.0	1.02	2011-12-03
	900	55.0	1.05	54.5	1.07	2011-12-03
M 1900	1850	53.3	1.52	52.8	1.48	2011-12-07
	1880	53.3	1.52	52.7	1.51	2011-12-07
	1900	53.3	1.52	52.6	1.54	2011-12-07
	1910	53.3	1.52	52.6	1.55	2011-12-07
M 2450	2412	52.7	1.95	51.8	1.92	2011-12-05
	2437	52.7	1.95	51.7	1.97	2011-12-05
	2450	52.7	1.95	51.7	1.97	2011-12-05
	2462	52.7	1.95	51.7	1.99	2011-12-05

Table 5: Parameter of the body tissue simulating liquid
Note: The dielectric properties have been measured using the contact probe method at 22°C.

6.1.11 Measurement uncertainty evaluation for SAR test

The overall combined measurement uncertainty of the measurement system is ± 11.5% (K=1).
The expanded uncertainty (k=2) is assessed to be ± 23.0%
This measurement uncertainty budget is suggested by IEEE 1528-2003 and determined by Schmid & Partner Engineering AG. The breakdown of the individual uncertainties is as follows:

Error Sources	Uncertainty Value	Probability Distribution	Divi-sor	c_i 1g	c_i 10g	Standard Uncertainty 1g	Standard Uncertainty 10g	v_i^2 or v_{eff}
Measurement System								
Probe calibration	± 6.0%	Normal	1	1	1	± 6.0%	± 6.0%	∞
Axial isotropy	± 4.7%	Rectangular	√3	0.7	0.7	± 1.9%	± 1.9%	∞
Hemispherical isotropy	± 9.6%	Rectangular	√3	0.7	0.7	± 3.9%	± 3.9%	∞
Spatial resolution	± 0.0%	Rectangular	√3	1	1	± 0.0%	± 0.0%	∞
Boundary effects	± 1.0%	Rectangular	√3	1	1	± 0.6%	± 0.6%	∞
Probe linearity	± 4.7%	Rectangular	√3	1	1	± 2.7%	± 2.7%	∞
System detection limits	± 1.0%	Rectangular	√3	1	1	± 0.6%	± 0.6%	∞
Readout electronics	± 1.0%	Normal	1	1	1	± 1.0%	± 1.0%	∞
Response time	± 0.8%	Rectangular	√3	1	1	± 0.5%	± 0.5%	∞
Integration time	± 2.6%	Rectangular	√3	1	1	± 1.5%	± 1.5%	∞
RF ambient conditions	± 3.0%	Rectangular	√3	1	1	± 1.7%	± 1.7%	∞
Probe positioner	± 0.4%	Rectangular	√3	1	1	± 0.2%	± 0.2%	∞
Probe positioning	± 2.9%	Rectangular	√3	1	1	± 1.7%	± 1.7%	∞
Max. SAR evaluation	± 1.0%	Rectangular	√3	1	1	± 0.6%	± 0.6%	∞
Test Sample Related								
Device positioning	± 2.9%	Normal	1	1	1	± 2.9%	± 2.9%	145
Device holder uncertainty	± 3.6%	Normal	1	1	1	± 3.6%	± 3.6%	5
Power drift	± 5.0%	Rectangular	√3	1	1	± 2.9%	± 2.9%	∞
Phantom and Set-up								
Phantom uncertainty	± 4.0%	Rectangular	√3	1	1	± 2.3%	± 2.3%	∞
Liquid conductivity (target)	± 5.0%	Rectangular	√3	0.64	0.43	± 1.8%	± 1.2%	∞
Liquid conductivity (meas.)	± 2.5%	Normal	1	0.64	0.43	± 1.6%	± 1.1%	∞
Liquid permittivity (target)	± 5.0%	Rectangular	√3	0.6	0.49	± 1.7%	± 1.4%	∞
Liquid permittivity (meas.)	± 2.5%	Normal	1	0.6	0.49	± 1.5%	± 1.2%	∞
Combined Uncertainty						± 11.5%	± 11.2%	330
Expanded Std. Uncertainty						**± 23.0%**	**± 22.5%**	

Table 6: Measurement uncertainties

Note : Worst case probe calibration uncertainty has been applied for all probes used during the measurements.

6.1.12 Measurement uncertainty evaluation for system validation

The overall combined measurement uncertainty of the measurement system is ± 9.6% (K=1).
The expanded uncertainty (k=2) is assessed to be ± 19.2%
This measurement uncertainty budget is suggested by IEEE 1528-2003 and determined by Schmid & Partner Engineering AG. The breakdown of the individual uncertainties is as follows:

Error Sources	Uncertainty Value	Probability Distribution	Divi-sor	c_i 1g	c_i 10g	Standard Uncertainty 1g	Standard Uncertainty 10g	v_i^2 or v_{eff}
Measurement System								
Probe calibration	± 6.0%	Normal	1	1	1	± 6.0%	± 6.0%	∞
Axial isotropy	± 4.7%	Rectangular	√3	0.7	0.7	± 1.9%	± 1.9%	∞
Hemispherical isotropy	± 0.0%	Rectangular	√3	0.7	0.7	± 0.0%	± 3.9%	∞
Boundary effects	± 1.0%	Rectangular	√3	1	1	± 0.6%	± 0.6%	∞
Probe linearity	± 4.7%	Rectangular	√3	1	1	± 2.7%	± 2.7%	∞
System detection limits	± 1.0%	Rectangular	√3	1	1	± 0.6%	± 0.6%	∞
Readout electronics	± 1.0%	Normal	1	1	1	± 1.0%	± 1.0%	∞
Response time	± 0.0%	Rectangular	√3	1	1	± 0.0%	± 0.0%	∞
Integration time	± 0.0%	Rectangular	√3	1	1	± 0.0%	± 0.0%	∞
RF ambient conditions	± 3.0%	Rectangular	√3	1	1	± 1.7%	± 1.7%	∞
Probe positioner	± 0.4%	Rectangular	√3	1	1	± 0.2%	± 0.2%	∞
Probe positioning	± 2.9%	Rectangular	√3	1	1	± 1.7%	± 1.7%	∞
Max. SAR evaluation	± 1.0%	Rectangular	√3	1	1	± 0.6%	± 0.6%	∞
Test Sample Related								
Dipole axis to liquid distance	± 2.0%	Normal	1	1	1	± 1.2%	± 1.2%	∞
Power drift	± 4.7%	Rectangular	√3	1	1	± 2.7%	± 2.7%	∞
Phantom and Set-up								
Phantom uncertainty	± 4.0%	Rectangular	√3	1	1	± 2.3%	± 2.3%	∞
Liquid conductivity (target)	± 5.0%	Rectangular	√3	0.64	0.43	± 1.8%	± 1.2%	∞
Liquid conductivity (meas.)	± 2.5%	Normal	1	0.64	0.43	± 1.6%	± 1.1%	∞
Liquid permittivity (target)	± 5.0%	Rectangular	√3	0.6	0.49	± 1.7%	± 1.4%	∞
Liquid permittivity (meas.)	± 2.5%	Normal	1	0.6	0.49	± 1.5%	± 1.2%	∞
Combined Uncertainty						**± 9.6%**	**± 9.3%**	
Expanded Std. Uncertainty						**± 19.2%**	**± 18.6%**	

Table 7: Measurement uncertainties

Note : Worst case probe calibration uncertainty has been applied for all probes used during the measurements.

6.1.13 System validation

The system validation is performed for verifying the accuracy of the complete measurement system and performance of the software. The system validation is performed with tissue equivalent material according to IEEE 1528. The following table shows validation results for all frequency bands and tissue liquids used during the tests (plot(s) see annex A).

Validation Kit	Frequency	Target Peak SAR (1000 mW) (+/- 10%)	Target SAR_{1g} (1000 mW) (+/- 10%)	Measured Peak SAR (1000 mW)	Measured SAR_{1g} (1000 mW)	Measured date
D900V2 S/N: 102	**900 MHz head**	16.0 mW/g	10.9 mW/g	16.8 mW/g	11.2 mW/g	2011-11-30
D900V2 S/N: 102	**900 MHz head**	16.0 mW/g	10.9 mW/g	16.5 mW/g	11.1 mW/g	2011-12-01
D900V2 S/N: 102	**900 MHz body**	17.3 mW/g	11.2 mW/g	15.9 mW/g	11.1 mW/g	2011-12-03
D900V2 S/N: 102	**900 MHz body**	17.3 mW/g	11.2 mW/g	16.4 mW/g	11.4 mW/g	2011-12-04
D1900V2 S/N: 5d009	**1900 MHz head**	73.6 mW/g	40.0 mW/g	70.3 mW/g	38.6 mW/g	2011-11-28
D1900V2 S/N: 5d009	**1900 MHz body**	73.8 mW/g	40.9 mW/g	70.5 mW/g	41.1 mW/g	2011-12-07
D2450V2 S/N: 710	**2450 MHz head**	102.4 mW/g	54.2 mW/g	106.0 mW/g	51.5 mW/g	2011-11-30
D2450V2 S/N: 710	**2450 MHz body**	108.0 mW/g	51.7 mW/g	103.8 mW/g	50.2 mW/g	2011-12-05
D2450V2 S/N: 710	**2450 MHz body**	108.0 mW/g	51.7 mW/g	104.9 mW/g	50.9 mW/g	2011-12-06

Table 8: Results system validation

Note : 900 MHz probe/dipole calibration is valid +/-100 MHz and fully covers the 850 MHz band.

6.1.14 Validation procedure

The validation is performed by using a validation dipole which is positioned parallel to the planar part of the SAM phantom at the reference point. The distance of the dipole to the SAM phantom is determined by a plexiglass spacer. The dipole is connected to the signal source consisting of signal generator and amplifier via a directional coupler, N-connector cable and adaption to SMA. It is fed with a power of 1000 mW. To adjust this power a power meter is used. The power sensor is connected to the cable before the validation to measure the power at this point and do adjustments at the signal generator. At the outputs of the directional coupler both return loss as well as forward power are controlled during the validation to make sure that emitted power at the dipole is kept constant. This can also be checked by the power drift measurement after the test (result on plot).
Validation results have to be equal or near the values determined during dipole calibration (target SAR in table above) with the relevant liquids and test system.

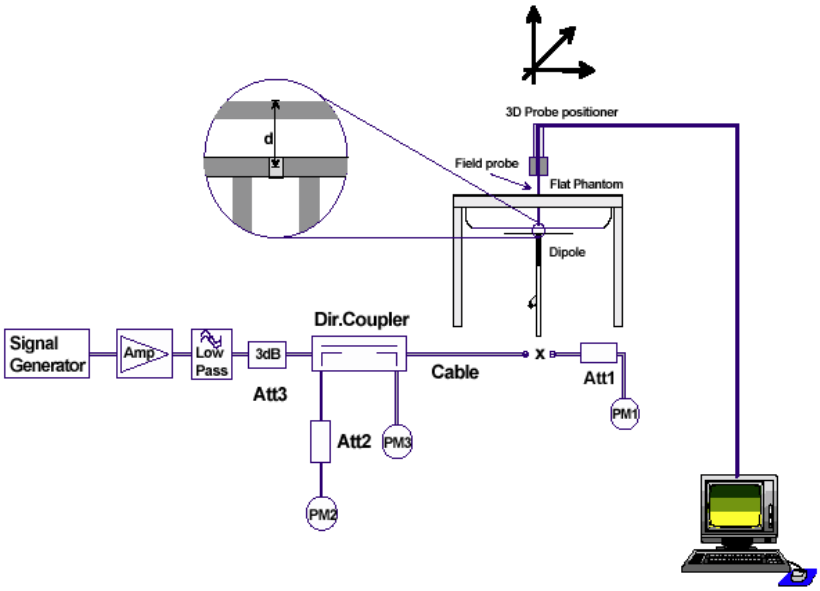

7 Detailed Test Results

7.1 Conducted power measurements

For the measurements a Rohde & Schwarz Radio Communication Tester CMU 200 was used.
The output power was measured using an integrated RF connector and attached RF cable.
The conducted output power was also checked before and after each SAR measurement. The resulting power values were within a 0.2 dB tolerance of the values shown below.

Note: CMU200 measures GSM peak and average output power for active timeslots.
For SAR the timebased average power is relevant. The difference inbetween depends on the duty cycle of the TDMA signal :

No. of timeslots	***1***	***2***	***3***	***4***
Duty Cycle	1 : 8	1: 4	1 : 2.66	1 : 2
timebased avg. power compared to slotted avg. power	- 9 dB	- 6 dB	- 4.25 dB	- 3 dB

The signalling modes differ as follows :

mode	***coding scheme***	***modulation***
GPRS	CS1 to CS4	GMSK
EGPRS (EDGE)	MCS1 to MCS4	GMSK
EGPRS (EDGE)	MCS5 to MCS9	8PSK

Apart from modulation change (GMSK/8PSK) coding schemes differ in code rate without influence on the RF signal. Therefore one coding scheme per mode was selected for conducted power measurements.

7.1.1 Conducted power measurements GSM 850 MHz

Channel / frequency	modulation	timeslots	slotted avg. power	time based avg. power (calculated)
128 / 824.2 MHz	GMSK	1	33.0 dBm	24.0 dBm
190 / 836.6 MHz	GMSK	1	33.1 dBm	24.1 dBm
251 / 848.0 MHz	GMSK	1	33.3 dBm	24.3 dBm
128 / 824.2 MHz	GMSK	2	30.8 dBm	24.8 dBm
190 / 836.6 MHz	GMSK	2	31.0 dBm	25.0 dBm
251 / 848.0 MHz	GMSK	2	31.0 dBm	25.0 dBm
128 / 824.2 MHz	GMSK	3	28.6 dBm	24.35 dBm
190 / 836.6 MHz	GMSK	3	28.9 dBm	24.65 dBm
251 / 848.0 MHz	GMSK	3	28.7 dBm	24.45 dBm
128 / 824.2 MHz	GMSK	4	27.5 dBm	**24.5 dBm**
190 / 836.6 MHz	GMSK	4	28.1 dBm	**25.1 dBm**
251 / 848.0 MHz	GMSK	4	28.2 dBm	**25.2 dBm**
128 / 824.2 MHz	8PSK	4	22.6 dBm	19.6 dBm
190 / 836.6 MHz	8PSK	4	22.6 dBm	19.6 dBm
251 / 848.0 MHz	8PSK	4	22.8 dBm	19.8 dBm

Table 9: Test results conducted power measurement GSM 850 MHz

7.1.2 Conducted power measurements GSM 1900 MHz

Channel / frequency	modulation	timeslots	slotted avg. power	time based avg. power (calculated)
512 / 1850.2 MHz	GMSK	1	30.1 dBm	21.1 dBm
661 / 1880.0 MHz	GMSK	1	30.1 dBm	21.1 dBm
810 / 1909.8 MHz	GMSK	1	30.1 dBm	21.1 dBm
512 / 1850.2 MHz	GMSK	2	27.9 dBm	21.9 dBm
661 / 1880.0 MHz	GMSK	2	27.9 dBm	21.9 dBm
810 / 1909.8 MHz	GMSK	2	28.1 dBm	22.1 dBm
512 / 1850.2 MHz	GMSK	3	26.6 dBm	22.35 dBm
661 / 1880.0 MHz	GMSK	3	27.0 dBm	22.75 dBm
810 / 1909.8 MHz	GMSK	3	26.4 dBm	22.15 dBm
512 / 1850.2 MHz	GMSK	4	26.0 dBm	**23.0 dBm**
661 / 1880.0 MHz	GMSK	4	26.0 dBm	**23.0 dBm**
810 / 1909.8 MHz	GMSK	4	25.4 dBm	**22.4 dBm**
512 / 1850.2 MHz	8PSK	4	22.2 dBm	19.2 dBm
661 / 1880.0 MHz	8PSK	4	22.0 dBm	19.0 dBm
810 / 1909.8 MHz	8PSK	4	21.9 dBm	18.9 dBm

Table 10: Test results conducted power measurement GSM 1900 MHz

7.1.3 Justification of SAR measurements in GSM mode

SAR measurements were performed in GPRS mode with 4 active timeslots because highest time based averaged output power was calculated for that configuration.
For comparison an additional delta measurement was performed with 1 timeslot in speech mode. In EDGE mode no delta measurement was performed.

7.1.4 Conducted power measurements WCDMA FDD V (850 MHz)

Max. RMS output power 850 MHz (FDD V) / dBm			
	Channel / frequency		
mode	4132 / 826.4 MHz	4182 / 836.6 MHz	4233 / 846.6 MHz
RMC 12.2 kbit/s	**25.0**	**24.9**	**24.9**
RMC 64 kbit/s	25.0	24.8	24.8
RMC 144 kbit/s	25.0	24.9	24.9
RMC 384 kbit/s	25.0	24.8	24.8
AMR 4.75 kbit/s	25.0	24.8	24.8
AMR 5.15 kbit/s	25.0	24.8	24.8
AMR 5.9 kbit/s	25.0	24.8	24.8
AMR 6.7 kbit/s	25.0	24.8	24.8
AMR 7.4 kbit/s	25.0	24.8	24.8
AMR 7.95 kbit/s	25.0	24.8	24.8
AMR 10.2 kbit/s	25.0	24.8	24.8
AMR 12.2 kbit/s	25.0	24.8	24.8
HSDPA Sub test 1	**24.8**	**24.5**	**24.5**
HSDPA Sub test 2	22.8	22.8	22.8
HSDPA Sub test 3	21.2	21.2	21.2
HSDPA Sub test 4	21.0	21.0	21.0
HSUPA Sub test 1	**23.7**	**23.8**	**23.9**
HSUPA Sub test 2	22.2	22.4	22.0
HSUPA Sub test 3	23.0	23.1	23.1
HSUPA Sub test 4	22.5	22.9	22.3
HSUPA Sub test 5	**23.5**	**23.7**	**23.8**

Table 11: Test results conducted power measurement WCDMA 850

Remark: None of the HSDPA/HSUPA settings leads to conducted power values exceeding the conducted power in RMC mode by more than 0.25 dB.
Therefore no additional SAR measurements were performed in HSDPA/HSUPA mode.

7.1.5 Test-set-up information for WCDMA / HSPDA / HSUPA

a) RMC

In RMC (reference measurement channel) mode the conducted power at 4 different bit rates was measured. They correspond with the used spreading factors as follows :

Bit rate	***12.2 kbit/s***	***64 kbit/s***	***144 kbit/s***	***384 kbit/s***
Spreading factor (SF)	64	16	8	4

In RMC mode only DPCCH and DPDCH are active. As bit rate changes do not influence the relative power of any code channel the measured RMS output power remains on the same level which is set to maximum by TPC (Transmit power control) pattern type 'All 1'.

b) HSDPA

HSDPA adds the HS-DPCCH in uplink as a control channel for high speed data transfer in downlink.
In HSDPA mode 4 sub-tests are defined by 3GPP 34.121 according to the following table:

Sub-test	**b_c**	**b_d**	**b_d (SF)**	**b_c/b_d**	**b_{hs}(1)**	**CM(dB)(2)**
1	2/15	15/15	64	2/15	4/15	0.0
2	12/15(3)	15/15(3)	64	12/15(3)	24/15	1.0
3	15/15	8/15	64	15/8	30/15	1.5
4	15/15	4/15	64	15/4	30/15	1.5
Note 1: D_{ACK}, D_{NACK}, D_{CQI} = 8 Ü Þ $A_{hs} = b_{hs}/b_c$ = 30/15 Ü Þ b_{hs} = 30/15 * b_c Note 2 : CM = 1 for b_c/b_d = 12/15, b_{hs}/b_c = 24/15 Note 3 : For subtest 2 the b_c/b_d ratio of 12/15 for the TFC during the measurement period (TF1, TF0) is achieved by setting the signalled gain factors for the reference TFC (TF1,TF1) to b_c = 11/15 and b_d = 15/15						

Table 12: Sub-tests for UMTS Release 5 HSDPA

The b_c and b_d gain factors for DPCCH and DPDCH were set according to the values in the above table, b_{hs} for HS-DPCCH is set automatically to the correct value when D_{ACK}, D_{NACK}, D_{CQI} = 8. The variation of the b_c /b_d ratio causes a power reduction at sub-tests 2 - 4.

The measurements were performed with a Fixed Reference Channel(FRC) and H-Set 1 QPSK.

Parameter	***Value***
Nominal average inf. bit rate	534 kbit/s
Inter-TTI Distance	3 TTI's
Number of HARQ Processes	2 Processes
Information Bit Payload	3202 Bits
MAC-d PDU size	336 Bits
Number Code Blocks	1 Block
Binary Channel Bits Per TTI	4800 Bits
Total Available SMLs in UE	19200 SMLs
Number of SMLs per HARQ Process	9600 SMLs
Coding Rate	0.67
Number of Physical Channel Codes	5

Table 13: settings of required H-Set 1 QPSK acc. to 3GPP 34.121

c) HSUPA

In HSUPA mode additional code channels (E-DPCCH, E-DPDCHn) are added for data transfer in uplink at higher bit rates.

5 sub-tests are defined by 3GPP 34.121 according to the following table :

Sub-test	**b_c**	**b_d**	**b_d (SF)**	**b_c/b_d**	**b_{hs}(1)**	**b_{ec}**	**b_{ed}**	**b_{ec} (SF)**	**b_{ed} (code)**	**CM(2) (dB)**	**MPR (dB)**	**AG(4) Index**	**E-TFCI**
1	11/15(3)	15/15(3)	64	11/15(3)	22/15	209/225	1039/225	4	1	1.0	0.0	20	75
2	6/15	15/15	64	6/15	12/15	12/15	94/75	4	1	3.0	2.0	12	67
3	15/15	9/15	64	15/9	30/15	30/15	b_{ed1}:47/15 b_{ed2}:47/15	4	2	2.0	1.0	15	92
4	2/15	15/15	64	2/15	4/15	2/15	56/75	4	1	3.0	2.0	17	71
5	15/15(4)	15/15(4)	64	15/15(4)	30/15	24/15	134/15	4	1	1.0	0.0	21	81

Note 1: D_{ACK}, D_{NACK}, D_{CQI} = 8 Ü Þ $A_{hs} = b_{hs}/b_c$ = 30/15 Ü Þ b_{hs} = 30/15 * b_c
Note 2 : CM = 1 for b_c/b_d = 12/15, b_{hs}/b_c = 24/15. For all other combinations of DPDCH, DPCCH, HS-DPCCH, E-DPDCH and E-DPCCH the MPR is based on the relative CM difference
Note 3 : For subtest 1 the b_c/b_d ratio of 11/15 for the TFC during the measurement period (TF1, TF0) is achieved by setting the signalled gain factors for the reference TFC (TF1,TF1) to b_c = 10/15 and b_d = 15/15
Note 4 : For subtest 5 the b_c/b_d ratio of 15/15 for the TFC during the measurement period (TF1, TF0) is achieved by setting the signalled gain factors for the reference TFC (TF1,TF1) to b_c = 14/15 and b_d = 15/15
Note 5 : Testing UE using E-DPDCH Physical Layer category 1 Sub-test 3 is not required according to TS 25.306 Table 5.1g
Note 6 : b_{ed} can not be set directly; it is set by Absolute Grant Value

Table 14: Subtests for UMTS Release 6 HSUPA

To achieve the settings above some additional procedures were defined by 3GPP 34.121. Those have been included in an application note for the CMU200 and were exactly followed :

- Test mode connection (BS signal tab) :
RMC 12.2 kbit/s + HSPA 34.108 with loop mode 1
- HS-DSCH settings (BS signal tab):
- FRC with H-set 1 QPSK
- ACK-NACK repetition factor = 3
- CQI feedback cycle = 4ms
- CQI repetition factor = 2
- HSUPA-specific signalling settings (UE signal tab) :
- E-TFCI table index = 0
- E-DCH minimum set E-TFCI = 9
- Puncturing limit non-max = 0.84
- max. number of channelisation codes = 2x SF4
- Initial Serving Grant Value = Off
- HSDPA and HSUPA Gain factors (UE signal tab)

Sub-test	**b_c**	**b_d**	**D_{ACK}, D_{NACK}, D_{CQI}**	**DE- DPCCH)***
1	10	15	8	6
2	6	15	8	8
3	15	9	8	8
4	2	15	8	5
5	14	15	8	7

)* : b_{ec} and b_{ed} ratios (relative to b_c and b_d) are set by DE- DPCCH

- HSUPA Reference E-TFCIs (UE signal tab > HSUPA gain factors) :

Sub-test	**1, 2, 4, 5**				
Number of E-TFCIs	5				
Reference E-TFCI	11	67	71	75	81
Reference E-TFCI power offset	4	18	23	26	27

Sub-test	**3**	
Number of E-TFCIs	2	
Reference E-TFCI	11	92
Reference E-TFCI power offset	4	18

- HSUPA-specific generator parameters (BS Signal tab > HSUPA > E-AGCH > AG Pattern)

Sub-test	***Absolute Grant Value (AG Index)***
1	20
2	12
3	15
4	17
5	21

- Power Level settings (BS Signal tab > Node B-settings):
- Level reference : Output Channel Power (Ior)
- Output Channel Power (Ior) : -86 dBm

- Downlink Physical Channel Settings (BS signal tab)
- P-CPICH : -10 dB
- S-CPICH : Off
- P-SCH : -15 dB
- S-SCH : -15 dB
- P-CCPCH : -12 dB
- S-CCPCH : -12 dB
- PICH : -15 dB
- AICH : -12 dB
- DPDCH : -10 dB
- HS-SCCH : -8 dB
- HS-PDSCH : -3 dB
- E-AGCH : -20 dB
- E-RGCH/E-HICH - 20 dB
- E-RGCH Active : Off

The settings above were stored once for each sub-test and recalled before the measurement.

HSUPA test procedure :

To reach maximum output power in HSUPA mode the following procedures were followed:

3 different TPC patterns were defined :
Set 1 : Closed loop with target power 10 dBm
Set 2 : Single Pattern+Alternating with binary pattern '11111' for 1 dB steps 'up'
Set 3 : Single Pattern+Alternating with binary pattern '00000' for 1 dB steps 'down'

After recalling a certain HSUPA sub-test the HSUPA E-AGCH graph with E-TFCI event counter is displayed. After starting with the closed loop command the power is increased in 1 dB steps by activating pattern set 2 until the UE decreases the transmitted E-TFCI.
At this point set 3 is activated once to reduce the output power to the value at which the original E-TFCI, which is required for the sub-test, appears again.

For conducted power measurements the same steps are repeated in the power menu to read out the corresponding maximum RMS output power with the target E-TFCI.
For SAR measurements it is useful to switch to Code Domain Power vs. Time display.
Here the CMU200 shows relative power values (max. and min.) of each code channel which should roughly correspond to the numerators of the gain factors e.g. :

Sub-test	b_c	b_d	b_{hs}	b_{ec}	b_{ed}
5	15	15	30	24	134

By this way a surveillance of signalling conditions is possible to make sure that HSUPA code channels are active during the complete SAR measurement.

7.1.6 Conducted power measurements WLAN 2.4 GHz

Channel / frequency	modulation	bit rate	timebased avg. power
1 / 2412 MHz	CCK	1 MBit/s	14.1 dBm
6 / 2437 MHz	CCK	1 MBit/s	14.0 dBm
11 / 2462 MHz	CCK	1 MBit/s	14.1 dBm
1 / 2412 MHz	OFDM	6 MBit/s	13.4 dBm
6 / 2437 MHz	OFDM	6 MBit/s	13.4 dBm
11 / 2462 MHz	OFDM	6 MBit/s	13.7 dBm

Table 15: Test results conducted power measurement WLAN 2.4 GHz

7.1.7 Multiple Transmitter Information

The following tables list information which is relevant for the decision if a simultaneous transmit evaluation is necessary according to KDB 648474.

Minimum antenna separation distance between main antenna and WLAN – **102.2 mm**

a) head position

Tx No.	Communcation system and frequency band	P_{avg} (mW)	single SAR (W/kg) (see ch. 7.2)	remarks
1a	GSM 850 MHz	250	0.779	routine evaluation
1b	GSM 1900 MHz	125	0.869	routine evaluation
1c	FDD V 850 MHz	250	0.810	routine evaluation
2a	WLAN 2450 MHz	50	0.639	routine evaluation
2b	Bluetooth 2450 MHz	4.47	:=0	$P_2 < P_{ref}$ (P_{ref}: 12 mW at 2.4 GHz)
Sum of all 1g-SAR values			n/a	

Table 16: Communication systems and SAR values in head position

antenna pair (x,y)	peak-locations spacing L_{xy} (cm)	Σ 1g-SAR (W/kg)	$SPLSR_{xy}$	sim.-Tx SAR	remarks
(1a,2a)	6.20	1.418	0.23	N	$SPLSR_{xy}$ < 0.3 and ΣSAR < 1.6 W/kg
(1b,2a)	7.82	1.152	0.15	N	$SPLSR_{xy}$ < 0.3 and ΣSAR < 1.6 W/kg
(1c,2a)	6.43	1.449	0.23	N	$SPLSR_{xy}$ < 0.3 and ΣSAR < 1.6 W/kg

Table 17: Antenna distances and SPLSR evaluation in head position

SPLSRxy = SAR-to-(peak-locations spacing) ratio = (SARx+SARy)/Lxy

Σ 1g-SAR: sum of the highest SAR of Tx No. 1 and the SAR of Tx No. 2 at the same DUT position or orientation as the highest value of Tx No. 1 i.e. not necessarily the sum of the highest SAR values of both transmitters.

b) body position

Tx No.	Communcation system and frequency band	P_{avg} (mW)	single SAR (W/kg) (see ch. 7.2)	remarks
1a	GSM 850 MHz	500	0.984	routine evaluation
1b	GSM 1900 MHz	250	0.777	routine evaluation
1c	FDD V 850 MHz	250	1.100	routine evaluation
2a	WLAN 2450 MHz	50	0.077	routine evaluation
2b	Bluetooth 2450 MHz	4.47	:=0	$P_2 < P_{ref}$ (P_{ref}: 12 mW at 2.4 GHz)
Sum of all 1g-SAR values			n/a	

Table 18: Communication systems and SAR values in body position

antenna pair (x,y)	peak-locations spacing L_{xy} (cm)	Σ 1g-SAR (W/kg)	$SPLSR_{xy}$	sim.-Tx SAR	remarks
(1a,2a)	6.31	1.061	0.17	N	$SPLSR_{xy}$ < 0.3 and ΣSAR < 1.6 W/kg
(1b,2a)	8.64	0.854	0.10	N	$SPLSR_{xy}$ < 0.3 and ΣSAR < 1.6 W/kg
(1c,2a)	6.64	1.177	0.18	N	$SPLSR_{xy}$ < 0.3 and ΣSAR < 1.6 W/kg

Table 19: Antenna distances and SPLSR evaluation in body position
SPLSRxy = SAR-to-(peak-locations spacing) ratio = (SARx+SARy)/Lxy

7.1.8 Mobile hotspot SAR measurement positions

Mobile hotspot SAR measurement positions						
mode	front	rear	left edge	right edge	top edge	bottom edge
GSM 850	yes	yes	yes	yes	no	yes
GSM 1900	yes	yes	yes	yes	no	yes
WCDMA FDD V 850	yes	yes	yes	yes	no	yes
WLAN 2450	yes	yes	yes	no	yes	no

left

top

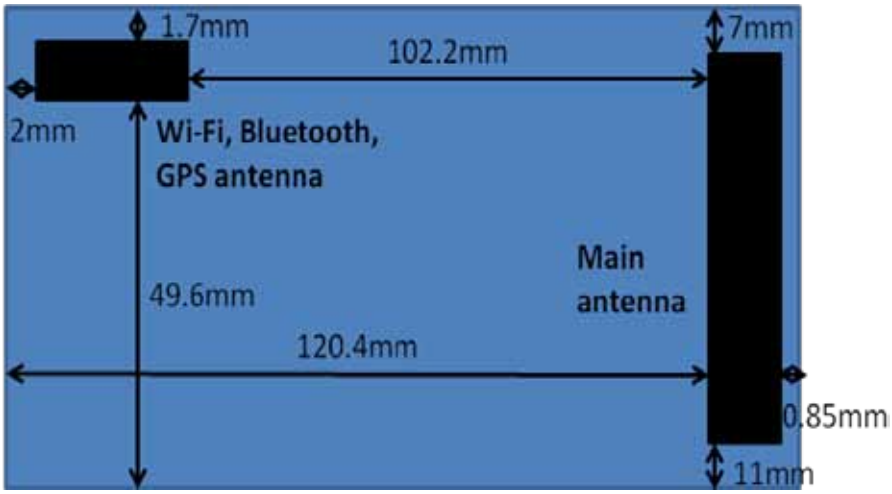

bottom

right

The edges with less than 2.5 cm distance to the TX antennas need to be tested for hotspot SAR.

7.2 SAR test results

7.2.1 Results overview

Head SAR GSM 850 MHz (averaged over 1g tissue volume)						
Channel / frequency	Position	Left hand test result	Right hand test result	Limit	Liquid temperature left	right
128 / 824.2 MHz	cheek	0.473 W/kg	0.479 W/kg	1.6 W/kg	21.9 °C	22.4 °C
190 / 836.6 MHz	cheek	0.685 W/kg	0.693 W/kg	1.6 W/kg	21.9 °C	22.4 °C
251 / 848.8 MHz	cheek	0.759 W/kg	**0.779 W/kg**	1.6 W/kg	21.9 °C	22.4 °C
128 / 824.2 MHz	tilted 15°	0.232 W/kg	0.223 W/kg	1.6 W/kg	21.9 °C	22.4 °C
190 / 836.6 MHz	tilted 15°	0.339 W/kg	0.338 W/kg	1.6 W/kg	21.9 °C	22.4 °C
251 / 848.8 MHz	tilted 15°	0.432 W/kg	0.426 W/kg	1.6 W/kg	21.9 °C	22.4 °C

Table 20: Test results head SAR GSM 850 MHz

Body SAR GSM 850 MHz (averaged over 1g tissue volume)						
Channel / frequency	Position	Distance	test condition	Body worn test result	Limit	Liquid temperature
128 / 824.2 MHz	front	10 mm	4 time slots	0.521 W/kg	1.6 W/kg	22.9 °C
190 / 836.6 MHz	front	10 mm	4 time slots	0.830 W/kg	1.6 W/kg	22.9 °C
251 / 848.8 MHz	front	10 mm	4 time slots	0.924 W/kg	1.6 W/kg	22.9 °C
128 / 824.2 MHz	rear	10 mm	4 time slots	0.624 W/kg	1.6 W/kg	22.9 °C
190 / 836.6 MHz	rear	10 mm	4 time slots	0.907 W/kg	1.6 W/kg	22.9 °C
251 / 848.8 MHz	rear	10 mm	4 time slots	**0.984 W/kg**	1.6 W/kg	22.9 °C
190 / 836.6 MHz	left	10 mm	4 time slots	0.782 W/kg	1.6 W/kg	22.9 °C
190 / 836.6 MHz	right	10 mm	4 time slots	0.634 W/kg	1.6 W/kg	22.9 °C
190 / 836.6 MHz	bottom	10 mm	4 time slots	0.130 W/kg	1.6 W/kg	22.9 °C
251 / 848.8 MHz	rear	15 mm	1 time slot	0.597 W/kg	1.6 W/kg	22.9 °C

Table 21: Test results body SAR GSM 850 MHz

Top edge position is not required since the distance from the main antenna to the edge is greater than 2.5 cm.

Head SAR GSM 1900 MHz (averaged over 1g tissue volume)						
Channel / frequency	Position	Left hand test result	Right hand test result	Limit	Liquid temperature left	right
512 / 1850.2 MHz	cheek	0.717 W/kg	0.333 W/kg	1.6 W/kg	20.2 °C	20.8 °C
661 / 1880.0 MHz	cheek	0.768 W/kg	0.378 W/kg	1.6 W/kg	20.2 °C	20.8 °C
810 / 1909.8 MHz	cheek	**0.869 W/kg**	0.421 W/kg	1.6 W/kg	20.2 °C	20.8 °C
512 / 1850.2 MHz	tilted 15°	0.285 W/kg	0.288 W/kg	1.6 W/kg	20.2 °C	20.8 °C
661 / 1880.0 MHz	tilted 15°	0.257 W/kg	0.267 W/kg	1.6 W/kg	20.2 °C	20.8 °C
810 / 1909.8 MHz	tilted 15°	0.239 W/kg	0.251 W/kg	1.6 W/kg	20.2 °C	20.8 °C

Table 22: Test results head SAR GSM 1900 MHz

Body SAR GSM 1900 MHz (averaged over 1g tissue volume)						
Channel / frequency	Position	Distance	test condition	Body worn test result	Limit	Liquid temperature
512 / 1850.2 MHz	front	10 mm	4 time slots	0.740 W/kg	1.6 W/kg	22.4 °C
661 / 1880.0 MHz	front	10 mm	4 time slots	0.764 W/kg	1.6 W/kg	22.4 °C
810 / 1909.8 MHz	front	10 mm	4 time slots	0.675 W/kg	1.6 W/kg	22.4 °C
512 / 1850.2 MHz	rear	10 mm	4 time slots	**0.777 W/kg**	1.6 W/kg	22.4 °C
661 / 1880.0 MHz	rear	10 mm	4 time slots	0.690 W/kg	1.6 W/kg	22.4 °C
810 / 1909.8 MHz	rear	10 mm	4 time slots	0.623 W/kg	1.6 W/kg	22.4 °C
661 / 1880.0 MHz	left	10 mm	4 time slots	0.331 W/kg	1.6 W/kg	22.4 °C
661 / 1880.0 MHz	right	10 mm	4 time slots	0.160 W/kg	1.6 W/kg	22.4 °C
661 / 1880.0 MHz	bottom	10 mm	4 time slots	0.142 W/kg	1.6 W/kg	22.4 °C
512 / 1850.2 MHz	rear	15 mm	1 time slot	0.344 W/kg	1.6 W/kg	22.4 °C

Table 23: Test results body SAR GSM 1900 MHz

Top edge position is not required since the distance from the main antenna to the edge is greater than 2.5 cm.

Head SAR UMTS FDD V 850 MHz (averaged over 1g tissue volume)						
Channel / frequency	Position	Left hand test result	Right hand test result	Limit	Liquid temperature left	right
4132 / 826.4 MHz	cheek	0.700 W/kg	0.723 W/kg	1.6 W/kg	21.9 °C	22.4 °C
4182 / 836.4 MHz	cheek	0.645 W/kg	0.681 W/kg	1.6 W/kg	21.9 °C	22.4 °C
4233 / 846.6 MHz	cheek	**0.831 W/kg**	0.810 W/kg	1.6 W/kg	21.9 °C	22.4 °C
4132 / 826.4 MHz	tilted 15°	0.410 W/kg	0.386 W/kg	1.6 W/kg	21.9 °C	22.4 °C
4182 / 836.4 MHz	tilted 15°	0.394 W/kg	0.386 W/kg	1.6 W/kg	21.9 °C	22.4 °C
4233 / 846.6 MHz	tilted 15°	0.535 W/kg	0.535 W/kg	1.6 W/kg	21.9 °C	22.4 °C

Table 24: Test results head SAR UMTS FDD V 850 MHz

Body SAR UMTS FDD V 850 MHz (averaged over 1g tissue volume)						
Channel / frequency	Position	Distance	test condition	Body worn test result	Limit	Liquid temperature
4132 / 826.4 MHz	front	10 mm	12.2kbit/s	0.793 W/kg	1.6 W/kg	22.9 °C
4182 / 836.4 MHz	front	10 mm	12.2kbit/s	0.914 W/kg	1.6 W/kg	22.9 °C
4233 / 846.6 MHz	front	10 mm	12.2kbit/s	0.989 W/kg	1.6 W/kg	22.9 °C
4132 / 826.4 MHz	rear	10 mm	12.2kbit/s	0.986 W/kg	1.6 W/kg	22.9 °C
4182 / 836.4 MHz	rear	10 mm	12.2kbit/s	0.986 W/kg	1.6 W/kg	22.9 °C
4233 / 846.6 MHz	rear	10 mm	12.2kbit/s	**1.100 W/kg**	1.6 W/kg	22.9 °C
4132 / 826.4 MHz	left	10 mm	12.2kbit/s	0.495 W/kg	1.6 W/kg	22.9 °C
4182 / 836.4 MHz	left	10 mm	12.2kbit/s	0.930 W/kg	1.6 W/kg	22.9 °C
4233 / 846.6 MHz	left	10 mm	12.2kbit/s	0.996 W/kg	1.6 W/kg	22.9 °C
4132 / 826.4 MHz	right	10 mm	12.2kbit/s	0.875 W/kg	1.6 W/kg	22.9 °C
4182 / 836.4 MHz	right	10 mm	12.2kbit/s	0.880 W/kg	1.6 W/kg	22.9 °C
4233 / 846.6 MHz	right	10 mm	12.2kbit/s	0.957 W/kg	1.6 W/kg	22.9 °C
4182 / 836.4 MHz	bottom	10 mm	12.2kbit/s	0.167 W/kg	1.6 W/kg	22.9 °C
4233 / 846.6 MHz	rear	15 mm	12.2kbit/s	0.690 W/kg	1.6 W/kg	22.9 °C

Table 25: Test results body SAR UMTS FDD V 850 MHz

Top edge position is not required since the distance from the main antenna to the edge is greater than 2.5 cm.

Head SAR WLAN 2450 MHz (averaged over 1g tissue volume)						
Channel / frequency	Position	Left hand test result	Right hand test result	Limit	Liquid temperature left	right
1 / 2412 MHz	cheek	0.202 W/kg	0.430 W/kg	1.6 W/kg	20.7 °C	20.7 °C
6 / 2437 MHz	cheek	0.283 W/kg	0.524 W/kg	1.6 W/kg	20.7 °C	20.7 °C
11 / 2462 MHz	cheek	0.254 W/kg	**0.639 W/kg**	1.6 W/kg	20.7 °C	20.7 °C
1 / 2412 MHz	tilted 15°	0.191 W/kg	0.268 W/kg	1.6 W/kg	20.7 °C	20.7 °C
6 / 2437 MHz	tilted 15°	0.254 W/kg	0.383 W/kg	1.6 W/kg	20.7 °C	20.7 °C
11 / 2462 MHz	tilted 15°	0.276 W/kg	0.529 W/kg	1.6 W/kg	20.7 °C	20.7 °C
11 / 2462 MHz	cheek OFDM 6 Mbps		0.628 W/kg	1.6 W/kg	--- °C	20.7 °C
11 / 2462 MHz	cheek OFDM 6.5 Mbps		0.558 W/kg	1.6 W/kg	--- °C	20.7 °C

Table 26: Test results head SAR WLAN 2450 MHz

Body SAR WLAN 2450 MHz (averaged over 1g tissue volume)						
Channel / frequency	Position	Distance	test condition	Body worn test result	Limit	Liquid temperature
1 / 2412 MHz	front	10 mm	CCK 1 Mbit/s	0.057 W/kg	1.6 W/kg	20.3 °C
6 / 2437 MHz	front	10 mm	CCK 1 Mbit/s	0.056 W/kg	1.6 W/kg	20.3 °C
11 / 2462 MHz	front	10 mm	CCK 1 Mbit/s	**0.077 W/kg**	1.6 W/kg	20.3 °C
1 / 2412 MHz	rear	10 mm	CCK 1 Mbit/s	0.051 W/kg	1.6 W/kg	20.3 °C
6 / 2437 MHz	rear	10 mm	CCK 1 Mbit/s	0.048 W/kg	1.6 W/kg	20.3 °C
11 / 2462 MHz	rear	10 mm	CCK 1 Mbit/s	**0.077 W/kg**	1.6 W/kg	20.3 °C
6 / 2437 MHz	left	10 mm	CCK 1 Mbit/s	0.045 W/kg	1.6 W/kg	20.3 °C
6 / 2437 MHz	right	10 mm	CCK 1 Mbit/s	0.012 W/kg	1.6 W/kg	20.3 °C
6 / 2437 MHz	top edge	10 mm	CCK 1 Mbit/s	0.041 W/kg	1.6 W/kg	20.3 °C
11 / 2462 MHz	rear	10 mm	OFDM 6Mbit/s	0.057 W/kg	1.6 W/kg	20.3 °C
11 / 2462 MHz	rear	10 mm	OFDM 6.5Mbit/s	0.047 W/kg	1.6 W/kg	20.3 °C

Table 27: Test results body SAR WLAN 2450 MHz

Bottom edge position is not required since the distance from the WLAN antenna to the edge is greater than 2.5cm.

Note:

The SAR test shall be performed at the high, middle and low frequency channels of each operating mode. If the SAR measured at mid-band channel for each test configuration is at least 3.0 dB lower than the SAR limit (< 0.8 W/kg), testing at the high and low channels is optional.
Per Oct 2010 TCB FCC Workshop, the edges with antennas within 2.5 cm are required to be evaluated for SAR to cover WLAN hot spot function.
Tests in body position were performed with 10 mm air gap between DUT and SAM.
The additional GSM and UMTS body tests were performed at worst case with 1 time slot in uplink or in speech mode for UMTS and 15 mm distance from DUT to the phantom in accordance with Sony Ericsson requirements.

7.2.2 General description of test procedures

The DUT is tested using a CMU 200 communications tester as controller unit to set test channels and maximum output power to the DUT, as well as for measuring the conducted peak power.
Test positions as described in the tables above are in accordance with the specified test standard.
Tests in body position were performed in that configuration, which generates the highest time based averaged output power (see conducted power results).
Tests in head position with GSM were performed in voice mode with 1 timeslot unless GPRS/EGPRS/DTM function allows parallel voice and data traffic on 2 or more timeslots (see section 2.4 for details).
UMTS was tested in RMC mode with 12.2 kbit/s and TPC bits set to ‘all 1’.
WLAN was tested in 802.11b mode with 1 MBit/s with the delta measurements in 802.11g and 802.11n modes on worst case position.

8 Test equipment and ancillaries used for tests

To simplify the identification of the test equipment and/or ancillaries which were used, the reporting of the relevant test cases only refer to the test item number as specified in the table below.

No	used	Equipment	Type	Manufacturer	Serial No.	Last Calibration	Frequency (months)
1	☒	Dosimetric E-Field Probe	ET3DV6	Schmid & Partner Engineering AG	1558	August 23, 2011	12
2	☒	Dosimetric E-Field Probe	ET3DV6	Schmid & Partner Engineering AG	1559	January 19, 2011	12
3	☒	900 MHz System Validation Dipole	D900V2	Schmid & Partner Engineering AG	102	August 15, 2011	12
4	☐	1800 MHz System Validation Dipole	D1800V2	Schmid & Partner Engineering AG	287	August 17, 2011	12
5	☒	1900 MHz System Validation Dipole	D1900V2	Schmid & Partner Engineering AG	531	August 17, 2011	12
6	☐	2450 MHz System Validation Dipole	D2450V2	Schmid & Partner Engineering AG	710	August 19, 2011	12
7	☒	Data acquisition electronics	DAE3V1	Schmid & Partner Engineering AG	413	January 13, 2011	12
8	☒	Data acquisition electronics	DAE3V1	Schmid & Partner Engineering AG	477	May 04, 2011	12
9	☒	Software	DASY 4 V4.5	Schmid & Partner Engineering AG	---	N/A	--
10	☒	Phantom	SAM	Schmid & Partner Engineering AG	---	N/A	--
11	☒	Universal Radio Communication Tester	CMU 200	Rohde & Schwarz	106826	January 12, 2011	12
12	☒	Network Analyser 300 kHz to 6 GHz	8753ES	Hewlett Packard)*	US39174436	July 6, 2010	12
13	☒	Dielectric Probe Kit	85070C	Hewlett Packard	US99360146	N/A	12
14	☒	Signal Generator	8665A	Hewlett Packard	2833A00112	January 6, 2011	12
15	☒	Amplifier	25S1G4 (25 Watt)	Amplifier Reasearch	20452	N/A	--
16	☒	Power Meter	NRP	Rohde & Schwarz	101367	January 6, 2011	12
17	☒	Power Meter Sensor	NRP Z22	Rohde & Schwarz	100227	January 6, 2011	12
18	☒	Power Meter Sensor	NRP Z22	Rohde & Schwarz	100234	January 6, 2011	12
19	☒	Directional Coupler	778D	Hewlett Packard	19171	January 8, 2011	12

)* : Network analyzer probe calibration against air, distilled water and a shorting block performed before measuring liquid parameters.

9 Observations

No observations exceeding those reported with the single test cases have been made.

Annex A: System performance verification

Date/Time: 30.11.2011 10:19:08Date/Time: 30.11.2011 10:22:48

SystemPerformanceCheck-D900 head 2011-11-30

DUT: Dipole 900 MHz; Type: D900V2; Serial: 102
Communication System: CW; Frequency: 900 MHz; Duty Cycle: 1:1
Medium: HSL900 Medium parameters used: f = 900 MHz; σ = 0.97 mho/m; ε_r = 41.5; ρ = 1000 kg/m^3
Phantom section: Flat Section
DASY4 Configuration:
- Probe: ET3DV6 - SN1558; ConvF(5.87, 5.87, 5.87); Calibrated: 23.08.2011
- Sensor-Surface: 4mm (Mechanical And Optical Surface Detection)
- Electronics: DAE3 Sn413; Calibrated: 13.01.2011
- Phantom: SAM 12; Type: SAM; Serial: 1043
- Measurement SW: DASY4, V4.5 Build 19; Postprocessing SW: SEMCAD, V1.8 Build 146

d=15mm, Pin=1000mW/Area Scan (51x51x1): Measurement grid: dx=15mm, dy=15mm

Maximum value of SAR (interpolated) = 11.9 mW/g

d=15mm, Pin=1000mW/Zoom Scan (7x7x7) (7x7x7)/Cube 0: Measurement grid: dx=5mm, dy=5mm, dz=5mm

Reference Value = 117.3 V/m; Power Drift = -0.00 dB
Peak SAR (extrapolated) = 16.8 W/kg
SAR(1 g) = 11.2 mW/g; SAR(10 g) = 7.18 mW/g
Maximum value of SAR (measured) = 12.2 mW/g

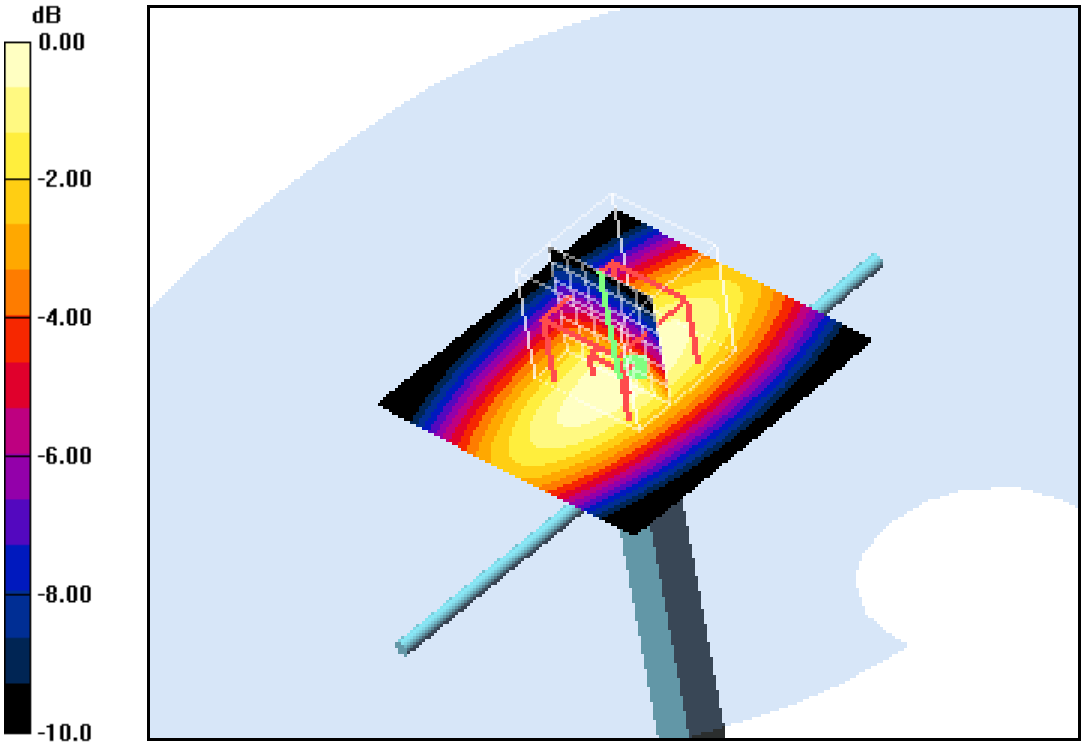

0 dB = 12.2mW/g

Additional information:
ambient temperature: 22.4°C; liquid temperature: 21.9°C

Date/Time: 01.12.2011 11:03:54Date/Time: 01.12.2011 11:07:33

SystemPerformanceCheck-D900 head 2011-12-01

DUT: Dipole 900 MHz; Type: D900V2; Serial: 102
Communication System: CW; Frequency: 900 MHz; Duty Cycle: 1:1
Medium: HSL900 Medium parameters used: f = 900 MHz; σ = 0.97 mho/m; ε_r = 41.5; ρ = 1000 kg/m^3
Phantom section: Flat Section
DASY4 Configuration:
- Probe: ET3DV6 - SN1558; ConvF(5.87, 5.87, 5.87); Calibrated: 23.08.2011
- Sensor-Surface: 4mm (Mechanical And Optical Surface Detection)
- Electronics: DAE3 Sn413; Calibrated: 13.01.2011
- Phantom: SAM 12; Type: SAM; Serial: 1043
- Measurement SW: DASY4, V4.5 Build 19; Postprocessing SW: SEMCAD, V1.8 Build 146

d=15mm, Pin=1000mW/Area Scan (51x51x1): Measurement grid: dx=15mm, dy=15mm

Maximum value of SAR (interpolated) = 11.9 mW/g

d=15mm, Pin=1000mW/Zoom Scan (7x7x7) (7x7x7)/Cube 0: Measurement grid: dx=5mm, dy=5mm, dz=5mm

Reference Value = 116.2 V/m; Power Drift = 0.00 dB
Peak SAR (extrapolated) = 16.5 W/kg
SAR(1 g) = 11.1 mW/g; SAR(10 g) = 7.18 mW/g
Maximum value of SAR (measured) = 12.2 mW/g

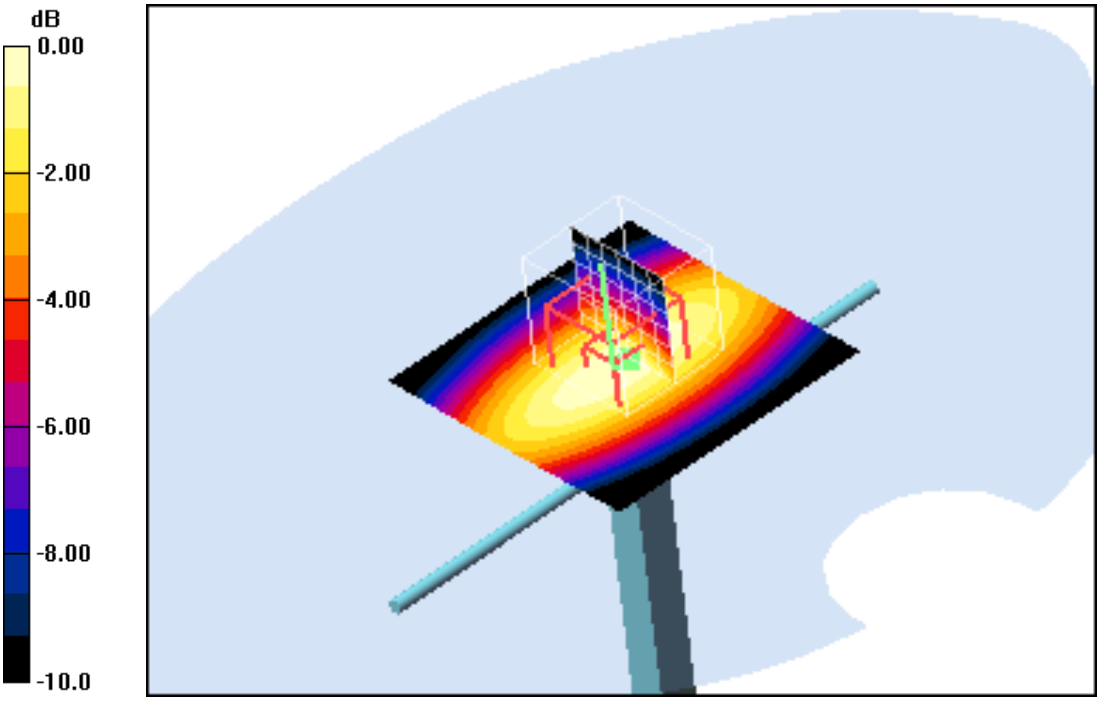

0 dB = 12.2mW/g

Additional information:
ambient temperature: 23.3°C; liquid temperature: 22.4°C

Date/Time: 03.12.2011 13:04:46Date/Time: 03.12.2011 13:08:24

SystemPerformanceCheck-D900 body 2011-12-03

DUT: Dipole 900 MHz; Type: D900V2; Serial: 102
Communication System: CW; Frequency: 900 MHz; Duty Cycle: 1:1
Medium: M900 Medium parameters used: f = 900 MHz; σ = 1.07 mho/m; ε_r = 54.5; ρ = 1000 kg/m^3
Phantom section: Flat Section
DASY4 Configuration:
- Probe: ET3DV6 - SN1558; ConvF(5.77, 5.77, 5.77); Calibrated: 23.08.2011
- Sensor-Surface: 4mm (Mechanical And Optical Surface Detection)
- Electronics: DAE3 Sn413; Calibrated: 13.01.2011
- Phantom: SAM 12; Type: SAM; Serial: 1043
- Measurement SW: DASY4, V4.5 Build 19; Postprocessing SW: SEMCAD, V1.8 Build 146

d=15mm, Pin=1000mW/Area Scan (51x51x1): Measurement grid: dx=15mm, dy=15mm

Maximum value of SAR (interpolated) = 12.0 mW/g

d=15mm, Pin=1000mW/Zoom Scan (7x7x7) (7x7x7)/Cube 0: Measurement grid: dx=5mm, dy=5mm, dz=5mm

Reference Value = 112.4 V/m; Power Drift = -0.080 dB
Peak SAR (extrapolated) = 15.9 W/kg
SAR(1 g) = 11.1 mW/g; SAR(10 g) = 7.26 mW/g
Maximum value of SAR (measured) = 12.1 mW/g

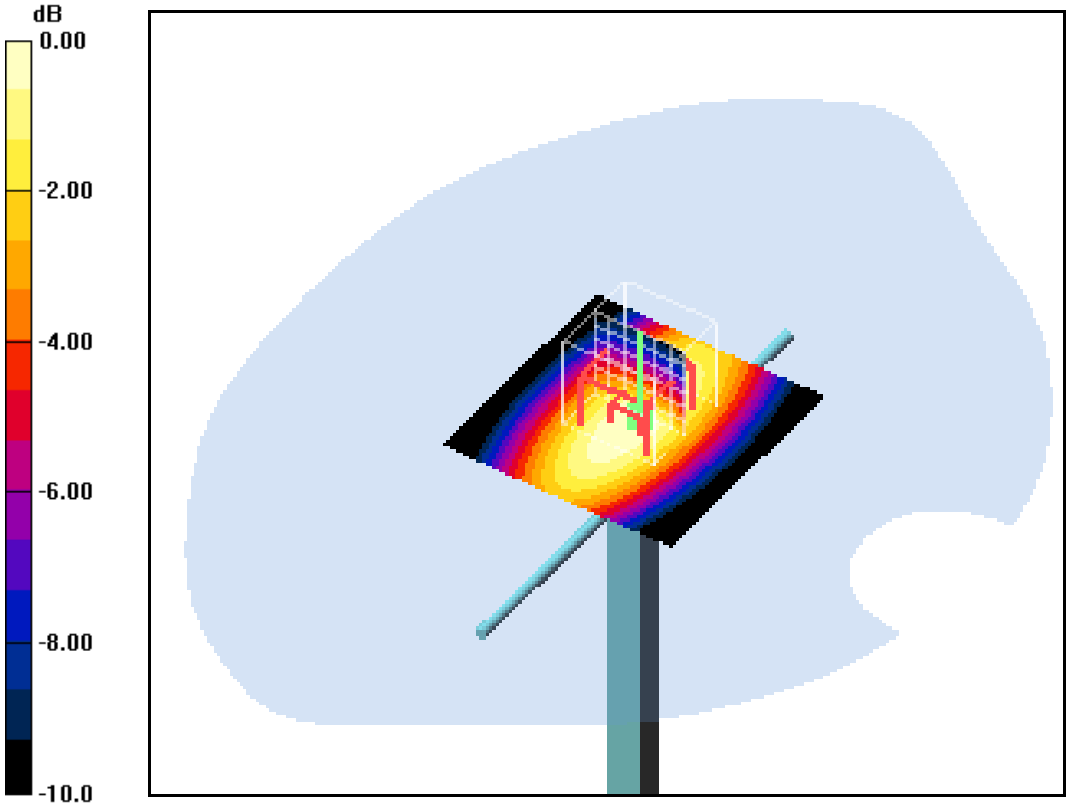

0 dB = 12.1mW/g

Additional information:
ambient temperature: 21.7°C; liquid temperature: 21.7°C

Date/Time: 04.12.2011 17:27:04Date/Time: 04.12.2011 17:30:42

SystemPerformanceCheck-D900 body 2011-12-04

DUT: Dipole 900 MHz; Type: D900V2; Serial: 102
Communication System: CW; Frequency: 900 MHz; Duty Cycle: 1:1
Medium: M900 Medium parameters used: f = 900 MHz; σ = 1.07 mho/m; ε_r = 54.5; ρ = 1000 kg/m^3
Phantom section: Flat Section
DASY4 Configuration:
- Probe: ET3DV6 - SN1558; ConvF(5.77, 5.77, 5.77); Calibrated: 23.08.2011
- Sensor-Surface: 4mm (Mechanical And Optical Surface Detection)
- Electronics: DAE3 Sn413; Calibrated: 13.01.2011
- Phantom: SAM 12; Type: SAM; Serial: 1043
- Measurement SW: DASY4, V4.5 Build 19; Postprocessing SW: SEMCAD, V1.8 Build 146

d=15mm, Pin=1000mW/Area Scan (51x51x1): Measurement grid: dx=15mm, dy=15mm
Maximum value of SAR (interpolated) = 12.0 mW/g

d=15mm, Pin=1000mW/Zoom Scan (7x7x7) (7x7x7)/Cube 0: Measurement grid: dx=5mm, dy=5mm, dz=5mm
Reference Value = 111.8 V/m; Power Drift = 0.058 dB
Peak SAR (extrapolated) = 16.4 W/kg
SAR(1 g) = 11.4 mW/g; SAR(10 g) = 7.45 mW/g
Maximum value of SAR (measured) = 12.4 mW/g

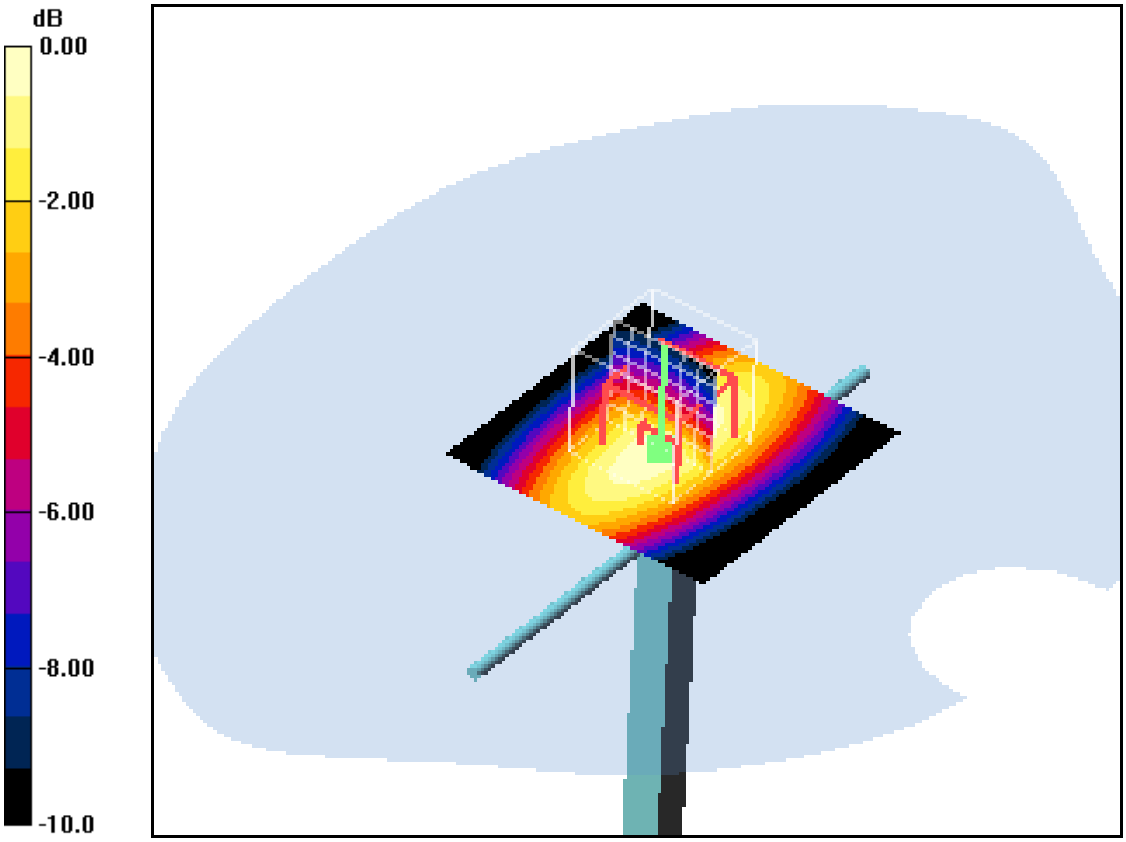

0 dB = 12.4mW/g

Additional information:
ambient temperature: 23.7°C; liquid temperature: 22.9°C

Date/Time: 28.11.2011 13:11:33Date/Time: 28.11.2011 13:15:12

SystemPerformanceCheck-D1900 head 2011-11-28

DUT: Dipole 1900 MHz; Type: D1900V2; Serial: 5d009
Communication System: CW; Frequency: 1900 MHz; Duty Cycle: 1:1
Medium: HSL1900 Medium parameters used: f = 1900 MHz; σ = 1.38 mho/m; ε_r = 40.1; ρ = 1000 kg/m^3
Phantom section: Flat Section
DASY4 Configuration:
- Probe: ET3DV6 - SN1558; ConvF(4.86, 4.86, 4.86); Calibrated: 23.08.2011
- Sensor-Surface: 4mm (Mechanical And Optical Surface Detection)
- Electronics: DAE3 Sn413; Calibrated: 13.01.2011
- Phantom: SAM 12; Type: SAM; Serial: 1043
- Measurement SW: DASY4, V4.5 Build 19; Postprocessing SW: SEMCAD, V1.8 Build 146

d=10mm, Pin=1000mW/Area Scan (51x51x1): Measurement grid: dx=15mm, dy=15mm

Maximum value of SAR (interpolated) = 50.1 mW/g

d=10mm, Pin=1000mW/Zoom Scan (7x7x7) (7x7x7)/Cube 0: Measurement grid: dx=5mm, dy=5mm, dz=5mm

Reference Value = 183.8 V/m; Power Drift = -0.018 dB
Peak SAR (extrapolated) = 70.3 W/kg
SAR(1 g) = 38.6 mW/g; SAR(10 g) = 20.1 mW/g
Maximum value of SAR (measured) = 43.5 mW/g

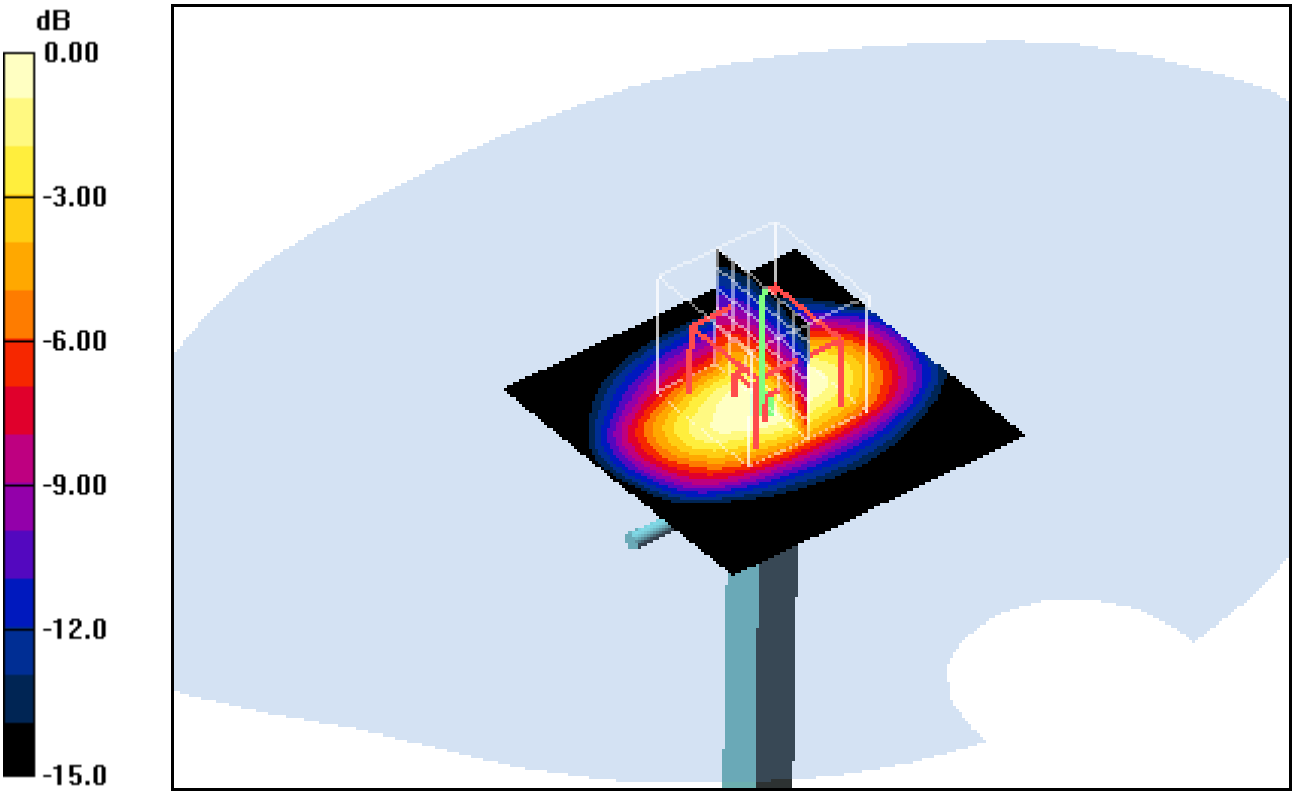

0 dB = 43.5mW/g

Additional information:
ambient temperature: 21.5°C; liquid temperature: 20.2°C

Date/Time: 07.12.2011 10:15:05Date/Time: 07.12.2011 10:18:43

SystemPerformanceCheck-D1900 body 2011-12-07

DUT: Dipole 1900 MHz; Type: D1900V2; Serial: 5d009
Communication System: CW; Frequency: 1900 MHz; Duty Cycle: 1:1
Medium: M1900 Medium parameters used: f = 1900 MHz; σ = 1.54 mho/m; ε_r = 52.6; ρ = 1000 kg/m^3
Phantom section: Flat Section
DASY4 Configuration:
- Probe: ET3DV6 - SN1558; ConvF(4.3, 4.3, 4.3); Calibrated: 23.08.2011
- Sensor-Surface: 4mm (Mechanical And Optical Surface Detection)
- Electronics: DAE3 Sn413; Calibrated: 13.01.2011
- Phantom: SAM 12; Type: SAM; Serial: 1043
- Measurement SW: DASY4, V4.5 Build 19; Postprocessing SW: SEMCAD, V1.8 Build 146

d=10mm, Pin=1000mW/Area Scan (51x51x1): Measurement grid: dx=15mm, dy=15mm
Maximum value of SAR (interpolated) = 59.7 mW/g

d=10mm, Pin=1000mW/Zoom Scan (7x7x7) (7x7x7)/Cube 0: Measurement grid: dx=5mm, dy=5mm, dz=5mm
Reference Value = 185.6 V/m; Power Drift = -0.00 dB
Peak SAR (extrapolated) = 70.5 W/kg
SAR(1 g) = 41.1 mW/g; SAR(10 g) = 21.9 mW/g
Maximum value of SAR (measured) = 46.7 mW/g

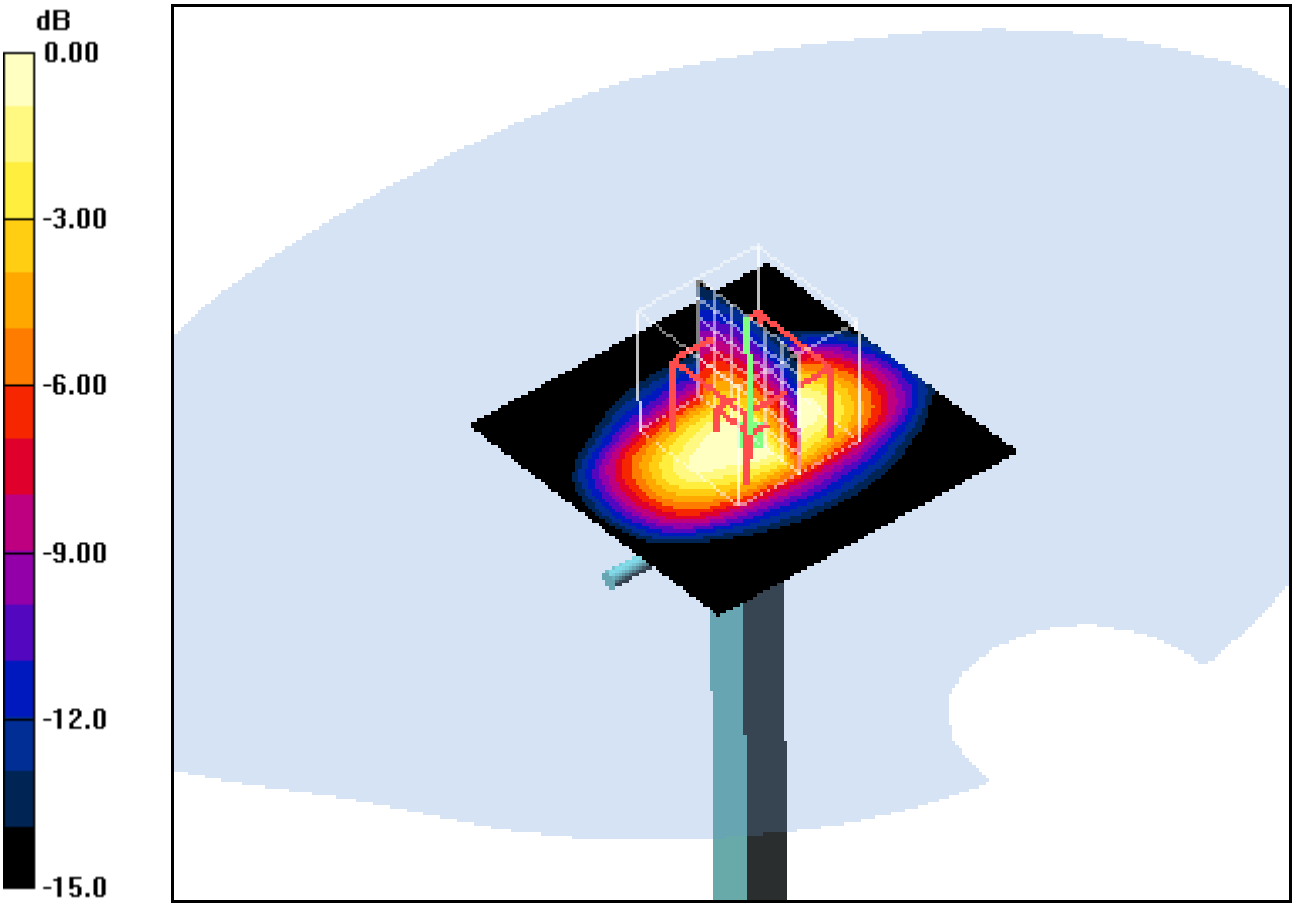

0 dB = 46.7mW/g

Additional information:
ambient temperature: 22.4°C; liquid temperature: 22.4°C

Date/Time: 30.11.2011 12:17:45Date/Time: 30.11.2011 12:21:23

SystemPerformanceCheck-D2450 head 2011-11-30

DUT: Dipole 2450 MHz; Type: D2450V2; Serial: D2450V2 - SN:710
Communication System: CW; Frequency: 2450 MHz; Duty Cycle: 1:1
Medium: HSL2450 Medium parameters used: f = 2450 MHz; σ = 1.82 mho/m; ε_r = 38.3; ρ = 1000 kg/m^3
Phantom section: Flat Section
DASY4 Configuration:
- Probe: ET3DV6 - SN1559; ConvF(4.38, 4.38, 4.38); Calibrated: 19.01.2011
- Sensor-Surface: 4mm (Mechanical And Optical Surface Detection)
- Electronics: DAE3 Sn477; Calibrated: 04.05.2011
- Phantom: SAM left; Type: SAM; Serial: 1041
- Measurement SW: DASY4, V4.7 Build 71; Postprocessing SW: SEMCAD, V1.8 Build 146

d=10mm, Pin=100mW/Area Scan (51x51x1): Measurement grid: dx=15mm, dy=15mm
Maximum value of SAR (interpolated) = 7.84 mW/g

d=10mm, Pin=100mW/Zoom Scan (7x7x7) (7x7x7)/Cube 0: Measurement grid: dx=5mm, dy=5mm, dz=5mm
Reference Value = 59.3 V/m; Power Drift = 0.043 dB
Peak SAR (extrapolated) = 10.6 W/kg
SAR(1 g) = 5.15 mW/g; SAR(10 g) = 2.41 mW/g
Maximum value of SAR (measured) = 5.87 mW/g

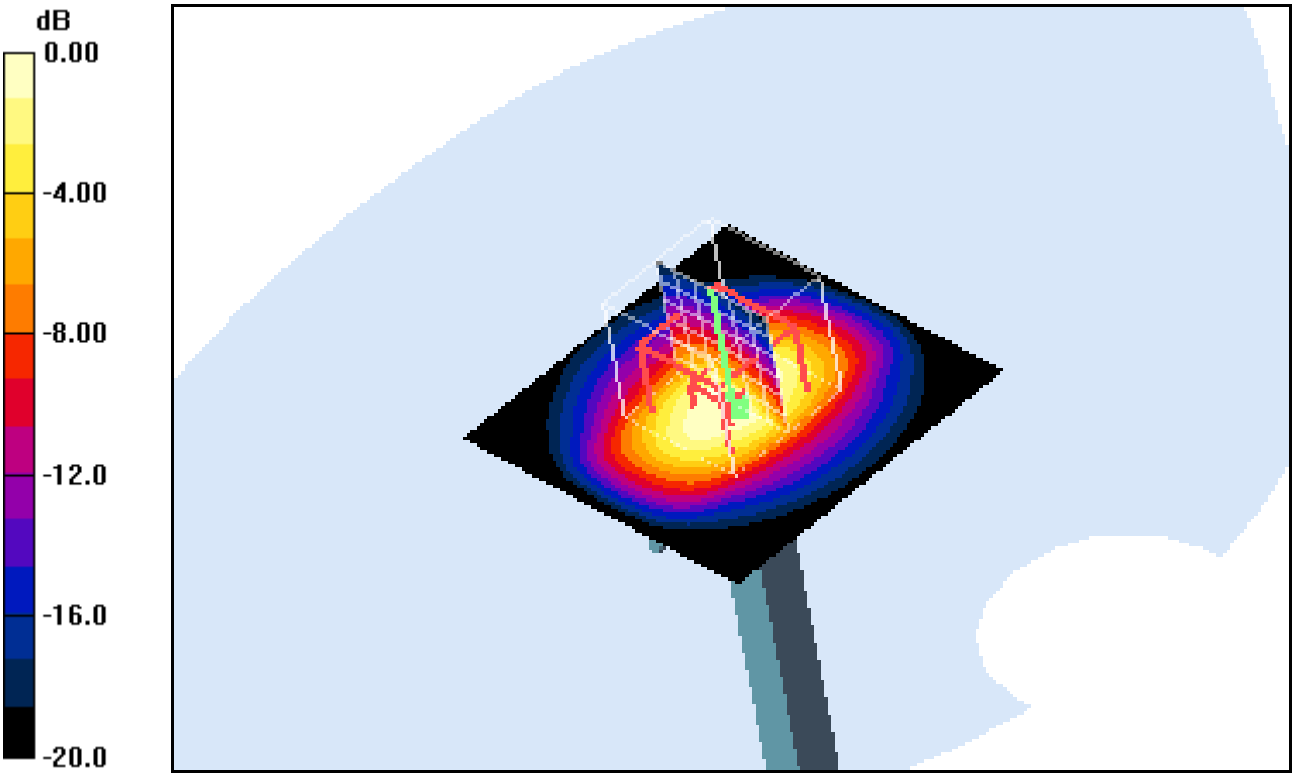

0 dB = 5.87mW/g

Additional information:
ambient temperature: 21.6°C; liquid temperature: 20.4°C

Date/Time: 05.12.2011 13:51:43Date/Time: 05.12.2011 13:55:07

SystemPerformanceCheck-D2450 body 2011-12-05

DUT: Dipole 2450 MHz; Type: D2450V2; Serial: D2450V2 - SN:710
Communication System: CW; Frequency: 2450 MHz; Duty Cycle: 1:1
Medium: M2450 Medium parameters used: f = 2450 MHz; σ = 1.97 mho/m; ε_r = 51.7; ρ = 1000 kg/m^3
Phantom section: Flat Section
DASY4 Configuration:
- Probe: ET3DV6 - SN1559; ConvF(3.91, 3.91, 3.91); Calibrated: 19.01.2011
- Sensor-Surface: 4mm (Mechanical And Optical Surface Detection)
- Electronics: DAE3 Sn477; Calibrated: 04.05.2011
- Phantom: SAM left; Type: SAM; Serial: 1041
- Measurement SW: DASY4, V4.7 Build 71; Postprocessing SW: SEMCAD, V1.8 Build 146

d=10mm, Pin=100mW/Area Scan (51x51x1): Measurement grid: dx=15mm, dy=15mm

Maximum value of SAR (interpolated) = 7.58 mW/g

d=10mm, Pin=100mW/Zoom Scan (7x7x7) (7x7x7)/Cube 0: Measurement grid: dx=5mm, dy=5mm, dz=5mm

Reference Value = 59.0 V/m; Power Drift = -0.033 dB
Peak SAR (extrapolated) = 10.38 W/kg
SAR(1 g) = 5.02 mW/g; SAR(10 g) = 2.39 mW/g
Maximum value of SAR (measured) = 5.88 mW/g

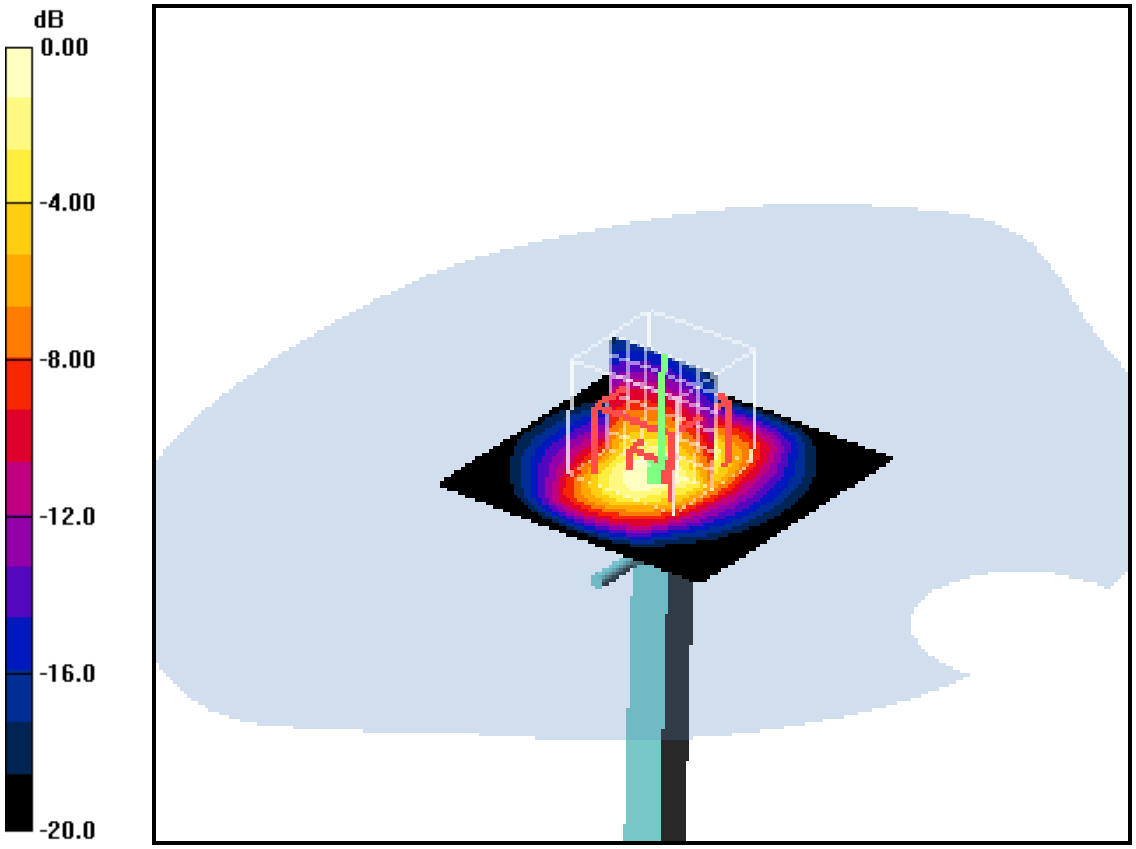

0 dB = 5.88mW/g

Additional information:
ambient temperature: 21.8°C; liquid temperature: 20.1°C

Date/Time: 06.12.2011 12:07:43Date/Time: 06.12.2011 12:11:20

SystemPerformanceCheck-D2450 body 2011-12-06

DUT: Dipole 2450 MHz; Type: D2450V2; Serial: D2450V2 - SN:710
Communication System: CW; Frequency: 2450 MHz; Duty Cycle: 1:1
Medium: M2450 Medium parameters used: f = 2450 MHz; σ = 1.97 mho/m; ε_r = 51.7; ρ = 1000 kg/m^3
Phantom section: Flat Section
DASY4 Configuration:
- Probe: ET3DV6 - SN1559; ConvF(3.91, 3.91, 3.91); Calibrated: 19.01.2011
- Sensor-Surface: 4mm (Mechanical And Optical Surface Detection)
- Electronics: DAE3 Sn477; Calibrated: 04.05.2011
- Phantom: SAM left; Type: SAM; Serial: 1041
- Measurement SW: DASY4, V4.7 Build 71; Postprocessing SW: SEMCAD, V1.8 Build 146

d=10mm, Pin=100mW/Area Scan (51x51x1): Measurement grid: dx=15mm, dy=15mm

Maximum value of SAR (interpolated) = 7.81 mW/g

d=10mm, Pin=100mW/Zoom Scan (7x7x7) (7x7x7)/Cube 0: Measurement grid: dx=5mm, dy=5mm, dz=5mm

Reference Value = 60.2 V/m; Power Drift = -0.021 dB
Peak SAR (extrapolated) = 10.49 W/kg
SAR(1 g) = 5.09 mW/g; SAR(10 g) = 2.43 mW/g
Maximum value of SAR (measured) = 5.93 mW/g

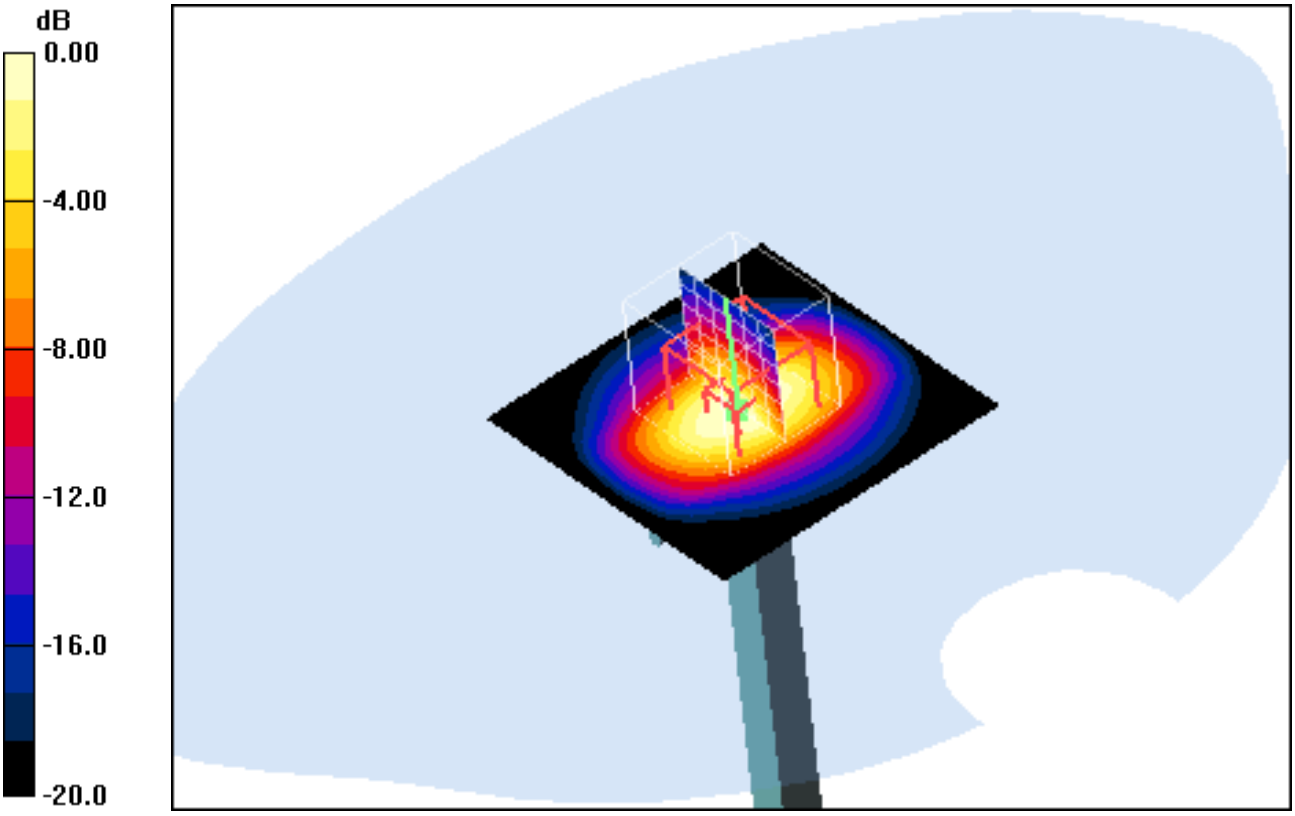

0 dB = 5.93mW/g

Additional information:
ambient temperature: 21.3°C; liquid temperature: 20.3°C

Annex B: DASY4 measurement results

Annex B.1: GSM 850MHz head

Date/Time: 30.11.2011 10:42:34Date/Time: 30.11.2011 10:52:03

IEEE1528_OET65-LeftHandSide-GSM850

DUT: Sony Ericsson; Type: AAD-3880136-BV; Serial: CB511VCC34
Communication System: GSM 850; Frequency: 824.2 MHz; Duty Cycle: 1:8
Medium: HSL850 Medium parameters used: f = 824.2 MHz; σ = 0.89 mho/m; ε_r = 42.5; ρ = 1000 kg/m^3
Phantom section: Left Section
DASY4 Configuration:
- Probe: ET3DV6 - SN1558; ConvF(5.95, 5.95, 5.95); Calibrated: 23.08.2011
- Sensor-Surface: 4mm (Mechanical And Optical Surface Detection)
- Electronics: DAE3 Sn413; Calibrated: 13.01.2011
- Phantom: SAM 12; Type: SAM; Serial: 1043
- Measurement SW: DASY4, V4.5 Build 19; Postprocessing SW: SEMCAD, V1.8 Build 146

Touch position - Low/Area Scan (61x91x1): Measurement grid: dx=15mm, dy=15mm
Maximum value of SAR (interpolated) = 0.503 mW/g

Touch position - Low/Zoom Scan (7x7x7) (7x7x7)/Cube 0: Measurement grid: dx=5mm, dy=5mm, dz=5mm
Reference Value = 24.6 V/m; Power Drift = 0.047 dB
Peak SAR (extrapolated) = 0.581 W/kg
SAR(1 g) = 0.473 mW/g; SAR(10 g) = 0.356 mW/g
Maximum value of SAR (measured) = 0.498 mW/g

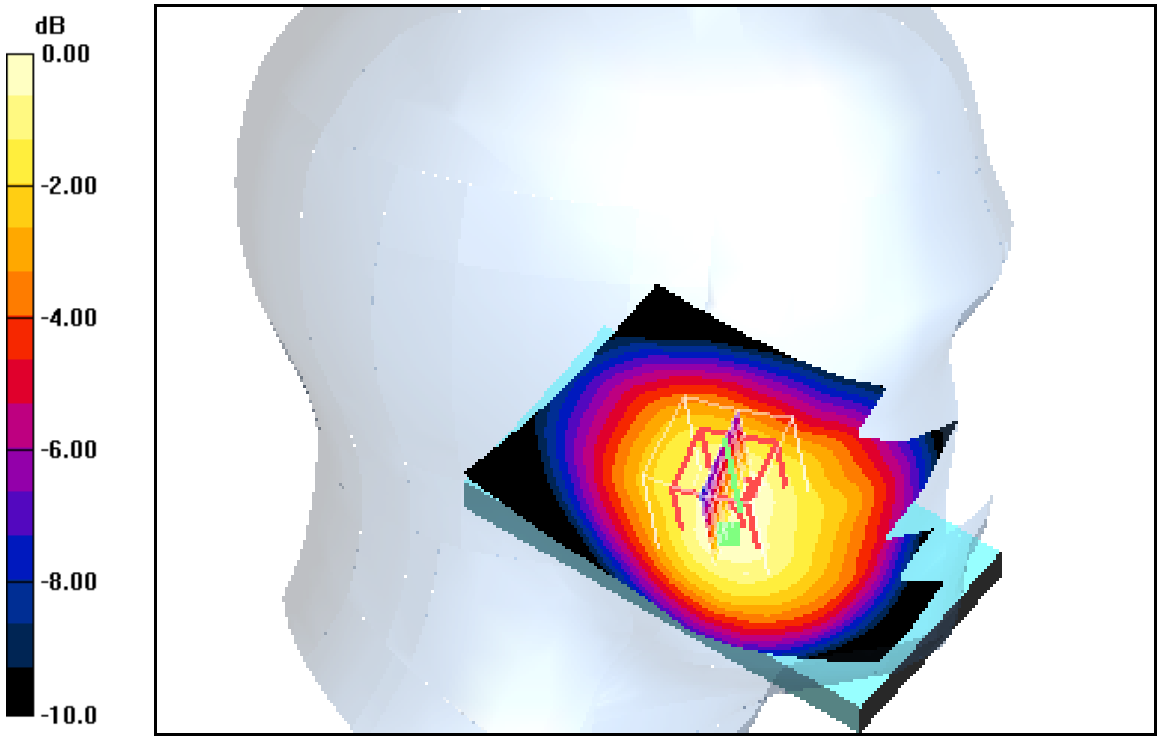

0 dB = 0.498mW/g

Additional information:
ambient temperature: 22.4°C; liquid temperature: 21.9°C

Date/Time: 30.11.2011 11:07:02Date/Time: 30.11.2011 11:18:04

IEEE1528_OET65-LeftHandSide-GSM850

DUT: Sony Ericsson; Type: AAD-3880136-BV; Serial: CB511VCC34
Communication System: GSM 850; Frequency: 836.6 MHz; Duty Cycle: 1:8
Medium: HSL850 Medium parameters used: f = 836.6 MHz; σ = 0.91 mho/m; ε_r = 42.4; ρ = 1000 kg/m^3
Phantom section: Left Section
DASY4 Configuration:
- Probe: ET3DV6 - SN1558; ConvF(5.95, 5.95, 5.95); Calibrated: 23.08.2011
- Sensor-Surface: 4mm (Mechanical And Optical Surface Detection)
- Electronics: DAE3 Sn413; Calibrated: 13.01.2011
- Phantom: SAM 12; Type: SAM; Serial: 1043
- Measurement SW: DASY4, V4.5 Build 19; Postprocessing SW: SEMCAD, V1.8 Build 146

Touch position - Middle/Area Scan (61x91x1): Measurement grid: dx=15mm, dy=15mm
Maximum value of SAR (interpolated) = 0.719 mW/g

Touch position - Middle/Zoom Scan (7x7x7) (7x7x7)/Cube 0: Measurement grid: dx=5mm, dy=5mm, dz=5mm
Reference Value = 29.4 V/m; Power Drift = -0.059 dB
Peak SAR (extrapolated) = 0.872 W/kg
SAR(1 g) = 0.685 mW/g; SAR(10 g) = 0.509 mW/g
Maximum value of SAR (measured) = 0.719 mW/g

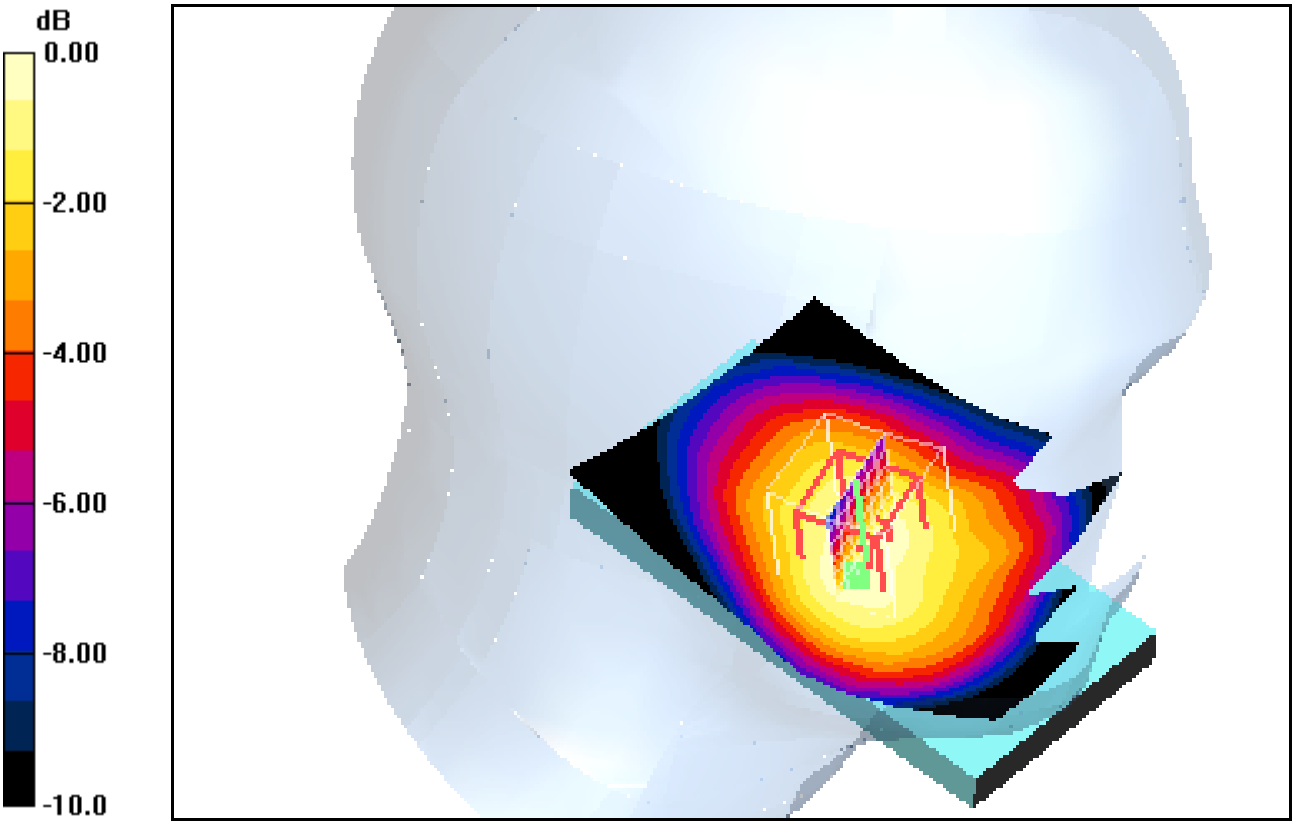

0 dB = 0.719mW/g

Additional information:
ambient temperature: 22.4°C; liquid temperature: 21.9°C

Date/Time: 30.11.2011 11:32:49Date/Time: 30.11.2011 11:40:47

IEEE1528_OET65-LeftHandSide-GSM850

DUT: Sony Ericsson; Type: AAD-3880136-BV; Serial: CB511VCC34
Communication System: GSM 850; Frequency: 848.8 MHz; Duty Cycle: 1:8
Medium: HSL850 Medium parameters used: f = 848.8 MHz; σ = 0.92 mho/m; ε_r = 42.2; ρ = 1000 kg/m^3
Phantom section: Left Section
DASY4 Configuration:
- Probe: ET3DV6 - SN1558; ConvF(5.95, 5.95, 5.95); Calibrated: 23.08.2011
- Sensor-Surface: 4mm (Mechanical And Optical Surface Detection)
- Electronics: DAE3 Sn413; Calibrated: 13.01.2011
- Phantom: SAM 12; Type: SAM; Serial: 1043
- Measurement SW: DASY4, V4.5 Build 19; Postprocessing SW: SEMCAD, V1.8 Build 146

Touch position - High/Area Scan (61x91x1): Measurement grid: dx=15mm, dy=15mm

Maximum value of SAR (interpolated) = 0.798 mW/g

Touch position - High/Zoom Scan (7x7x7) (7x7x7)/Cube 0: Measurement grid: dx=5mm, dy=5mm, dz=5mm

Reference Value = 30.8 V/m; Power Drift = -0.042 dB
Peak SAR (extrapolated) = 0.966 W/kg
SAR(1 g) = 0.759 mW/g; SAR(10 g) = 0.565 mW/g
Maximum value of SAR (measured) = 0.800 mW/g

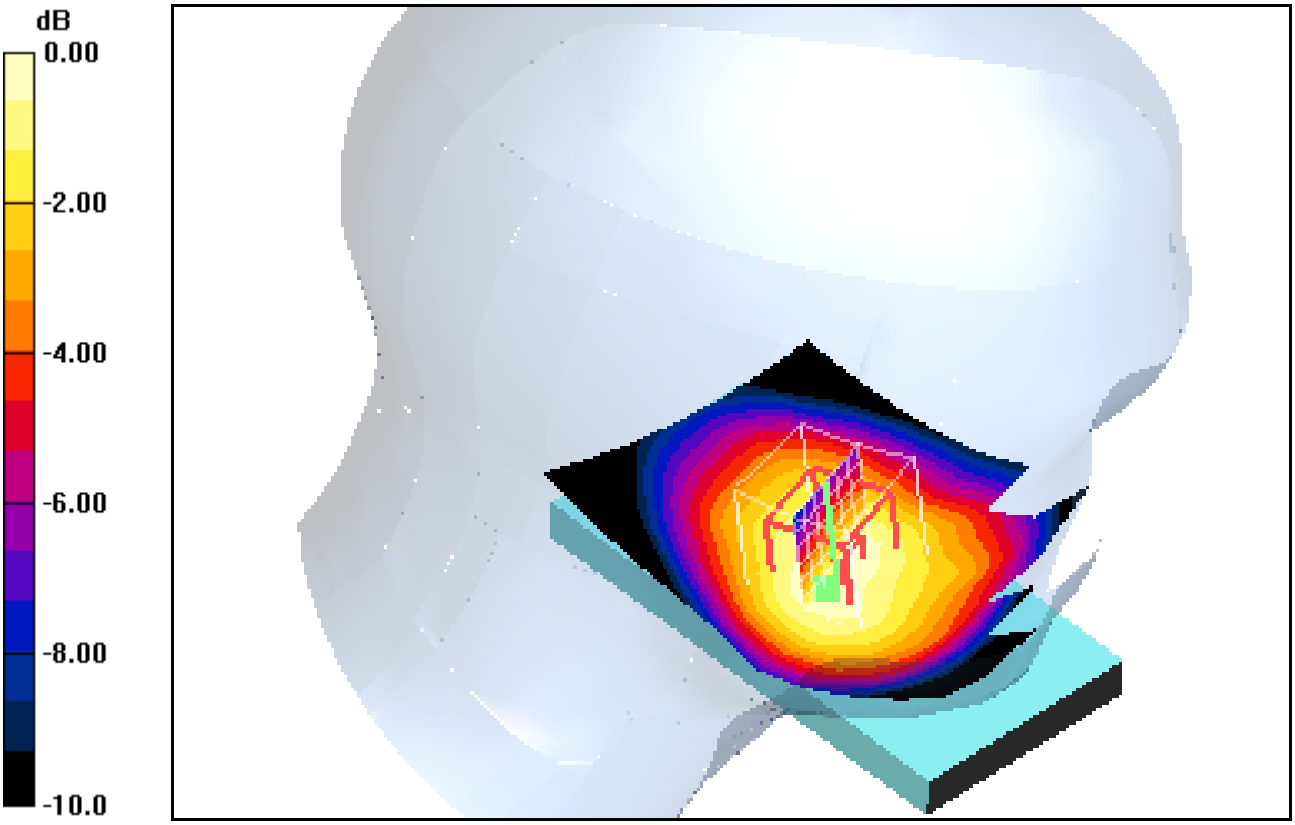

0 dB = 0.800mW/g

Additional information:
ambient temperature: 22.4°C; liquid temperature: 21.9°C

Date/Time: 30.11.2011 14:26:39Date/Time: 30.11.2011 14:34:55

IEEE1528_OET65-LeftHandSide-GSM850

DUT: Sony Ericsson; Type: AAD-3880136-BV; Serial: CB511VCC34
Communication System: GSM 850; Frequency: 824.2 MHz; Duty Cycle: 1:8
Medium: HSL850 Medium parameters used: f = 824.2 MHz; σ = 0.89 mho/m; ε_r = 42.5; ρ = 1000 kg/m^3
Phantom section: Left Section
DASY4 Configuration:
- Probe: ET3DV6 - SN1558; ConvF(5.95, 5.95, 5.95); Calibrated: 23.08.2011
- Sensor-Surface: 4mm (Mechanical And Optical Surface Detection)
- Electronics: DAE3 Sn413; Calibrated: 13.01.2011
- Phantom: SAM 12; Type: SAM; Serial: 1043
- Measurement SW: DASY4, V4.5 Build 19; Postprocessing SW: SEMCAD, V1.8 Build 146

Tilt position - Low/Area Scan (61x81x1): Measurement grid: dx=15mm, dy=15mm

Maximum value of SAR (interpolated) = 0.236 mW/g

Tilt position - Low/Zoom Scan (7x7x7) (7x11x7)/Cube 0: Measurement grid: dx=5mm, dy=5mm, dz=5mm

Reference Value = 16.9 V/m; Power Drift = -0.033 dB
Peak SAR (extrapolated) = 0.282 W/kg
SAR(1 g) = 0.232 mW/g; SAR(10 g) = 0.176 mW/g
Maximum value of SAR (measured) = 0.242 mW/g

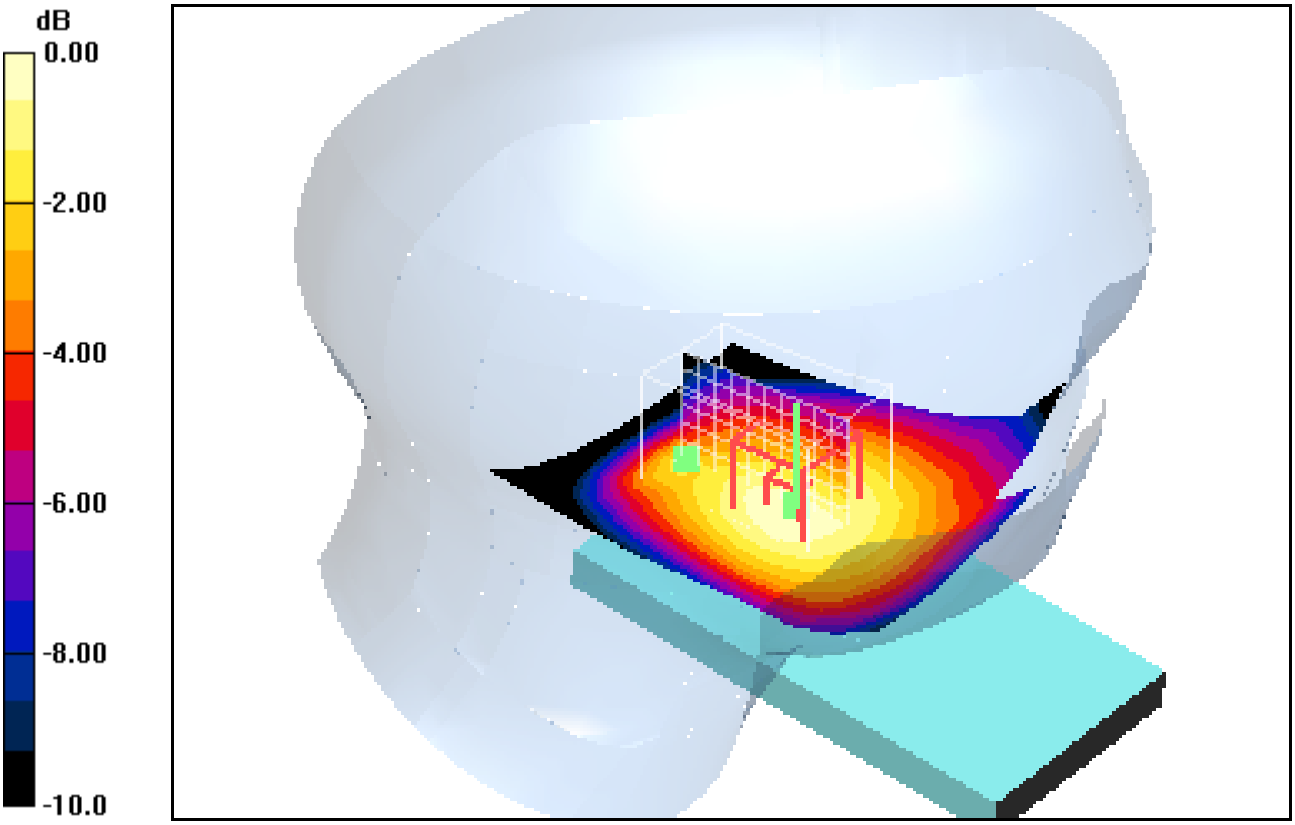

0 dB = 0.242mW/g

Additional information:
ambient temperature: 22.4°C; liquid temperature: 21.9°C

Date/Time: 30.11.2011 14:54:48Date/Time: 30.11.2011 15:02:37

IEEE1528_OET65-LeftHandSide-GSM850

DUT: Sony Ericsson; Type: AAD-3880136-BV; Serial: CB511VCC34
Communication System: GSM 850; Frequency: 836.6 MHz; Duty Cycle: 1:8
Medium: HSL850 Medium parameters used: f = 836.6 MHz; σ = 0.91 mho/m; ε_r = 42.4; ρ = 1000 kg/m^3
Phantom section: Left Section
DASY4 Configuration:
- Probe: ET3DV6 - SN1558; ConvF(5.95, 5.95, 5.95); Calibrated: 23.08.2011
- Sensor-Surface: 4mm (Mechanical And Optical Surface Detection)
- Electronics: DAE3 Sn413; Calibrated: 13.01.2011
- Phantom: SAM 12; Type: SAM; Serial: 1043
- Measurement SW: DASY4, V4.5 Build 19; Postprocessing SW: SEMCAD, V1.8 Build 146

Tilt position - Middle/Area Scan (61x81x1): Measurement grid: dx=15mm, dy=15mm

Maximum value of SAR (interpolated) = 0.347 mW/g

Tilt position - Middle/Zoom Scan (7x7x7) (7x11x7)/Cube 0: Measurement grid: dx=5mm, dy=5mm, dz=5mm

Reference Value = 20.0 V/m; Power Drift = 0.051 dB
Peak SAR (extrapolated) = 0.410 W/kg
SAR(1 g) = 0.339 mW/g; SAR(10 g) = 0.256 mW/g
Maximum value of SAR (measured) = 0.356 mW/g

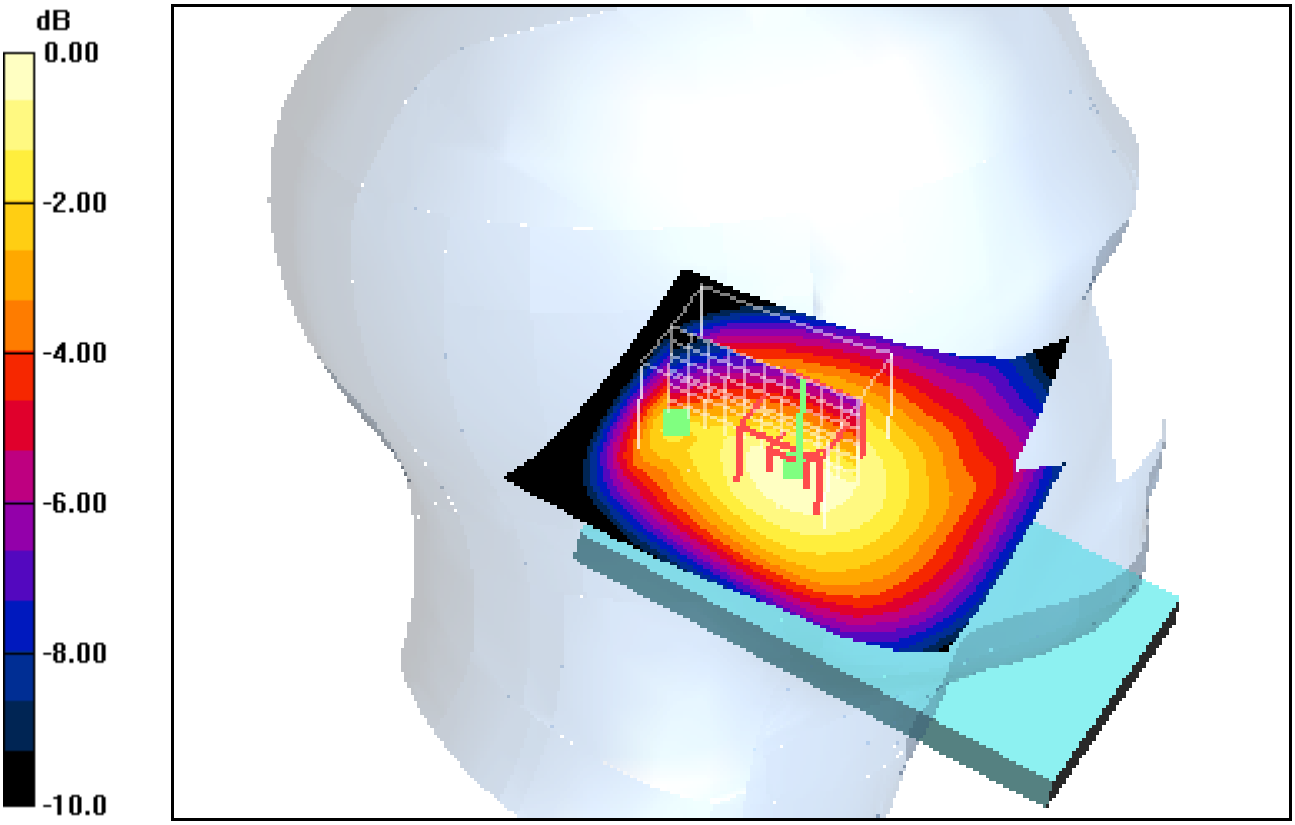

0 dB = 0.356mW/g

Additional information:
ambient temperature: 22.4°C; liquid temperature: 21.9°C

Date/Time: 30.11.2011 15:22:26Date/Time: 30.11.2011 15:29:32

IEEE1528_OET65-LeftHandSide-GSM850

DUT: Sony Ericsson; Type: AAD-3880136-BV; Serial: CB511VCC34
Communication System: GSM 850; Frequency: 848.8 MHz; Duty Cycle: 1:8
Medium: HSL850 Medium parameters used: f = 848.8 MHz; σ = 0.92 mho/m; ε_r = 42.2; ρ = 1000 kg/m^3
Phantom section: Left Section
DASY4 Configuration:
- Probe: ET3DV6 - SN1558; ConvF(5.95, 5.95, 5.95); Calibrated: 23.08.2011
- Sensor-Surface: 4mm (Mechanical And Optical Surface Detection)
- Electronics: DAE3 Sn413; Calibrated: 13.01.2011
- Phantom: SAM 12; Type: SAM; Serial: 1043
- Measurement SW: DASY4, V4.5 Build 19; Postprocessing SW: SEMCAD, V1.8 Build 146

Tilt position - High/Area Scan (61x81x1): Measurement grid: dx=15mm, dy=15mm
Maximum value of SAR (interpolated) = 0.441 mW/g

Tilt position - High/Zoom Scan (7x7x7) (7x11x7)/Cube 0: Measurement grid: dx=5mm, dy=5mm, dz=5mm
Reference Value = 22.5 V/m; Power Drift = 0.00 dB
Peak SAR (extrapolated) = 0.532 W/kg
SAR(1 g) = 0.432 mW/g; SAR(10 g) = 0.324 mW/g
Maximum value of SAR (measured) = 0.455 mW/g

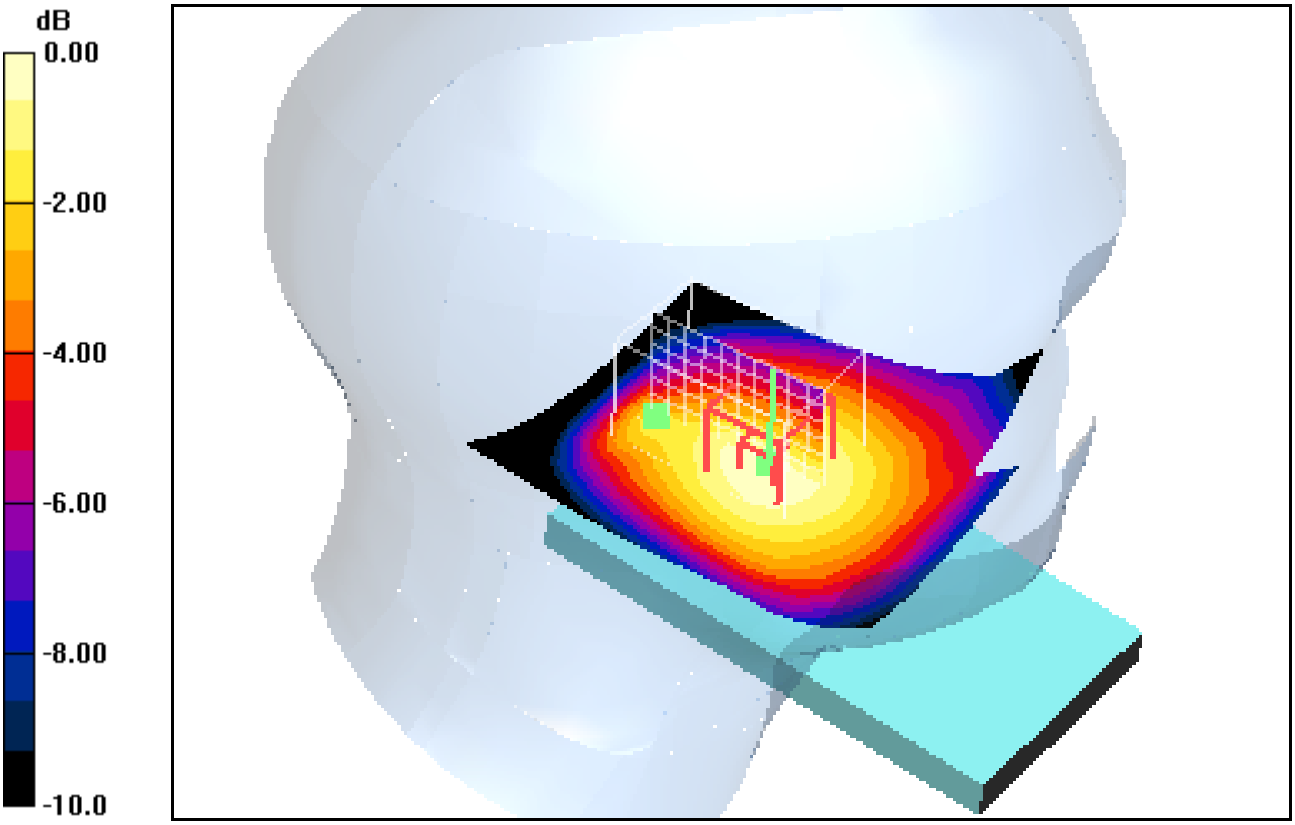

0 dB = 0.455mW/g

Additional information:
ambient temperature: 22.4°C; liquid temperature: 21.9°C

Date/Time: 30.11.2011 15:53:06Date/Time: 30.11.2011 16:00:28

IEEE1528_OET65-RightHandSide-GSM850

DUT: Sony Ericsson; Type: AAD-3880136-BV; Serial: CB511VCC34
Communication System: GSM 850; Frequency: 824.2 MHz; Duty Cycle: 1:8
Medium: HSL850 Medium parameters used: f = 824.2 MHz; σ = 0.89 mho/m; ε_r = 42.5; ρ = 1000 kg/m^3
Phantom section: Right Section
DASY4 Configuration:
- Probe: ET3DV6 - SN1558; ConvF(5.95, 5.95, 5.95); Calibrated: 23.08.2011
- Sensor-Surface: 4mm (Mechanical And Optical Surface Detection)
- Electronics: DAE3 Sn413; Calibrated: 13.01.2011
- Phantom: SAM 12; Type: SAM; Serial: 1043
- Measurement SW: DASY4, V4.5 Build 19; Postprocessing SW: SEMCAD, V1.8 Build 146

Touch position - Low/Area Scan (61x91x1): Measurement grid: dx=15mm, dy=15mm

Maximum value of SAR (interpolated) = 0.498 mW/g

Touch position - Low/Zoom Scan (7x7x7) (7x7x7)/Cube 0: Measurement grid: dx=5mm, dy=5mm, dz=5mm

Reference Value = 23.6 V/m; Power Drift = 0.042 dB
Peak SAR (extrapolated) = 0.606 W/kg
SAR(1 g) = 0.479 mW/g; SAR(10 g) = 0.362 mW/g
Maximum value of SAR (measured) = 0.505 mW/g

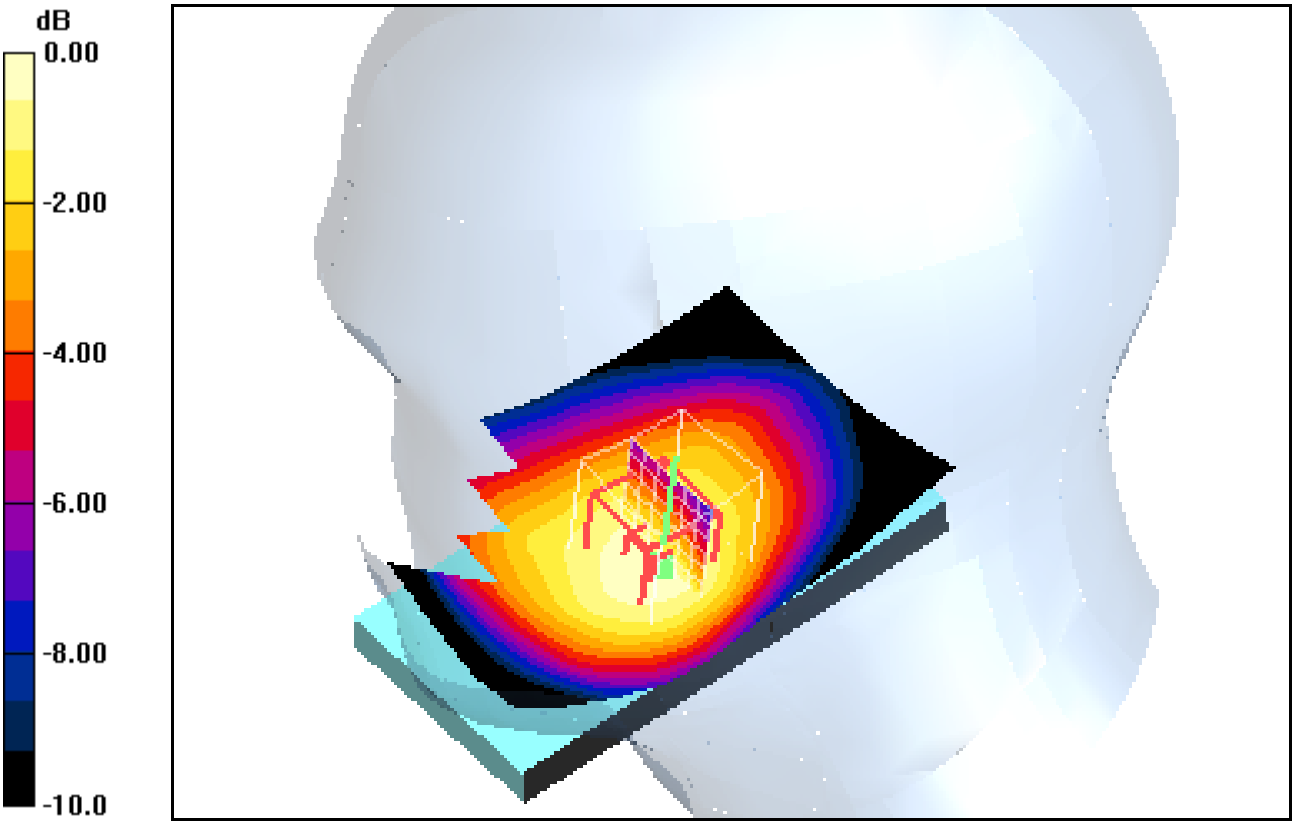

0 dB = 0.505mW/g

Additional information:
ambient temperature: 23.3°C; liquid temperature: 22.4°C

Date/Time: 30.11.2011 16:13:44Date/Time: 30.11.2011 16:21:50

IEEE1528_OET65-RightHandSide-GSM850

DUT: Sony Ericsson; Type: AAD-3880136-BV; Serial: CB511VCC34
Communication System: GSM 850; Frequency: 836.6 MHz; Duty Cycle: 1:8
Medium: HSL850 Medium parameters used: f = 836.6 MHz; σ = 0.91 mho/m; ε_r = 42.4; ρ = 1000 kg/m^3
Phantom section: Right Section
DASY4 Configuration:
- Probe: ET3DV6 - SN1558; ConvF(5.95, 5.95, 5.95); Calibrated: 23.08.2011
- Sensor-Surface: 4mm (Mechanical And Optical Surface Detection)
- Electronics: DAE3 Sn413; Calibrated: 13.01.2011
- Phantom: SAM 12; Type: SAM; Serial: 1043
- Measurement SW: DASY4, V4.5 Build 19; Postprocessing SW: SEMCAD, V1.8 Build 146

Touch position - Middle/Area Scan (61x91x1): Measurement grid: dx=15mm, dy=15mm
Maximum value of SAR (interpolated) = 0.737 mW/g

Touch position - Middle/Zoom Scan (7x7x7) (7x7x7)/Cube 0: Measurement grid: dx=5mm, dy=5mm, dz=5mm
Reference Value = 28.4 V/m; Power Drift = 0.087 dB
Peak SAR (extrapolated) = 0.894 W/kg
SAR(1 g) = 0.693 mW/g; SAR(10 g) = 0.525 mW/g
Maximum value of SAR (measured) = 0.737 mW/g

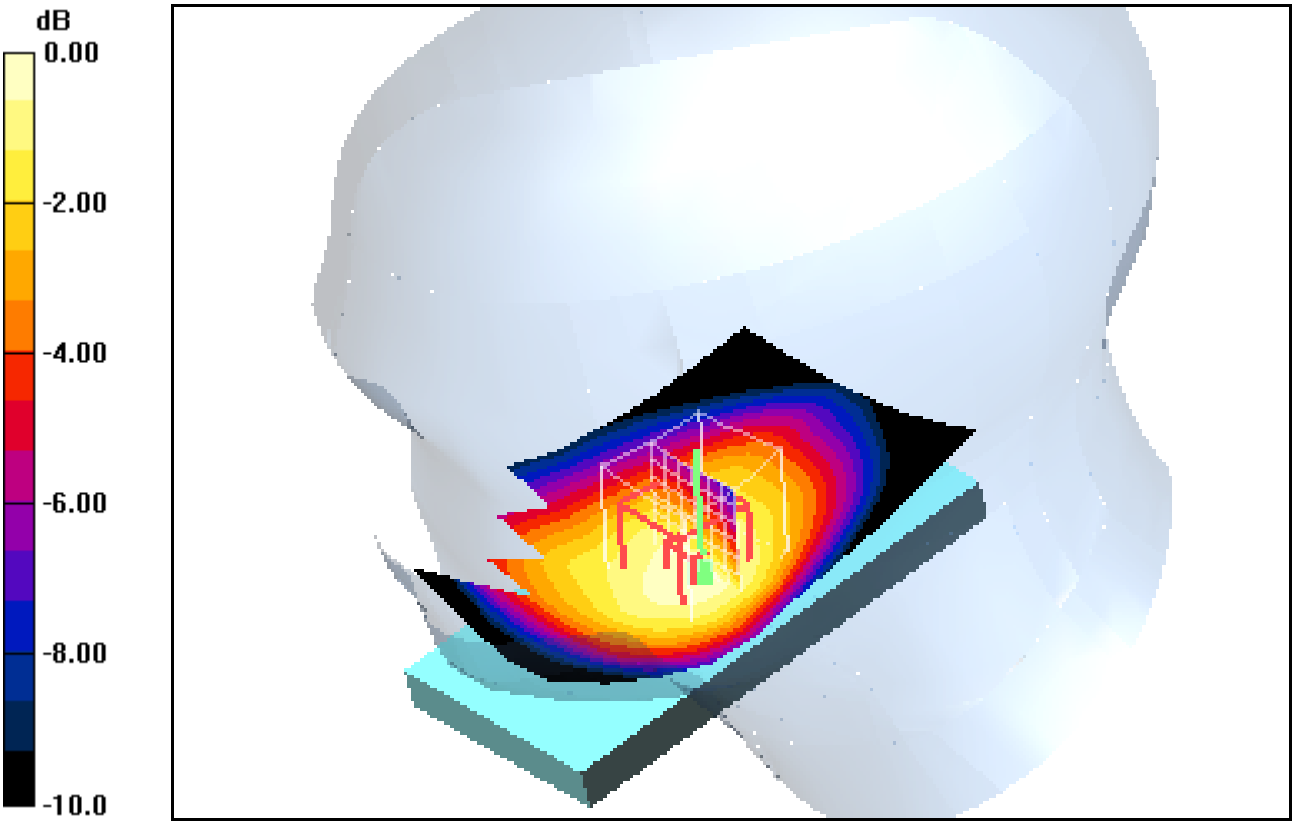

0 dB = 0.737mW/g

Additional information:
ambient temperature: 23.3°C; liquid temperature: 22.4°C

Date/Time: 30.11.2011 16:36:24Date/Time: 30.11.2011 16:43:19

IEEE1528_OET65-RightHandSide-GSM850

DUT: Sony Ericsson; Type: AAD-3880136-BV; Serial: CB511VCC34
Communication System: GSM 850; Frequency: 848.8 MHz; Duty Cycle: 1:8
Medium: HSL850 Medium parameters used: f = 848.8 MHz; σ = 0.92 mho/m; ε_r = 42.2; ρ = 1000 kg/m^3
Phantom section: Right Section
DASY4 Configuration:
- Probe: ET3DV6 - SN1558; ConvF(5.95, 5.95, 5.95); Calibrated: 23.08.2011
- Sensor-Surface: 4mm (Mechanical And Optical Surface Detection)
- Electronics: DAE3 Sn413; Calibrated: 13.01.2011
- Phantom: SAM 12; Type: SAM; Serial: 1043
- Measurement SW: DASY4, V4.5 Build 19; Postprocessing SW: SEMCAD, V1.8 Build 146

Touch position - High/Area Scan (61x91x1): Measurement grid: dx=15mm, dy=15mm

Maximum value of SAR (interpolated) = 0.813 mW/g

Touch position - High/Zoom Scan (7x7x7) (7x7x7)/Cube 0: Measurement grid: dx=5mm, dy=5mm, dz=5mm

Reference Value = 29.8 V/m; Power Drift = 0.052 dB
Peak SAR (extrapolated) = 0.996 W/kg
SAR(1 g) = 0.779 mW/g; SAR(10 g) = 0.587 mW/g
Maximum value of SAR (measured) = 0.823 mW/g

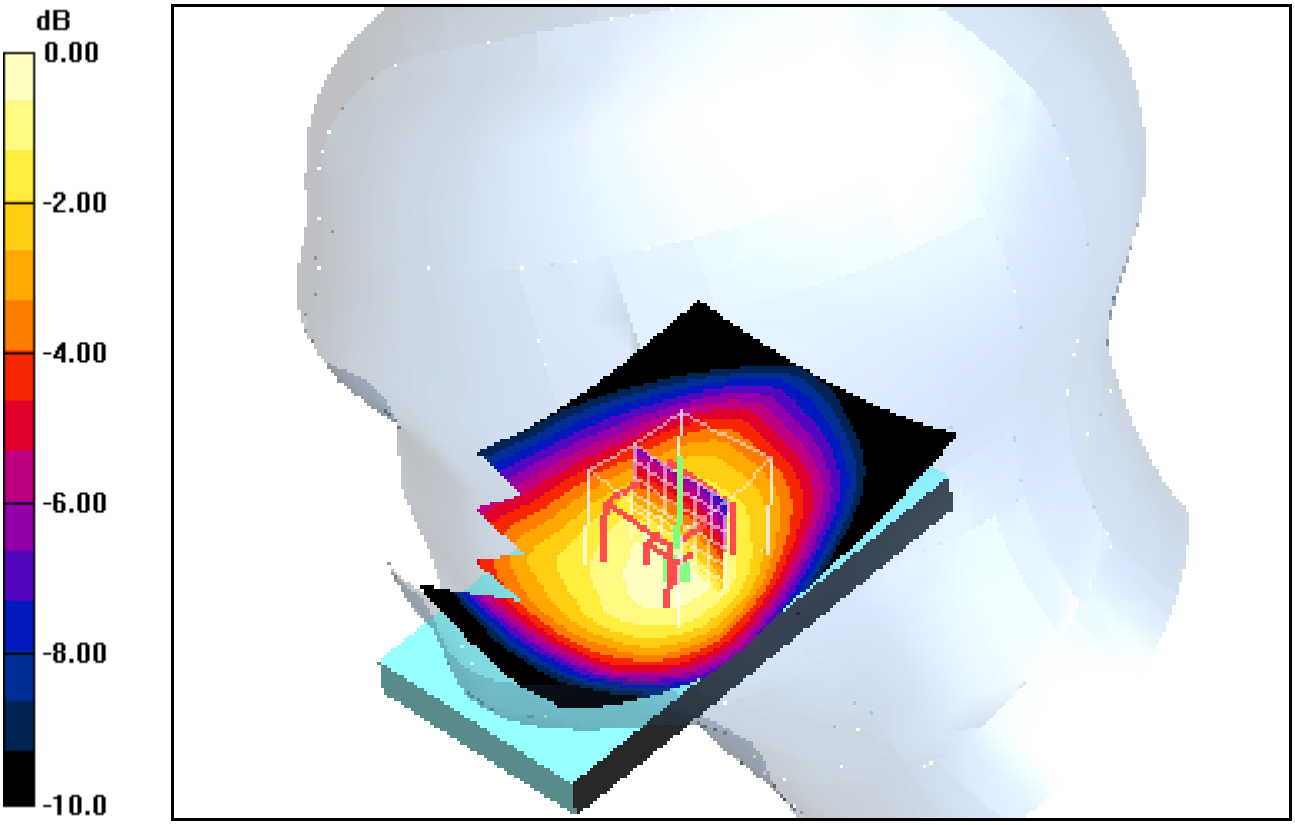

0 dB = 0.823mW/g

Additional information:
ambient temperature: 23.3°C; liquid temperature: 22.4°C

Date/Time: 01.12.2011 09:38:27Date/Time: 01.12.2011 09:46:40

IEEE1528_OET65-RightHandSide-GSM850

DUT: Sony Ericsson; Type: AAD-3880136-BV; Serial: CB511VCC34
Communication System: GSM 850; Frequency: 824.2 MHz; Duty Cycle: 1:8
Medium: HSL850 Medium parameters used: f = 824.2 MHz; σ = 0.89 mho/m; ε_r = 42.5; ρ = 1000 kg/m^3
Phantom section: Right Section
DASY4 Configuration:
- Probe: ET3DV6 - SN1558; ConvF(5.95, 5.95, 5.95); Calibrated: 23.08.2011
- Sensor-Surface: 4mm (Mechanical And Optical Surface Detection)
- Electronics: DAE3 Sn413; Calibrated: 13.01.2011
- Phantom: SAM 12; Type: SAM; Serial: 1043
- Measurement SW: DASY4, V4.5 Build 19; Postprocessing SW: SEMCAD, V1.8 Build 146

Tilt position - Low/Area Scan (61x91x1): Measurement grid: dx=15mm, dy=15mm

Maximum value of SAR (interpolated) = 0.228 mW/g

Tilt position - Low/Zoom Scan (7x7x7) (7x11x7)/Cube 0: Measurement grid: dx=5mm, dy=5mm, dz=5mm

Reference Value = 16.6 V/m; Power Drift = 0.027 dB
Peak SAR (extrapolated) = 0.270 W/kg
SAR(1 g) = 0.223 mW/g; SAR(10 g) = 0.170 mW/g
Maximum value of SAR (measured) = 0.233 mW/g

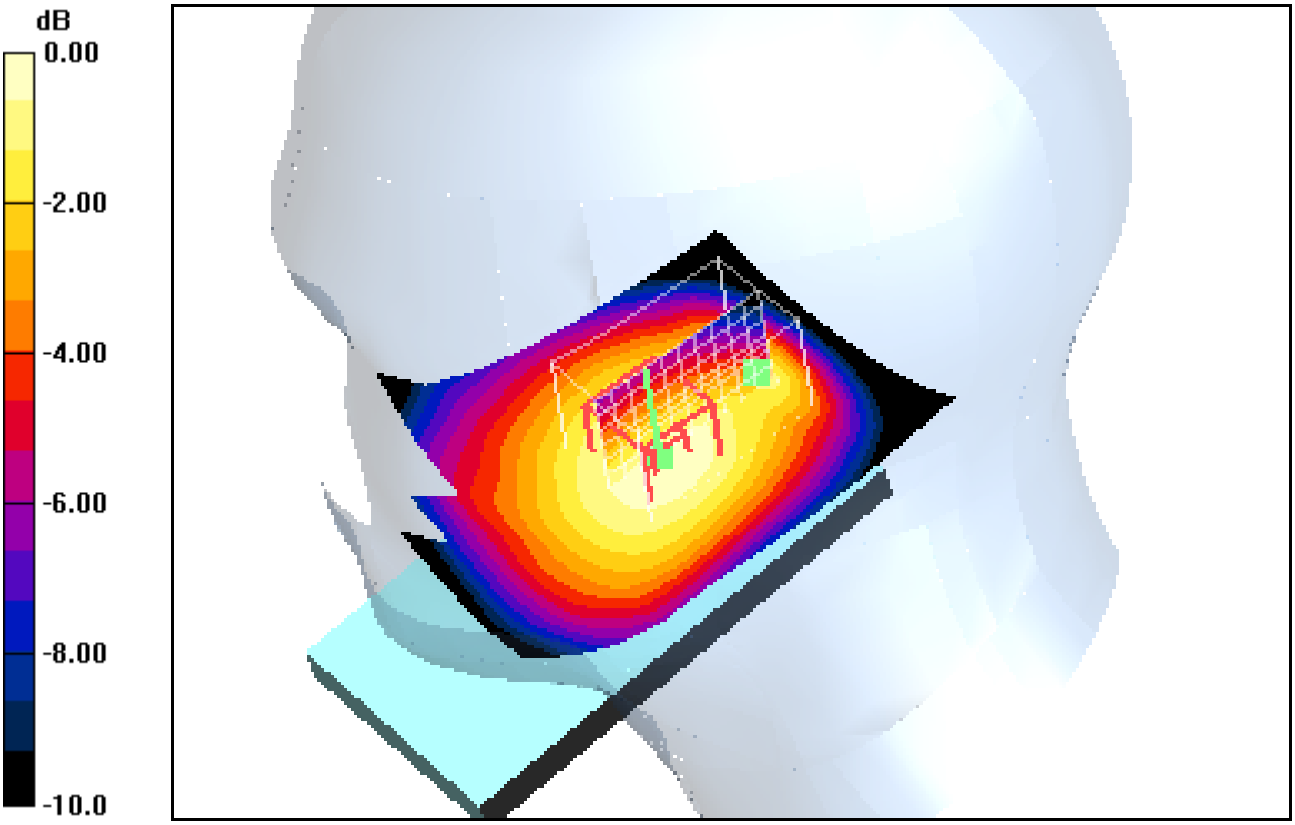

0 dB = 0.233mW/g

Additional information:
ambient temperature: 23.3°C; liquid temperature: 22.4°C

Date/Time: 01.12.2011 10:05:55Date/Time: 01.12.2011 10:14:19

IEEE1528_OET65-RightHandSide-GSM850

DUT: Sony Ericsson; Type: AAD-3880136-BV; Serial: CB511VCC34
Communication System: GSM 850; Frequency: 836.6 MHz; Duty Cycle: 1:8
Medium: HSL850 Medium parameters used: f = 836.6 MHz; σ = 0.91 mho/m; ε_r = 42.4; ρ = 1000 kg/m^3
Phantom section: Right Section
DASY4 Configuration:
- Probe: ET3DV6 - SN1558; ConvF(5.95, 5.95, 5.95); Calibrated: 23.08.2011
- Sensor-Surface: 4mm (Mechanical And Optical Surface Detection)
- Electronics: DAE3 Sn413; Calibrated: 13.01.2011
- Phantom: SAM 12; Type: SAM; Serial: 1043
- Measurement SW: DASY4, V4.5 Build 19; Postprocessing SW: SEMCAD, V1.8 Build 146

Tilt position - Middle/Area Scan (61x91x1): Measurement grid: dx=15mm, dy=15mm

Maximum value of SAR (interpolated) = 0.346 mW/g

Tilt position - Middle/Zoom Scan (7x7x7) (7x11x7)/Cube 0: Measurement grid: dx=5mm, dy=5mm, dz=5mm

Reference Value = 20.3 V/m; Power Drift = 0.00 dB
Peak SAR (extrapolated) = 0.414 W/kg
SAR(1 g) = 0.338 mW/g; SAR(10 g) = 0.256 mW/g
Maximum value of SAR (measured) = 0.354 mW/g

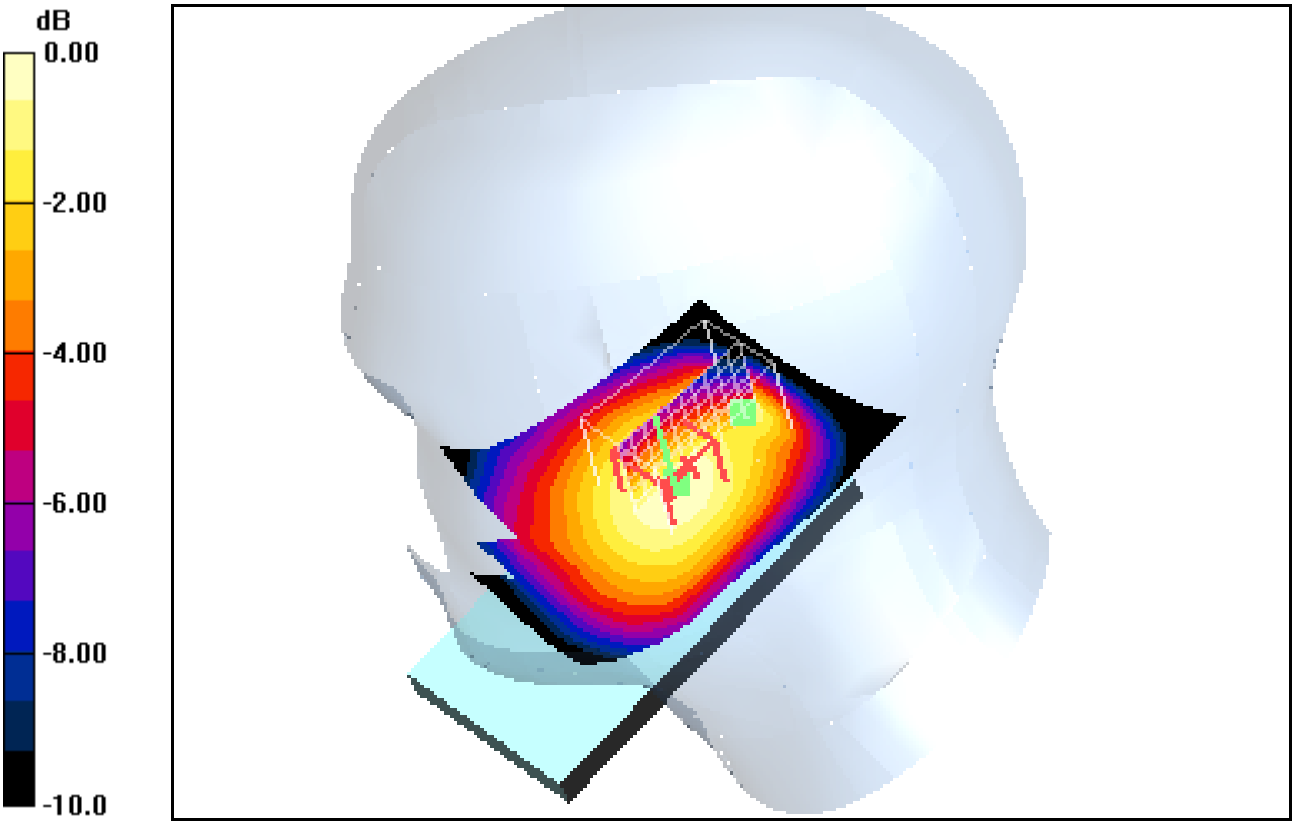

0 dB = 0.354mW/g

Additional information:
ambient temperature: 23.3°C; liquid temperature: 22.4°C

Date/Time: 01.12.2011 10:33:36Date/Time: 01.12.2011 10:40:56

IEEE1528_OET65-RightHandSide-GSM850

DUT: Sony Ericsson; Type: AAD-3880136-BV; Serial: CB511VCC34
Communication System: GSM 850; Frequency: 848.8 MHz; Duty Cycle: 1:8
Medium: HSL850 Medium parameters used: f = 848.8 MHz; σ = 0.92 mho/m; ε_r = 42.2; ρ = 1000 kg/m^3
Phantom section: Right Section
DASY4 Configuration:
- Probe: ET3DV6 - SN1558; ConvF(5.95, 5.95, 5.95); Calibrated: 23.08.2011
- Sensor-Surface: 4mm (Mechanical And Optical Surface Detection)
- Electronics: DAE3 Sn413; Calibrated: 13.01.2011
- Phantom: SAM 12; Type: SAM; Serial: 1043
- Measurement SW: DASY4, V4.5 Build 19; Postprocessing SW: SEMCAD, V1.8 Build 146

Tilt position - High/Area Scan (61x91x1): Measurement grid: dx=15mm, dy=15mm
Maximum value of SAR (interpolated) = 0.443 mW/g

Tilt position - High/Zoom Scan (7x7x7) (7x11x7)/Cube 0: Measurement grid: dx=5mm, dy=5mm, dz=5mm
Reference Value = 22.6 V/m; Power Drift = 0.037 dB
Peak SAR (extrapolated) = 0.528 W/kg
SAR(1 g) = 0.426 mW/g; SAR(10 g) = 0.322 mW/g
Maximum value of SAR (measured) = 0.446 mW/g

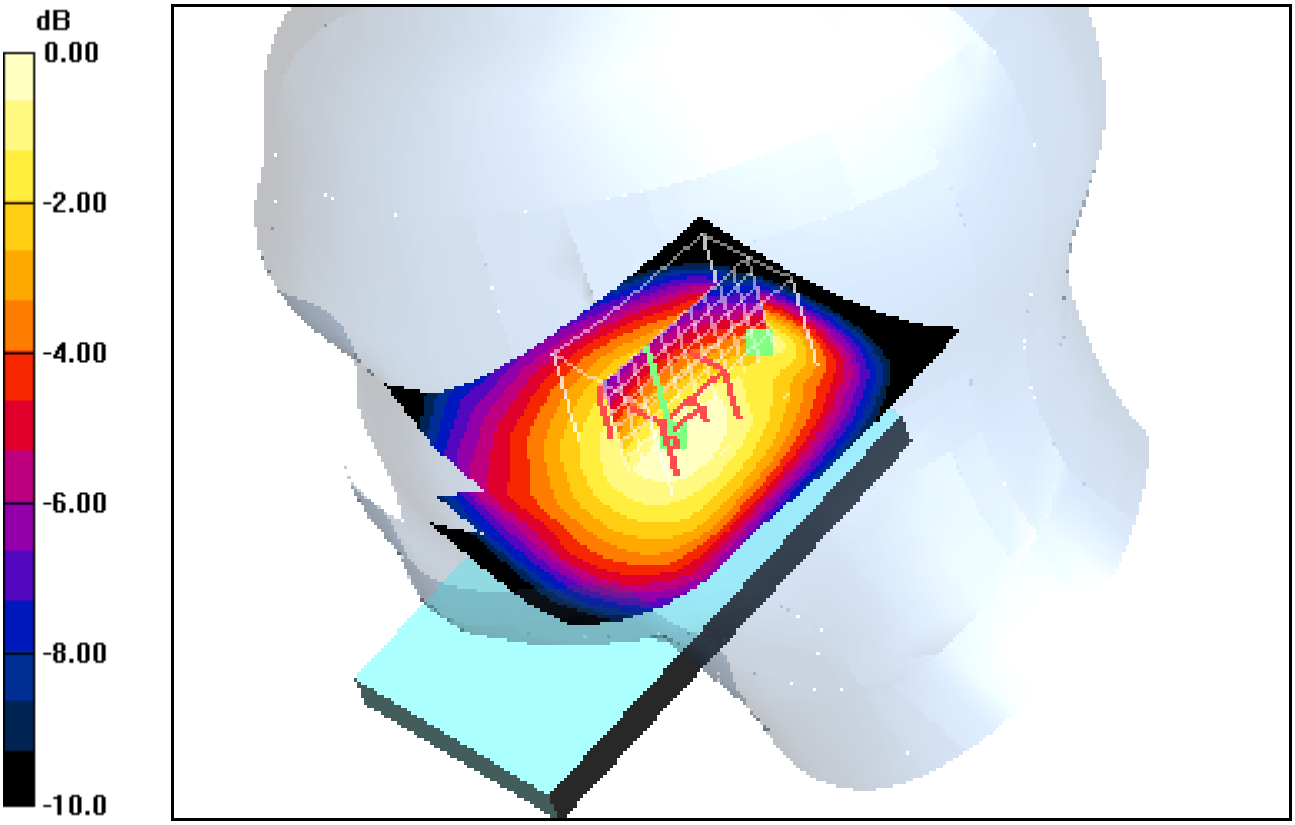

0 dB = 0.446mW/g

Additional information:
ambient temperature: 23.3°C; liquid temperature: 22.4°C

Annex B.2: GSM 850MHz body

Date/Time: 04.12.2011 11:09:35Date/Time: 04.12.2011 11:17:59

IEEE1528_OET65-Body-GSM850 GPRS 4TS

DUT: Sony Ericsson; Type: AAD-3880136-BV; Serial: CB511VCC34
Communication System: PCS 850 GPRS 4TS; Frequency: 824.2 MHz; Duty Cycle: 1:2
Medium: M850 Medium parameters used: f = 824.2 MHz; σ = 0.99 mho/m; ε_r = 55.2; ρ = 1000 kg/m^3
Phantom section: Flat Section
DASY4 Configuration:
- Probe: ET3DV6 - SN1558; ConvF(5.85, 5.85, 5.85); Calibrated: 23.08.2011
- Sensor-Surface: 4mm (Mechanical And Optical Surface Detection)
- Electronics: DAE3 Sn413; Calibrated: 13.01.2011
- Phantom: SAM 12; Type: SAM; Serial: 1043
- Measurement SW: DASY4, V4.5 Build 19; Postprocessing SW: SEMCAD, V1.8 Build 146

Front position - Low/Area Scan (51x101x1): Measurement grid: dx=15mm, dy=15mm

Maximum value of SAR (interpolated) = 0.545 mW/g

Front position - Low/Zoom Scan (7x7x7) (7x7x7)/Cube 0: Measurement grid: dx=5mm, dy=5mm, dz=5mm

Reference Value = 24.3 V/m; Power Drift = -0.011 dB
Peak SAR (extrapolated) = 0.616 W/kg
SAR(1 g) = 0.521 mW/g; SAR(10 g) = 0.406 mW/g
Maximum value of SAR (measured) = 0.547 mW/g

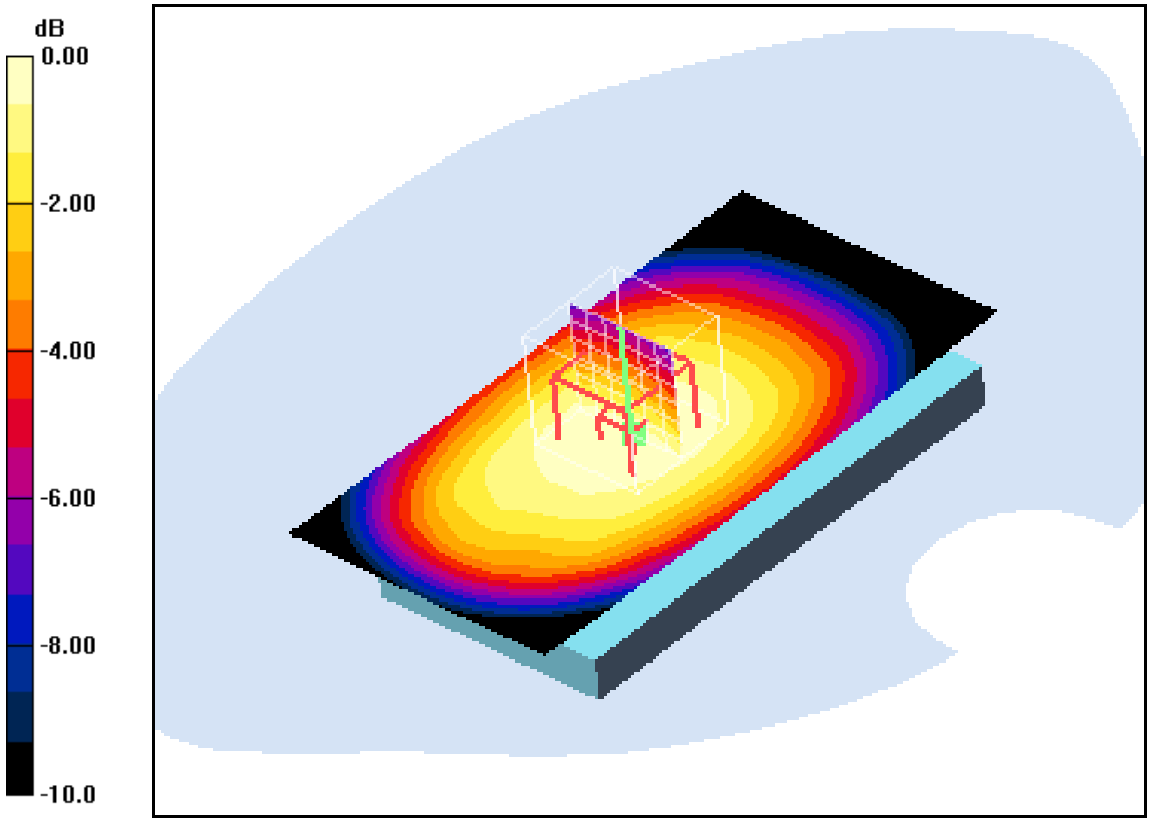

0 dB = 0.547mW/g

Additional information:
position or distance of DUT to SAM: 10 mm
ambient temperature: 23.7°C; liquid temperature: 22.9°C

Date/Time: 04.12.2011 10:46:56Date/Time: 04.12.2011 10:56:42

IEEE1528_OET65-Body-GSM850 GPRS 4TS

DUT: Sony Ericsson; Type: AAD-3880136-BV; Serial: CB511VCC34
Communication System: PCS 850 GPRS 4TS; Frequency: 836.6 MHz; Duty Cycle: 1:2
Medium: M850 Medium parameters used: f = 836.6 MHz; σ = 1 mho/m; ε_r = 55.1; ρ = 1000 kg/m^3
Phantom section: Flat Section
DASY4 Configuration:
- Probe: ET3DV6 - SN1558; ConvF(5.85, 5.85, 5.85); Calibrated: 23.08.2011
- Sensor-Surface: 4mm (Mechanical And Optical Surface Detection)
- Electronics: DAE3 Sn413; Calibrated: 13.01.2011
- Phantom: SAM 12; Type: SAM; Serial: 1043
- Measurement SW: DASY4, V4.5 Build 19; Postprocessing SW: SEMCAD, V1.8 Build 146

Front position - Middle/Area Scan (51x101x1): Measurement grid: dx=15mm, dy=15mm

Maximum value of SAR (interpolated) = 0.890 mW/g

Front position - Middle/Zoom Scan (7x7x7) (7x7x7)/Cube 0: Measurement grid: dx=5mm, dy=5mm, dz=5mm

Reference Value = 30.2 V/m; Power Drift = -0.059 dB
Peak SAR (extrapolated) = 0.983 W/kg
SAR(1 g) = 0.830 mW/g; SAR(10 g) = 0.644 mW/g
Maximum value of SAR (measured) = 0.870 mW/g

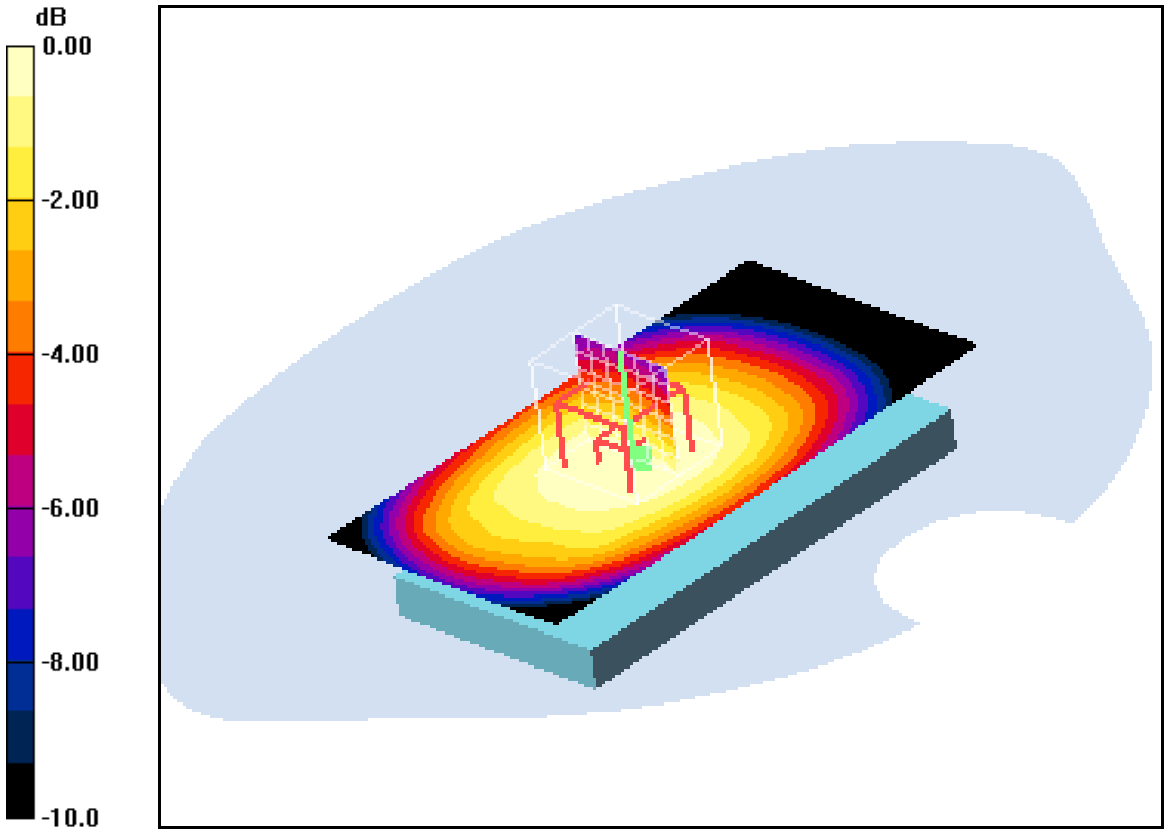

0 dB = 0.870mW/g

Additional information:
position or distance of DUT to SAM: 10 mm
ambient temperature: 23.7°C; liquid temperature: 22.9°C

Date/Time: 04.12.2011 11:32:16Date/Time: 04.12.2011 11:40:18

IEEE1528_OET65-Body-GSM850 GPRS 4TS

DUT: Sony Ericsson; Type: AAD-3880136-BV; Serial: CB511VCC34
Communication System: PCS 850 GPRS 4TS; Frequency: 848.8 MHz; Duty Cycle: 1:2
Medium: M850 Medium parameters used: f = 848.8 MHz; σ = 1.02 mho/m; ε_r = 55; ρ = 1000 kg/m^3
Phantom section: Flat Section
DASY4 Configuration:
- Probe: ET3DV6 - SN1558; ConvF(5.85, 5.85, 5.85); Calibrated: 23.08.2011
- Sensor-Surface: 4mm (Mechanical And Optical Surface Detection)
- Electronics: DAE3 Sn413; Calibrated: 13.01.2011
- Phantom: SAM 12; Type: SAM; Serial: 1043
- Measurement SW: DASY4, V4.5 Build 19; Postprocessing SW: SEMCAD, V1.8 Build 146

Front position - High/Area Scan (51x101x1): Measurement grid: dx=15mm, dy=15mm

Maximum value of SAR (interpolated) = 0.966 mW/g

Front position - High/Zoom Scan (7x7x7) (7x7x7)/Cube 0: Measurement grid: dx=5mm, dy=5mm, dz=5mm

Reference Value = 32.0 V/m; Power Drift = -0.020 dB
Peak SAR (extrapolated) = 1.10 W/kg
SAR(1 g) = 0.924 mW/g; SAR(10 g) = 0.716 mW/g
Maximum value of SAR (measured) = 0.967 mW/g

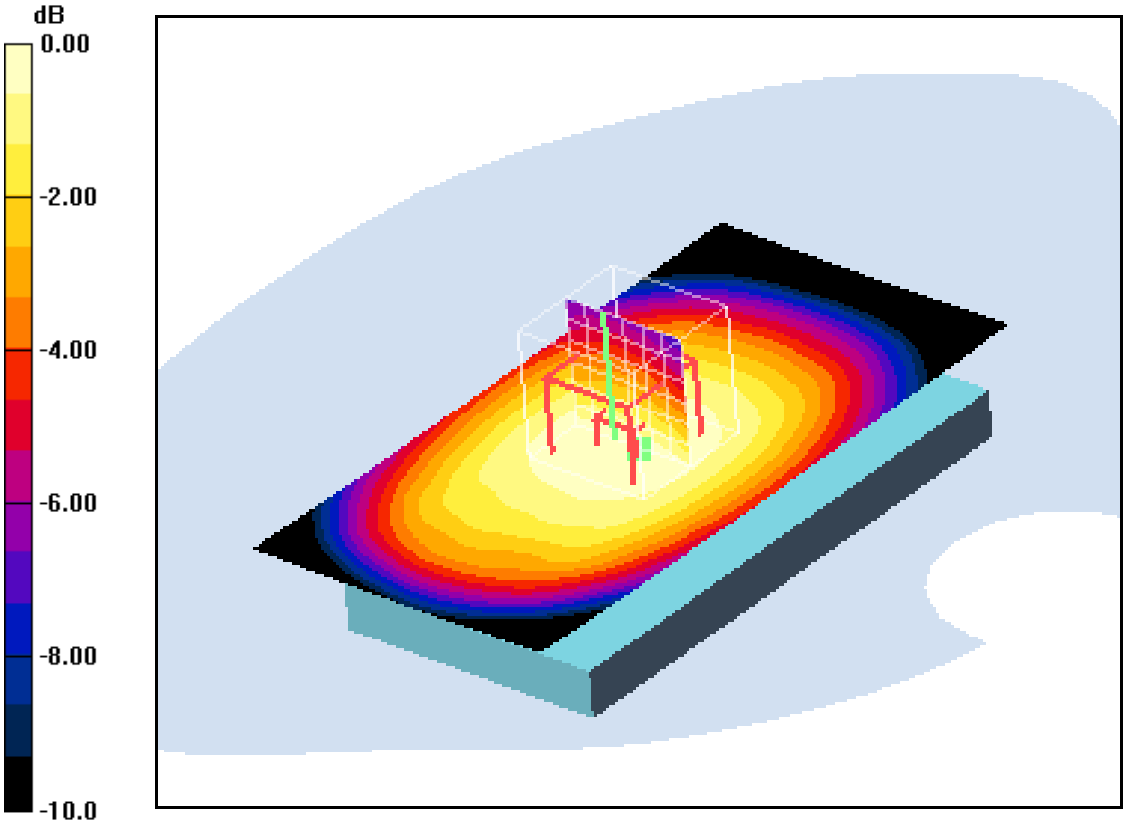

0 dB = 0.967mW/g

Additional information:
position or distance of DUT to SAM: 10 mm
ambient temperature: 23.7°C; liquid temperature: 22.9°C

Date/Time: 03.12.2011 18:57:49Date/Time: 03.12.2011 19:05:48

IEEE1528_OET65-Body-GSM850 GPRS 4TS

DUT: Sony Ericsson; Type: AAD-3880136-BV; Serial: CB511VCC34
Communication System: PCS 850 GPRS 4TS; Frequency: 824.2 MHz; Duty Cycle: 1:2
Medium: M850 Medium parameters used: f = 824.2 MHz; σ = 0.99 mho/m; ε_r = 55.2; ρ = 1000 kg/m^3
Phantom section: Flat Section
DASY4 Configuration:
- Probe: ET3DV6 - SN1558; ConvF(5.85, 5.85, 5.85); Calibrated: 23.08.2011
- Sensor-Surface: 4mm (Mechanical And Optical Surface Detection)
- Electronics: DAE3 Sn413; Calibrated: 13.01.2011
- Phantom: SAM 12; Type: SAM; Serial: 1043
- Measurement SW: DASY4, V4.5 Build 19; Postprocessing SW: SEMCAD, V1.8 Build 146

Rear position - Low/Area Scan (51x101x1): Measurement grid: dx=15mm, dy=15mm

Maximum value of SAR (interpolated) = 0.668 mW/g

Rear position - Low/Zoom Scan (7x7x7) (7x7x7)/Cube 0: Measurement grid: dx=5mm, dy=5mm, dz=5mm

Reference Value = 26.8 V/m; Power Drift = -0.038 dB
Peak SAR (extrapolated) = 0.764 W/kg
SAR(1 g) = 0.624 mW/g; SAR(10 g) = 0.476 mW/g
Maximum value of SAR (measured) = 0.659 mW/g

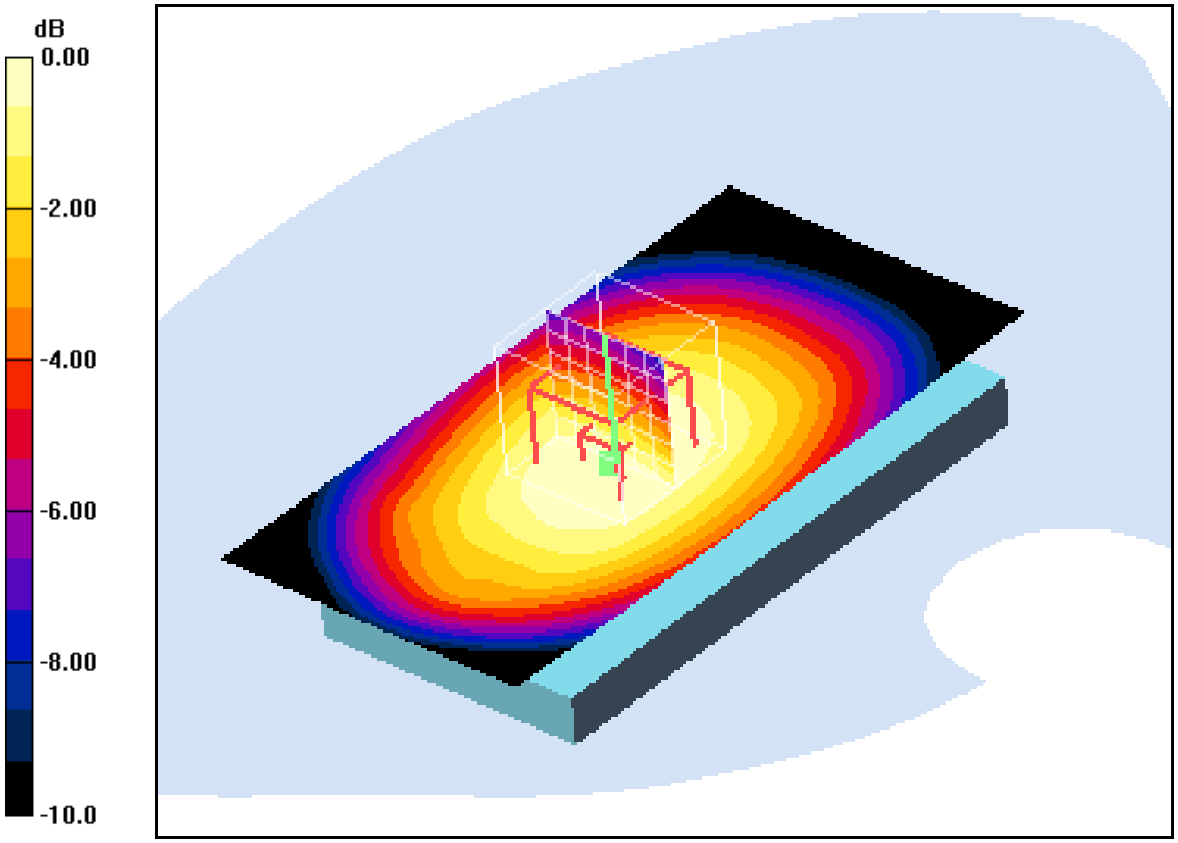

0 dB = 0.659mW/g

Additional information:
position or distance of DUT to SAM: 10 mm
ambient temperature: 23.7°C; liquid temperature: 22.9°C

Date/Time: 03.12.2011 19:19:59Date/Time: 03.12.2011 19:38:32

IEEE1528_OET65-Body-GSM850 GPRS 4TS

DUT: Sony Ericsson; Type: AAD-3880136-BV; Serial: CB511VCC34
Communication System: PCS 850 GPRS 4TS; Frequency: 836.6 MHz; Duty Cycle: 1:2
Medium: M850 Medium parameters used: f = 836.6 MHz; σ = 1 mho/m; ε_r = 55.1; ρ = 1000 kg/m^3
Phantom section: Flat Section
DASY4 Configuration:
- Probe: ET3DV6 - SN1558; ConvF(5.85, 5.85, 5.85); Calibrated: 23.08.2011
- Sensor-Surface: 4mm (Mechanical And Optical Surface Detection)
- Electronics: DAE3 Sn413; Calibrated: 13.01.2011
- Phantom: SAM 12; Type: SAM; Serial: 1043
- Measurement SW: DASY4, V4.5 Build 19; Postprocessing SW: SEMCAD, V1.8 Build 146

Rear position - Middle/Area Scan (51x101x1): Measurement grid: dx=15mm, dy=15mm

Maximum value of SAR (interpolated) = 0.990 mW/g

Rear position - Middle/Zoom Scan (7x7x7) (7x7x7)/Cube 0: Measurement grid: dx=5mm, dy=5mm, dz=5mm

Reference Value = 32.9 V/m; Power Drift = -0.139 dB
Peak SAR (extrapolated) = 1.10 W/kg
SAR(1 g) = 0.907 mW/g; SAR(10 g) = 0.686 mW/g
Maximum value of SAR (measured) = 0.969 mW/g

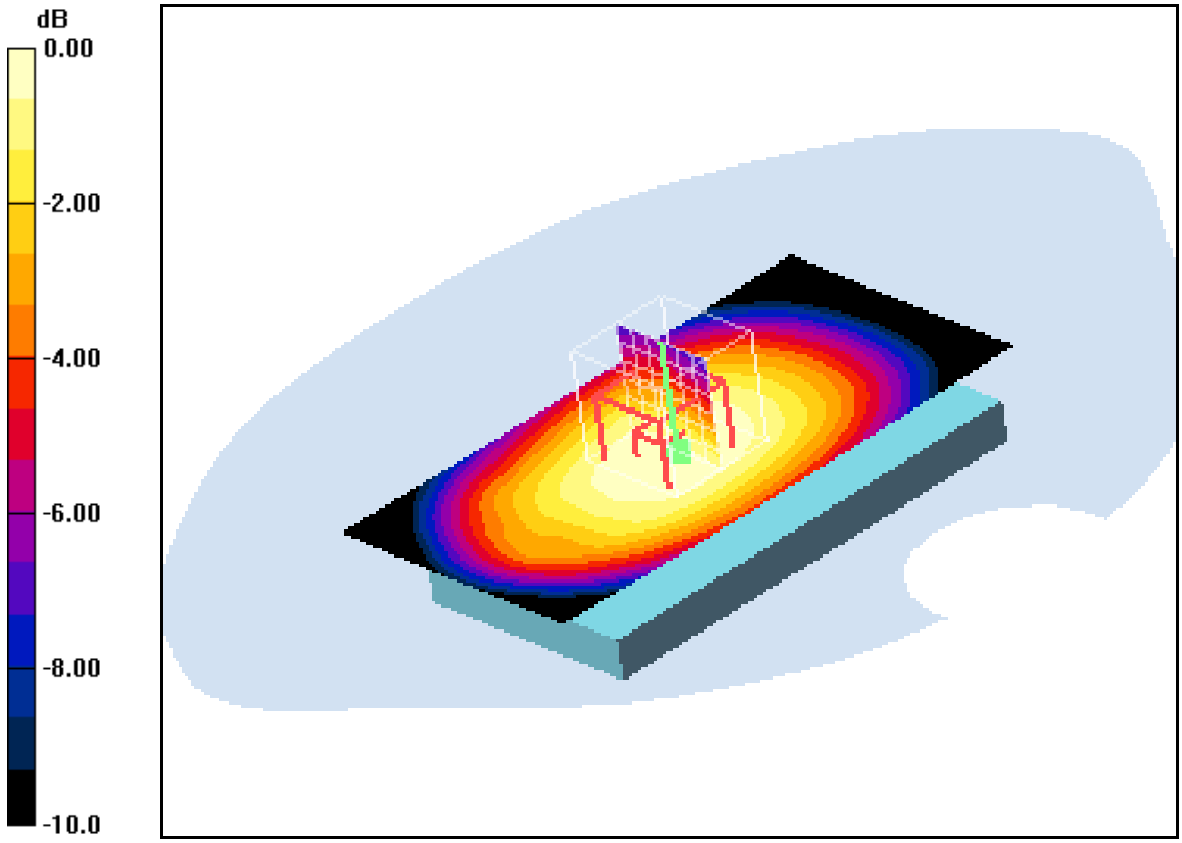

0 dB = 0.969mW/g

Additional information:
position or distance of DUT to SAM: 10 mm
ambient temperature: 23.7°C; liquid temperature: 22.9°C

Date/Time: 03.12.2011 19:52:31Date/Time: 03.12.2011 20:00:46

IEEE1528_OET65-Body-GSM850 GPRS 4TS

DUT: Sony Ericsson; Type: AAD-3880136-BV; Serial: CB511VCC34
Communication System: PCS 850 GPRS 4TS; Frequency: 848.8 MHz; Duty Cycle: 1:2
Medium: M850 Medium parameters used: f = 848.8 MHz; σ = 1.02 mho/m; ε_r = 55; ρ = 1000 kg/m^3
Phantom section: Flat Section
DASY4 Configuration:
- Probe: ET3DV6 - SN1558; ConvF(5.85, 5.85, 5.85); Calibrated: 23.08.2011
- Sensor-Surface: 4mm (Mechanical And Optical Surface Detection)
- Electronics: DAE3 Sn413; Calibrated: 13.01.2011
- Phantom: SAM 12; Type: SAM; Serial: 1043
- Measurement SW: DASY4, V4.5 Build 19; Postprocessing SW: SEMCAD, V1.8 Build 146

Rear position - High/Area Scan (51x101x1): Measurement grid: dx=15mm, dy=15mm

Maximum value of SAR (interpolated) = 1.02 mW/g

Rear position - High/Zoom Scan (7x7x7) (7x7x7)/Cube 0: Measurement grid: dx=5mm, dy=5mm, dz=5mm

Reference Value = 33.0 V/m; Power Drift = -0.046 dB
Peak SAR (extrapolated) = 1.20 W/kg
SAR(1 g) = 0.984 mW/g; SAR(10 g) = 0.748 mW/g
Maximum value of SAR (measured) = 1.04 mW/g

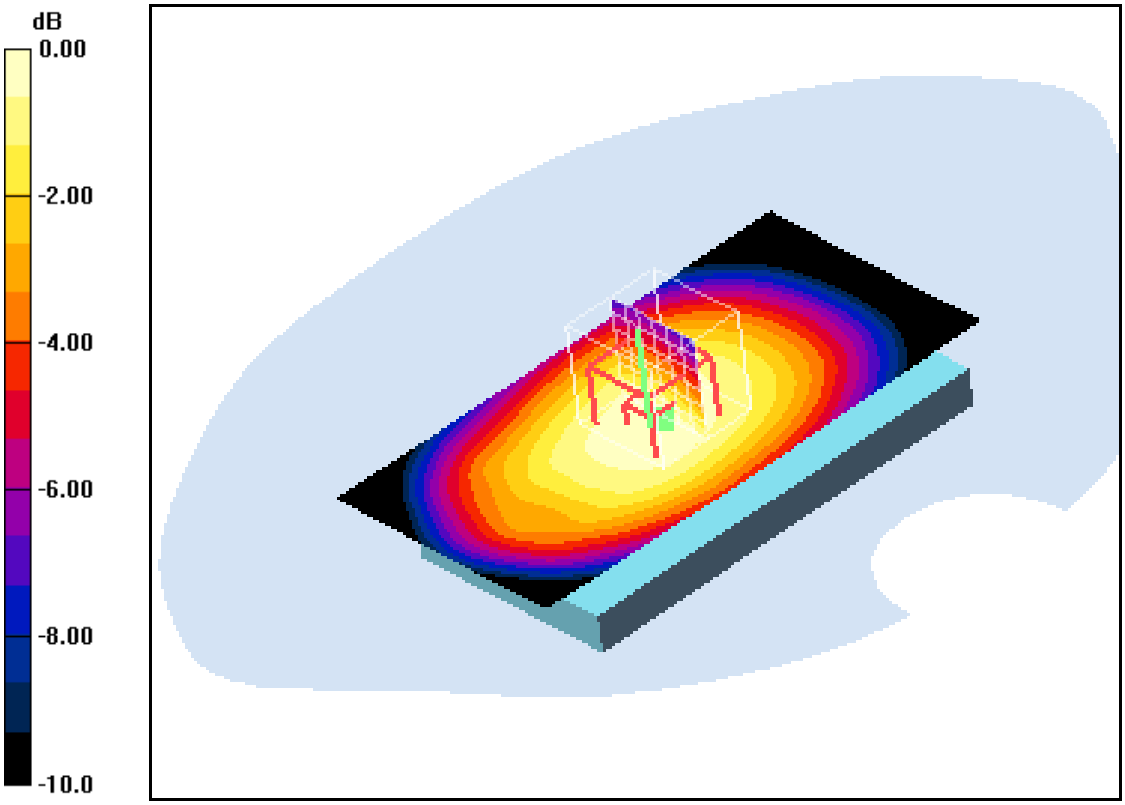

0 dB = 1.04mW/g

Additional information:
position or distance of DUT to SAM: 10 mm
ambient temperature: 23.7°C; liquid temperature: 22.9°C

Date/Time: 04.12.2011 12:05:42Date/Time: 04.12.2011 12:12:56

IEEE1528_OET65-Body-GSM850 GPRS 4TS

DUT: Sony Ericsson; Type: AAD-3880136-BV; Serial: CB511VCC34
Communication System: PCS 850 GPRS 4TS; Frequency: 836.6 MHz; Duty Cycle: 1:2
Medium: M850 Medium parameters used: f = 836.6 MHz; σ = 1 mho/m; ε_r = 55.1; ρ = 1000 kg/m^3
Phantom section: Flat Section
DASY4 Configuration:
- Probe: ET3DV6 - SN1558; ConvF(5.85, 5.85, 5.85); Calibrated: 23.08.2011
- Sensor-Surface: 4mm (Mechanical And Optical Surface Detection)
- Electronics: DAE3 Sn413; Calibrated: 13.01.2011
- Phantom: SAM 12; Type: SAM; Serial: 1043
- Measurement SW: DASY4, V4.5 Build 19; Postprocessing SW: SEMCAD, V1.8 Build 146

Edge left position - Middle/Area Scan (51x91x1): Measurement grid: dx=15mm, dy=15mm

Maximum value of SAR (interpolated) = 0.870 mW/g

Edge left position - Middle/Zoom Scan (7x7x7) (7x7x7)/Cube 0: Measurement grid: dx=5mm, dy=5mm, dz=5mm

Reference Value = 29.5 V/m; Power Drift = -0.191 dB
Peak SAR (extrapolated) = 1.07 W/kg
SAR(1 g) = 0.782 mW/g; SAR(10 g) = 0.543 mW/g
Maximum value of SAR (measured) = 0.838 mW/g

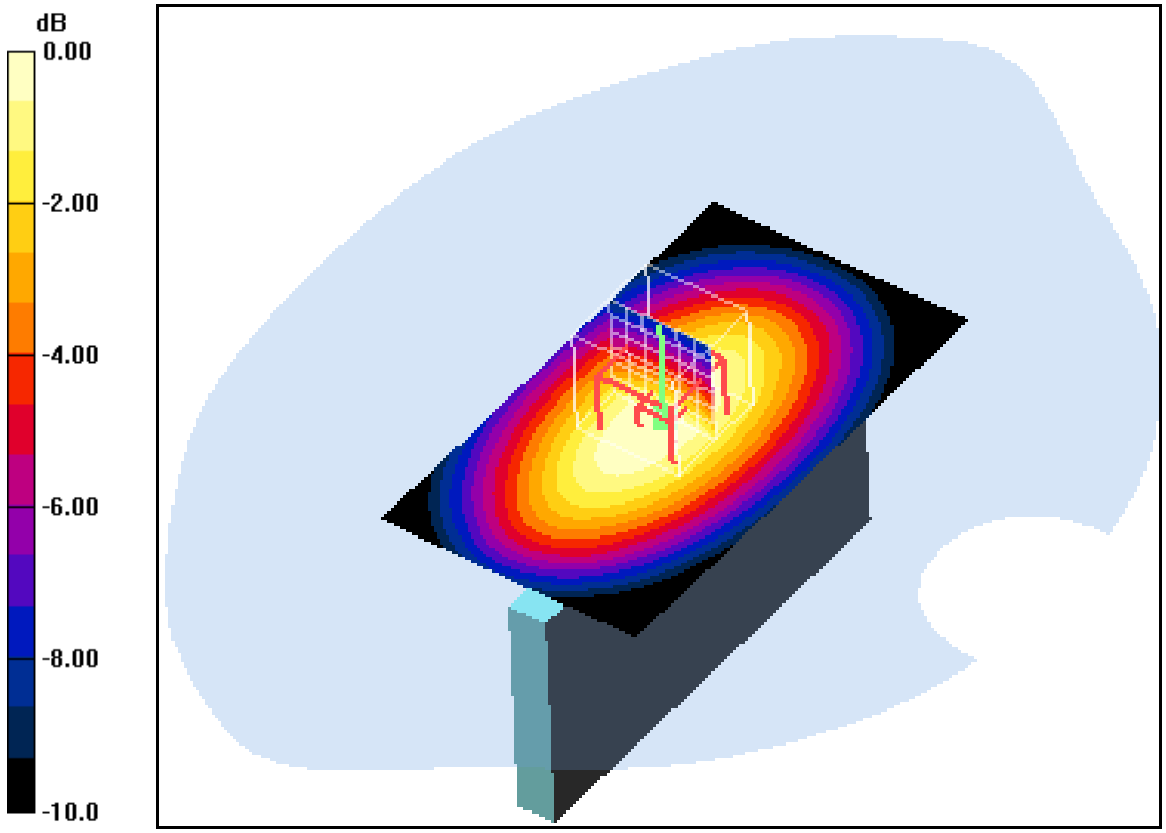

0 dB = 0.838mW/g

Additional information:
position or distance of DUT to SAM: 10 mm
ambient temperature: 23.7°C; liquid temperature: 22.9°C

Date/Time: 04.12.2011 13:37:56Date/Time: 04.12.2011 13:45:40

IEEE1528_OET65-Body-GSM850 GPRS 4TS

DUT: Sony Ericsson; Type: AAD-3880136-BV; Serial: CB511VCC34
Communication System: PCS 850 GPRS 4TS; Frequency: 836.6 MHz; Duty Cycle: 1:2
Medium: M850 Medium parameters used: f = 836.6 MHz; σ = 1 mho/m; ε_r = 55.1; ρ = 1000 kg/m^3
Phantom section: Flat Section
DASY4 Configuration:
- Probe: ET3DV6 - SN1558; ConvF(5.85, 5.85, 5.85); Calibrated: 23.08.2011
- Sensor-Surface: 4mm (Mechanical And Optical Surface Detection)
- Electronics: DAE3 Sn413; Calibrated: 13.01.2011
- Phantom: SAM 12; Type: SAM; Serial: 1043
- Measurement SW: DASY4, V4.5 Build 19; Postprocessing SW: SEMCAD, V1.8 Build 146

Edge right position - Middle/Area Scan (51x91x1): Measurement grid: dx=15mm, dy=15mm

Maximum value of SAR (interpolated) = 0.709 mW/g

Edge right position - Middle/Zoom Scan (7x7x7) (7x7x7)/Cube 0: Measurement grid: dx=5mm, dy=5mm, dz=5mm

Reference Value = 25.8 V/m; Power Drift = -0.013 dB
Peak SAR (extrapolated) = 0.846 W/kg
SAR(1 g) = 0.634 mW/g; SAR(10 g) = 0.447 mW/g
Maximum value of SAR (measured) = 0.676 mW/g

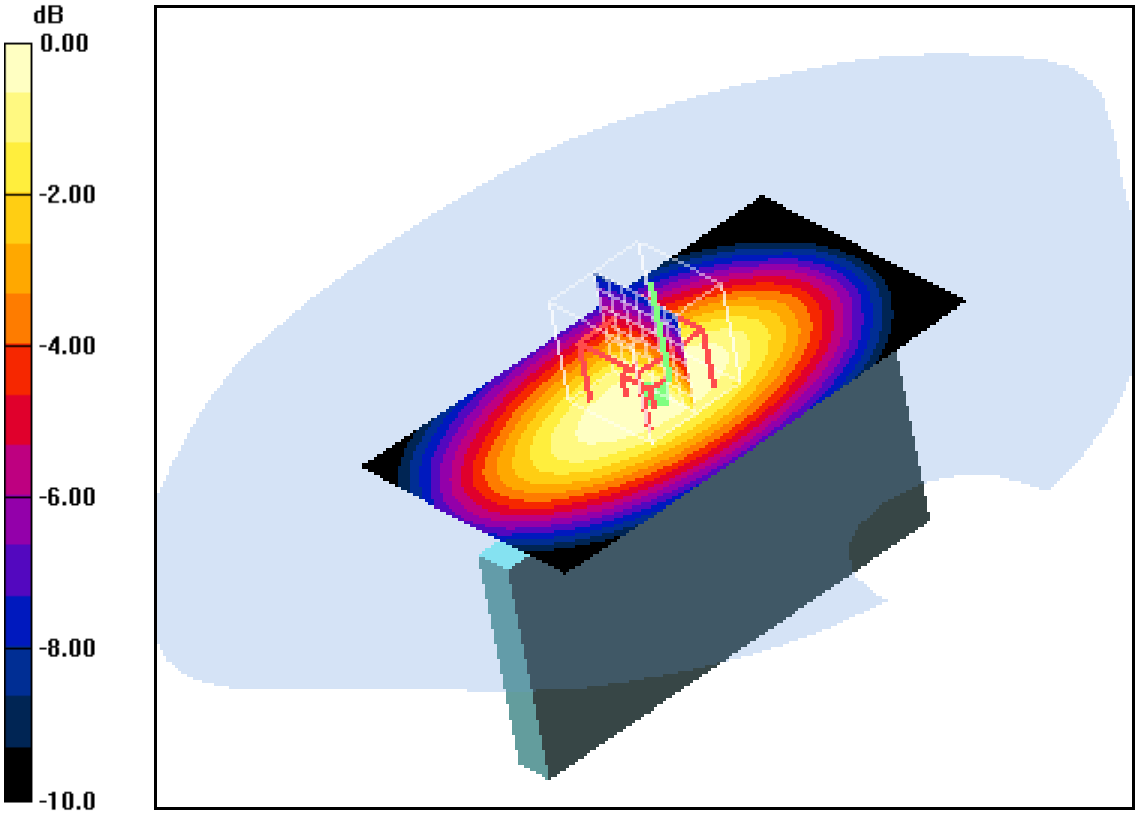

0 dB = 0.676mW/g

Additional information:
position or distance of DUT to SAM: 10 mm
ambient temperature: 23.7°C; liquid temperature: 22.9°C

Date/Time: 04.12.2011 16:02:32Date/Time: 04.12.2011 16:22:38

IEEE1528_OET65-Body-GSM850 GPRS 4TS

DUT: Sony Ericsson; Type: AAD-3880136-BV; Serial: CB511VCC34
Communication System: PCS 850 GPRS 4TS; Frequency: 836.6 MHz; Duty Cycle: 1:2
Medium: M850 Medium parameters used: f = 836.6 MHz; σ = 1 mho/m; ε_r = 55.1; ρ = 1000 kg/m^3
Phantom section: Flat Section
DASY4 Configuration:
- Probe: ET3DV6 - SN1558; ConvF(5.85, 5.85, 5.85); Calibrated: 23.08.2011
- Sensor-Surface: 4mm (Mechanical And Optical Surface Detection)
- Electronics: DAE3 Sn413; Calibrated: 13.01.2011
- Phantom: SAM 12; Type: SAM; Serial: 1043
- Measurement SW: DASY4, V4.5 Build 19; Postprocessing SW: SEMCAD, V1.8 Build 146

Edge bottom position - Middle/Area Scan (61x61x1): Measurement grid: dx=15mm, dy=15mm

Maximum value of SAR (interpolated) = 0.120 mW/g

Edge bottom position - Middle/Zoom Scan (7x7x7) (7x7x7)/Cube 0:

Measurement grid: dx=5mm, dy=5mm, dz=5mm
Reference Value = 10.7 V/m; Power Drift = 0.136 dB
Peak SAR (extrapolated) = 0.365 W/kg
SAR(1 g) = 0.130 mW/g; SAR(10 g) = 0.063 mW/g
Maximum value of SAR (measured) = 0.141 mW/g

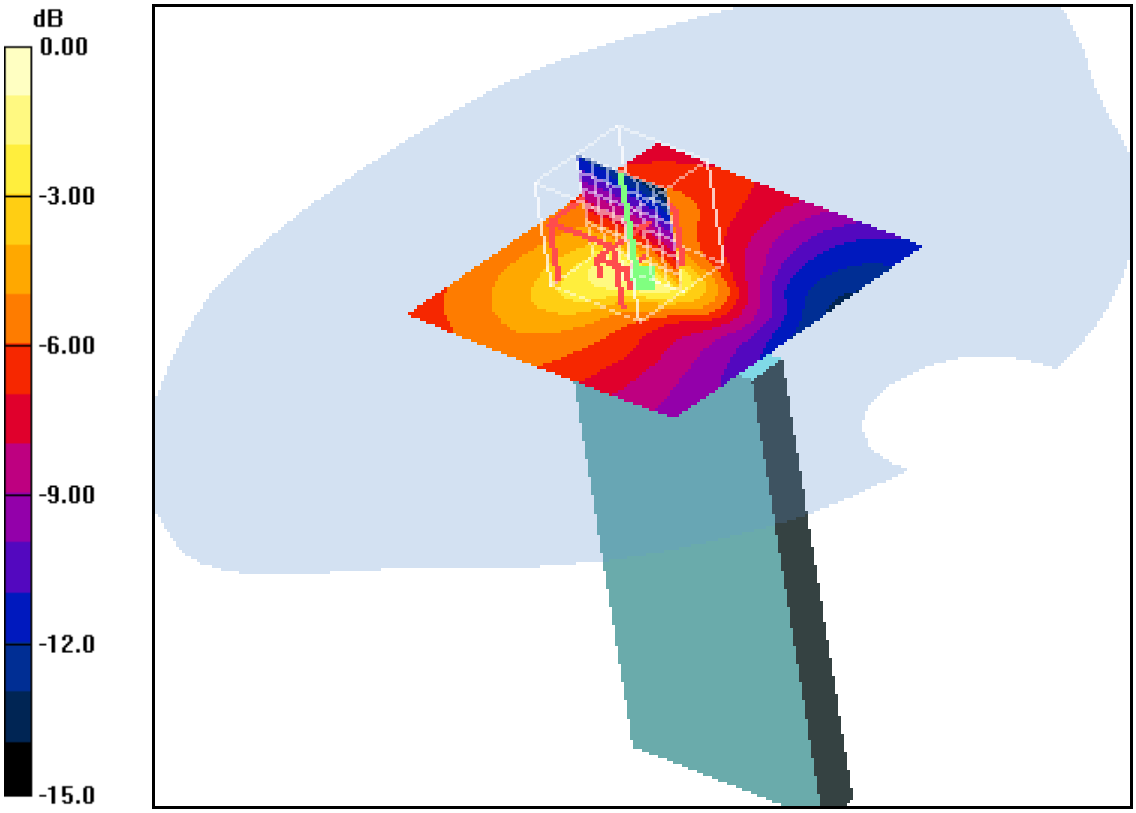

0 dB = 0.141mW/g

Additional information:
position or distance of DUT to SAM: 10 mm
ambient temperature: 23.7°C; liquid temperature: 22.9°C

Date/Time: 04.12.2011 18:35:18Date/Time: 04.12.2011 18:43:35

IEEE1528_OET65-Body-GSM850 GPRS 1TS

DUT: Sony Ericsson; Type: AAD-3880136-BV; Serial: CB511VCC34
Communication System: GSM 850; Frequency: 848.8 MHz; Duty Cycle: 1:8
Medium: M850 Medium parameters used: f = 848.8 MHz; σ = 1.02 mho/m; ε_r = 55; ρ = 1000 kg/m^3
Phantom section: Flat Section
DASY4 Configuration:
- Probe: ET3DV6 - SN1558; ConvF(5.85, 5.85, 5.85); Calibrated: 23.08.2011
- Sensor-Surface: 4mm (Mechanical And Optical Surface Detection)
- Electronics: DAE3 Sn413; Calibrated: 13.01.2011
- Phantom: SAM 12; Type: SAM; Serial: 1043
- Measurement SW: DASY4, V4.5 Build 19; Postprocessing SW: SEMCAD, V1.8 Build 146

Rear position - High/Area Scan (51x101x1): Measurement grid: dx=15mm, dy=15mm

Maximum value of SAR (interpolated) = 0.641 mW/g

Rear position - High/Zoom Scan (7x7x7) (7x7x7)/Cube 0: Measurement grid: dx=5mm, dy=5mm, dz=5mm

Reference Value = 26.0 V/m; Power Drift = 0.019 dB
Peak SAR (extrapolated) = 0.751 W/kg
SAR(1 g) = 0.597 mW/g; SAR(10 g) = 0.447 mW/g
Maximum value of SAR (measured) = 0.630 mW/g

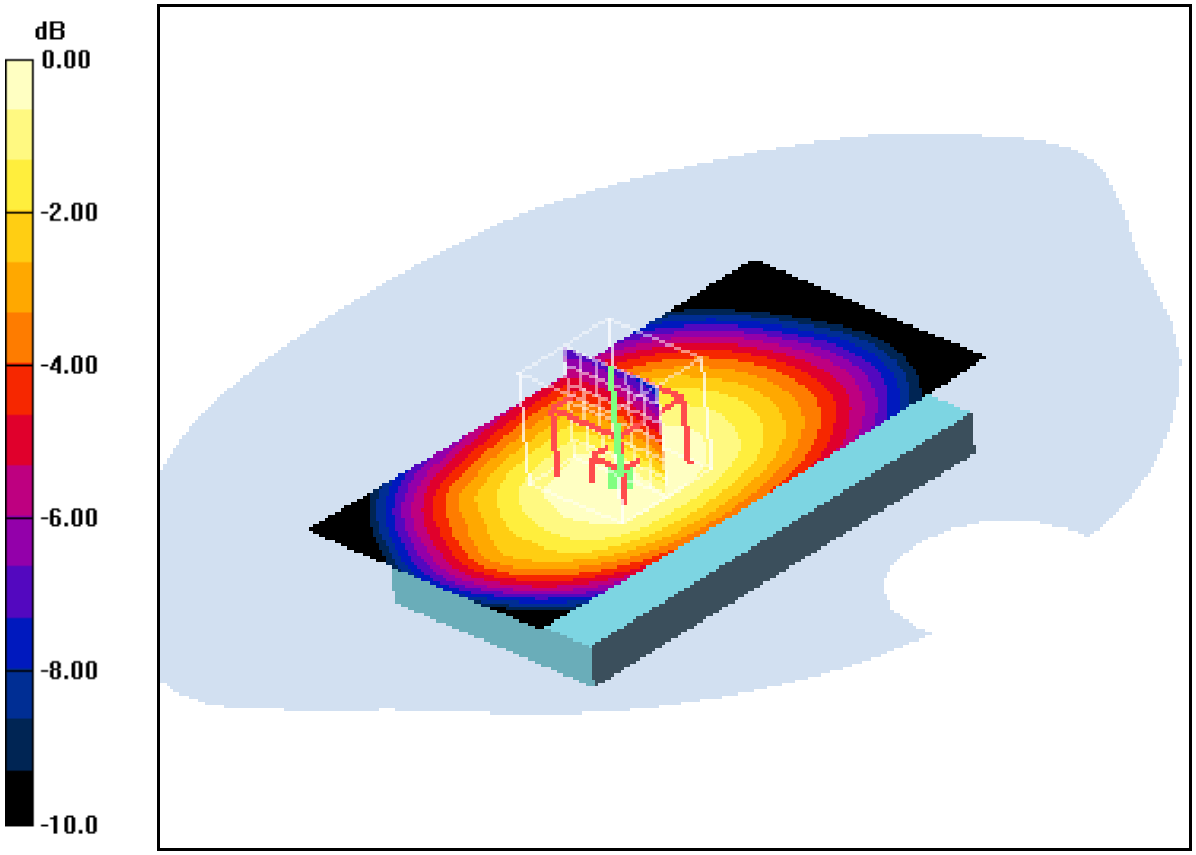

0 dB = 0.630mW/g

Additional information:
position or distance of DUT to SAM: 15 mm
ambient temperature: 23.7°C; liquid temperature: 22.9°C

Annex B.3: GSM 1900MHz head

Date/Time: 28.11.2011 08:38:57Date/Time: 28.11.2011 08:47:13

IEEE1528_OET65-LeftHandSide-GSM1900

DUT: Sony Ericsson; Type: AAD-3880136-BV; Serial: CB511VCC34
Communication System: GSM 1900; Frequency: 1850.2 MHz; Duty Cycle: 1:8
Medium: HSL1900 Medium parameters used: f = 1850.2 MHz; σ = 1.34 mho/m; ε_r = 40.3; ρ = 1000 kg/m^3
Phantom section: Left Section
DASY4 Configuration:
- Probe: ET3DV6 - SN1558; ConvF(4.86, 4.86, 4.86); Calibrated: 23.08.2011
- Sensor-Surface: 4mm (Mechanical And Optical Surface Detection)
- Electronics: DAE3 Sn413; Calibrated: 13.01.2011
- Phantom: SAM 12; Type: SAM; Serial: 1043
- Measurement SW: DASY4, V4.5 Build 19; Postprocessing SW: SEMCAD, V1.8 Build 146

Touch position - Low/Area Scan (61x91x1): Measurement grid: dx=15mm, dy=15mm

Maximum value of SAR (interpolated) = 0.760 mW/g

Touch position - Low/Zoom Scan (7x7x7) (7x7x7)/Cube 0: Measurement grid: dx=5mm, dy=5mm, dz=5mm

Reference Value = 23.3 V/m; Power Drift = -0.069 dB
Peak SAR (extrapolated) = 1.11 W/kg
SAR(1 g) = 0.717 mW/g; SAR(10 g) = 0.434 mW/g
Maximum value of SAR (measured) = 0.781 mW/g

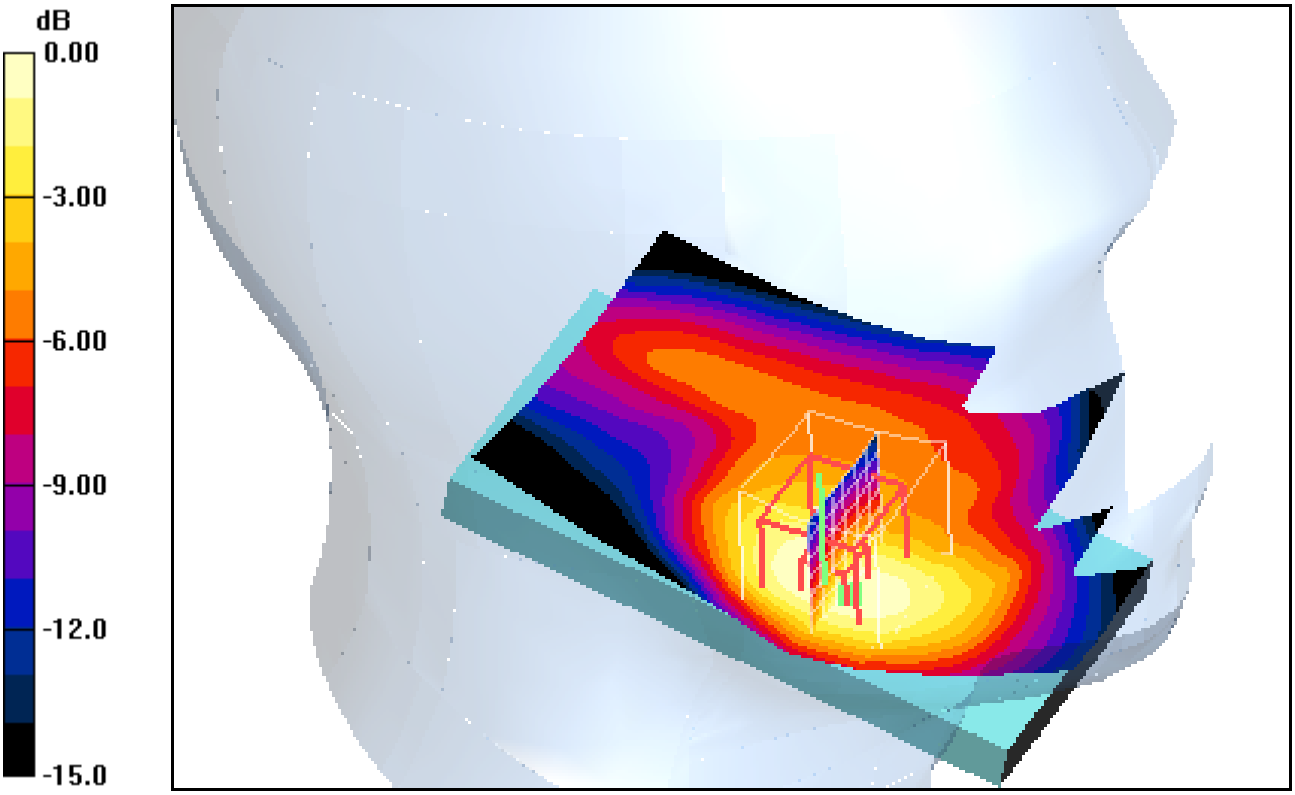

0 dB = 0.781mW/g

Additional information:
ambient temperature: 21.5°C; liquid temperature: 20.2°C

Date/Time: 28.11.2011 09:02:11Date/Time: 28.11.2011 09:09:22

IEEE1528_OET65-LeftHandSide-GSM1900

DUT: Sony Ericsson; Type: AAD-3880136-BV; Serial: CB511VCC34
Communication System: GSM 1900; Frequency: 1880 MHz; Duty Cycle: 1:8
Medium: HSL1900 Medium parameters used: f = 1880 MHz; σ = 1.36 mho/m; ε_r = 40.2; ρ = 1000 kg/m^3
Phantom section: Left Section
DASY4 Configuration:
- Probe: ET3DV6 - SN1558; ConvF(4.86, 4.86, 4.86); Calibrated: 23.08.2011
- Sensor-Surface: 4mm (Mechanical And Optical Surface Detection)
- Electronics: DAE3 Sn413; Calibrated: 13.01.2011
- Phantom: SAM 12; Type: SAM; Serial: 1043
- Measurement SW: DASY4, V4.5 Build 19; Postprocessing SW: SEMCAD, V1.8 Build 146

Touch position - Middle/Area Scan (61x91x1): Measurement grid: dx=15mm, dy=15mm
Maximum value of SAR (interpolated) = 0.818 mW/g

Touch position - Middle/Zoom Scan (7x7x7) (7x7x7)/Cube 0: Measurement grid: dx=5mm, dy=5mm, dz=5mm
Reference Value = 23.8 V/m; Power Drift = -0.01 dB
Peak SAR (extrapolated) = 1.22 W/kg
SAR(1 g) = 0.768 mW/g; SAR(10 g) = 0.457 mW/g
Maximum value of SAR (measured) = 0.830 mW/g

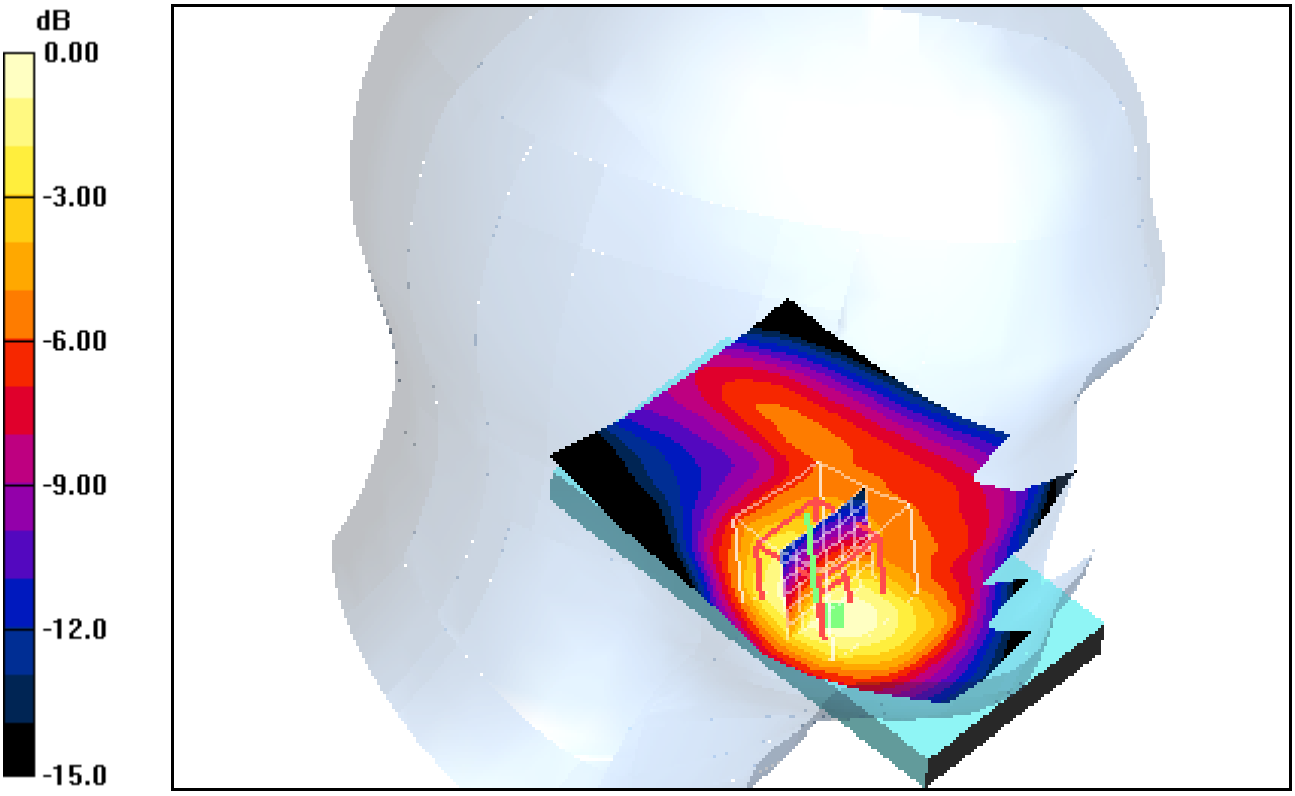

0 dB = 0.830mW/g

Additional information:
ambient temperature: 21.5°C; liquid temperature: 20.2°C

Date/Time: 28.11.2011 09:25:07Date/Time: 28.11.2011 09:32:18

IEEE1528_OET65-LeftHandSide-GSM1900

DUT: Sony Ericsson; Type: AAD-3880136-BV; Serial: CB511VCC34
Communication System: GSM 1900; Frequency: 1909.8 MHz; Duty Cycle: 1:8
Medium: HSL1900 Medium parameters used: f = 1909.8 MHz; σ = 1.39 mho/m; ε_r = 40.1; ρ = 1000 kg/m^3
Phantom section: Left Section
DASY4 Configuration:
- Probe: ET3DV6 - SN1558; ConvF(4.86, 4.86, 4.86); Calibrated: 23.08.2011
- Sensor-Surface: 4mm (Mechanical And Optical Surface Detection)
- Electronics: DAE3 Sn413; Calibrated: 13.01.2011
- Phantom: SAM 12; Type: SAM; Serial: 1043
- Measurement SW: DASY4, V4.5 Build 19; Postprocessing SW: SEMCAD, V1.8 Build 146

Touch position - High/Area Scan (61x91x1): Measurement grid: dx=15mm, dy=15mm
Maximum value of SAR (interpolated) = 0.920 mW/g

Touch position - High/Zoom Scan (7x7x7) (7x7x7)/Cube 0: Measurement grid: dx=5mm, dy=5mm, dz=5mm
Reference Value = 24.9 V/m; Power Drift = 0.052 dB
Peak SAR (extrapolated) = 1.42 W/kg
SAR(1 g) = 0.869 mW/g; SAR(10 g) = 0.511 mW/g
Maximum value of SAR (measured) = 0.955 mW/g

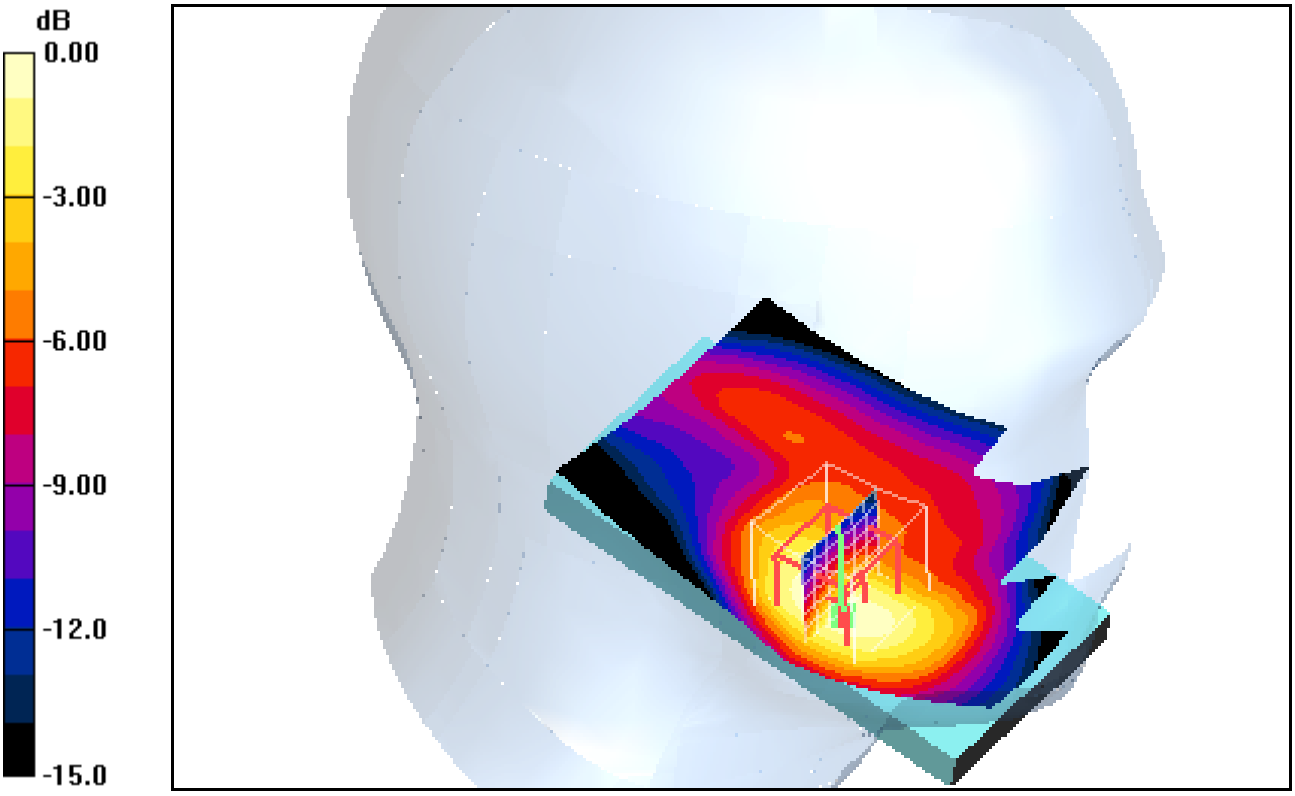

0 dB = 0.955mW/g

Additional information:
ambient temperature: 21.5°C; liquid temperature: 20.2°C

Date/Time: 28.11.2011 12:03:01Date/Time: 28.11.2011 12:10:33

IEEE1528_OET65-LeftHandSide-GSM1900

DUT: Sony Ericsson; Type: AAD-3880136-BV; Serial: CB511VCC34
Communication System: GSM 1900; Frequency: 1850.2 MHz; Duty Cycle: 1:8
Medium: HSL1900 Medium parameters used: f = 1850.2 MHz; σ = 1.34 mho/m; ε_r = 40.3; ρ = 1000 kg/m^3
Phantom section: Left Section
DASY4 Configuration:
- Probe: ET3DV6 - SN1558; ConvF(4.86, 4.86, 4.86); Calibrated: 23.08.2011
- Sensor-Surface: 4mm (Mechanical And Optical Surface Detection)
- Electronics: DAE3 Sn413; Calibrated: 13.01.2011
- Phantom: SAM 12; Type: SAM; Serial: 1043
- Measurement SW: DASY4, V4.5 Build 19; Postprocessing SW: SEMCAD, V1.8 Build 146

Tilt position - Low/Area Scan (61x91x1): Measurement grid: dx=15mm, dy=15mm

Maximum value of SAR (interpolated) = 0.331 mW/g

Tilt position - Low/Zoom Scan (7x7x7) (7x7x7)/Cube 0: Measurement grid: dx=5mm, dy=5mm, dz=5mm

Reference Value = 15.3 V/m; Power Drift = 0.088 dB
Peak SAR (extrapolated) = 0.455 W/kg
SAR(1 g) = 0.285 mW/g; SAR(10 g) = 0.177 mW/g
Maximum value of SAR (measured) = 0.308 mW/g

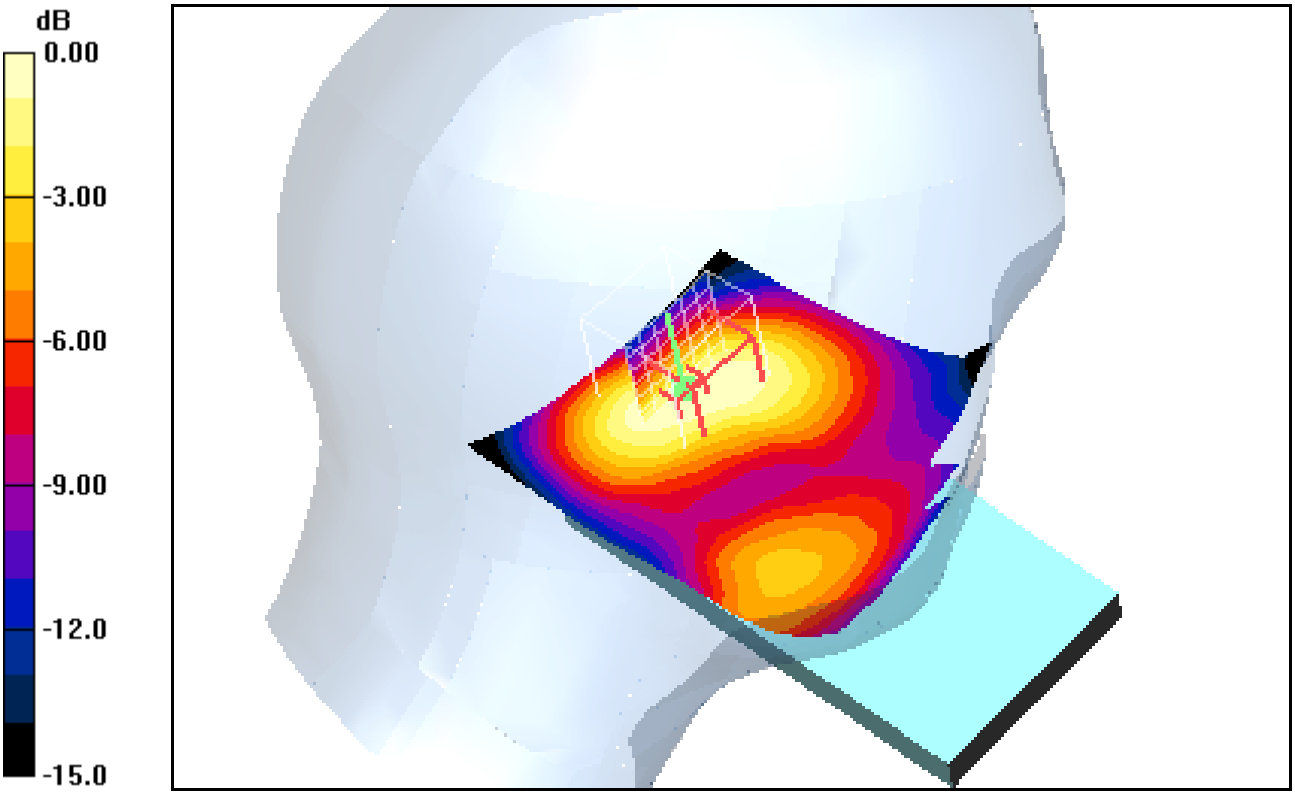

0 dB = 0.308mW/g

Additional information:
ambient temperature: 21.5°C; liquid temperature: 20.2°C

Date/Time: 28.11.2011 12:24:23Date/Time: 28.11.2011 12:33:05

IEEE1528_OET65-LeftHandSide-GSM1900

DUT: Sony Ericsson; Type: AAD-3880136-BV; Serial: CB511VCC34
Communication System: GSM 1900; Frequency: 1880 MHz; Duty Cycle: 1:8
Medium: HSL1900 Medium parameters used: f = 1880 MHz; σ = 1.36 mho/m; ε_r = 40.2; ρ = 1000 kg/m^3
Phantom section: Left Section
DASY4 Configuration:
- Probe: ET3DV6 - SN1558; ConvF(4.86, 4.86, 4.86); Calibrated: 23.08.2011
- Sensor-Surface: 4mm (Mechanical And Optical Surface Detection)
- Electronics: DAE3 Sn413; Calibrated: 13.01.2011
- Phantom: SAM 12; Type: SAM; Serial: 1043
- Measurement SW: DASY4, V4.5 Build 19; Postprocessing SW: SEMCAD, V1.8 Build 146

Tilt position - Middle/Area Scan (61x91x1): Measurement grid: dx=15mm, dy=15mm
Maximum value of SAR (interpolated) = 0.303 mW/g

Tilt position - Middle/Zoom Scan (7x7x7) (7x7x7)/Cube 0: Measurement grid: dx=5mm, dy=5mm, dz=5mm
Reference Value = 14.3 V/m; Power Drift = 0.00 dB
Peak SAR (extrapolated) = 0.425 W/kg
SAR(1 g) = 0.257 mW/g; SAR(10 g) = 0.158 mW/g
Maximum value of SAR (measured) = 0.280 mW/g

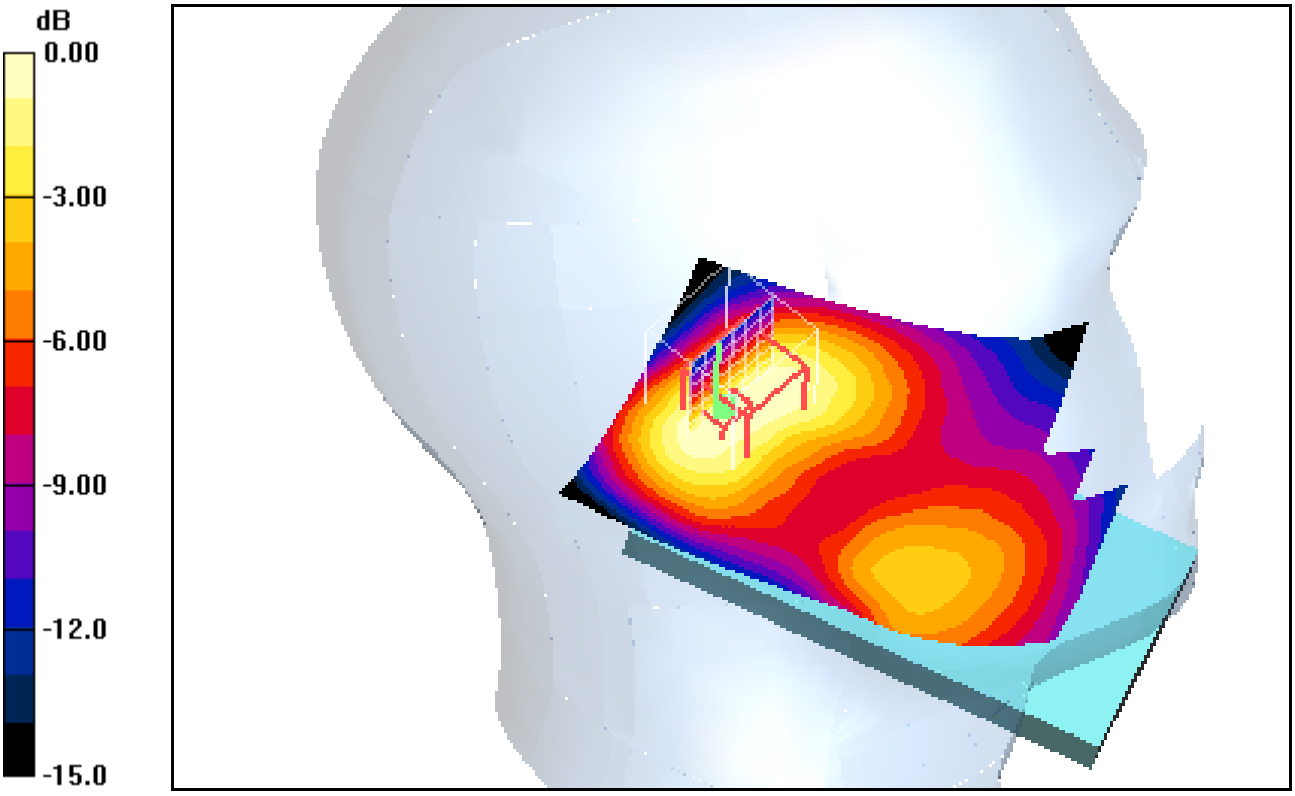

0 dB = 0.280mW/g

Additional information:
ambient temperature: 21.5°C; liquid temperature: 20.2°C

Date/Time: 28.11.2011 12:46:27Date/Time: 28.11.2011 12:54:02

IEEE1528_OET65-LeftHandSide-GSM1900

DUT: Sony Ericsson; Type: AAD-3880136-BV; Serial: CB511VCC34
Communication System: GSM 1900; Frequency: 1909.8 MHz; Duty Cycle: 1:8
Medium: HSL1900 Medium parameters used: f = 1909.8 MHz; σ = 1.39 mho/m; ε_r = 40.1; ρ = 1000 kg/m^3
Phantom section: Left Section
DASY4 Configuration:
- Probe: ET3DV6 - SN1558; ConvF(4.86, 4.86, 4.86); Calibrated: 23.08.2011
- Sensor-Surface: 4mm (Mechanical And Optical Surface Detection)
- Electronics: DAE3 Sn413; Calibrated: 13.01.2011
- Phantom: SAM 12; Type: SAM; Serial: 1043
- Measurement SW: DASY4, V4.5 Build 19; Postprocessing SW: SEMCAD, V1.8 Build 146

Tilt position - High/Area Scan (61x91x1): Measurement grid: dx=15mm, dy=15mm
Maximum value of SAR (interpolated) = 0.281 mW/g

Tilt position - High/Zoom Scan (7x7x7) (7x7x7)/Cube 0: Measurement grid: dx=5mm, dy=5mm, dz=5mm
Reference Value = 13.3 V/m; Power Drift = -0.00 dB
Peak SAR (extrapolated) = 0.406 W/kg
SAR(1 g) = 0.239 mW/g; SAR(10 g) = 0.142 mW/g
Maximum value of SAR (measured) = 0.260 mW/g

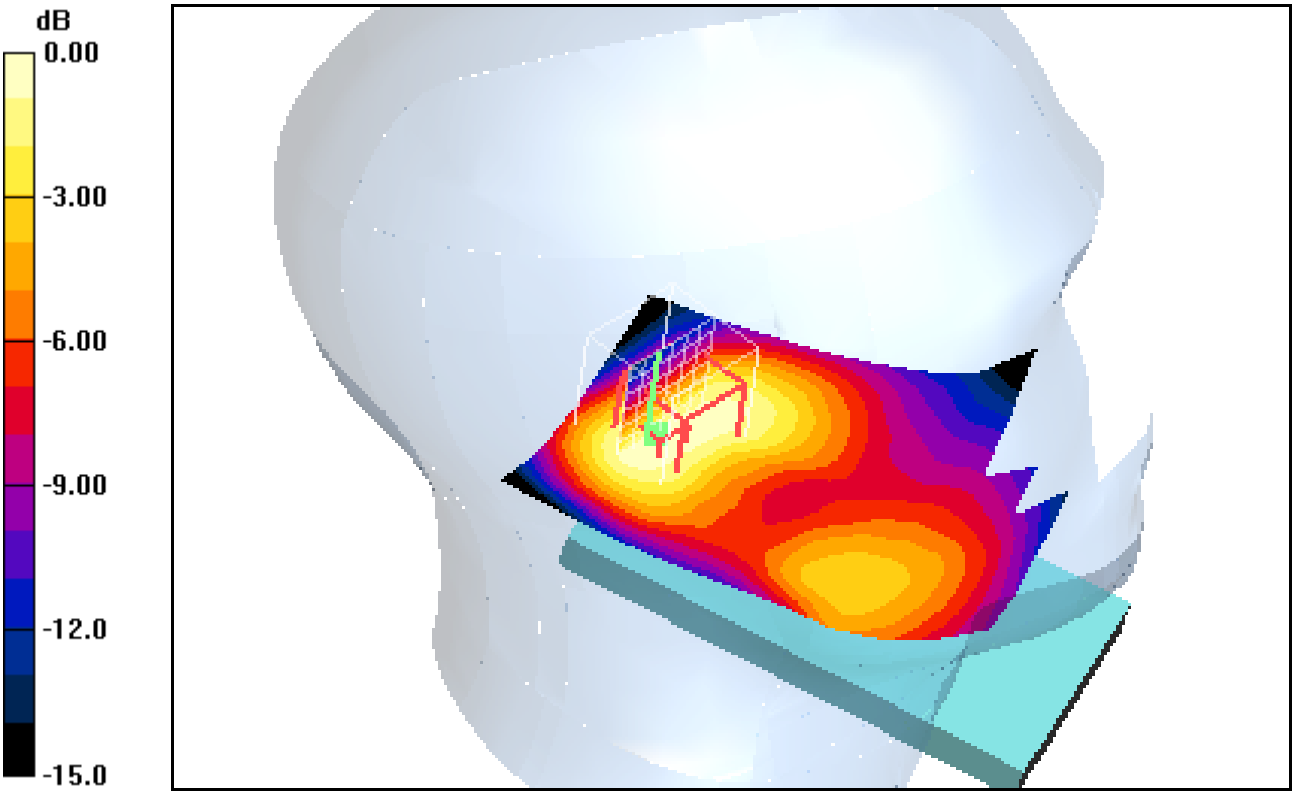

0 dB = 0.260mW/g

Additional information:
ambient temperature: 21.5°C; liquid temperature: 20.2°C

Date/Time: 28.11.2011 14:53:30Date/Time: 28.11.2011 15:00:36Date/Time: 28.11.2011 15:12:37

IEEE1528_OET65-RightHandSide-GSM1900

DUT: Sony Ericsson; Type: AAD-3880136-BV; Serial: CB511VCC34
Communication System: GSM 1900; Frequency: 1850.2 MHz; Duty Cycle: 1:8
Medium: HSL1900 Medium parameters used: f = 1850.2 MHz; σ = 1.34 mho/m; ε_r = 40.3; ρ = 1000 kg/m^3
Phantom section: Right Section
DASY4 Configuration:
- Probe: ET3DV6 - SN1558; ConvF(4.86, 4.86, 4.86); Calibrated: 23.08.2011
- Sensor-Surface: 4mm (Mechanical And Optical Surface Detection)
- Electronics: DAE3 Sn413; Calibrated: 13.01.2011
- Phantom: SAM 12; Type: SAM; Serial: 1043
- Measurement SW: DASY4, V4.5 Build 19; Postprocessing SW: SEMCAD, V1.8 Build 146

Touch position - Low/Area Scan (61x91x1): Measurement grid: dx=15mm, dy=15mm

Maximum value of SAR (interpolated) = 0.357 mW/g

Touch position - Low/Zoom Scan (7x7x7) (7x7x7)/Cube 0: Measurement grid: dx=5mm, dy=5mm, dz=5mm

Reference Value = 16.9 V/m; Power Drift = 0.171 dB
Peak SAR (extrapolated) = 0.488 W/kg
SAR(1 g) = 0.333 mW/g; SAR(10 g) = 0.223 mW/g
Maximum value of SAR (measured) = 0.354 mW/g

Touch position - Low/Zoom Scan (7x7x7) (7x7x7)/Cube 1: Measurement grid: dx=5mm, dy=5mm, dz=5mm

Reference Value = 16.9 V/m; Power Drift = 0.171 dB
Peak SAR (extrapolated) = 0.408 W/kg
SAR(1 g) = 0.302 mW/g; SAR(10 g) = 0.203 mW/g
Maximum value of SAR (measured) = 0.325 mW/g

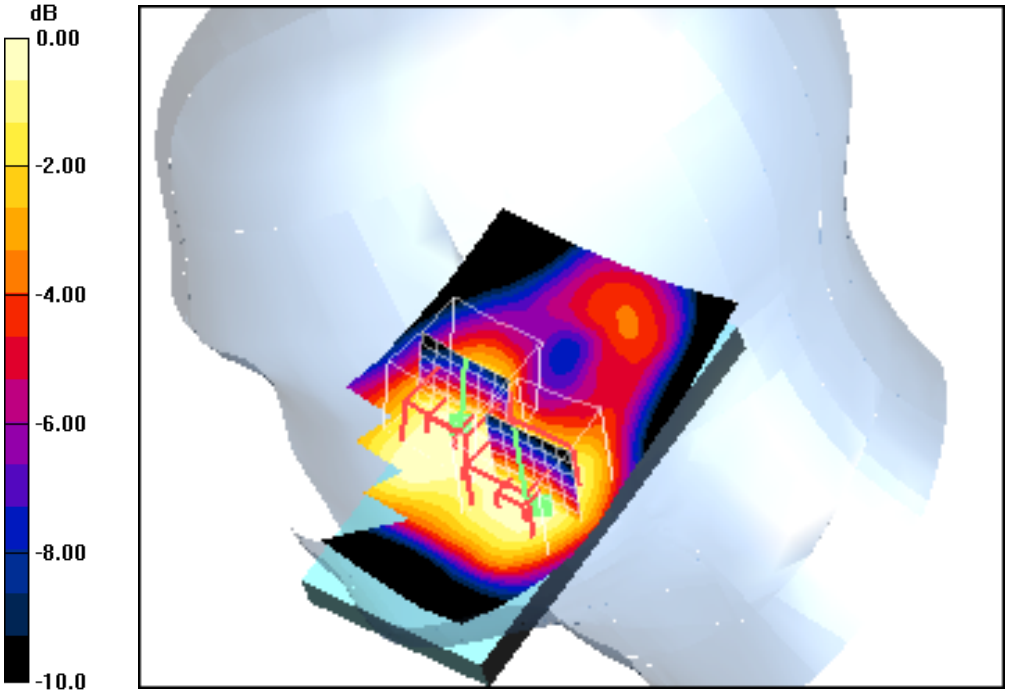

0 dB = 0.325mW/g

Additional information:
ambient temperature: 22.2°C; liquid temperature: 20.8°C

Date/Time: 28.11.2011 15:27:37Date/Time: 28.11.2011 15:37:42

IEEE1528_OET65-RightHandSide-GSM1900

DUT: Sony Ericsson; Type: AAD-3880136-BV; Serial: CB511VCC34
Communication System: GSM 1900; Frequency: 1880 MHz; Duty Cycle: 1:8
Medium: HSL1900 Medium parameters used: f = 1880 MHz; σ = 1.36 mho/m; ε_r = 40.2; ρ = 1000 kg/m^3
Phantom section: Right Section
DASY4 Configuration:
- Probe: ET3DV6 - SN1558; ConvF(4.86, 4.86, 4.86); Calibrated: 23.08.2011
- Sensor-Surface: 4mm (Mechanical And Optical Surface Detection)
- Electronics: DAE3 Sn413; Calibrated: 13.01.2011
- Phantom: SAM 12; Type: SAM; Serial: 1043
- Measurement SW: DASY4, V4.5 Build 19; Postprocessing SW: SEMCAD, V1.8 Build 146

Touch position - Middle/Area Scan (61x91x1): Measurement grid: dx=15mm, dy=15mm
Maximum value of SAR (interpolated) = 0.421 mW/g

Touch position - Middle/Zoom Scan (7x7x7) (7x13x7)/Cube 0: Measurement grid: dx=5mm, dy=5mm, dz=5mm
Reference Value = 18.0 V/m; Power Drift = 0.01 dB
Peak SAR (extrapolated) = 0.562 W/kg
SAR(1 g) = 0.378 mW/g; SAR(10 g) = 0.247 mW/g
Maximum value of SAR (measured) = 0.406 mW/g

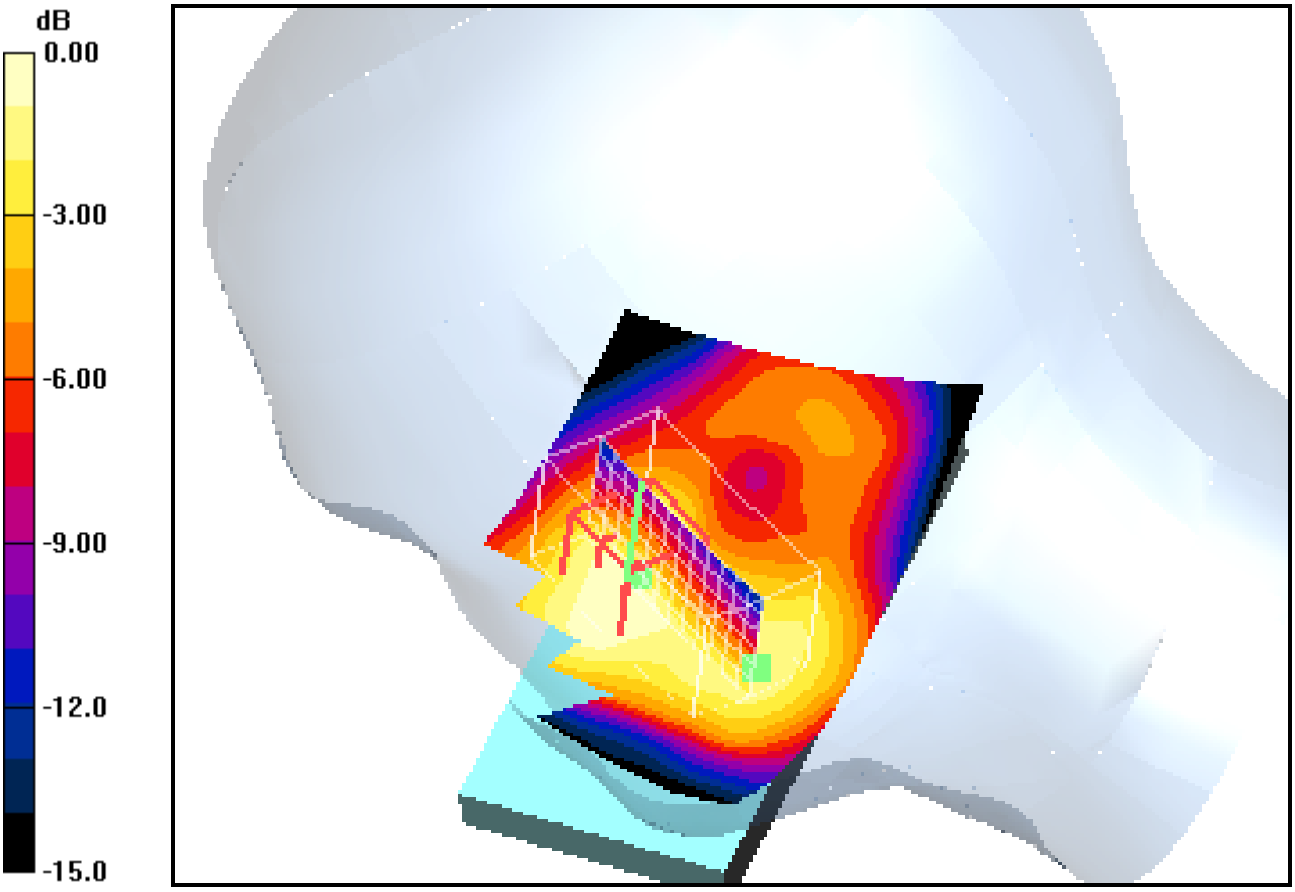

0 dB = 0.406mW/g

Additional information:
ambient temperature: 22.2°C; liquid temperature: 20.8°C

Date/Time: 28.11.2011 16:02:18Date/Time: 28.11.2011 16:10:09

IEEE1528_OET65-RightHandSide-GSM1900

DUT: Sony Ericsson; Type: AAD-3880136-BV; Serial: CB511VCC34
Communication System: GSM 1900; Frequency: 1909.8 MHz; Duty Cycle: 1:8
Medium: HSL1900 Medium parameters used: f = 1909.8 MHz; σ = 1.39 mho/m; ε_r = 40.1; ρ = 1000 kg/m^3
Phantom section: Right Section
DASY4 Configuration:
- Probe: ET3DV6 - SN1558; ConvF(4.86, 4.86, 4.86); Calibrated: 23.08.2011
- Sensor-Surface: 4mm (Mechanical And Optical Surface Detection)
- Electronics: DAE3 Sn413; Calibrated: 13.01.2011
- Phantom: SAM 12; Type: SAM; Serial: 1043
- Measurement SW: DASY4, V4.5 Build 19; Postprocessing SW: SEMCAD, V1.8 Build 146

Touch position - High/Area Scan (61x91x1): Measurement grid: dx=15mm, dy=15mm

Maximum value of SAR (interpolated) = 0.479 mW/g

Touch position - High/Zoom Scan (7x7x7) (7x7x7)/Cube 0: Measurement grid: dx=5mm, dy=5mm, dz=5mm

Reference Value = 18.9 V/m; Power Drift = -0.042 dB
Peak SAR (extrapolated) = 0.631 W/kg
SAR(1 g) = 0.421 mW/g; SAR(10 g) = 0.269 mW/g
Maximum value of SAR (measured) = 0.451 mW/g

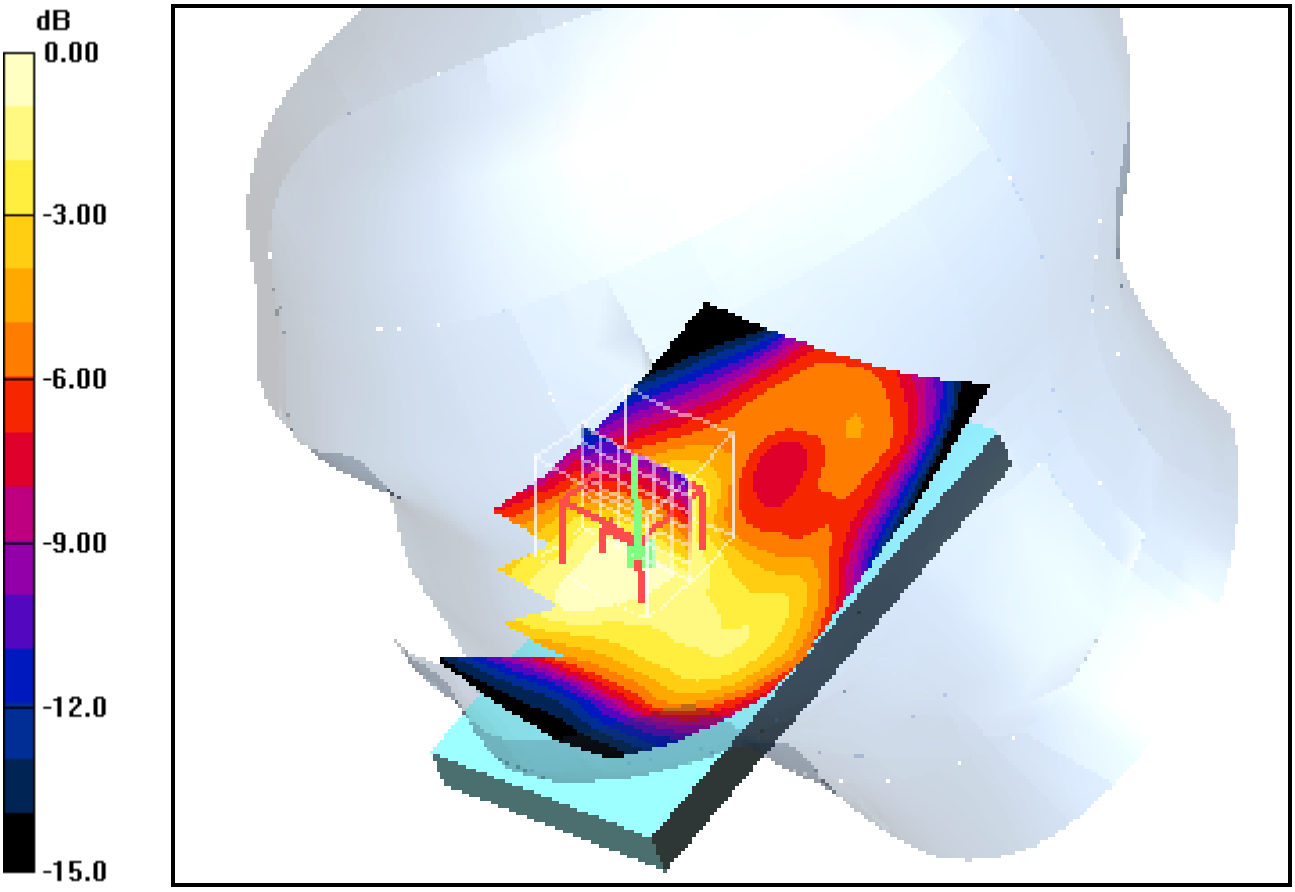

0 dB = 0.451mW/g

Additional information:
ambient temperature: 22.2°C; liquid temperature: 20.8°C

Date/Time: 28.11.2011 18:47:04Date/Time: 28.11.2011 18:54:27

IEEE1528_OET65-RightHandSide-GSM1900

DUT: Sony Ericsson; Type: AAD-3880136-BV; Serial: CB511VCC34
Communication System: GSM 1900; Frequency: 1850.2 MHz; Duty Cycle: 1:8
Medium: HSL1900 Medium parameters used: f = 1850.2 MHz; σ = 1.34 mho/m; ε_r = 40.3; ρ = 1000 kg/m^3
Phantom section: Right Section
DASY4 Configuration:
- Probe: ET3DV6 - SN1558; ConvF(4.86, 4.86, 4.86); Calibrated: 23.08.2011
- Sensor-Surface: 4mm (Mechanical And Optical Surface Detection)
- Electronics: DAE3 Sn413; Calibrated: 13.01.2011
- Phantom: SAM 12; Type: SAM; Serial: 1043
- Measurement SW: DASY4, V4.5 Build 19; Postprocessing SW: SEMCAD, V1.8 Build 146

Tilt position - Low/Area Scan (61x91x1): Measurement grid: dx=15mm, dy=15mm

Maximum value of SAR (interpolated) = 0.338 mW/g

Tilt position - Low/Zoom Scan (7x7x7) (7x7x7)/Cube 0: Measurement grid: dx=5mm, dy=5mm, dz=5mm

Reference Value = 15.2 V/m; Power Drift = -0.090 dB
Peak SAR (extrapolated) = 0.458 W/kg
SAR(1 g) = 0.288 mW/g; SAR(10 g) = 0.169 mW/g
Maximum value of SAR (measured) = 0.319 mW/g

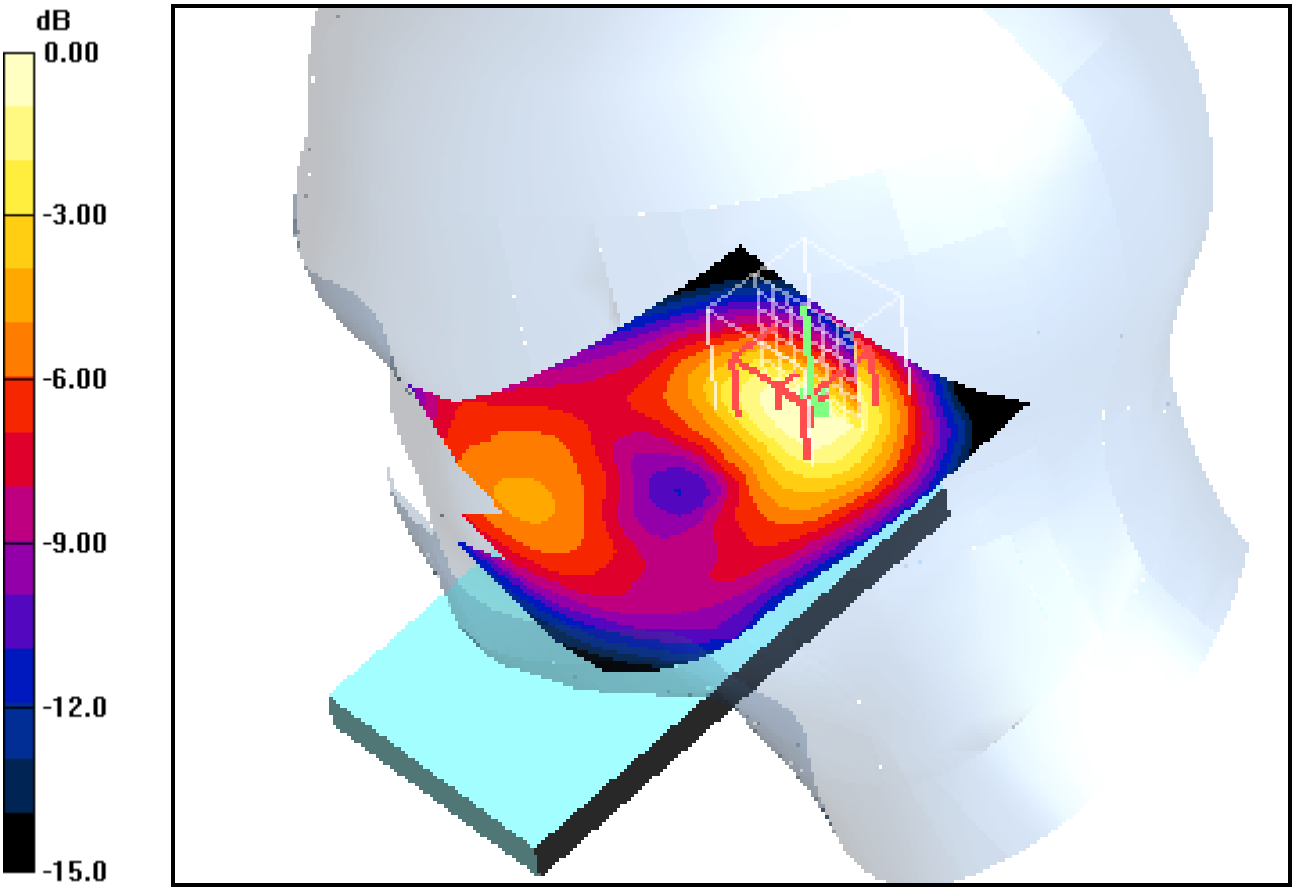

0 dB = 0.319mW/g

Additional information:
ambient temperature: 22.2°C; liquid temperature: 20.8°C

Date/Time: 28.11.2011 19:07:38Date/Time: 28.11.2011 19:15:03

IEEE1528_OET65-RightHandSide-GSM1900

DUT: Sony Ericsson; Type: AAD-3880136-BV; Serial: CB511VCC34
Communication System: GSM 1900; Frequency: 1880 MHz; Duty Cycle: 1:8
Medium: HSL1900 Medium parameters used: f = 1880 MHz; σ = 1.36 mho/m; ε_r = 40.2; ρ = 1000 kg/m^3
Phantom section: Right Section
DASY4 Configuration:
- Probe: ET3DV6 - SN1558; ConvF(4.86, 4.86, 4.86); Calibrated: 23.08.2011
- Sensor-Surface: 4mm (Mechanical And Optical Surface Detection)
- Electronics: DAE3 Sn413; Calibrated: 13.01.2011
- Phantom: SAM 12; Type: SAM; Serial: 1043
- Measurement SW: DASY4, V4.5 Build 19; Postprocessing SW: SEMCAD, V1.8 Build 146

Tilt position - Middle/Area Scan (61x91x1): Measurement grid: dx=15mm, dy=15mm

Maximum value of SAR (interpolated) = 0.304 mW/g

Tilt position - Middle/Zoom Scan (7x7x7) (7x7x7)/Cube 0: Measurement grid: dx=5mm, dy=5mm, dz=5mm

Reference Value = 14.2 V/m; Power Drift = 0.023 dB
Peak SAR (extrapolated) = 0.429 W/kg
SAR(1 g) = 0.267 mW/g; SAR(10 g) = 0.154 mW/g
Maximum value of SAR (measured) = 0.296 mW/g

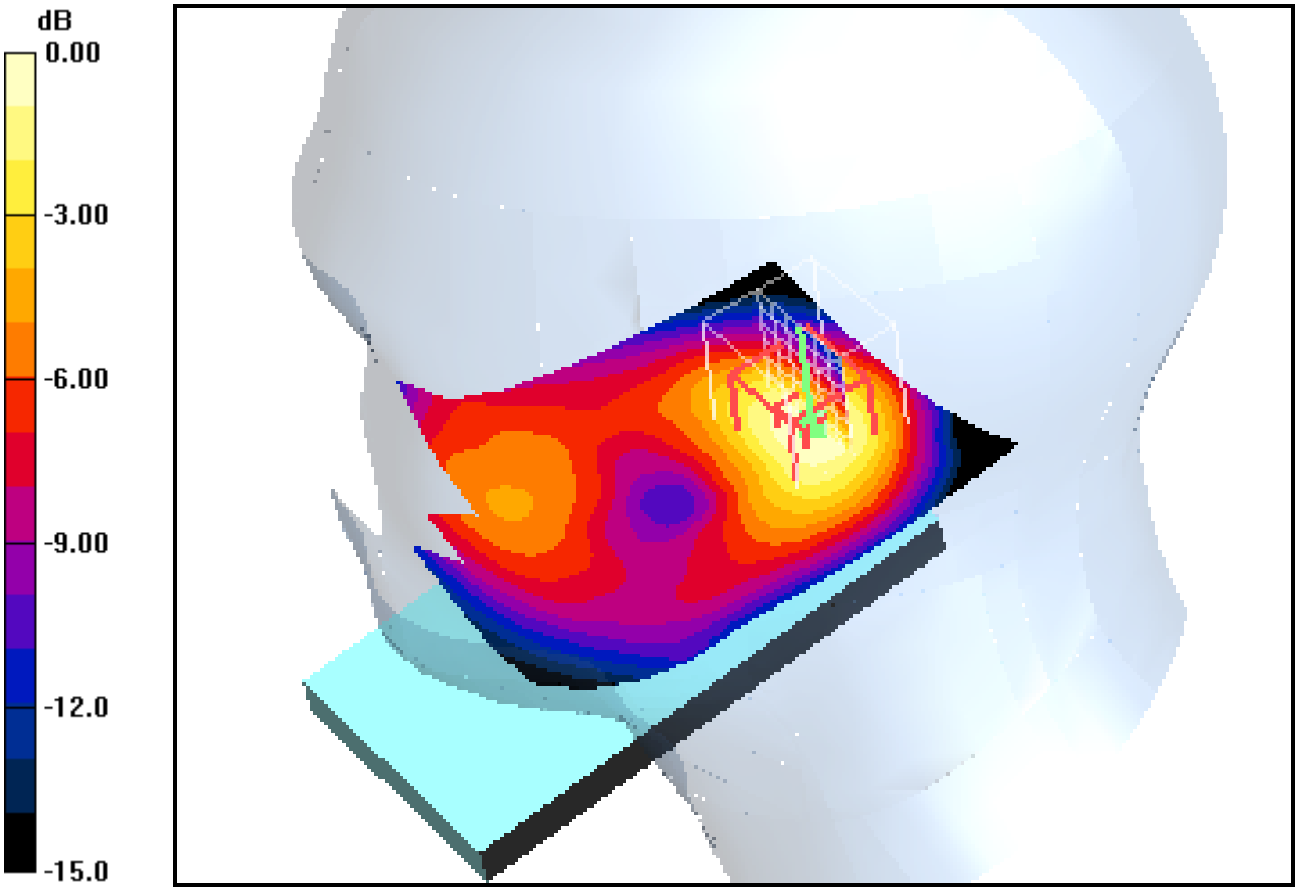

0 dB = 0.296mW/g

Additional information:
ambient temperature: 22.2°C; liquid temperature: 20.8°C

Date/Time: 28.11.2011 19:28:11Date/Time: 28.11.2011 19:35:35

IEEE1528_OET65-RightHandSide-GSM1900

DUT: Sony Ericsson; Type: AAD-3880136-BV; Serial: CB511VCC34
Communication System: GSM 1900; Frequency: 1909.8 MHz; Duty Cycle: 1:8
Medium: HSL1900 Medium parameters used: f = 1909.8 MHz; σ = 1.39 mho/m; ε_r = 40.1; ρ = 1000 kg/m^3
Phantom section: Right Section
DASY4 Configuration:
- Probe: ET3DV6 - SN1558; ConvF(4.86, 4.86, 4.86); Calibrated: 23.08.2011
- Sensor-Surface: 4mm (Mechanical And Optical Surface Detection)
- Electronics: DAE3 Sn413; Calibrated: 13.01.2011
- Phantom: SAM 12; Type: SAM; Serial: 1043
- Measurement SW: DASY4, V4.5 Build 19; Postprocessing SW: SEMCAD, V1.8 Build 146

Tilt position - High/Area Scan (61x91x1): Measurement grid: dx=15mm, dy=15mm
Maximum value of SAR (interpolated) = 0.290 mW/g

Tilt position - High/Zoom Scan (7x7x7) (7x7x7)/Cube 0: Measurement grid: dx=5mm, dy=5mm, dz=5mm
Reference Value = 13.6 V/m; Power Drift = 0.013 dB
Peak SAR (extrapolated) = 0.410 W/kg
SAR(1 g) = 0.251 mW/g; SAR(10 g) = 0.144 mW/g
Maximum value of SAR (measured) = 0.273 mW/g

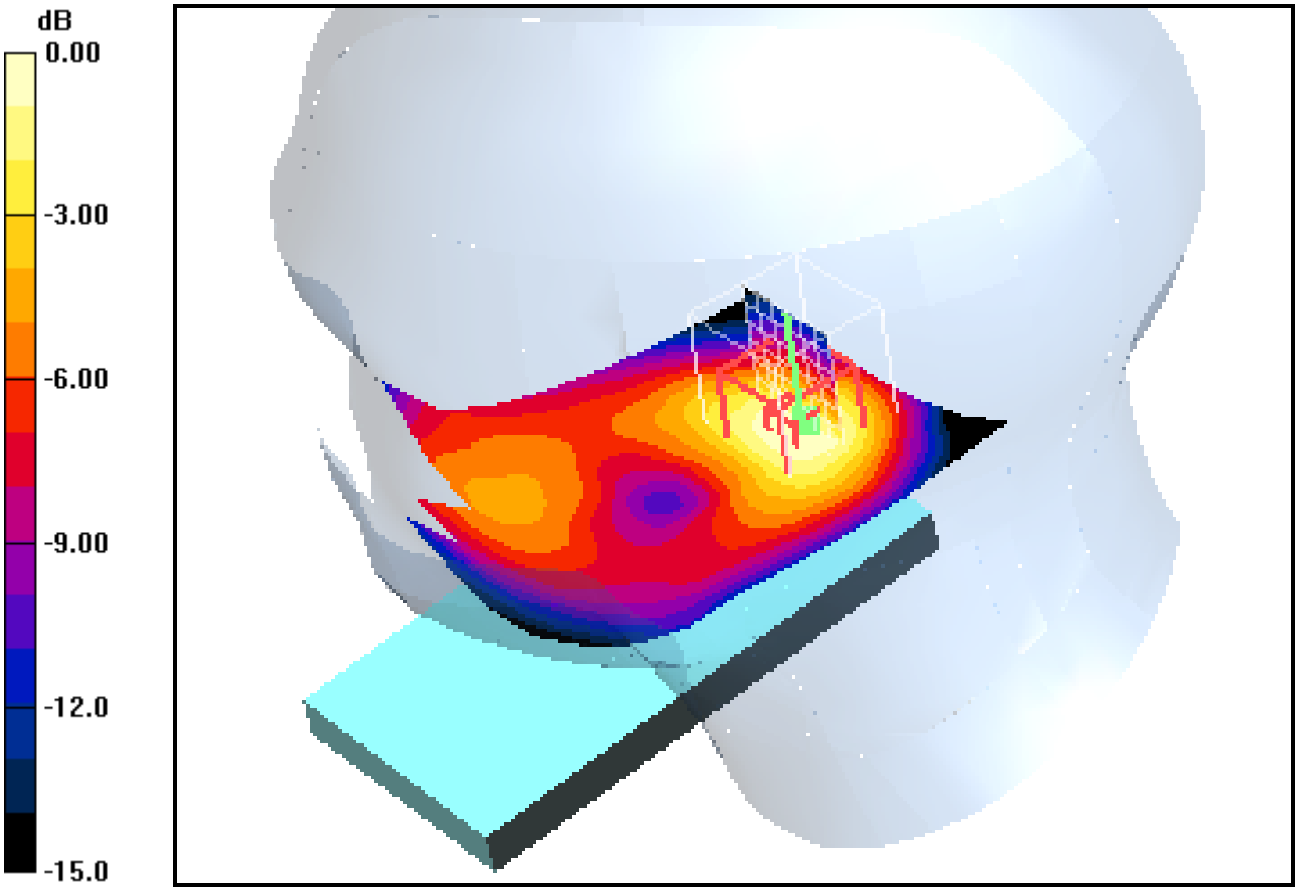

0 dB = 0.273mW/g

Additional information:
ambient temperature: 22.2°C; liquid temperature: 20.8°C

Annex B.4: GSM 1900MHz body

Date/Time: 07.12.2011 10:46:26Date/Time: 07.12.2011 10:53:36

IEEE1528_OET65-Body-GSM1900 GPRS 4TS

DUT: Sony Ericsson; Type: AAD-3880136-BV; Serial: CB511VCC34
Communication System: PCS 1900 GPRS 4TS; Frequency: 1850.2 MHz; Duty Cycle: 1:2
Medium: M1900 Medium parameters used: f = 1850.2 MHz; σ = 1.48 mho/m; ε_r = 52.8; ρ = 1000 kg/m^3
Phantom section: Flat Section
DASY4 Configuration:
- Probe: ET3DV6 - SN1558; ConvF(4.3, 4.3, 4.3); Calibrated: 23.08.2011
- Sensor-Surface: 4mm (Mechanical And Optical Surface Detection)
- Electronics: DAE3 Sn413; Calibrated: 13.01.2011
- Phantom: SAM 12; Type: SAM; Serial: 1043
- Measurement SW: DASY4, V4.5 Build 19; Postprocessing SW: SEMCAD, V1.8 Build 146

Front position - Low/Area Scan (51x91x1): Measurement grid: dx=15mm, dy=15mm

Maximum value of SAR (interpolated) = 0.903 mW/g

Front position - Low/Zoom Scan (7x7x7) (7x7x7)/Cube 0: Measurement grid: dx=5mm, dy=5mm, dz=5mm

Reference Value = 24.9 V/m; Power Drift = -0.135 dB
Peak SAR (extrapolated) = 1.19 W/kg
SAR(1 g) = 0.740 mW/g; SAR(10 g) = 0.468 mW/g
Maximum value of SAR (measured) = 0.797 mW/g

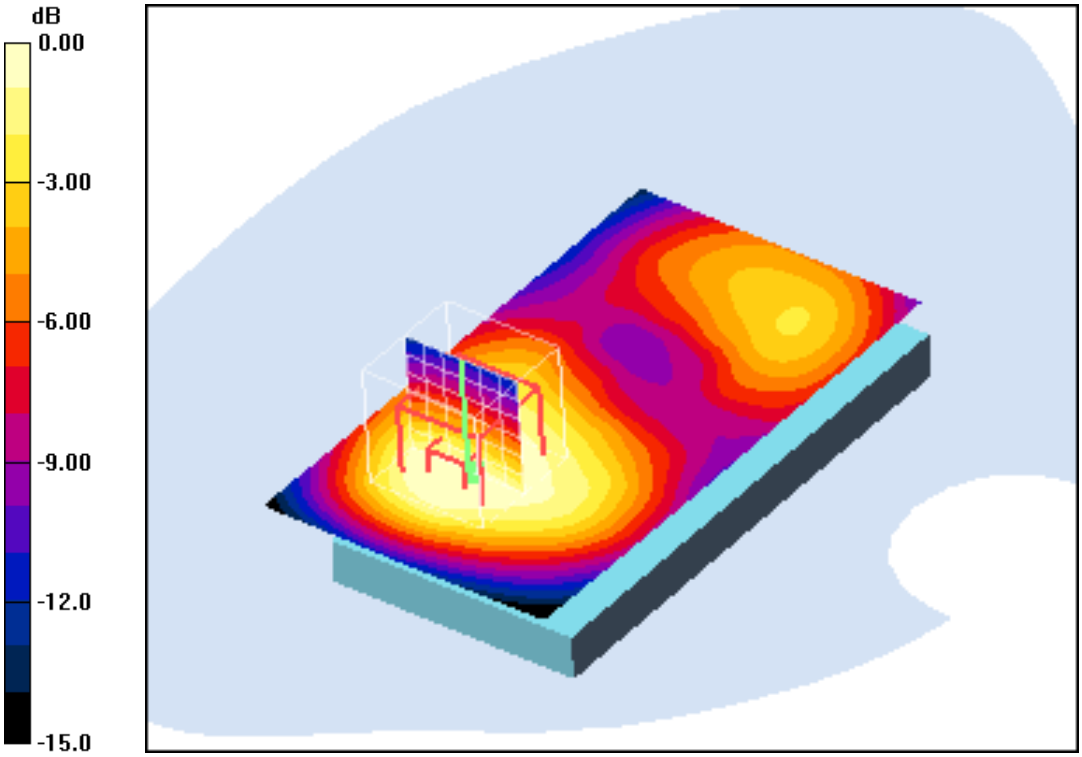

0 dB = 0.797mW/g

Additional information:
position or distance of DUT to SAM: 10 mm
ambient temperature: 22.5°C; liquid temperature: 22.4°C

Date/Time: 07.12.2011 11:08:10Date/Time: 07.12.2011 11:14:29

IEEE1528_OET65-Body-GSM1900 GPRS 4TS

DUT: Sony Ericsson; Type: AAD-3880136-BV; Serial: CB511VCC34
Communication System: PCS 1900 GPRS 4TS; Frequency: 1880 MHz; Duty Cycle: 1:2
Medium: M1900 Medium parameters used: f = 1880 MHz; σ = 1.51 mho/m; ε_r = 52.7; ρ = 1000 kg/m^3
Phantom section: Flat Section
DASY4 Configuration:
- Probe: ET3DV6 - SN1558; ConvF(4.3, 4.3, 4.3); Calibrated: 23.08.2011
- Sensor-Surface: 4mm (Mechanical And Optical Surface Detection)
- Electronics: DAE3 Sn413; Calibrated: 13.01.2011
- Phantom: SAM 12; Type: SAM; Serial: 1043
- Measurement SW: DASY4, V4.5 Build 19; Postprocessing SW: SEMCAD, V1.8 Build 146

Front position - Middle/Area Scan (51x91x1): Measurement grid: dx=15mm, dy=15mm

Maximum value of SAR (interpolated) = 0.873 mW/g

Front position - Middle/Zoom Scan (7x7x7) (7x7x7)/Cube 0: Measurement grid: dx=5mm, dy=5mm, dz=5mm

Reference Value = 24.5 V/m; Power Drift = -0.093 dB
Peak SAR (extrapolated) = 1.27 W/kg
SAR(1 g) = 0.764 mW/g; SAR(10 g) = 0.479 mW/g
Maximum value of SAR (measured) = 0.817 mW/g

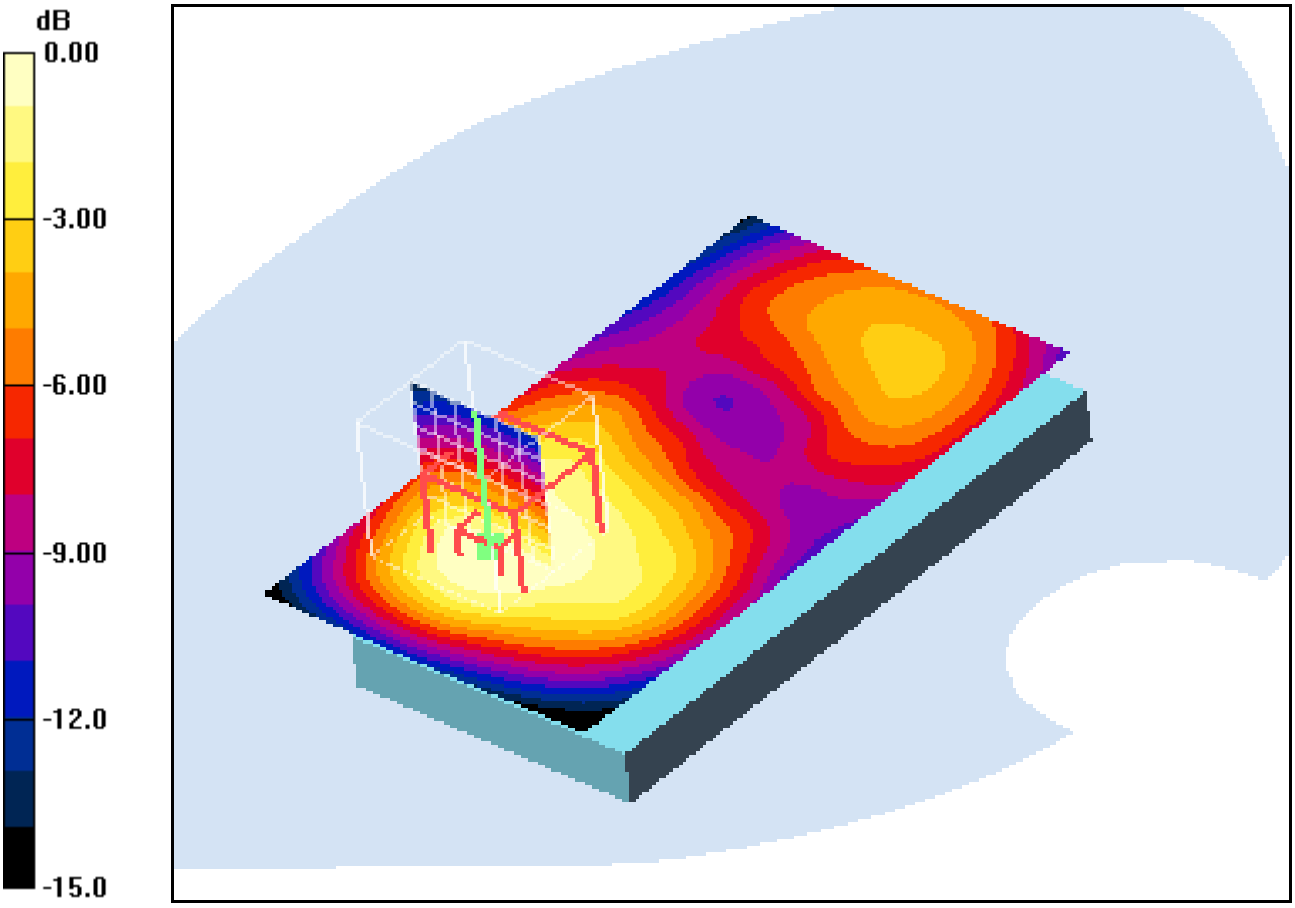

0 dB = 0.817mW/g

Additional information:
position or distance of DUT to SAM: 10 mm
ambient temperature: 22.5°C; liquid temperature: 22.4°C

Date/Time: 07.12.2011 11:47:22Date/Time: 07.12.2011 11:53:46

IEEE1528_OET65-Body-GSM1900 GPRS 4TS

DUT: Sony Ericsson; Type: AAD-3880136-BV; Serial: CB511VCC34
Communication System: PCS 1900 GPRS 4TS; Frequency: 1909.8 MHz; Duty Cycle: 1:2
Medium: M1900 Medium parameters used: f = 1909.8 MHz; σ = 1.55 mho/m; ε_r = 52.6; ρ = 1000 kg/m^3
Phantom section: Flat Section
DASY4 Configuration:
- Probe: ET3DV6 - SN1558; ConvF(4.3, 4.3, 4.3); Calibrated: 23.08.2011
- Sensor-Surface: 4mm (Mechanical And Optical Surface Detection)
- Electronics: DAE3 Sn413; Calibrated: 13.01.2011
- Phantom: SAM 12; Type: SAM; Serial: 1043
- Measurement SW: DASY4, V4.5 Build 19; Postprocessing SW: SEMCAD, V1.8 Build 146

Front position - High/Area Scan (51x91x1): Measurement grid: dx=15mm, dy=15mm

Maximum value of SAR (interpolated) = 0.746 mW/g

Front position - High/Zoom Scan (7x7x7) (7x7x7)/Cube 0: Measurement grid: dx=5mm, dy=5mm, dz=5mm

Reference Value = 22.6 V/m; Power Drift = -0.033 dB
Peak SAR (extrapolated) = 1.16 W/kg
SAR(1 g) = 0.675 mW/g; SAR(10 g) = 0.416 mW/g
Maximum value of SAR (measured) = 0.726 mW/g

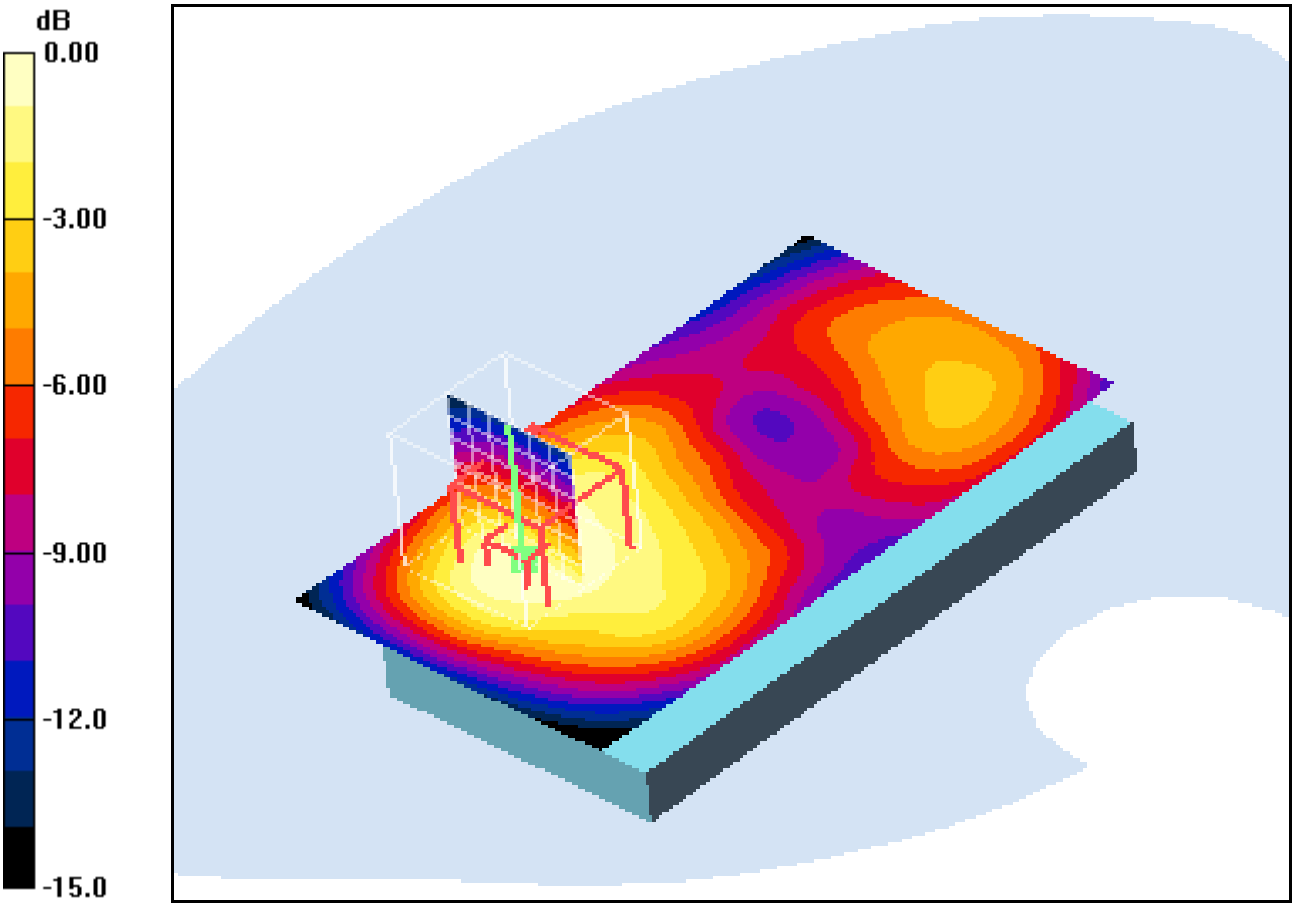

0 dB = 0.726mW/g

Additional information:
position or distance of DUT to SAM: 10 mm
ambient temperature: 22.5°C; liquid temperature: 22.4°C

Date/Time: 07.12.2011 15:03:13Date/Time: 07.12.2011 15:10:19

IEEE1528_OET65-Body-GSM1900 GPRS 4TS

DUT: Sony Ericsson; Type: AAD-3880136-BV; Serial: CB511VCC34
Communication System: PCS 1900 GPRS 4TS; Frequency: 1850.2 MHz; Duty Cycle: 1:2
Medium: M1900 Medium parameters used: f = 1850.2 MHz; σ = 1.48 mho/m; ε_r = 52.8; ρ = 1000 kg/m^3
Phantom section: Flat Section
DASY4 Configuration:
- Probe: ET3DV6 - SN1558; ConvF(4.3, 4.3, 4.3); Calibrated: 23.08.2011
- Sensor-Surface: 4mm (Mechanical And Optical Surface Detection)
- Electronics: DAE3 Sn413; Calibrated: 13.01.2011
- Phantom: SAM 12; Type: SAM; Serial: 1043
- Measurement SW: DASY4, V4.5 Build 19; Postprocessing SW: SEMCAD, V1.8 Build 146

Rear position - Low/Area Scan (51x91x1): Measurement grid: dx=15mm, dy=15mm

Maximum value of SAR (interpolated) = 0.796 mW/g

Rear position - Low/Zoom Scan (7x7x7) (7x7x7)/Cube 0: Measurement grid: dx=5mm, dy=5mm, dz=5mm

Reference Value = 23.3 V/m; Power Drift = 0.106 dB
Peak SAR (extrapolated) = 1.18 W/kg
SAR(1 g) = 0.777 mW/g; SAR(10 g) = 0.488 mW/g
Maximum value of SAR (measured) = 0.848 mW/g

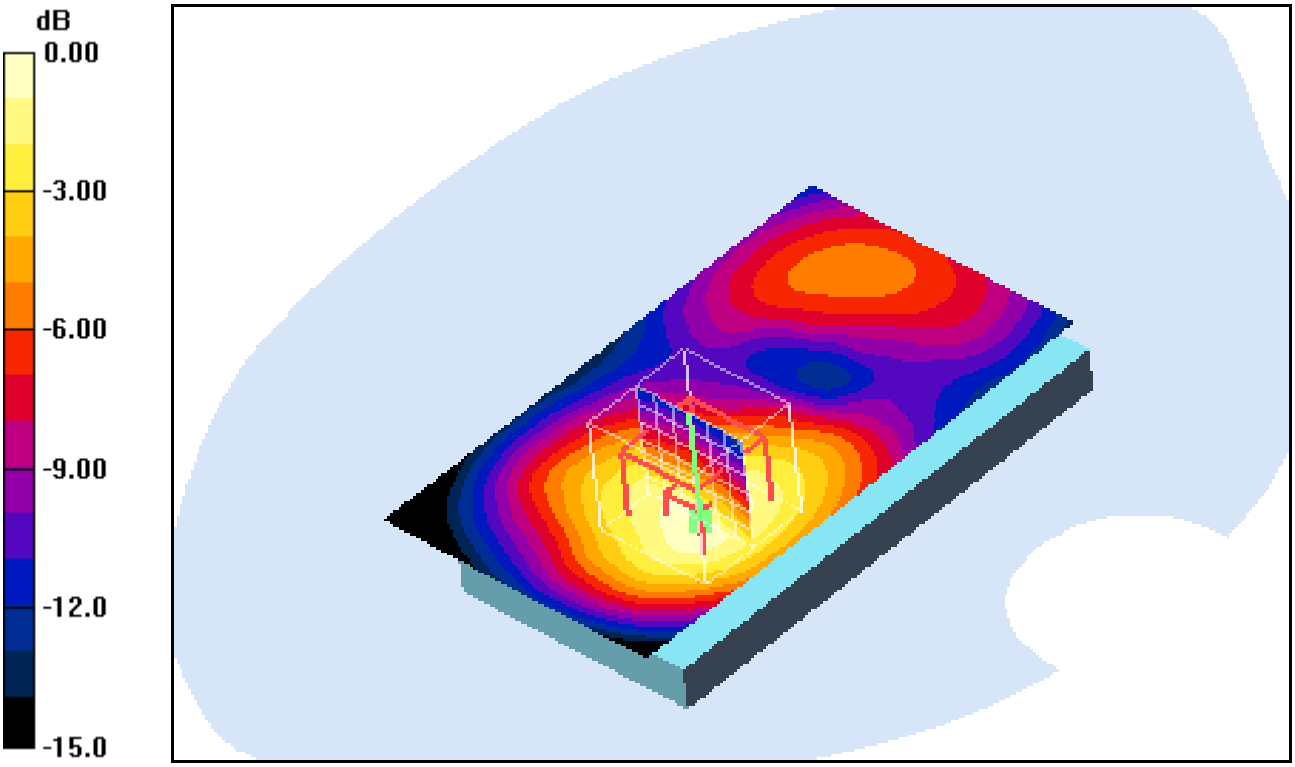

0 dB = 0.848mW/g

Additional information:
position or distance of DUT to SAM: 10 mm
ambient temperature: 22.5°C; liquid temperature: 22.4°C

Date/Time: 07.12.2011 15:24:35Date/Time: 07.12.2011 15:31:04

IEEE1528_OET65-Body-GSM1900 GPRS 4TS

DUT: Sony Ericsson; Type: AAD-3880136-BV; Serial: CB511VCC34
Communication System: PCS 1900 GPRS 4TS; Frequency: 1880 MHz; Duty Cycle: 1:2
Medium: M1900 Medium parameters used: f = 1880 MHz; σ = 1.51 mho/m; ε_r = 52.7; ρ = 1000 kg/m^3
Phantom section: Flat Section
DASY4 Configuration:
- Probe: ET3DV6 - SN1558; ConvF(4.3, 4.3, 4.3); Calibrated: 23.08.2011
- Sensor-Surface: 4mm (Mechanical And Optical Surface Detection)
- Electronics: DAE3 Sn413; Calibrated: 13.01.2011
- Phantom: SAM 12; Type: SAM; Serial: 1043
- Measurement SW: DASY4, V4.5 Build 19; Postprocessing SW: SEMCAD, V1.8 Build 146

Rear position - Middle/Area Scan (51x91x1): Measurement grid: dx=15mm, dy=15mm

Maximum value of SAR (interpolated) = 0.763 mW/g

Rear position - Middle/Zoom Scan (7x7x7) (7x7x7)/Cube 0: Measurement grid: dx=5mm, dy=5mm, dz=5mm

Reference Value = 22.9 V/m; Power Drift = -0.00 dB
Peak SAR (extrapolated) = 1.05 W/kg
SAR(1 g) = 0.690 mW/g; SAR(10 g) = 0.436 mW/g
Maximum value of SAR (measured) = 0.747 mW/g

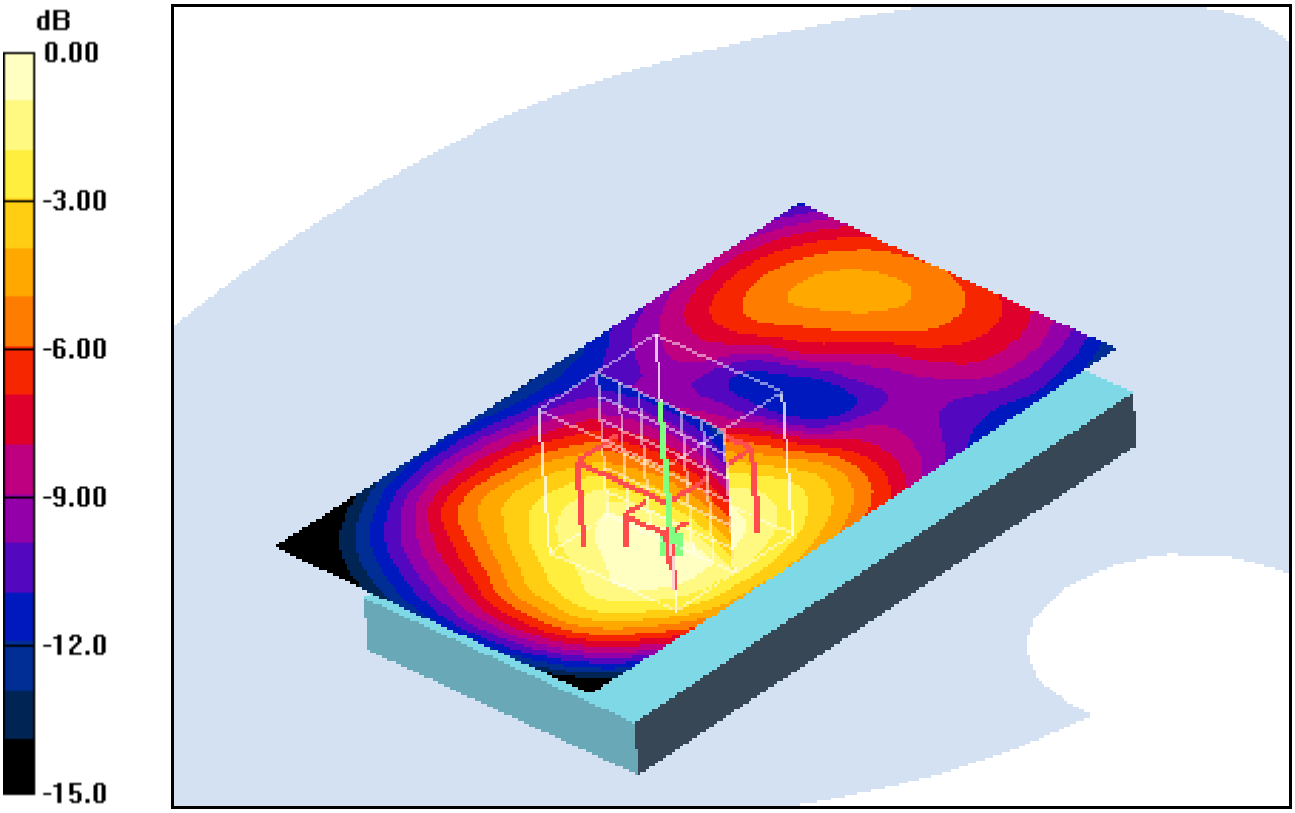

0 dB = 0.747mW/g

Additional information:
position or distance of DUT to SAM: 10 mm
ambient temperature: 22.5°C; liquid temperature: 22.4°C

Date/Time: 07.12.2011 15:45:13Date/Time: 07.12.2011 15:51:41

IEEE1528_OET65-Body-GSM1900 GPRS 4TS

DUT: Sony Ericsson; Type: AAD-3880136-BV; Serial: CB511VCC34
Communication System: PCS 1900 GPRS 4TS; Frequency: 1909.8 MHz; Duty Cycle: 1:2
Medium: M1900 Medium parameters used: f = 1909.8 MHz; σ = 1.55 mho/m; ε_r = 52.6; ρ = 1000 kg/m^3
Phantom section: Flat Section
DASY4 Configuration:
- Probe: ET3DV6 - SN1558; ConvF(4.3, 4.3, 4.3); Calibrated: 23.08.2011
- Sensor-Surface: 4mm (Mechanical And Optical Surface Detection)
- Electronics: DAE3 Sn413; Calibrated: 13.01.2011
- Phantom: SAM 12; Type: SAM; Serial: 1043
- Measurement SW: DASY4, V4.5 Build 19; Postprocessing SW: SEMCAD, V1.8 Build 146

Rear position - High/Area Scan (51x91x1): Measurement grid: dx=15mm, dy=15mm

Maximum value of SAR (interpolated) = 0.678 mW/g

Rear position - High/Zoom Scan (7x7x7) (7x7x7)/Cube 0: Measurement grid: dx=5mm, dy=5mm, dz=5mm

Reference Value = 21.4 V/m; Power Drift = 0.085 dB
Peak SAR (extrapolated) = 0.939 W/kg
SAR(1 g) = 0.623 mW/g; SAR(10 g) = 0.394 mW/g
Maximum value of SAR (measured) = 0.667 mW/g

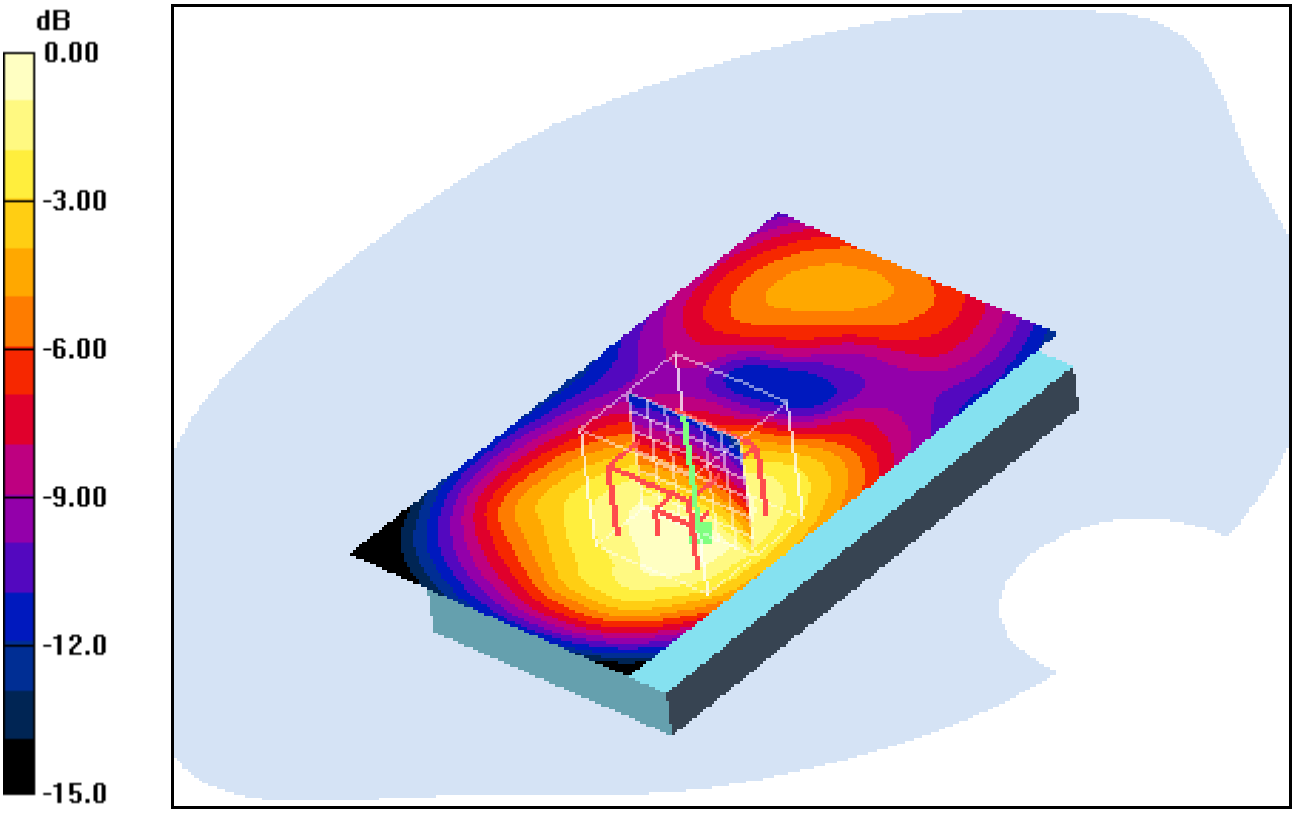

0 dB = 0.667mW/g

Additional information:
position or distance of DUT to SAM: 10 mm
ambient temperature: 22.5°C; liquid temperature: 22.4°C

Date/Time: 07.12.2011 12:40:38Date/Time: 07.12.2011 12:48:45

IEEE1528_OET65-Body-GSM1900 GPRS 4TS

DUT: Sony Ericsson; Type: AAD-3880136-BV; Serial: CB511VCC34
Communication System: PCS 1900 GPRS 4TS; Frequency: 1880 MHz; Duty Cycle: 1:2
Medium: M1900 Medium parameters used: f = 1880 MHz; σ = 1.51 mho/m; ε_r = 52.7; ρ = 1000 kg/m^3
Phantom section: Flat Section
DASY4 Configuration:
- Probe: ET3DV6 - SN1558; ConvF(4.3, 4.3, 4.3); Calibrated: 23.08.2011
- Sensor-Surface: 4mm (Mechanical And Optical Surface Detection)
- Electronics: DAE3 Sn413; Calibrated: 13.01.2011
- Phantom: SAM 12; Type: SAM; Serial: 1043
- Measurement SW: DASY4, V4.5 Build 19; Postprocessing SW: SEMCAD, V1.8 Build 146

Edge left position - Middle/Area Scan (51x91x1): Measurement grid: dx=15mm, dy=15mm

Maximum value of SAR (interpolated) = 0.380 mW/g

Edge left position - Middle/Zoom Scan (7x7x7) (7x7x7)/Cube 0: Measurement grid: dx=5mm, dy=5mm, dz=5mm

Reference Value = 15.4 V/m; Power Drift = -0.068 dB
Peak SAR (extrapolated) = 0.543 W/kg
SAR(1 g) = 0.331 mW/g; SAR(10 g) = 0.198 mW/g
Maximum value of SAR (measured) = 0.362 mW/g

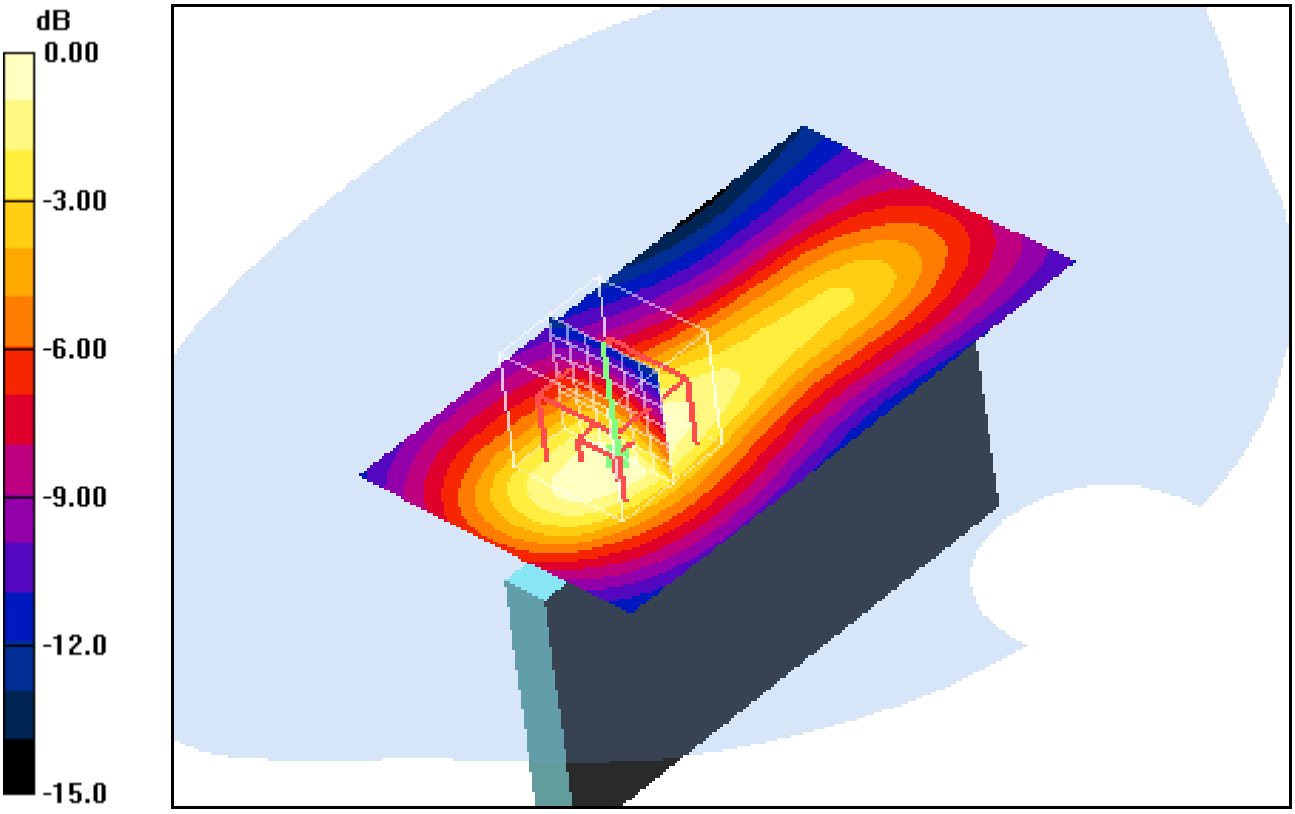

0 dB = 0.362mW/g

Additional information:
position or distance of DUT to SAM: 10 mm
ambient temperature: 22.5°C; liquid temperature: 22.4°C

Date/Time: 07.12.2011 12:08:13Date/Time: 07.12.2011 12:16:11Date/Time: 07.12.2011 12:27:37

IEEE1528_OET65-Body-GSM1900 GPRS 4TS

DUT: Sony Ericsson; Type: AAD-3880136-BV; Serial: CB511VCC34
Communication System: PCS 1900 GPRS 4TS; Frequency: 1880 MHz; Duty Cycle: 1:2
Medium: M1900 Medium parameters used: f = 1880 MHz; σ = 1.51 mho/m; ε_r = 52.7; ρ = 1000 kg/m^3
Phantom section: Flat Section
DASY4 Configuration:
- Probe: ET3DV6 - SN1558; ConvF(4.3, 4.3, 4.3); Calibrated: 23.08.2011
- Sensor-Surface: 4mm (Mechanical And Optical Surface Detection)
- Electronics: DAE3 Sn413; Calibrated: 13.01.2011
- Phantom: SAM 12; Type: SAM; Serial: 1043
- Measurement SW: DASY4, V4.5 Build 19; Postprocessing SW: SEMCAD, V1.8 Build 146

Edge right position - Middle/Area Scan (51x91x1): Measurement grid: dx=15mm, dy=15mm

Maximum value of SAR (interpolated) = 0.187 mW/g

Edge right position - Middle/Zoom Scan (7x7x7) (7x7x7)/Cube 0: Measurement grid: dx=5mm, dy=5mm, dz=5mm

Reference Value = 11.0 V/m; Power Drift = -0.186 dB
Peak SAR (extrapolated) = 0.248 W/kg
SAR(1 g) = 0.160 mW/g; SAR(10 g) = 0.099 mW/g
Maximum value of SAR (measured) = 0.173 mW/g

Edge right position - Middle/Zoom Scan (7x7x7) (7x7x7)/Cube 1: Measurement grid: dx=5mm, dy=5mm, dz=5mm

Reference Value = 11.0 V/m; Power Drift = -0.186 dB
Peak SAR (extrapolated) = 0.176 W/kg
SAR(1 g) = 0.110 mW/g; SAR(10 g) = 0.068 mW/g
Maximum value of SAR (measured) = 0.119 mW/g

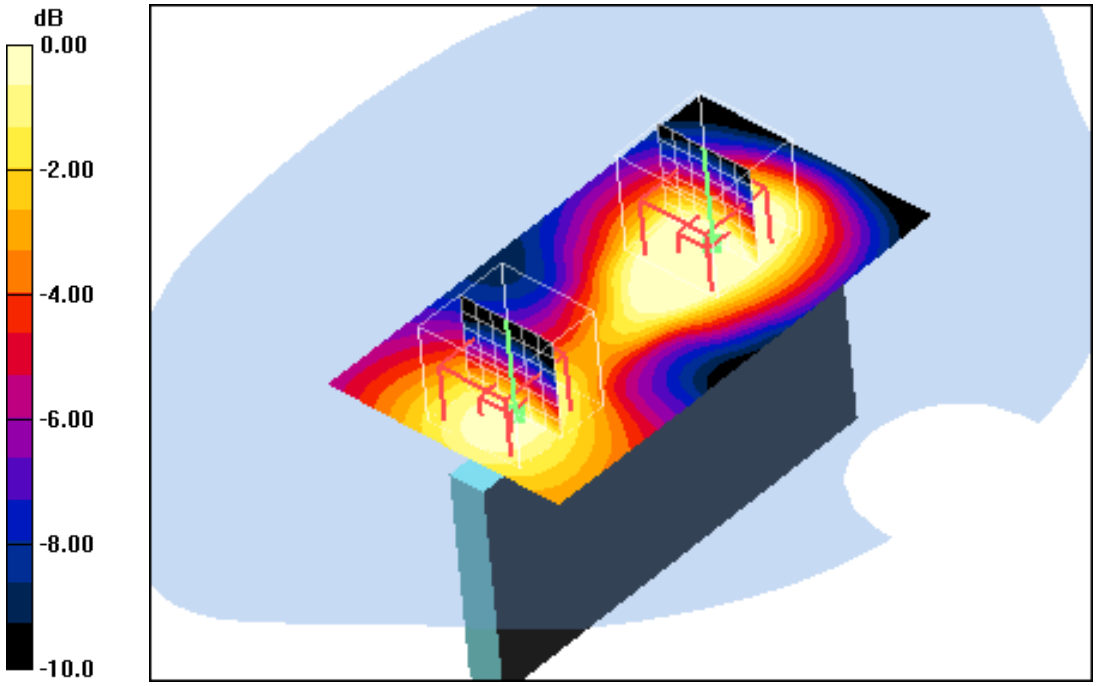

0 dB = 0.119mW/g

Additional information:
position or distance of DUT to SAM: 10 mm
ambient temperature: 22.5°C; liquid temperature: 22.4°C

Date/Time: 07.12.2011 14:29:34Date/Time: 07.12.2011 14:36:48Date/Time: 07.12.2011 14:48:12

IEEE1528_OET65-Body-GSM1900 GPRS 4TS

DUT: Sony Ericsson; Type: AAD-3880136-BV; Serial: CB511VCC34
Communication System: PCS 1900 GPRS 4TS; Frequency: 1880 MHz; Duty Cycle: 1:2
Medium: M1900 Medium parameters used: f = 1880 MHz; σ = 1.51 mho/m; ε_r = 52.7; ρ = 1000 kg/m^3
Phantom section: Flat Section
DASY4 Configuration:
- Probe: ET3DV6 - SN1558; ConvF(4.3, 4.3, 4.3); Calibrated: 23.08.2011
- Sensor-Surface: 4mm (Mechanical And Optical Surface Detection)
- Electronics: DAE3 Sn413; Calibrated: 13.01.2011
- Phantom: SAM 12; Type: SAM; Serial: 1043
- Measurement SW: DASY4, V4.5 Build 19; Postprocessing SW: SEMCAD, V1.8 Build 146

Edge bottom position - Middle/Area Scan (61x61x1): Measurement grid: dx=15mm, dy=15mm

Maximum value of SAR (interpolated) = 0.165 mW/g

Edge bottom position - Middle/Zoom Scan (7x7x7) (7x7x7)/Cube 0:

Measurement grid: dx=5mm, dy=5mm, dz=5mm
Reference Value = 10.4 V/m; Power Drift = 0.187 dB
Peak SAR (extrapolated) = 0.212 W/kg
SAR(1 g) = 0.136 mW/g; SAR(10 g) = 0.087 mW/g
Maximum value of SAR (measured) = 0.148 mW/g

Edge bottom position - Middle/Zoom Scan (7x7x7) (7x7x7)/Cube 1:

Measurement grid: dx=5mm, dy=5mm, dz=5mm
Reference Value = 10.4 V/m; Power Drift = 0.187 dB
Peak SAR (extrapolated) = 0.273 W/kg
SAR(1 g) = 0.142 mW/g; SAR(10 g) = 0.087 mW/g
Maximum value of SAR (measured) = 0.153 mW/g

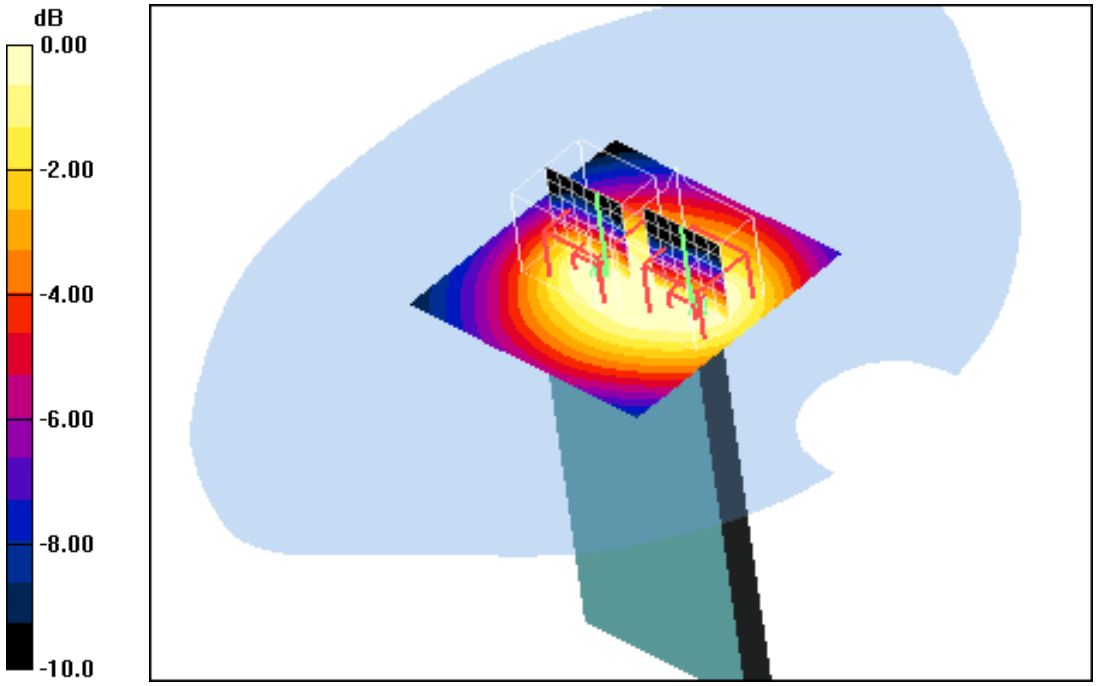

0 dB = 0.153mW/g

Additional information:
position or distance of DUT to SAM: 10 mm
ambient temperature: 22.5°C; liquid temperature: 22.4°C

Date/Time: 07.12.2011 16:09:53Date/Time: 07.12.2011 16:16:12

IEEE1528_OET65-Body-GSM1900 1TS

DUT: Sony Ericsson; Type: AAD-3880136-BV; Serial: CB511VCC34
Communication System: GSM 1900; Frequency: 1850.2 MHz; Duty Cycle: 1:8
Medium: M1900 Medium parameters used: f = 1850.2 MHz; σ = 1.48 mho/m; ε_r = 52.8; ρ = 1000 kg/m^3
Phantom section: Flat Section
DASY4 Configuration:
- Probe: ET3DV6 - SN1558; ConvF(4.3, 4.3, 4.3); Calibrated: 23.08.2011
- Sensor-Surface: 4mm (Mechanical And Optical Surface Detection)
- Electronics: DAE3 Sn413; Calibrated: 13.01.2011
- Phantom: SAM 12; Type: SAM; Serial: 1043
- Measurement SW: DASY4, V4.5 Build 19; Postprocessing SW: SEMCAD, V1.8 Build 146

Rear position - Low/Area Scan (51x91x1): Measurement grid: dx=15mm, dy=15mm

Maximum value of SAR (interpolated) = 0.365 mW/g

Rear position - Low/Zoom Scan (7x7x7) (7x7x7)/Cube 0: Measurement grid: dx=5mm, dy=5mm, dz=5mm

Reference Value = 16.2 V/m; Power Drift = 0.119 dB
Peak SAR (extrapolated) = 0.514 W/kg
SAR(1 g) = 0.344 mW/g; SAR(10 g) = 0.222 mW/g
Maximum value of SAR (measured) = 0.369 mW/g

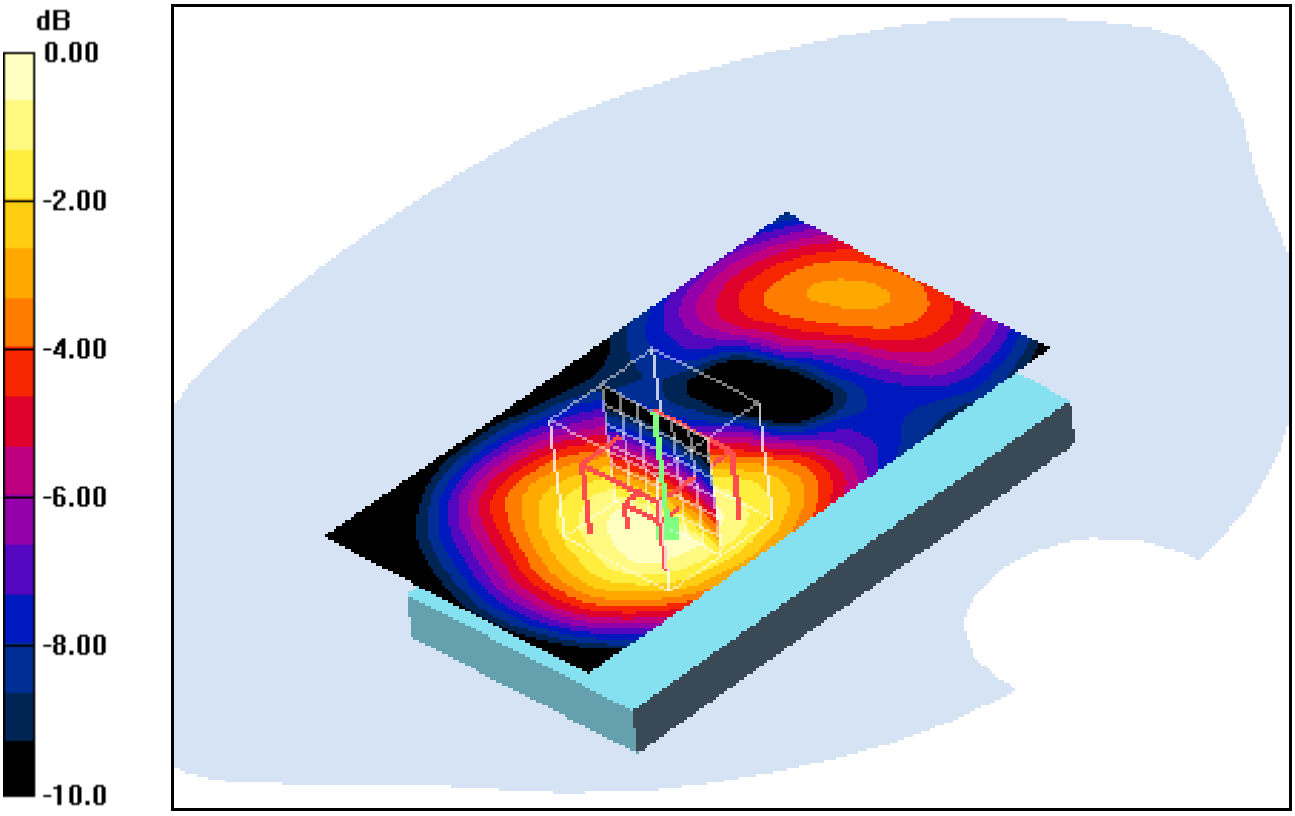

0 dB = 0.369mW/g

Additional information:
position or distance of DUT to SAM: 15 mm
ambient temperature: 22.5°C; liquid temperature: 22.4°C

Annex B.5: WCDMA FDD V 835MHz head

Date/Time: 30.11.2011 11:56:28Date/Time: 30.11.2011 12:04:21

IEEE1528_OET65-LeftHandSide-WCDMA FDD V

DUT: Sony Ericsson; Type: AAD-3880136-BV; Serial: CB511VCC34
Communication System: WCDMA FDD V; Frequency: 826.4 MHz; Duty Cycle: 1:1
Medium: HSL850 Medium parameters used (interpolated): f = 826.4 MHz; σ = 0.894 mho/m; ε_r = 42.5; ρ = 1000 kg/m^3
Phantom section: Left Section
DASY4 Configuration:
- Probe: ET3DV6 - SN1558; ConvF(5.95, 5.95, 5.95); Calibrated: 23.08.2011
- Sensor-Surface: 4mm (Mechanical And Optical Surface Detection)
- Electronics: DAE3 Sn413; Calibrated: 13.01.2011
- Phantom: SAM 12; Type: SAM; Serial: 1043
- Measurement SW: DASY4, V4.5 Build 19; Postprocessing SW: SEMCAD, V1.8 Build 146

Touch position - Low/Area Scan (61x91x1): Measurement grid: dx=15mm, dy=15mm

Maximum value of SAR (interpolated) = 0.739 mW/g

Touch position - Low/Zoom Scan (7x7x7) (7x7x7)/Cube 0: Measurement grid: dx=5mm, dy=5mm, dz=5mm

Reference Value = 29.8 V/m; Power Drift = 0.073 dB
Peak SAR (extrapolated) = 0.867 W/kg
SAR(1 g) = 0.700 mW/g; SAR(10 g) = 0.525 mW/g
Maximum value of SAR (measured) = 0.738 mW/g

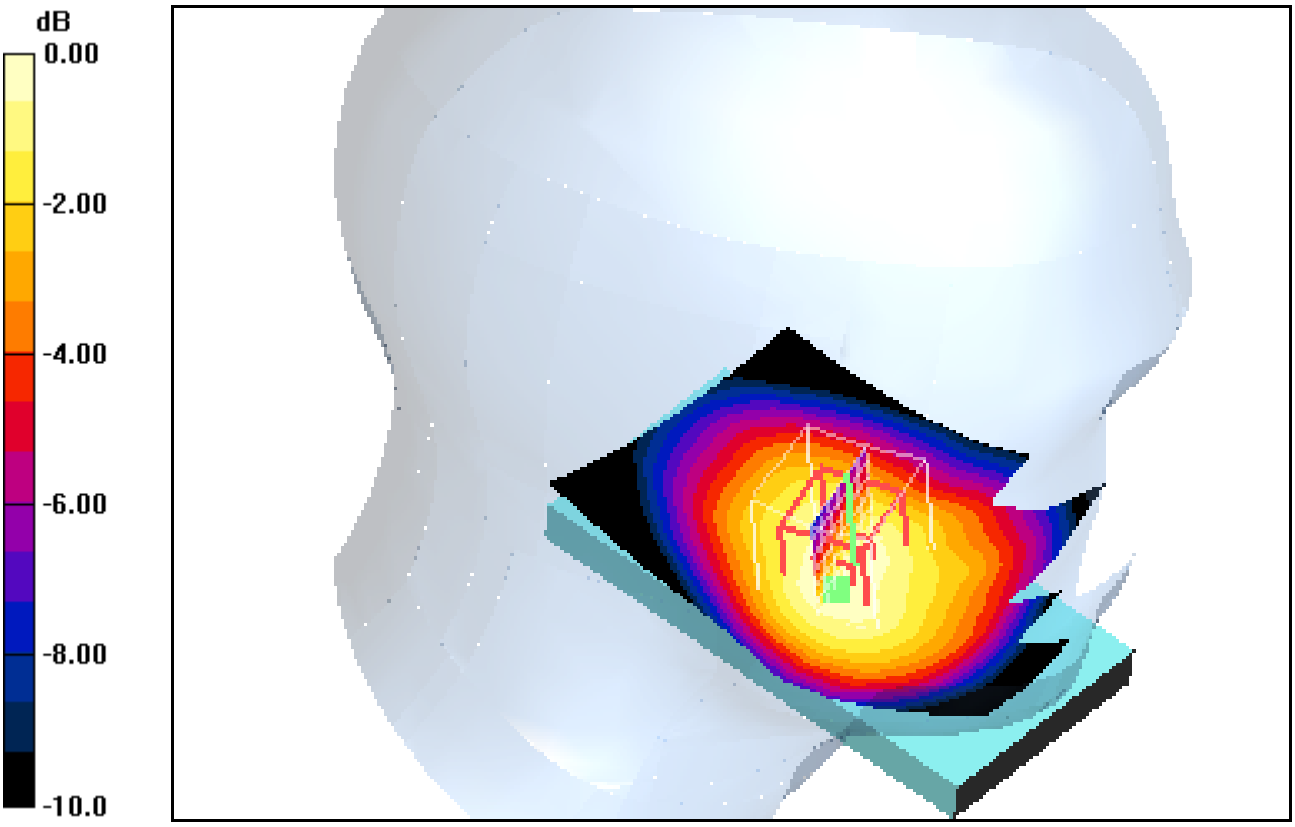

0 dB = 0.738mW/g

Additional information:
ambient temperature: 22.4°C; liquid temperature: 21.9°C

Date/Time: 30.11.2011 12:19:02Date/Time: 30.11.2011 12:26:08

IEEE1528_OET65-LeftHandSide-WCDMA FDD V

DUT: Sony Ericsson; Type: AAD-3880136-BV; Serial: CB511VCC34

Communication System: WCDMA FDD V; Frequency: 836.4 MHz; Duty Cycle: 1:1
Medium: HSL850 Medium parameters used (interpolated): f = 836.4 MHz; σ = 0.91 mho/m; ε_r = 42.4; ρ = 1000 kg/m^3
Phantom section: Left Section
DASY4 Configuration:
- Probe: ET3DV6 - SN1558; ConvF(5.95, 5.95, 5.95); Calibrated: 23.08.2011
- Sensor-Surface: 4mm (Mechanical And Optical Surface Detection)
- Electronics: DAE3 Sn413; Calibrated: 13.01.2011
- Phantom: SAM 12; Type: SAM; Serial: 1043
- Measurement SW: DASY4, V4.5 Build 19; Postprocessing SW: SEMCAD, V1.8 Build 146

Touch position - Middle/Area Scan (61x91x1): Measurement grid: dx=15mm, dy=15mm

Maximum value of SAR (interpolated) = 0.681 mW/g

Touch position - Middle/Zoom Scan (7x7x7) (7x7x7)/Cube 0: Measurement grid: dx=5mm, dy=5mm, dz=5mm

Reference Value = 28.5 V/m; Power Drift = 0.037 dB
Peak SAR (extrapolated) = 0.834 W/kg
SAR(1 g) = 0.645 mW/g; SAR(10 g) = 0.480 mW/g
Maximum value of SAR (measured) = 0.679 mW/g

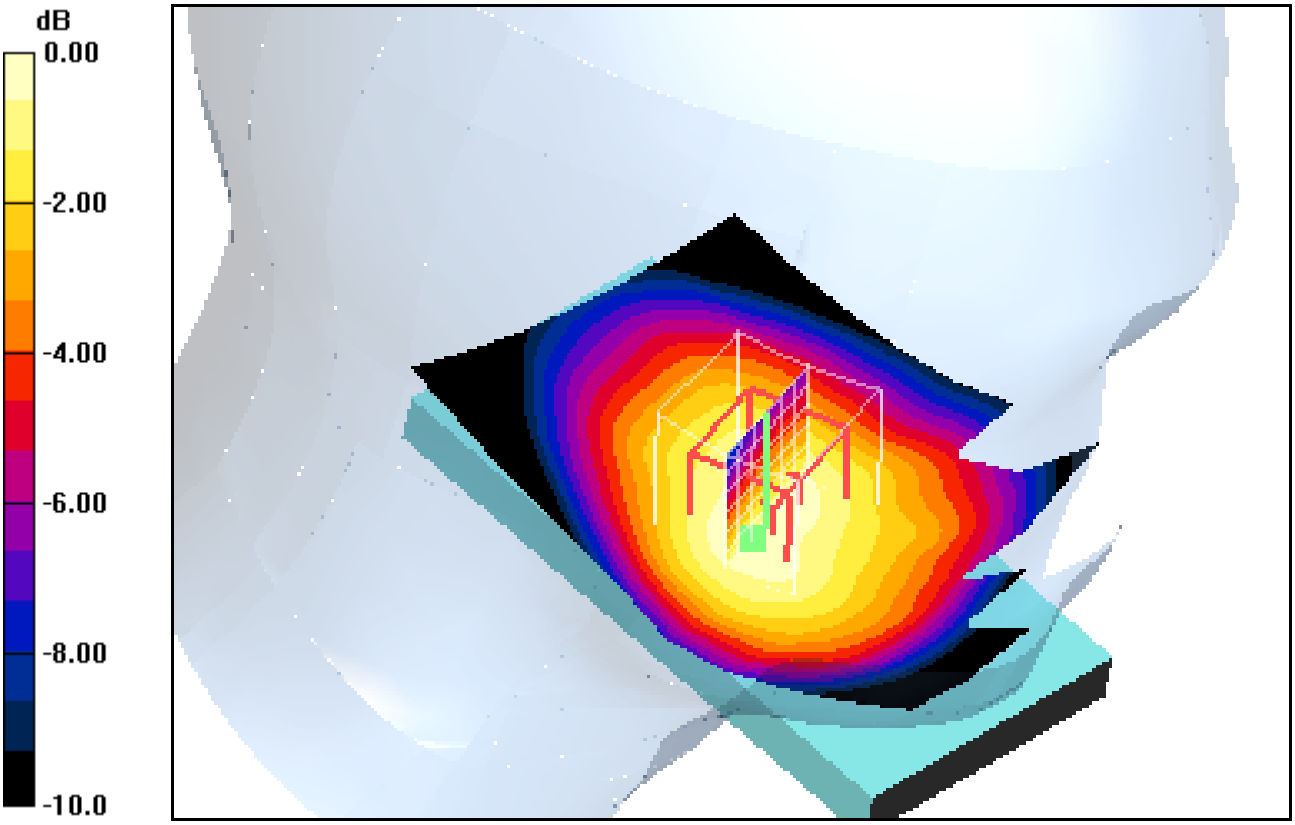

0 dB = 0.679mW/g

Additional information:
ambient temperature: 22.4°C; liquid temperature: 21.9°C

Date/Time: 30.11.2011 12:40:42Date/Time: 30.11.2011 12:47:48

IEEE1528_OET65-LeftHandSide-WCDMA FDD V

DUT: Sony Ericsson; Type: AAD-3880136-BV; Serial: CB511VCC34

Communication System: WCDMA FDD V; Frequency: 846.6 MHz; Duty Cycle: 1:1
Medium: HSL850 Medium parameters used (interpolated): f = 846.6 MHz; σ = 0.918 mho/m; ε_r = 42.2; ρ = 1000 kg/m^3
Phantom section: Left Section
DASY4 Configuration:
- Probe: ET3DV6 - SN1558; ConvF(5.95, 5.95, 5.95); Calibrated: 23.08.2011
- Sensor-Surface: 4mm (Mechanical And Optical Surface Detection)
- Electronics: DAE3 Sn413; Calibrated: 13.01.2011
- Phantom: SAM 12; Type: SAM; Serial: 1043
- Measurement SW: DASY4, V4.5 Build 19; Postprocessing SW: SEMCAD, V1.8 Build 146

Touch position - High/Area Scan (61x91x1): Measurement grid: dx=15mm, dy=15mm

Maximum value of SAR (interpolated) = 0.857 mW/g

Touch position - High/Zoom Scan (7x7x7) (7x7x7)/Cube 0: Measurement grid: dx=5mm, dy=5mm, dz=5mm

Reference Value = 31.8 V/m; Power Drift = 0.086 dB
Peak SAR (extrapolated) = 1.07 W/kg
SAR(1 g) = 0.831 mW/g; SAR(10 g) = 0.613 mW/g
Maximum value of SAR (measured) = 0.879 mW/g

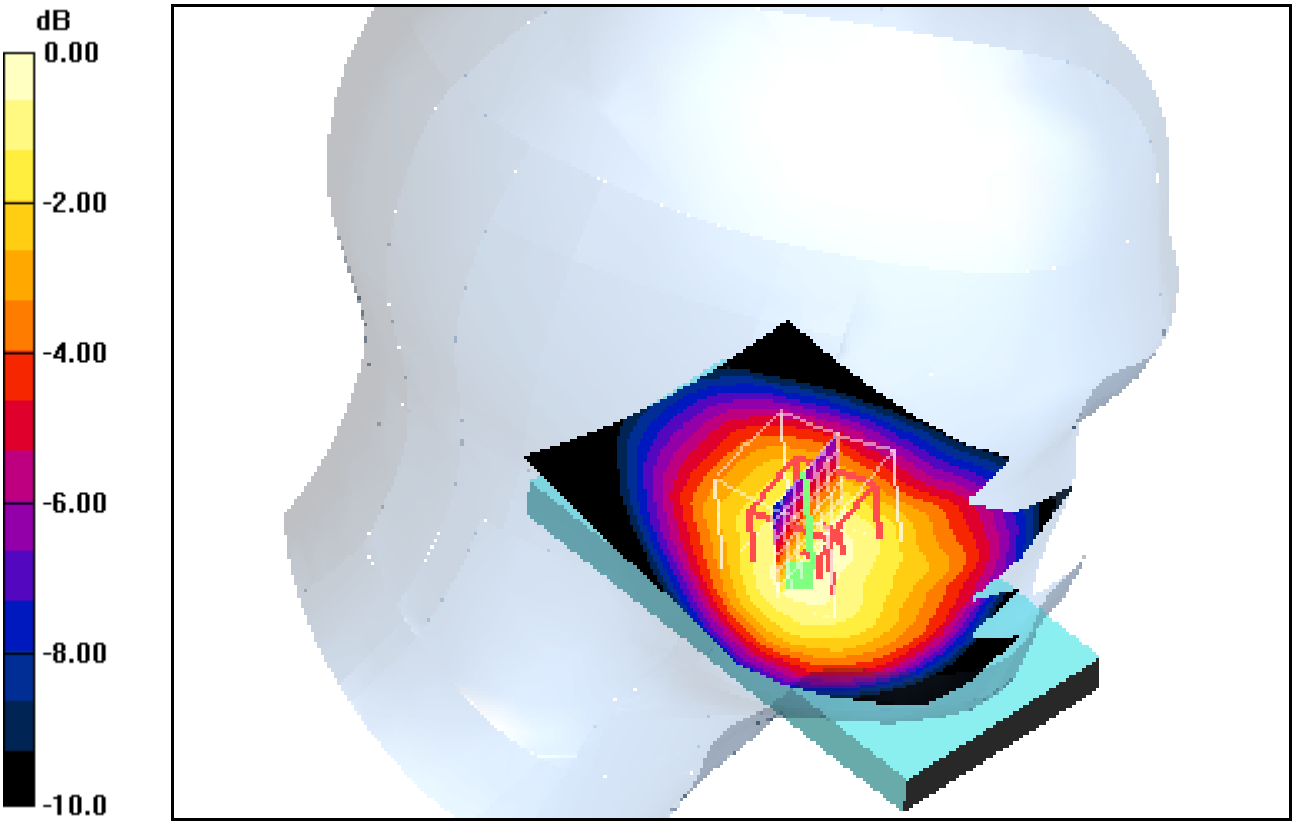

0 dB = 0.879mW/g

Additional information:
ambient temperature: 22.4°C; liquid temperature: 21.9°C

Date/Time: 30.11.2011 13:58:28Date/Time: 30.11.2011 14:06:07

IEEE1528_OET65-LeftHandSide-WCDMA FDD V

DUT: Sony Ericsson; Type: AAD-3880136-BV; Serial: CB511VCC34

Communication System: WCDMA FDD V; Frequency: 826.4 MHz; Duty Cycle: 1:1
Medium: HSL850 Medium parameters used (interpolated): f = 826.4 MHz; σ = 0.894 mho/m; ε_r = 42.5; ρ = 1000 kg/m^3
Phantom section: Left Section
DASY4 Configuration:
- Probe: ET3DV6 - SN1558; ConvF(5.95, 5.95, 5.95); Calibrated: 23.08.2011
- Sensor-Surface: 4mm (Mechanical And Optical Surface Detection)
- Electronics: DAE3 Sn413; Calibrated: 13.01.2011
- Phantom: SAM 12; Type: SAM; Serial: 1043
- Measurement SW: DASY4, V4.5 Build 19; Postprocessing SW: SEMCAD, V1.8 Build 146

Tilt position - Low/Area Scan (61x81x1): Measurement grid: dx=15mm, dy=15mm

Maximum value of SAR (interpolated) = 0.421 mW/g

Tilt position - Low/Zoom Scan (7x7x7) (7x11x7)/Cube 0: Measurement grid: dx=5mm, dy=5mm, dz=5mm

Reference Value = 22.2 V/m; Power Drift = 0.084 dB
Peak SAR (extrapolated) = 0.500 W/kg
SAR(1 g) = 0.410 mW/g; SAR(10 g) = 0.310 mW/g
Maximum value of SAR (measured) = 0.427 mW/g

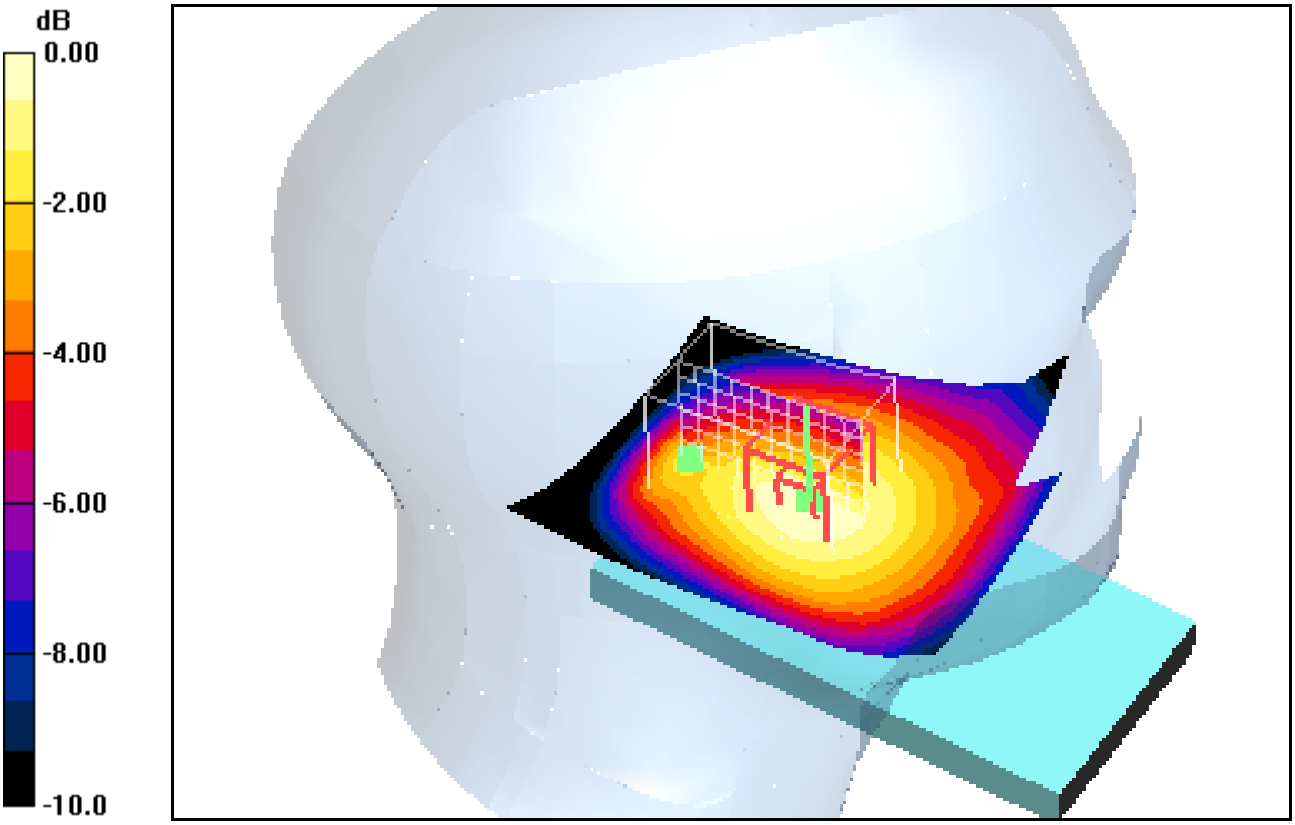

0 dB = 0.427mW/g

Additional information:
ambient temperature: 22.4°C; liquid temperature: 21.9°C

Date/Time: 30.11.2011 13:31:53Date/Time: 30.11.2011 13:40:06

IEEE1528_OET65-LeftHandSide-WCDMA FDD V

DUT: Sony Ericsson; Type: AAD-3880136-BV; Serial: CB511VCC34

Communication System: WCDMA FDD V; Frequency: 836.4 MHz; Duty Cycle: 1:1
Medium: HSL850 Medium parameters used (interpolated): f = 836.4 MHz; σ = 0.91 mho/m; ε_r = 42.4; ρ = 1000 kg/m^3
Phantom section: Left Section
DASY4 Configuration:
- Probe: ET3DV6 - SN1558; ConvF(5.95, 5.95, 5.95); Calibrated: 23.08.2011
- Sensor-Surface: 4mm (Mechanical And Optical Surface Detection)
- Electronics: DAE3 Sn413; Calibrated: 13.01.2011
- Phantom: SAM 12; Type: SAM; Serial: 1043
- Measurement SW: DASY4, V4.5 Build 19; Postprocessing SW: SEMCAD, V1.8 Build 146

Tilt position - Middle/Area Scan (61x81x1): Measurement grid: dx=15mm, dy=15mm

Maximum value of SAR (interpolated) = 0.405 mW/g

Tilt position - Middle/Zoom Scan (7x7x7) (7x11x7)/Cube 0: Measurement grid: dx=5mm, dy=5mm, dz=5mm

Reference Value = 21.8 V/m; Power Drift = -0.00 dB
Peak SAR (extrapolated) = 0.482 W/kg
SAR(1 g) = 0.394 mW/g; SAR(10 g) = 0.298 mW/g
Maximum value of SAR (measured) = 0.408 mW/g

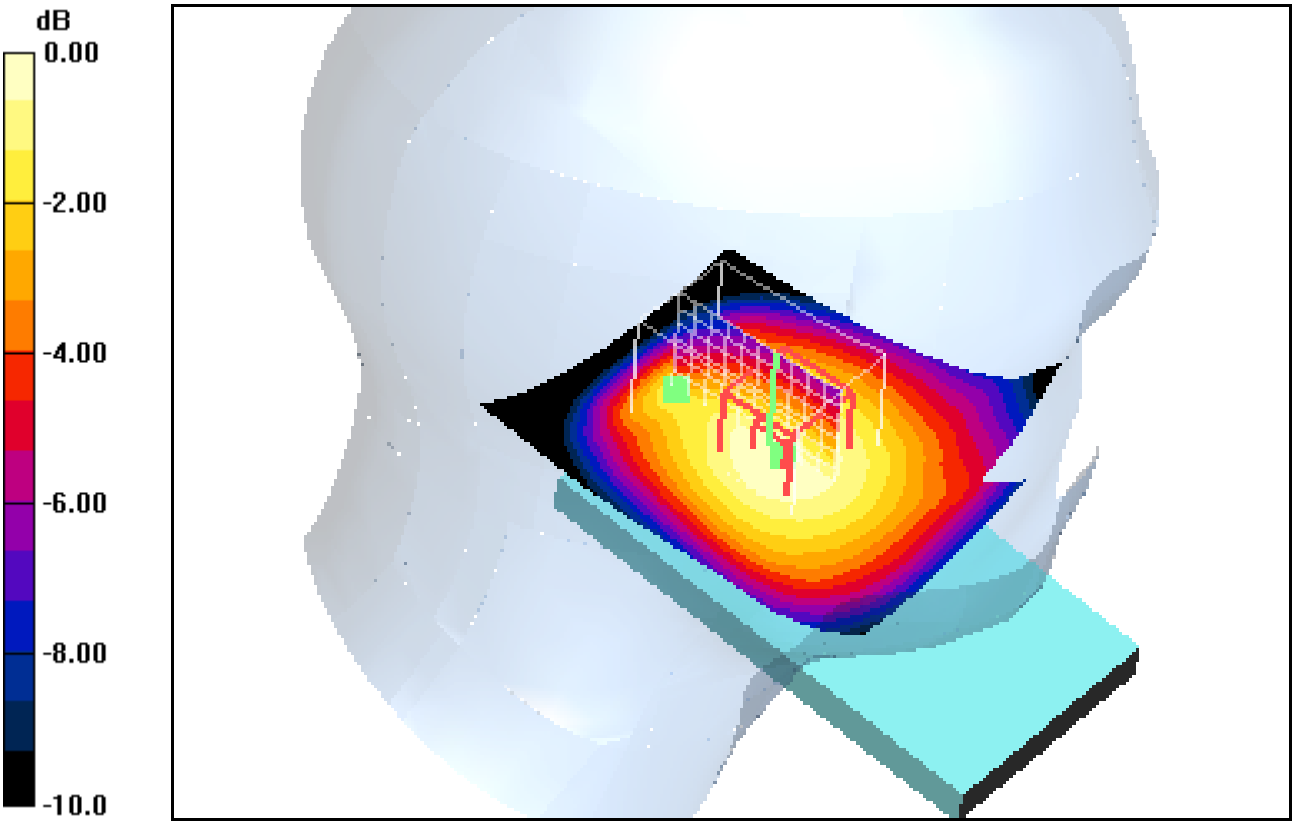

0 dB = 0.408mW/g

Additional information:
ambient temperature: 22.4°C; liquid temperature: 21.9°C

Date/Time: 30.11.2011 13:04:37Date/Time: 30.11.2011 13:13:36

IEEE1528_OET65-LeftHandSide-WCDMA FDD V

DUT: Sony Ericsson; Type: AAD-3880136-BV; Serial: CB511VCC34

Communication System: WCDMA FDD V; Frequency: 846.6 MHz; Duty Cycle: 1:1
Medium: HSL850 Medium parameters used (interpolated): f = 846.6 MHz; σ = 0.918 mho/m; ε_r = 42.2; ρ = 1000 kg/m^3
Phantom section: Left Section
DASY4 Configuration:
- Probe: ET3DV6 - SN1558; ConvF(5.95, 5.95, 5.95); Calibrated: 23.08.2011
- Sensor-Surface: 4mm (Mechanical And Optical Surface Detection)
- Electronics: DAE3 Sn413; Calibrated: 13.01.2011
- Phantom: SAM 12; Type: SAM; Serial: 1043
- Measurement SW: DASY4, V4.5 Build 19; Postprocessing SW: SEMCAD, V1.8 Build 146

Tilt position - High/Area Scan (61x91x1): Measurement grid: dx=15mm, dy=15mm

Maximum value of SAR (interpolated) = 0.536 mW/g

Tilt position - High/Zoom Scan (7x7x7) (7x10x7)/Cube 0: Measurement grid: dx=5mm, dy=5mm, dz=5mm

Reference Value = 25.4 V/m; Power Drift = 0.132 dB
Peak SAR (extrapolated) = 0.652 W/kg
SAR(1 g) = 0.535 mW/g; SAR(10 g) = 0.402 mW/g
Maximum value of SAR (measured) = 0.561 mW/g

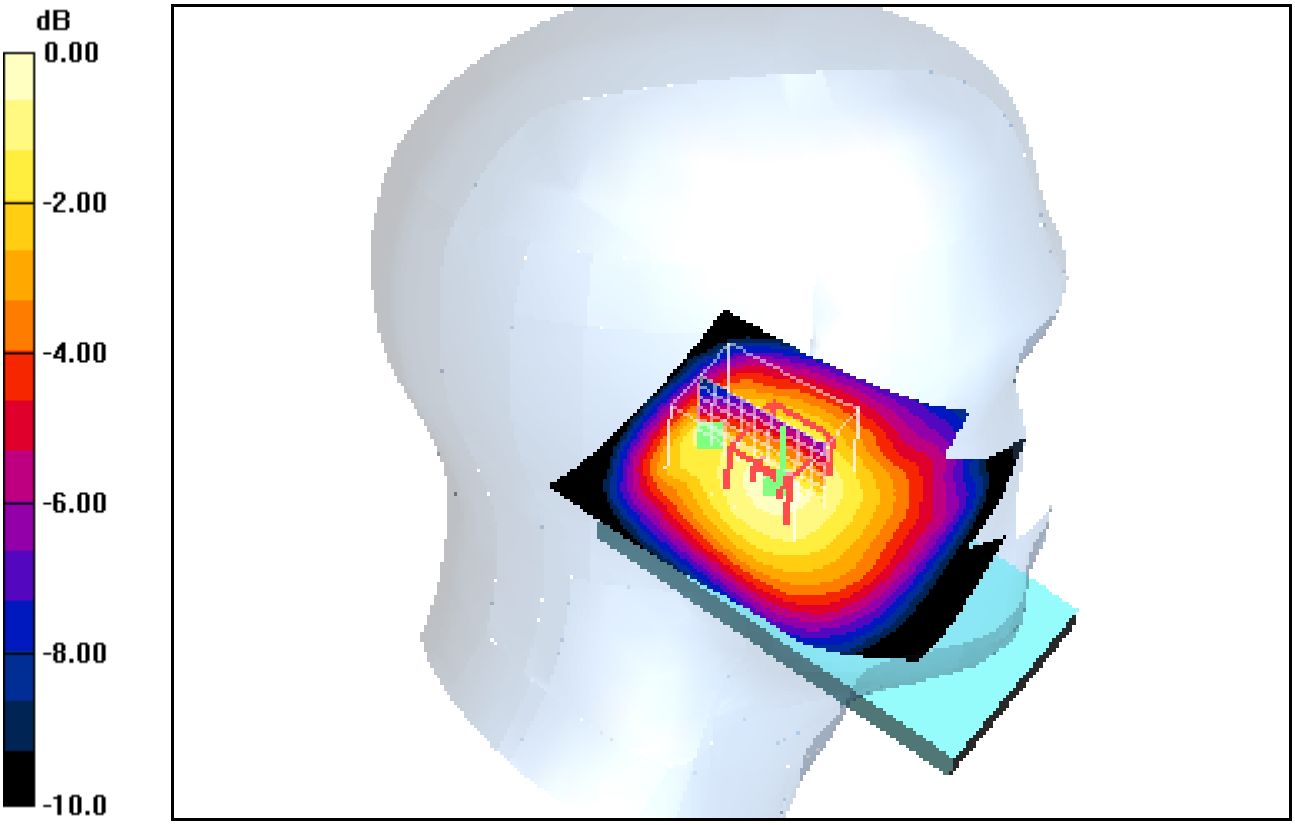

0 dB = 0.561mW/g

Additional information:
ambient temperature: 22.4°C; liquid temperature: 21.9°C

Date/Time: 30.11.2011 17:43:34Date/Time: 30.11.2011 17:51:00

IEEE1528_OET65-RightHandSide-WCDMA FDD V

DUT: Sony Ericsson; Type: AAD-3880136-BV; Serial: CB511VCC34
Communication System: WCDMA FDD V; Frequency: 826.4 MHz; Duty Cycle: 1:1
Medium: HSL850 Medium parameters used (interpolated): f = 826.4 MHz; σ = 0.894 mho/m; ε_r = 42.5; ρ = 1000 kg/m^3
Phantom section: Right Section
DASY4 Configuration:
- Probe: ET3DV6 - SN1558; ConvF(5.95, 5.95, 5.95); Calibrated: 23.08.2011
- Sensor-Surface: 4mm (Mechanical And Optical Surface Detection)
- Electronics: DAE3 Sn413; Calibrated: 13.01.2011
- Phantom: SAM 12; Type: SAM; Serial: 1043
- Measurement SW: DASY4, V4.5 Build 19; Postprocessing SW: SEMCAD, V1.8 Build 146

Touch position - Low/Area Scan (61x91x1): Measurement grid: dx=15mm, dy=15mm

Maximum value of SAR (interpolated) = 0.753 mW/g

Touch position - Low/Zoom Scan (7x7x7) (7x7x7)/Cube 0: Measurement grid: dx=5mm, dy=5mm, dz=5mm

Reference Value = 29.4 V/m; Power Drift = -0.087 dB
Peak SAR (extrapolated) = 0.906 W/kg
SAR(1 g) = 0.723 mW/g; SAR(10 g) = 0.549 mW/g
Maximum value of SAR (measured) = 0.754 mW/g

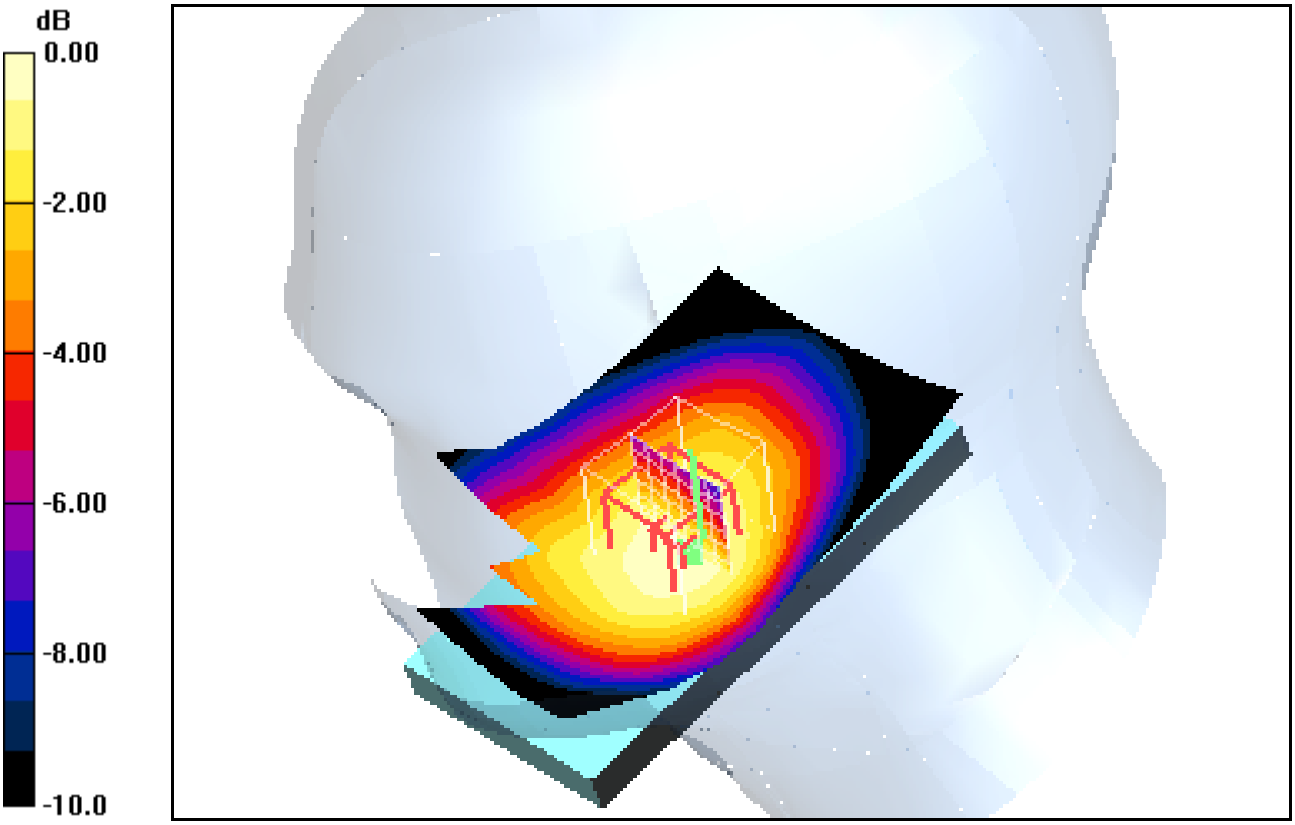

0 dB = 0.754mW/g

Additional information:
ambient temperature: 23.3°C; liquid temperature: 22.4°C

Date/Time: 30.11.2011 18:08:54Date/Time: 30.11.2011 18:15:56

IEEE1528_OET65-RightHandSide-WCDMA FDD V

DUT: Sony Ericsson; Type: AAD-3880136-BV; Serial: CB511VCC34

Communication System: WCDMA FDD V; Frequency: 836.4 MHz; Duty Cycle: 1:1
Medium: HSL850 Medium parameters used (interpolated): f = 836.4 MHz; σ = 0.91 mho/m; ε_r = 42.4; ρ = 1000 kg/m^3
Phantom section: Right Section
DASY4 Configuration:
- Probe: ET3DV6 - SN1558; ConvF(5.95, 5.95, 5.95); Calibrated: 23.08.2011
- Sensor-Surface: 4mm (Mechanical And Optical Surface Detection)
- Electronics: DAE3 Sn413; Calibrated: 13.01.2011
- Phantom: SAM 12; Type: SAM; Serial: 1043
- Measurement SW: DASY4, V4.5 Build 19; Postprocessing SW: SEMCAD, V1.8 Build 146

Touch position - Middle/Area Scan (61x91x1): Measurement grid: dx=15mm, dy=15mm

Maximum value of SAR (interpolated) = 0.713 mW/g

Touch position - Middle/Zoom Scan (7x7x7) (7x7x7)/Cube 0: Measurement grid: dx=5mm, dy=5mm, dz=5mm

Reference Value = 28.2 V/m; Power Drift = 0.00 dB
Peak SAR (extrapolated) = 0.876 W/kg
SAR(1 g) = 0.681 mW/g; SAR(10 g) = 0.517 mW/g
Maximum value of SAR (measured) = 0.712 mW/g

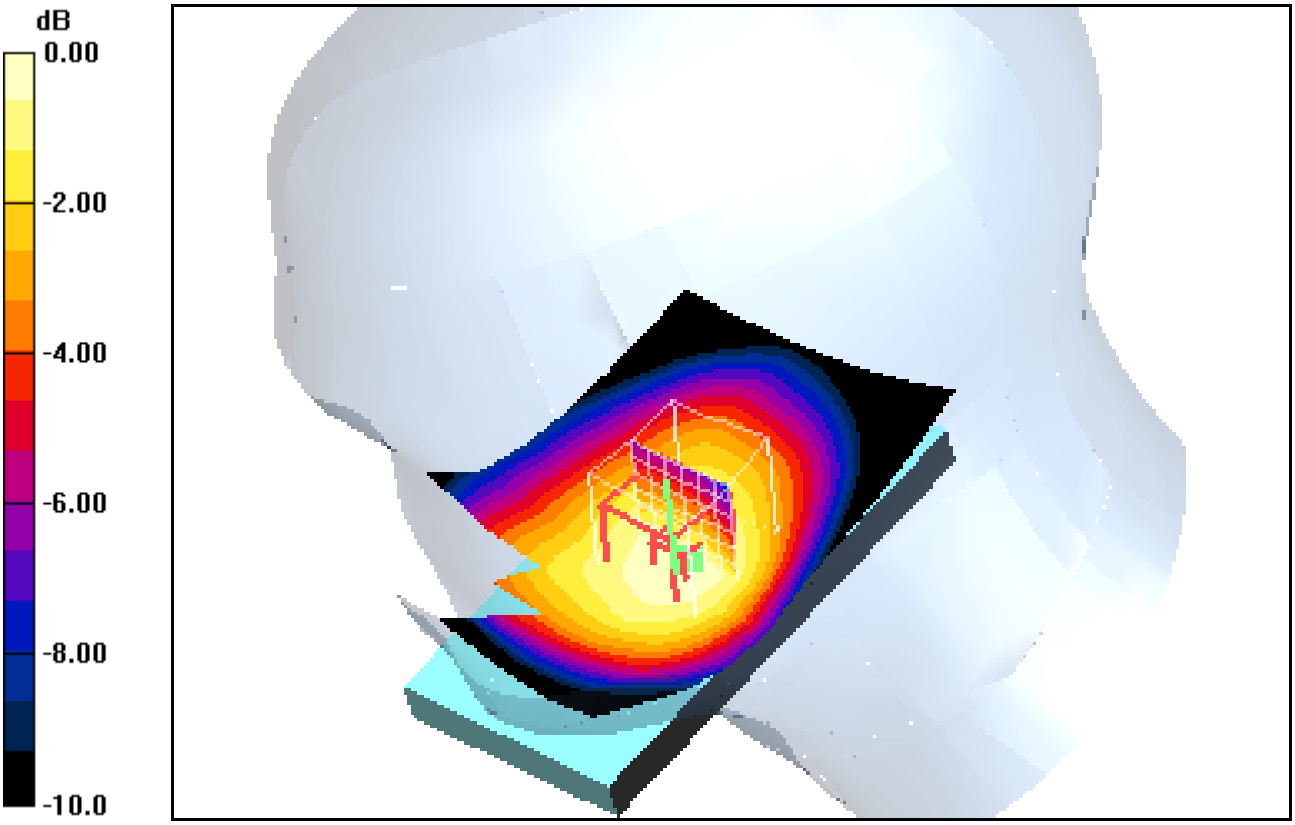

0 dB = 0.712mW/g

Additional information:
ambient temperature: 23.3°C; liquid temperature: 22.4°C

Date/Time: 30.11.2011 18:38:18Date/Time: 30.11.2011 18:45:21

IEEE1528_OET65-RightHandSide-WCDMA FDD V

DUT: Sony Ericsson; Type: AAD-3880136-BV; Serial: CB511VCC34

Communication System: WCDMA FDD V; Frequency: 846.6 MHz; Duty Cycle: 1:1
Medium: HSL850 Medium parameters used (interpolated): f = 846.6 MHz; σ = 0.918 mho/m; ε_r = 42.2; ρ = 1000 kg/m^3
Phantom section: Right Section
DASY4 Configuration:
- Probe: ET3DV6 - SN1558; ConvF(5.95, 5.95, 5.95); Calibrated: 23.08.2011
- Sensor-Surface: 4mm (Mechanical And Optical Surface Detection)
- Electronics: DAE3 Sn413; Calibrated: 13.01.2011
- Phantom: SAM 12; Type: SAM; Serial: 1043
- Measurement SW: DASY4, V4.5 Build 19; Postprocessing SW: SEMCAD, V1.8 Build 146

Touch position - High/Area Scan (61x91x1): Measurement grid: dx=15mm, dy=15mm

Maximum value of SAR (interpolated) = 0.865 mW/g

Touch position - High/Zoom Scan (7x7x7) (7x7x7)/Cube 0: Measurement grid: dx=5mm, dy=5mm, dz=5mm

Reference Value = 30.7 V/m; Power Drift = -0.00 dB
Peak SAR (extrapolated) = 1.01 W/kg
SAR(1 g) = 0.810 mW/g; SAR(10 g) = 0.617 mW/g
Maximum value of SAR (measured) = 0.850 mW/g

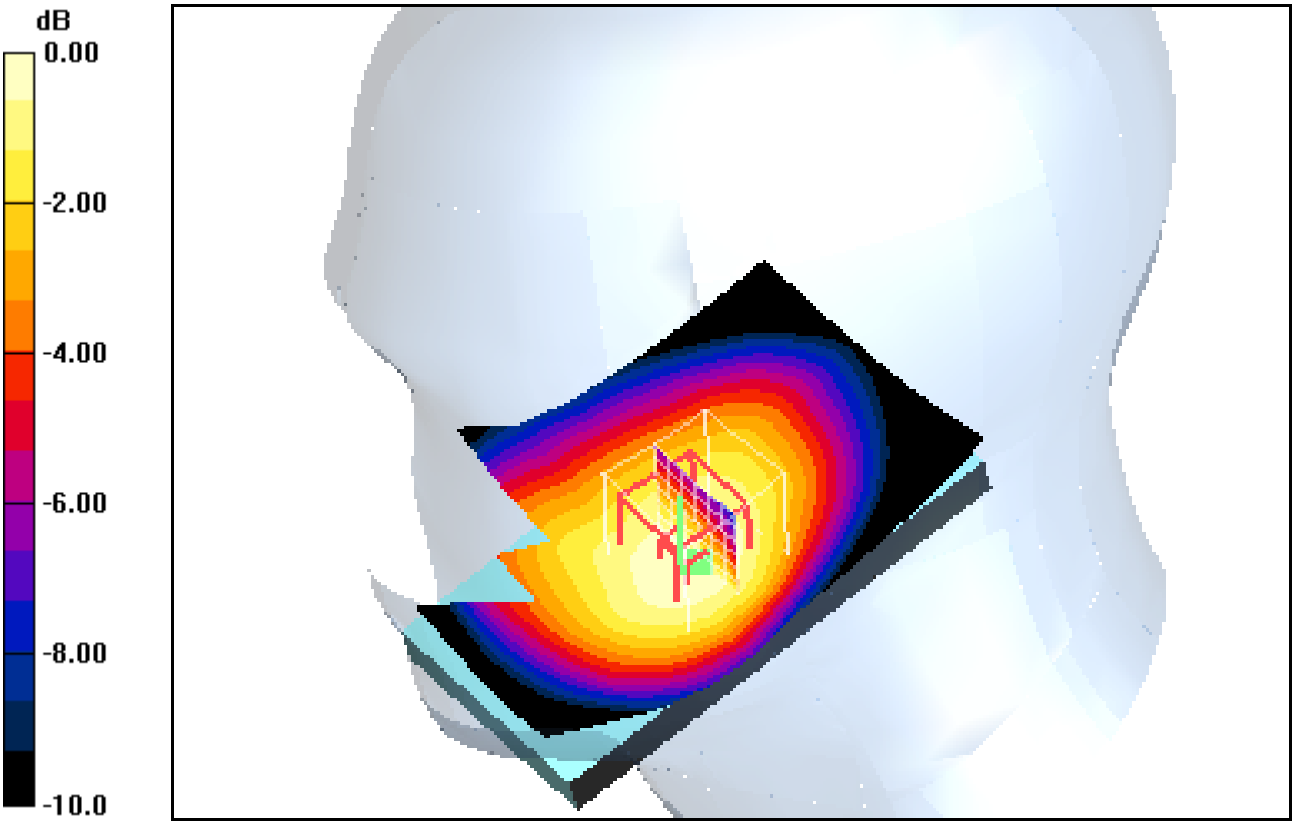

0 dB = 0.850mW/g

Additional information:
ambient temperature: 23.3°C; liquid temperature: 22.4°C

Date/Time: 01.12.2011 09:09:03Date/Time: 01.12.2011 09:17:18

IEEE1528_OET65-RightHandSide-WCDMA FDD V

DUT: Sony Ericsson; Type: AAD-3880136-BV; Serial: CB511VCC34
Communication System: WCDMA FDD V; Frequency: 826.4 MHz; Duty Cycle: 1:1
Medium: HSL850 Medium parameters used (interpolated): f = 826.4 MHz; σ = 0.894 mho/m; ε_r = 42.5; ρ = 1000 kg/m^3
Phantom section: Right Section
DASY4 Configuration:
- Probe: ET3DV6 - SN1558; ConvF(5.95, 5.95, 5.95); Calibrated: 23.08.2011
- Sensor-Surface: 4mm (Mechanical And Optical Surface Detection)
- Electronics: DAE3 Sn413; Calibrated: 13.01.2011
- Phantom: SAM 12; Type: SAM; Serial: 1043
- Measurement SW: DASY4, V4.5 Build 19; Postprocessing SW: SEMCAD, V1.8 Build 146

Tilt position - Low/Area Scan (61x91x1): Measurement grid: dx=15mm, dy=15mm

Maximum value of SAR (interpolated) = 0.393 mW/g

Tilt position - Low/Zoom Scan (7x7x7) (7x11x7)/Cube 0: Measurement grid: dx=5mm, dy=5mm, dz=5mm

Reference Value = 21.7 V/m; Power Drift = 0.054 dB
Peak SAR (extrapolated) = 0.466 W/kg
SAR(1 g) = 0.386 mW/g; SAR(10 g) = 0.295 mW/g
Maximum value of SAR (measured) = 0.402 mW/g

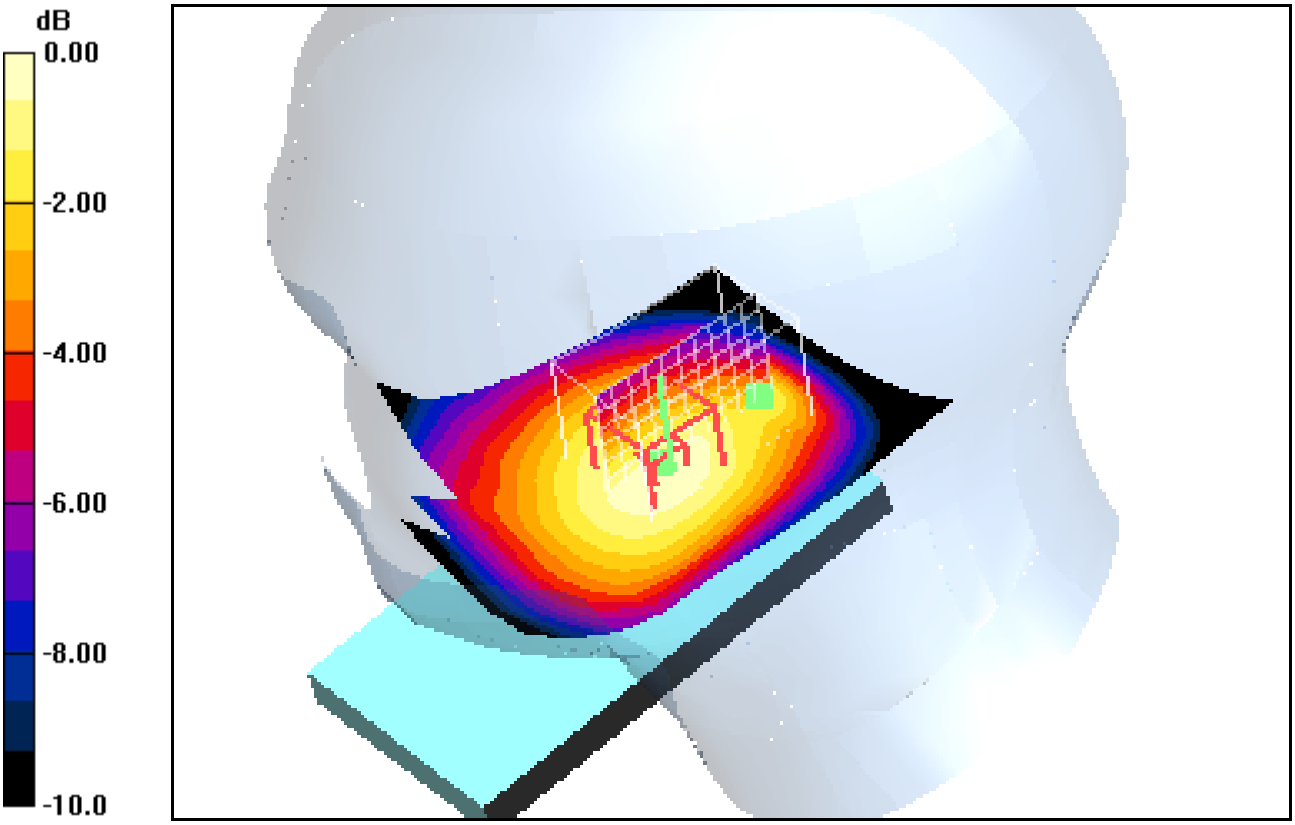

0 dB = 0.402mW/g

Additional information:
ambient temperature: 23.3°C; liquid temperature: 22.4°C

Date/Time: 01.12.2011 08:35:16Date/Time: 01.12.2011 08:50:52

IEEE1528_OET65-RightHandSide-WCDMA FDD V

DUT: Sony Ericsson; Type: AAD-3880136-BV; Serial: CB511VCC34

Communication System: WCDMA FDD V; Frequency: 836.4 MHz; Duty Cycle: 1:1
Medium: HSL850 Medium parameters used (interpolated): f = 836.4 MHz; σ = 0.91 mho/m; ε_r = 42.4; ρ = 1000 kg/m^3
Phantom section: Right Section
DASY4 Configuration:
- Probe: ET3DV6 - SN1558; ConvF(5.95, 5.95, 5.95); Calibrated: 23.08.2011
- Sensor-Surface: 4mm (Mechanical And Optical Surface Detection)
- Electronics: DAE3 Sn413; Calibrated: 13.01.2011
- Phantom: SAM 12; Type: SAM; Serial: 1043
- Measurement SW: DASY4, V4.5 Build 19; Postprocessing SW: SEMCAD, V1.8 Build 146

Tilt position - Middle/Area Scan (61x91x1): Measurement grid: dx=15mm, dy=15mm

Maximum value of SAR (interpolated) = 0.407 mW/g

Tilt position - Middle/Zoom Scan (7x7x7) (7x10x7)/Cube 0: Measurement grid: dx=5mm, dy=5mm, dz=5mm

Reference Value = 21.6 V/m; Power Drift = -0.077 dB
Peak SAR (extrapolated) = 0.473 W/kg
SAR(1 g) = 0.386 mW/g; SAR(10 g) = 0.293 mW/g
Maximum value of SAR (measured) = 0.405 mW/g

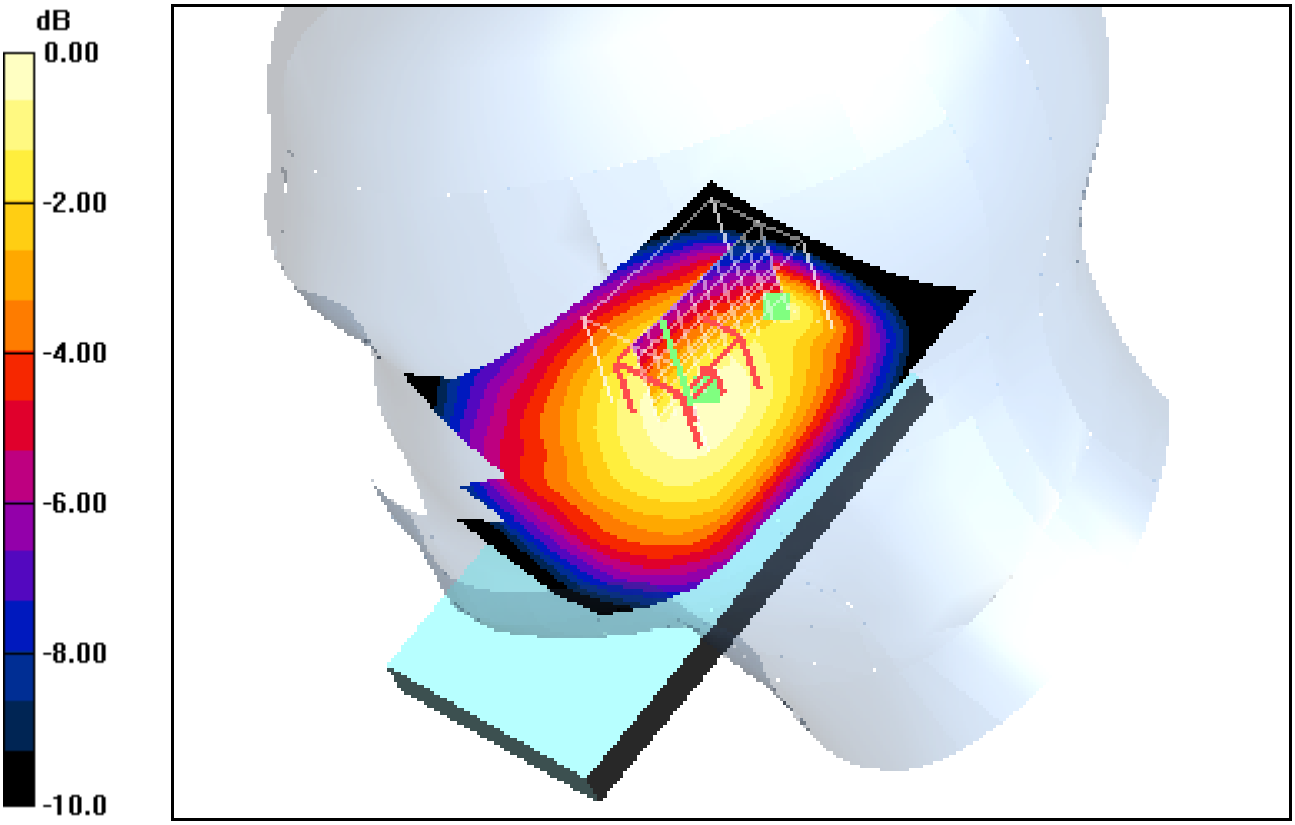

0 dB = 0.405mW/g

Additional information:
ambient temperature: 23.3°C; liquid temperature: 22.4°C

Date/Time: 30.11.2011 19:01:47Date/Time: 30.11.2011 19:09:06Date/Time: 30.11.2011 19:20:40

IEEE1528_OET65-RightHandSide-WCDMA FDD V

DUT: Sony Ericsson; Type: AAD-3880136-BV; Serial: CB511VCC34
Communication System: WCDMA FDD V; Frequency: 846.6 MHz; Duty Cycle: 1:1
Medium: HSL850 Medium parameters used (interpolated): f = 846.6 MHz; σ = 0.918 mho/m; ε_r = 42.2; ρ = 1000 kg/m^3
Phantom section: Right Section
DASY4 Configuration:
- Probe: ET3DV6 - SN1558; ConvF(5.95, 5.95, 5.95); Calibrated: 23.08.2011
- Sensor-Surface: 4mm (Mechanical And Optical Surface Detection)
- Electronics: DAE3 Sn413; Calibrated: 13.01.2011
- Phantom: SAM 12; Type: SAM; Serial: 1043
- Measurement SW: DASY4, V4.5 Build 19; Postprocessing SW: SEMCAD, V1.8 Build 146

Tilt position - High/Area Scan (61x91x1): Measurement grid: dx=15mm, dy=15mm
Maximum value of SAR (interpolated) = 0.548 mW/g

Tilt position - High/Zoom Scan (7x7x7) (7x7x7)/Cube 0: Measurement grid: dx=5mm, dy=5mm, dz=5mm
Reference Value = 25.5 V/m; Power Drift = 0.113 dB
Peak SAR (extrapolated) = 0.643 W/kg
SAR(1 g) = 0.535 mW/g; SAR(10 g) = 0.407 mW/g
Maximum value of SAR (measured) = 0.565 mW/g

Tilt position - High/Zoom Scan (7x7x7) (7x7x7)/Cube 1: Measurement grid: dx=5mm, dy=5mm, dz=5mm
Reference Value = 25.5 V/m; Power Drift = 0.113 dB
Peak SAR (extrapolated) = 0.573 W/kg
SAR(1 g) = 0.385 mW/g; SAR(10 g) = 0.256 mW/g
Maximum value of SAR (measured) = 0.456 mW/g

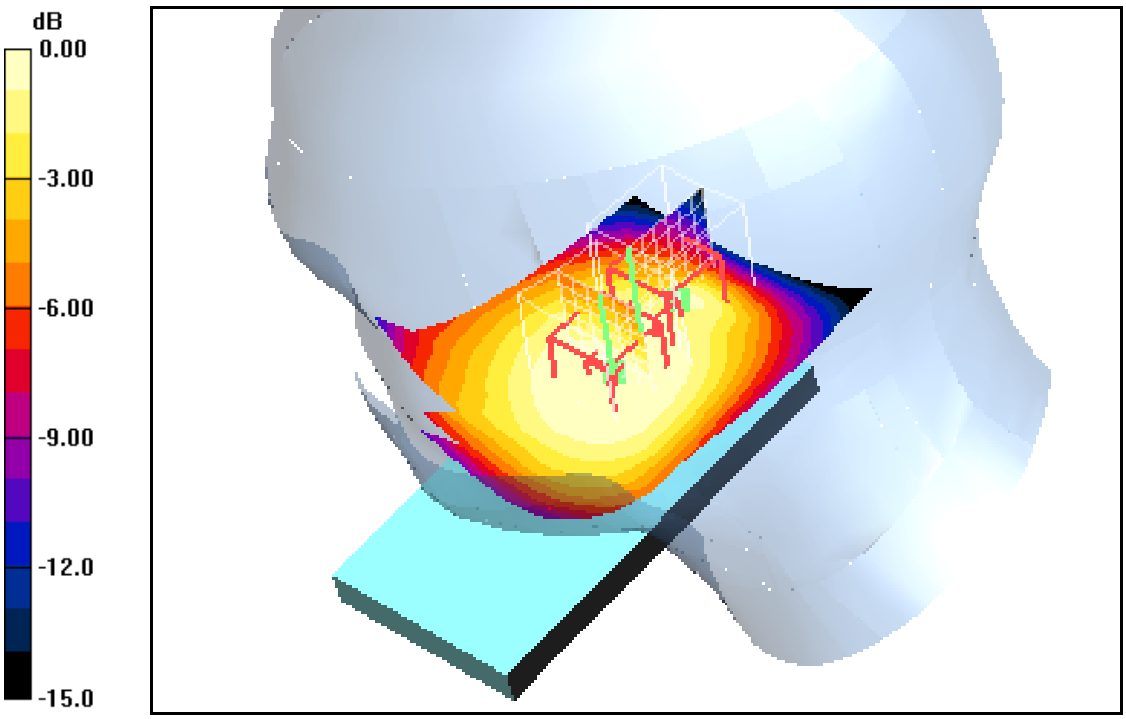

0 dB = 0.456mW/g

Additional information:
ambient temperature: 23.3°C; liquid temperature: 22.4°C

Annex B.6: WCDMA FDD V 835MHz body

Date/Time: 04.12.2011 10:22:32Date/Time: 04.12.2011 10:30:45

IEEE1528_OET65-Body-WCDMA FDD V

DUT: Sony Ericsson; Type: AAD-3880136-BV; Serial: CB511VCC34
Communication System: WCDMA FDD V; Frequency: 826.4 MHz; Duty Cycle: 1:1
Medium: M850 Medium parameters used (interpolated): f = 826.4 MHz; σ = 0.992 mho/m; ε_r = 55.2; ρ = 1000 kg/m^3
Phantom section: Flat Section
DASY4 Configuration:
- Probe: ET3DV6 - SN1558; ConvF(5.85, 5.85, 5.85); Calibrated: 23.08.2011
- Sensor-Surface: 4mm (Mechanical And Optical Surface Detection)
- Electronics: DAE3 Sn413; Calibrated: 13.01.2011
- Phantom: SAM 12; Type: SAM; Serial: 1043
- Measurement SW: DASY4, V4.5 Build 19; Postprocessing SW: SEMCAD, V1.8 Build 146

Front position - Low/Area Scan (51x101x1): Measurement grid: dx=15mm, dy=15mm

Maximum value of SAR (interpolated) = 1.02 mW/g

Front position - Low/Zoom Scan (7x7x7) (7x7x7)/Cube 0: Measurement grid: dx=5mm, dy=5mm, dz=5mm

Reference Value = 33.1 V/m; Power Drift = -0.021 dB
Peak SAR (extrapolated) = 1.18 W/kg
SAR(1 g) = 0.973 mW/g; SAR(10 g) = 0.757 mW/g
Maximum value of SAR (measured) = 1.03 mW/g

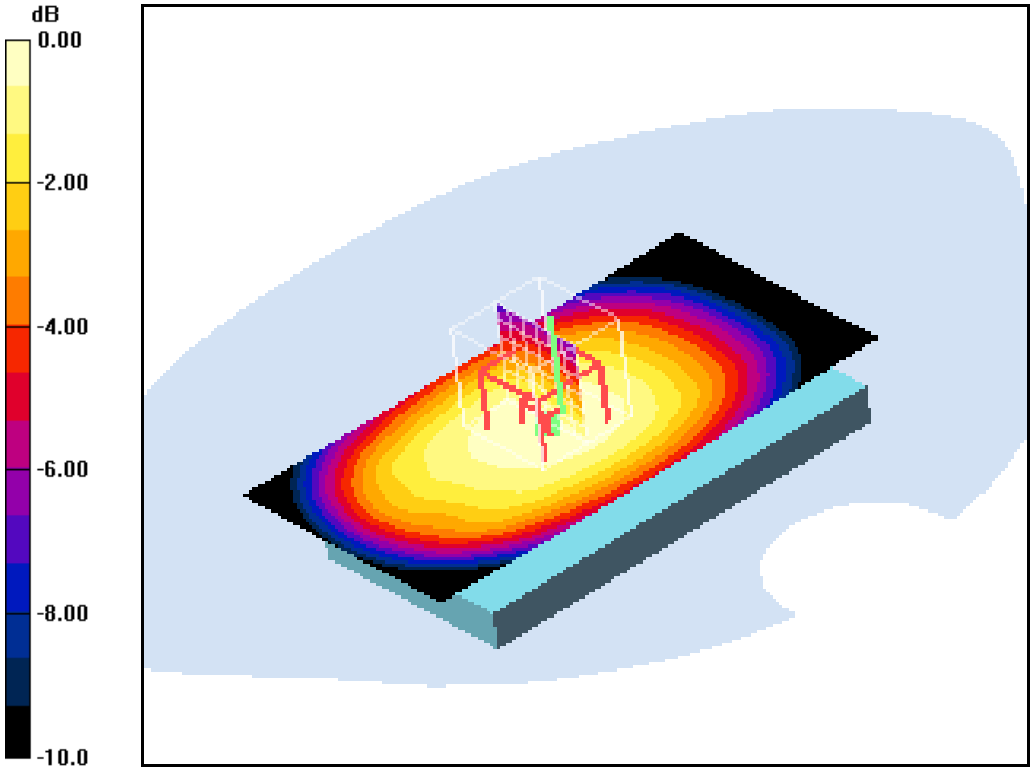

0 dB = 1.03mW/g

Additional information:
position or distance of DUT to SAM: 10 mm
ambient temperature: 23.7°C; liquid temperature: 22.9°C

Date/Time: 03.12.2011 21:58:18Date/Time: 03.12.2011 22:06:20

IEEE1528_OET65-Body-WCDMA FDD V

DUT: Sony Ericsson; Type: AAD-3880136-BV; Serial: CB511VCC34
Communication System: WCDMA FDD V; Frequency: 836.4 MHz; Duty Cycle: 1:1
Medium: M850 Medium parameters used (interpolated): f = 836.4 MHz; σ = 1 mho/m; ε_r = 55.1; ρ = 1000 kg/m^3
Phantom section: Flat Section
DASY4 Configuration:
- Probe: ET3DV6 - SN1558; ConvF(5.85, 5.85, 5.85); Calibrated: 23.08.2011
- Sensor-Surface: 4mm (Mechanical And Optical Surface Detection)
- Electronics: DAE3 Sn413; Calibrated: 13.01.2011
- Phantom: SAM 12; Type: SAM; Serial: 1043
- Measurement SW: DASY4, V4.5 Build 19; Postprocessing SW: SEMCAD, V1.8 Build 146

Front position - Middle/Area Scan (51x101x1): Measurement grid: dx=15mm, dy=15mm

Maximum value of SAR (interpolated) = 0.955 mW/g

Front position - Middle/Zoom Scan (7x7x7) (7x7x7)/Cube 0: Measurement grid: dx=5mm, dy=5mm, dz=5mm

Reference Value = 32.0 V/m; Power Drift = -0.00 dB
Peak SAR (extrapolated) = 1.09 W/kg
SAR(1 g) = 0.914 mW/g; SAR(10 g) = 0.707 mW/g
Maximum value of SAR (measured) = 0.959 mW/g

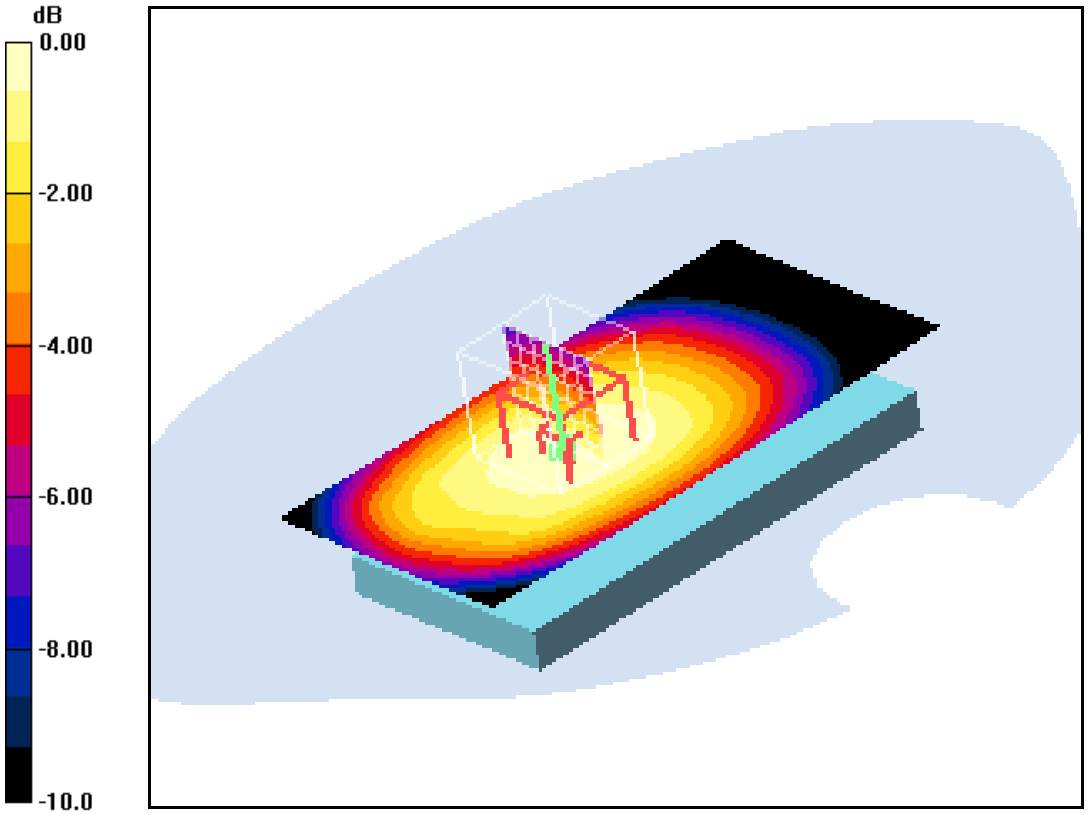

0 dB = 0.959mW/g

Additional information:
position or distance of DUT to SAM: 10 mm
ambient temperature: 23.7°C; liquid temperature: 22.9°C

Date/Time: 03.12.2011 21:29:01Date/Time: 03.12.2011 21:38:16

IEEE1528_OET65-Body-WCDMA FDD V

DUT: Sony Ericsson; Type: AAD-3880136-BV; Serial: CB511VCC34
Communication System: WCDMA FDD V; Frequency: 846.6 MHz; Duty Cycle: 1:1
Medium: M850 Medium parameters used (interpolated): f = 846.6 MHz; σ = 1.02 mho/m; ε_r = 55; ρ = 1000 kg/m^3
Phantom section: Flat Section
DASY4 Configuration:
- Probe: ET3DV6 - SN1558; ConvF(5.85, 5.85, 5.85); Calibrated: 23.08.2011
- Sensor-Surface: 4mm (Mechanical And Optical Surface Detection)
- Electronics: DAE3 Sn413; Calibrated: 13.01.2011
- Phantom: SAM 12; Type: SAM; Serial: 1043
- Measurement SW: DASY4, V4.5 Build 19; Postprocessing SW: SEMCAD, V1.8 Build 146

Front position - High/Area Scan (51x101x1): Measurement grid: dx=15mm, dy=15mm

Maximum value of SAR (interpolated) = 1.03 mW/g

Front position - High/Zoom Scan (7x7x7) (7x7x7)/Cube 0: Measurement grid: dx=5mm, dy=5mm, dz=5mm

Reference Value = 32.8 V/m; Power Drift = 0.043 dB
Peak SAR (extrapolated) = 1.18 W/kg
SAR(1 g) = 0.989 mW/g; SAR(10 g) = 0.764 mW/g
Maximum value of SAR (measured) = 1.04 mW/g

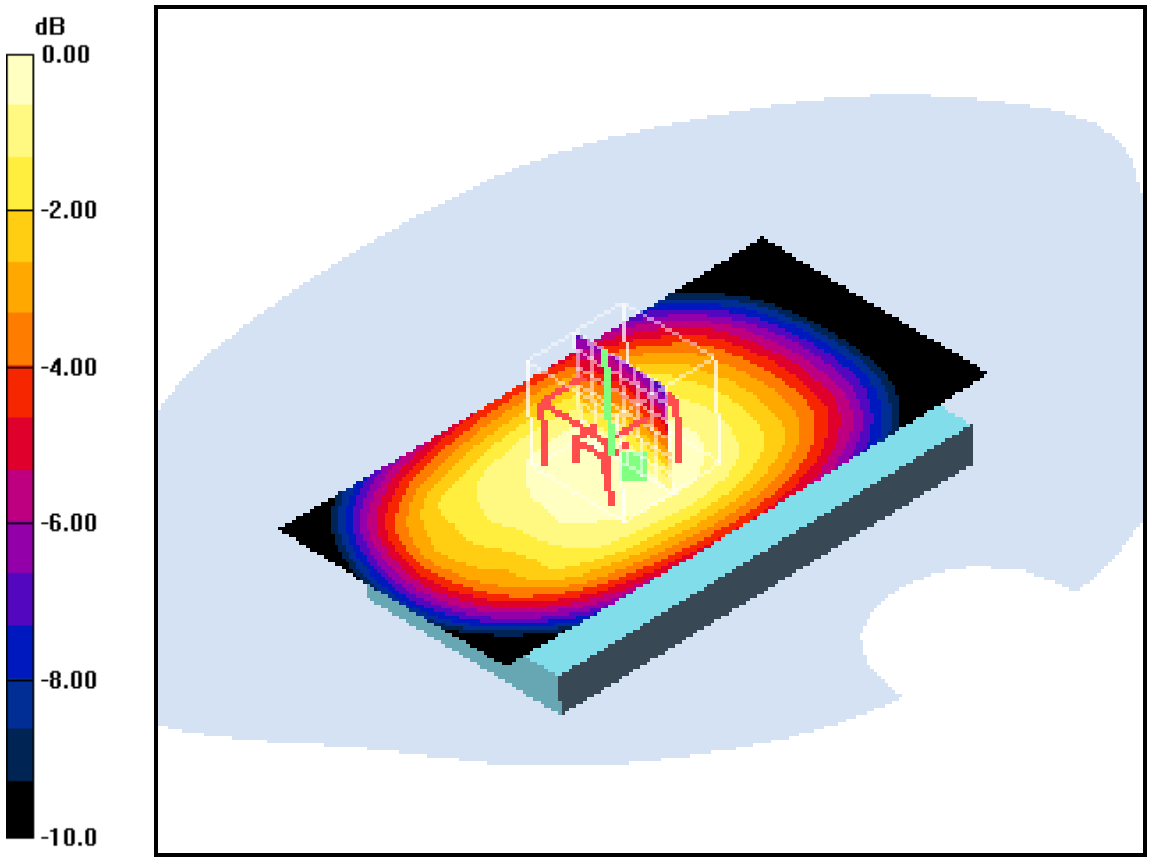

0 dB = 1.04mW/g

Additional information:
position or distance of DUT to SAM: 10 mm
ambient temperature: 23.7°C; liquid temperature: 22.9°C

Date/Time: 03.12.2011 20:16:00Date/Time: 03.12.2011 20:24:04

IEEE1528_OET65-Body-WCDMA FDD V

DUT: Sony Ericsson; Type: AAD-3880136-BV; Serial: CB511VCC34
Communication System: WCDMA FDD V; Frequency: 826.4 MHz; Duty Cycle: 1:1
Medium: M850 Medium parameters used (interpolated): f = 826.4 MHz; σ = 0.992 mho/m; ε_r = 55.2; ρ = 1000 kg/m^3
Phantom section: Flat Section
DASY4 Configuration:
- Probe: ET3DV6 - SN1558; ConvF(5.85, 5.85, 5.85); Calibrated: 23.08.2011
- Sensor-Surface: 4mm (Mechanical And Optical Surface Detection)
- Electronics: DAE3 Sn413; Calibrated: 13.01.2011
- Phantom: SAM 12; Type: SAM; Serial: 1043
- Measurement SW: DASY4, V4.5 Build 19; Postprocessing SW: SEMCAD, V1.8 Build 146

Rear position - Low/Area Scan (51x101x1): Measurement grid: dx=15mm, dy=15mm

Maximum value of SAR (interpolated) = 1.04 mW/g

Rear position - Low/Zoom Scan (7x7x7) (7x7x7)/Cube 0: Measurement grid: dx=5mm, dy=5mm, dz=5mm

Reference Value = 33.5 V/m; Power Drift = 0.01 dB
Peak SAR (extrapolated) = 1.21 W/kg
SAR(1 g) = 0.986 mW/g; SAR(10 g) = 0.753 mW/g
Maximum value of SAR (measured) = 1.04 mW/g

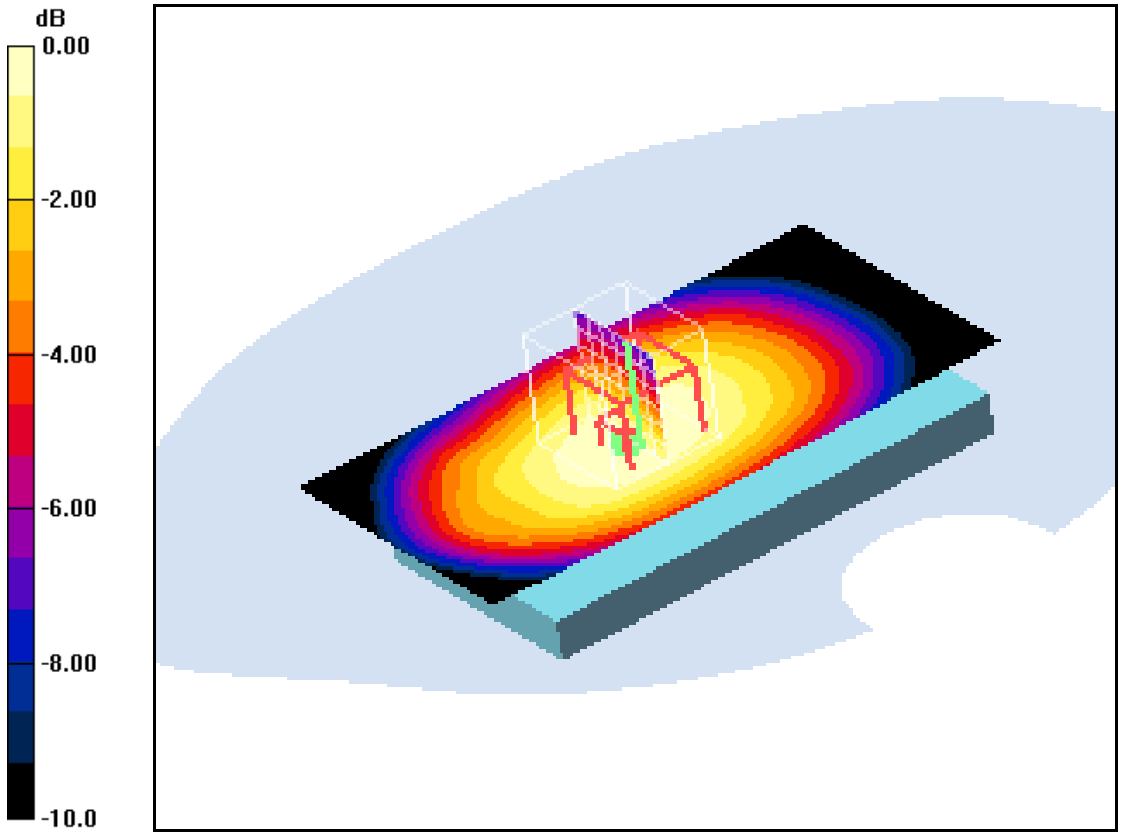

0 dB = 1.04mW/g

Additional information:
position or distance of DUT to SAM: 10 mm
ambient temperature: 23.7°C; liquid temperature: 22.9°C

Date/Time: 03.12.2011 20:38:08Date/Time: 03.12.2011 20:45:49

IEEE1528_OET65-Body-WCDMA FDD V

DUT: Sony Ericsson; Type: AAD-3880136-BV; Serial: CB511VCC34
Communication System: WCDMA FDD V; Frequency: 836.4 MHz; Duty Cycle: 1:1
Medium: M850 Medium parameters used (interpolated): f = 836.4 MHz; σ = 1 mho/m; ε_r = 55.1; ρ = 1000 kg/m^3
Phantom section: Flat Section
DASY4 Configuration:
- Probe: ET3DV6 - SN1558; ConvF(5.85, 5.85, 5.85); Calibrated: 23.08.2011
- Sensor-Surface: 4mm (Mechanical And Optical Surface Detection)
- Electronics: DAE3 Sn413; Calibrated: 13.01.2011
- Phantom: SAM 12; Type: SAM; Serial: 1043
- Measurement SW: DASY4, V4.5 Build 19; Postprocessing SW: SEMCAD, V1.8 Build 146

Rear position - Middle/Area Scan (51x101x1): Measurement grid: dx=15mm, dy=15mm

Maximum value of SAR (interpolated) = 1.03 mW/g

Rear position - Middle/Zoom Scan (7x7x7) (7x7x7)/Cube 0: Measurement grid: dx=5mm, dy=5mm, dz=5mm

Reference Value = 33.3 V/m; Power Drift = -0.01 dB
Peak SAR (extrapolated) = 1.20 W/kg
SAR(1 g) = 0.986 mW/g; SAR(10 g) = 0.752 mW/g
Maximum value of SAR (measured) = 1.04 mW/g

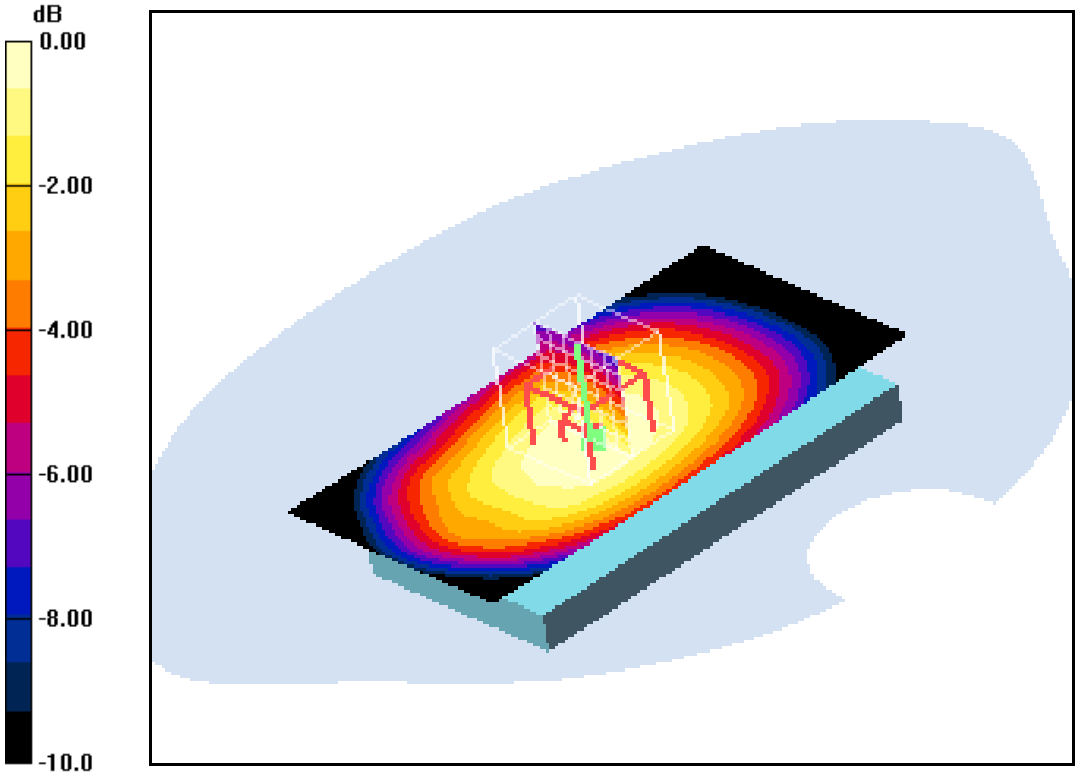

0 dB = 1.04mW/g

Additional information:
position or distance of DUT to SAM: 10 mm
ambient temperature: 23.7°C; liquid temperature: 22.9°C

Date/Time: 03.12.2011 21:02:26Date/Time: 03.12.2011 21:12:01

IEEE1528_OET65-Body-WCDMA FDD V

DUT: Sony Ericsson; Type: AAD-3880136-BV; Serial: CB511VCC34
Communication System: WCDMA FDD V; Frequency: 846.6 MHz; Duty Cycle: 1:1
Medium: M850 Medium parameters used (interpolated): f = 846.6 MHz; σ = 1.02 mho/m; ε_r = 55; ρ = 1000 kg/m^3
Phantom section: Flat Section
DASY4 Configuration:
- Probe: ET3DV6 - SN1558; ConvF(5.85, 5.85, 5.85); Calibrated: 23.08.2011
- Sensor-Surface: 4mm (Mechanical And Optical Surface Detection)
- Electronics: DAE3 Sn413; Calibrated: 13.01.2011
- Phantom: SAM 12; Type: SAM; Serial: 1043
- Measurement SW: DASY4, V4.5 Build 19; Postprocessing SW: SEMCAD, V1.8 Build 146

Rear position - High/Area Scan (51x101x1): Measurement grid: dx=15mm, dy=15mm

Maximum value of SAR (interpolated) = 1.16 mW/g

Rear position - High/Zoom Scan (7x7x7) (7x7x7)/Cube 0: Measurement grid: dx=5mm, dy=5mm, dz=5mm

Reference Value = 34.9 V/m; Power Drift = -0.00 dB
Peak SAR (extrapolated) = 1.33 W/kg
SAR(1 g) = 1.1 mW/g; SAR(10 g) = 0.837 mW/g
Maximum value of SAR (measured) = 1.15 mW/g

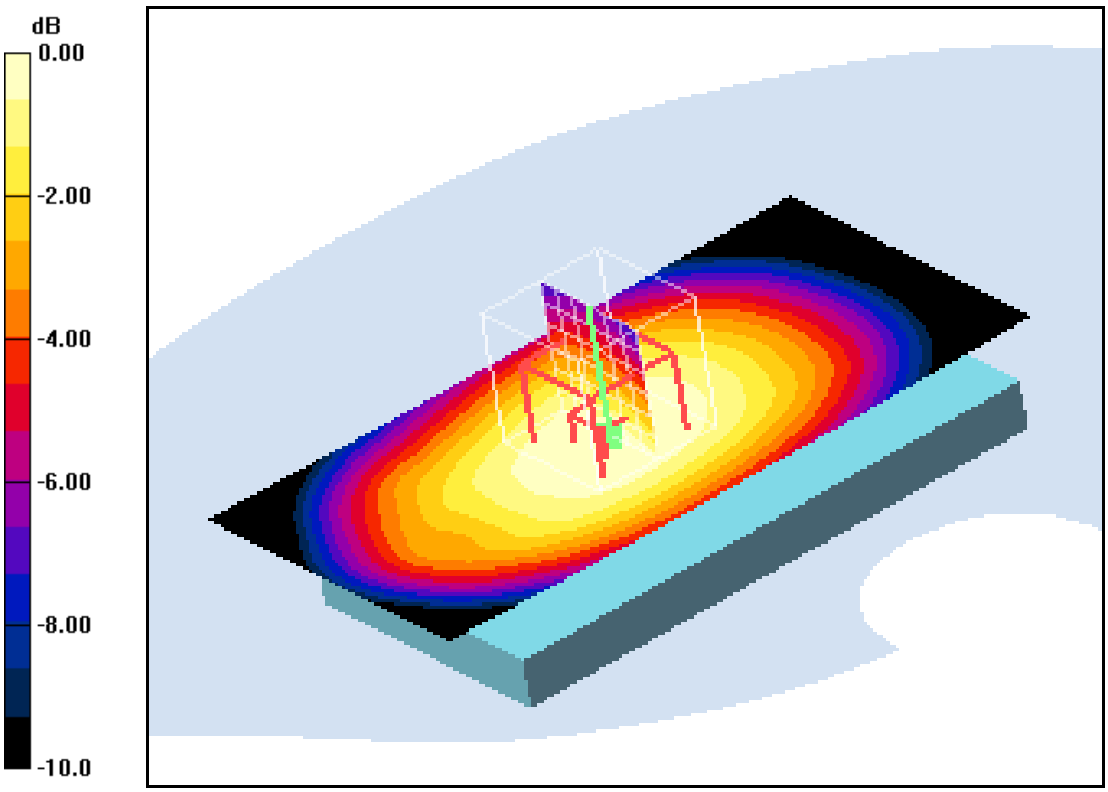

0 dB = 1.15mW/g

Additional information:
position or distance of DUT to SAM: 10 mm
ambient temperature: 23.7°C; liquid temperature: 22.9°C

Date/Time: 04.12.2011 14:49:57Date/Time: 04.12.2011 14:56:50

IEEE1528_OET65-Body-WCDMA FDD V

DUT: Sony Ericsson; Type: AAD-3880136-BV; Serial: CB511VCC34
Communication System: WCDMA FDD V; Frequency: 826.4 MHz; Duty Cycle: 1:1
Medium: M850 Medium parameters used (interpolated): f = 826.4 MHz; σ = 0.992 mho/m; ε_r = 55.2; ρ = 1000 kg/m^3
Phantom section: Flat Section
DASY4 Configuration:
- Probe: ET3DV6 - SN1558; ConvF(5.85, 5.85, 5.85); Calibrated: 23.08.2011
- Sensor-Surface: 4mm (Mechanical And Optical Surface Detection)
- Electronics: DAE3 Sn413; Calibrated: 13.01.2011
- Phantom: SAM 12; Type: SAM; Serial: 1043
- Measurement SW: DASY4, V4.5 Build 19; Postprocessing SW: SEMCAD, V1.8 Build 146

Edge left position - Low/Area Scan (51x91x1): Measurement grid: dx=15mm, dy=15mm

Maximum value of SAR (interpolated) = 1.02 mW/g

Edge left position - Low/Zoom Scan (7x7x7) (7x7x7)/Cube 0: Measurement grid: dx=5mm, dy=5mm, dz=5mm

Reference Value = 32.0 V/m; Power Drift = -0.018 dB
Peak SAR (extrapolated) = 1.29 W/kg
SAR(1 g) = 0.945 mW/g; SAR(10 g) = 0.658 mW/g
Maximum value of SAR (measured) = 1.01 mW/g

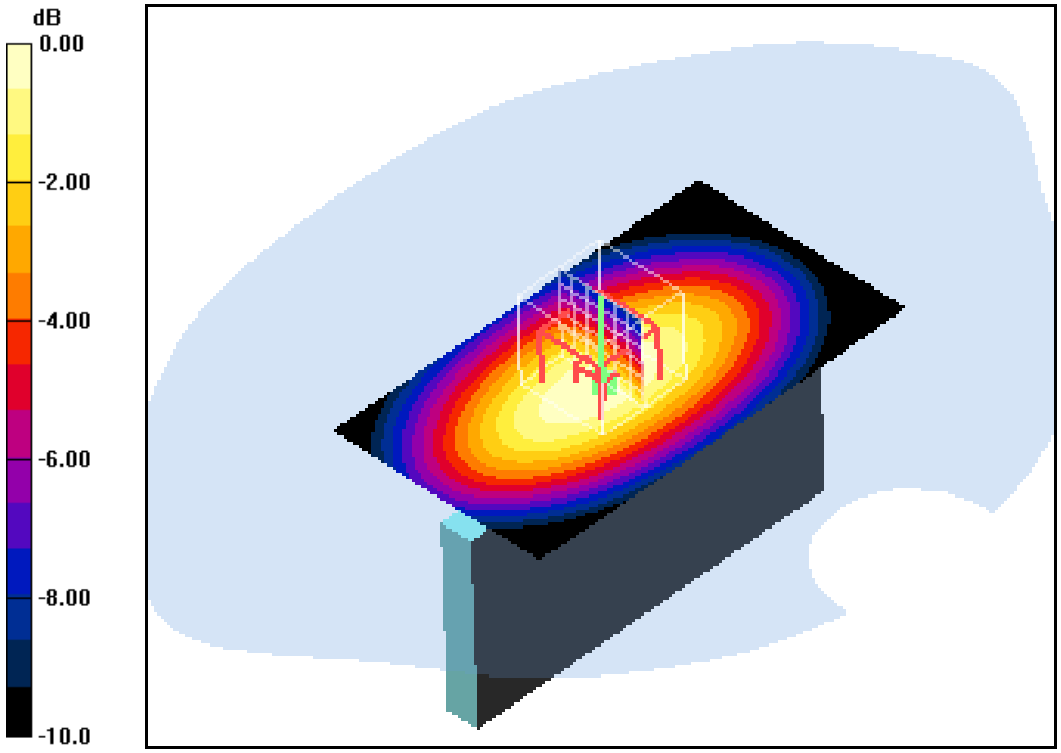

0 dB = 1.01mW/g

Additional information:
position or distance of DUT to SAM: 10 mm
ambient temperature: 23.7°C; liquid temperature: 22.9°C

Date/Time: 04.12.2011 12:28:07Date/Time: 04.12.2011 12:35:46

IEEE1528_OET65-Body-WCDMA FDD V

DUT: Sony Ericsson; Type: AAD-3880136-BV; Serial: CB511VCC34
Communication System: WCDMA FDD V; Frequency: 836.4 MHz; Duty Cycle: 1:1
Medium: M850 Medium parameters used (interpolated): f = 836.4 MHz; σ = 1 mho/m; ε_r = 55.1; ρ = 1000 kg/m^3
Phantom section: Flat Section
DASY4 Configuration:
- Probe: ET3DV6 - SN1558; ConvF(5.85, 5.85, 5.85); Calibrated: 23.08.2011
- Sensor-Surface: 4mm (Mechanical And Optical Surface Detection)
- Electronics: DAE3 Sn413; Calibrated: 13.01.2011
- Phantom: SAM 12; Type: SAM; Serial: 1043
- Measurement SW: DASY4, V4.5 Build 19; Postprocessing SW: SEMCAD, V1.8 Build 146

Edge left position - Middle/Area Scan (51x91x1): Measurement grid: dx=15mm, dy=15mm

Maximum value of SAR (interpolated) = 1.00 mW/g

Edge left position - Middle/Zoom Scan (7x7x7) (7x7x7)/Cube 0: Measurement grid: dx=5mm, dy=5mm, dz=5mm

Reference Value = 32.1 V/m; Power Drift = 0.044 dB
Peak SAR (extrapolated) = 1.26 W/kg
SAR(1 g) = 0.930 mW/g; SAR(10 g) = 0.644 mW/g
Maximum value of SAR (measured) = 0.998 mW/g

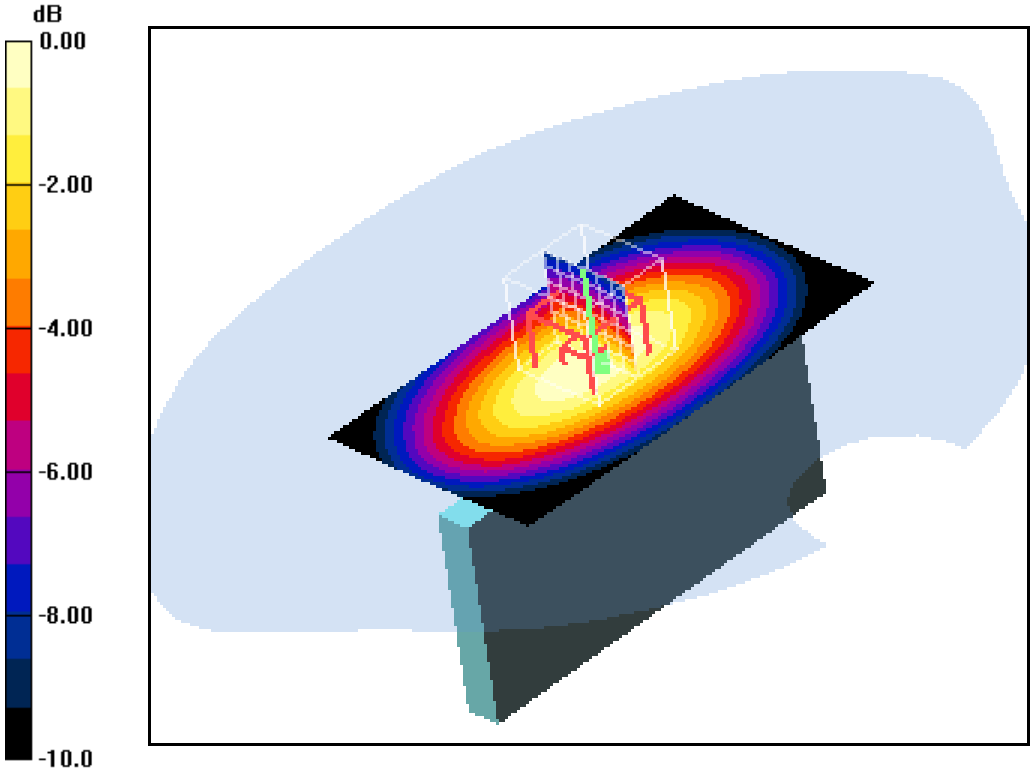

0 dB = 0.998mW/g

Additional information:
position or distance of DUT to SAM: 10 mm
ambient temperature: 23.7°C; liquid temperature: 22.9°C

Date/Time: 04.12.2011 15:11:28Date/Time: 04.12.2011 15:18:46

IEEE1528_OET65-Body-WCDMA FDD V

DUT: Sony Ericsson; Type: AAD-3880136-BV; Serial: CB511VCC34
Communication System: WCDMA FDD V; Frequency: 846.6 MHz; Duty Cycle: 1:1
Medium: M850 Medium parameters used (interpolated): f = 846.6 MHz; σ = 1.02 mho/m; ε_r = 55; ρ = 1000 kg/m^3
Phantom section: Flat Section
DASY4 Configuration:
- Probe: ET3DV6 - SN1558; ConvF(5.85, 5.85, 5.85); Calibrated: 23.08.2011
- Sensor-Surface: 4mm (Mechanical And Optical Surface Detection)
- Electronics: DAE3 Sn413; Calibrated: 13.01.2011
- Phantom: SAM 12; Type: SAM; Serial: 1043
- Measurement SW: DASY4, V4.5 Build 19; Postprocessing SW: SEMCAD, V1.8 Build 146

Edge left position - High/Area Scan (51x91x1): Measurement grid: dx=15mm, dy=15mm

Maximum value of SAR (interpolated) = 1.05 mW/g

Edge left position - High/Zoom Scan (7x7x7) (7x7x7)/Cube 0: Measurement grid: dx=5mm, dy=5mm, dz=5mm

Reference Value = 32.1 V/m; Power Drift = 0.031 dB
Peak SAR (extrapolated) = 1.35 W/kg
SAR(1 g) = 0.996 mW/g; SAR(10 g) = 0.688 mW/g
Maximum value of SAR (measured) = 1.07 mW/g

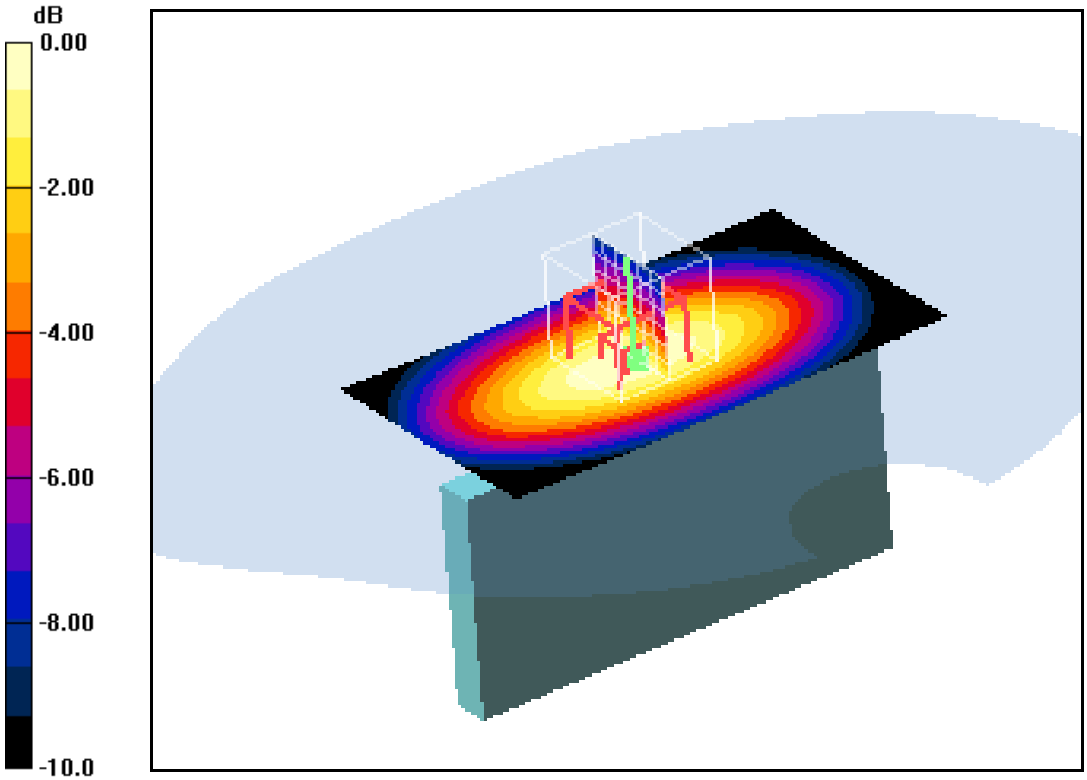

0 dB = 1.07mW/g

Additional information:
position or distance of DUT to SAM: 10 mm
ambient temperature: 23.7°C; liquid temperature: 22.9°C

Date/Time: 04.12.2011 14:28:04Date/Time: 04.12.2011 14:35:14

IEEE1528_OET65-Body-WCDMA FDD V

DUT: Sony Ericsson; Type: AAD-3880136-BV; Serial: CB511VCC34
Communication System: WCDMA FDD V; Frequency: 826.4 MHz; Duty Cycle: 1:1
Medium: M850 Medium parameters used (interpolated): f = 826.4 MHz; σ = 0.992 mho/m; ε_r = 55.2; ρ = 1000 kg/m^3
Phantom section: Flat Section
DASY4 Configuration:
- Probe: ET3DV6 - SN1558; ConvF(5.85, 5.85, 5.85); Calibrated: 23.08.2011
- Sensor-Surface: 4mm (Mechanical And Optical Surface Detection)
- Electronics: DAE3 Sn413; Calibrated: 13.01.2011
- Phantom: SAM 12; Type: SAM; Serial: 1043
- Measurement SW: DASY4, V4.5 Build 19; Postprocessing SW: SEMCAD, V1.8 Build 146

Edge right position - Low/Area Scan (51x91x1): Measurement grid: dx=15mm, dy=15mm

Maximum value of SAR (interpolated) = 0.924 mW/g

Edge right position - Low/Zoom Scan (7x7x7) (7x7x7)/Cube 0: Measurement grid: dx=5mm, dy=5mm, dz=5mm

Reference Value = 30.6 V/m; Power Drift = 0.023 dB
Peak SAR (extrapolated) = 1.15 W/kg
SAR(1 g) = 0.875 mW/g; SAR(10 g) = 0.619 mW/g
Maximum value of SAR (measured) = 0.934 mW/g

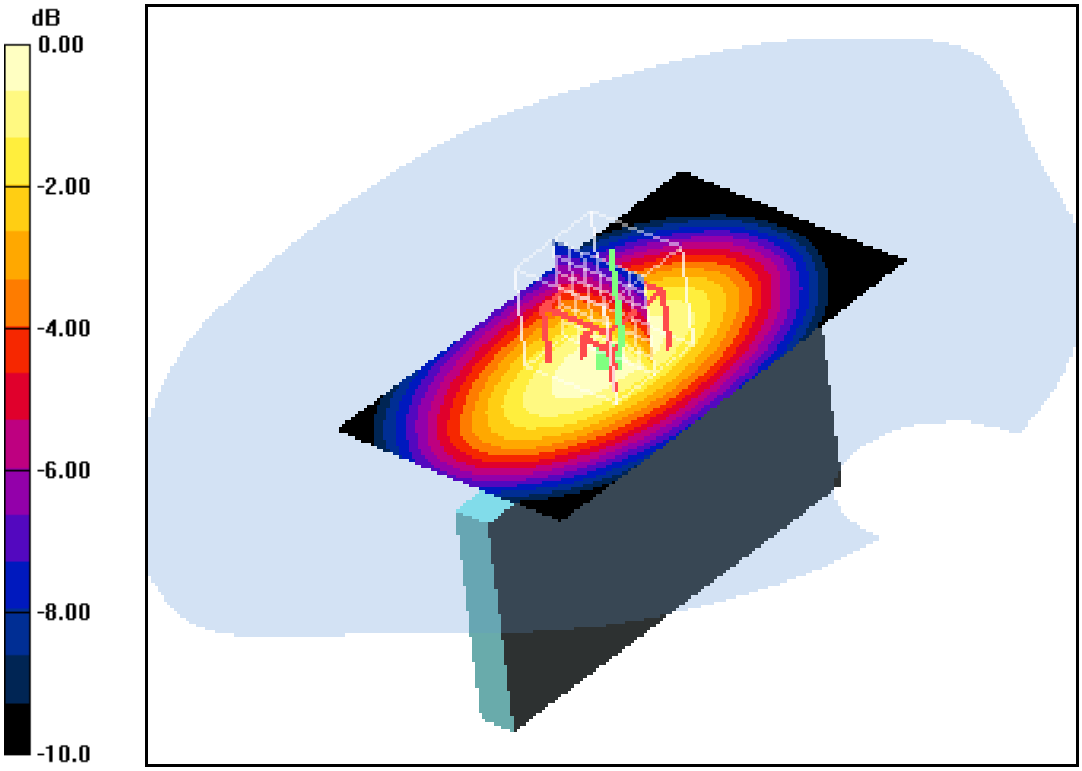

0 dB = 0.934mW/g

Additional information:
position or distance of DUT to SAM: 10 mm
ambient temperature: 23.7°C; liquid temperature: 22.9°C

Date/Time: 04.12.2011 13:00:59Date/Time: 04.12.2011 13:23:23

IEEE1528_OET65-Body-WCDMA FDD V

DUT: Sony Ericsson; Type: AAD-3880136-BV; Serial: CB511VCC34
Communication System: WCDMA FDD V; Frequency: 836.4 MHz; Duty Cycle: 1:1
Medium: M850 Medium parameters used (interpolated): f = 836.4 MHz; σ = 1 mho/m; ε_r = 55.1; ρ = 1000 kg/m^3
Phantom section: Flat Section
DASY4 Configuration:
- Probe: ET3DV6 - SN1558; ConvF(5.85, 5.85, 5.85); Calibrated: 23.08.2011
- Sensor-Surface: 4mm (Mechanical And Optical Surface Detection)
- Electronics: DAE3 Sn413; Calibrated: 13.01.2011
- Phantom: SAM 12; Type: SAM; Serial: 1043
- Measurement SW: DASY4, V4.5 Build 19; Postprocessing SW: SEMCAD, V1.8 Build 146

Edge right position - Middle/Area Scan (51x91x1): Measurement grid: dx=15mm, dy=15mm

Maximum value of SAR (interpolated) = 0.967 mW/g

Edge right position - Middle/Zoom Scan (7x7x7) (7x7x7)/Cube 0: Measurement grid: dx=5mm, dy=5mm, dz=5mm

Reference Value = 31.1 V/m; Power Drift = -0.104 dB
Peak SAR (extrapolated) = 1.15 W/kg
SAR(1 g) = 0.880 mW/g; SAR(10 g) = 0.624 mW/g
Maximum value of SAR (measured) = 0.938 mW/g

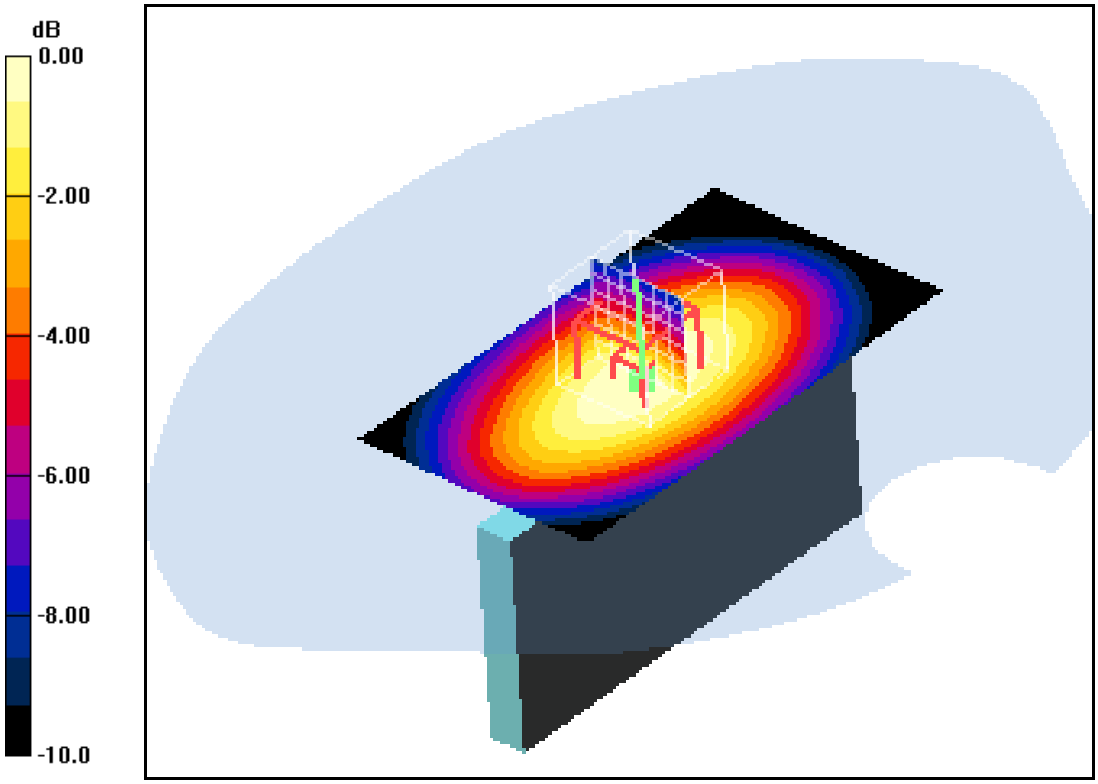

0 dB = 0.938mW/g

Additional information:
position or distance of DUT to SAM: 10 mm
ambient temperature: 23.7°C; liquid temperature: 22.9°C

Date/Time: 04.12.2011 14:01:37Date/Time: 04.12.2011 14:08:47

IEEE1528_OET65-Body-WCDMA FDD V

DUT: Sony Ericsson; Type: AAD-3880136-BV; Serial: CB511VCC34
Communication System: WCDMA FDD V; Frequency: 846.6 MHz; Duty Cycle: 1:1
Medium: M850 Medium parameters used (interpolated): f = 846.6 MHz; σ = 1.02 mho/m; ε_r = 55; ρ = 1000 kg/m^3
Phantom section: Flat Section
DASY4 Configuration:
- Probe: ET3DV6 - SN1558; ConvF(5.85, 5.85, 5.85); Calibrated: 23.08.2011
- Sensor-Surface: 4mm (Mechanical And Optical Surface Detection)
- Electronics: DAE3 Sn413; Calibrated: 13.01.2011
- Phantom: SAM 12; Type: SAM; Serial: 1043
- Measurement SW: DASY4, V4.5 Build 19; Postprocessing SW: SEMCAD, V1.8 Build 146

Edge right position - High/Area Scan (51x91x1): Measurement grid: dx=15mm, dy=15mm

Maximum value of SAR (interpolated) = 1.01 mW/g

Edge right position - High/Zoom Scan (7x7x7) (7x7x7)/Cube 0: Measurement grid: dx=5mm, dy=5mm, dz=5mm

Reference Value = 31.4 V/m; Power Drift = 0.016 dB
Peak SAR (extrapolated) = 1.30 W/kg
SAR(1 g) = 0.957 mW/g; SAR(10 g) = 0.671 mW/g
Maximum value of SAR (measured) = 1.03 mW/g

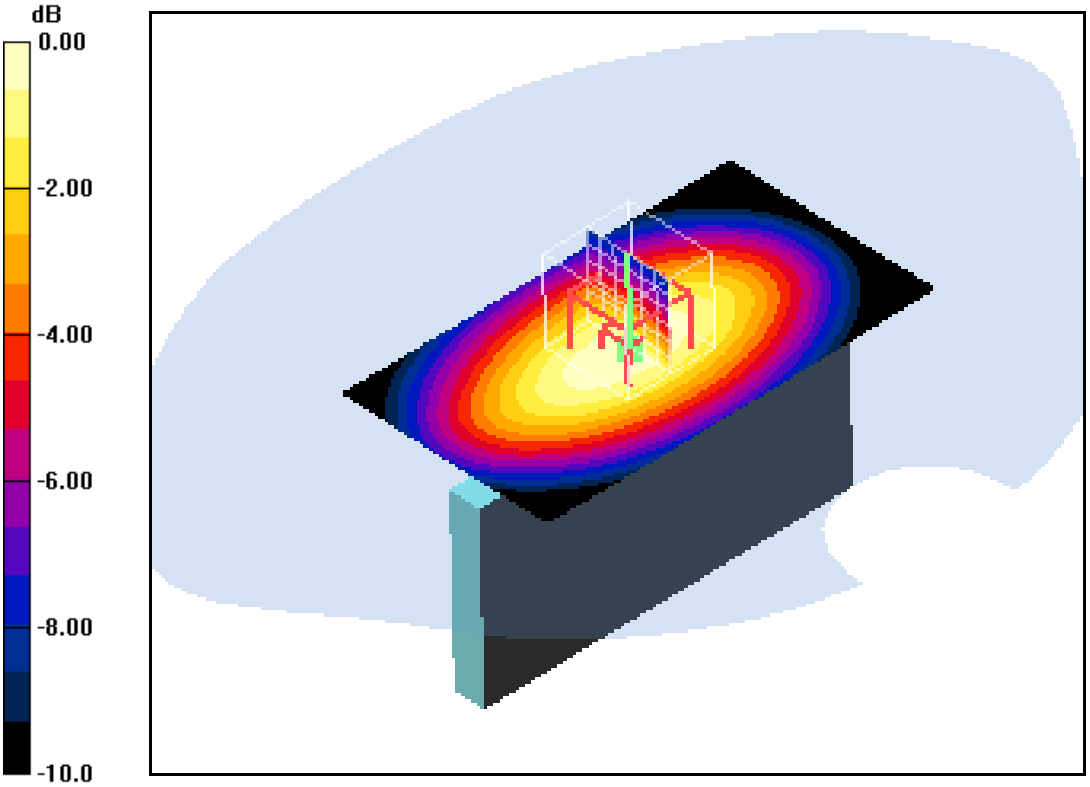

0 dB = 1.03mW/g

Additional information:
position or distance of DUT to SAM: 10 mm
ambient temperature: 23.7°C; liquid temperature: 22.9°C

Date/Time: 04.12.2011 15:41:47Date/Time: 04.12.2011 15:48:19

IEEE1528_OET65-Body-WCDMA FDD V

DUT: Sony Ericsson; Type: AAD-3880136-BV; Serial: CB511VCC34
Communication System: WCDMA FDD V; Frequency: 836.4 MHz; Duty Cycle: 1:1
Medium: M850 Medium parameters used (interpolated): f = 836.4 MHz; σ = 1 mho/m; ε_r = 55.1; ρ = 1000 kg/m^3
Phantom section: Flat Section
DASY4 Configuration:
- Probe: ET3DV6 - SN1558; ConvF(5.85, 5.85, 5.85); Calibrated: 23.08.2011
- Sensor-Surface: 4mm (Mechanical And Optical Surface Detection)
- Electronics: DAE3 Sn413; Calibrated: 13.01.2011
- Phantom: SAM 12; Type: SAM; Serial: 1043
- Measurement SW: DASY4, V4.5 Build 19; Postprocessing SW: SEMCAD, V1.8 Build 146

Edge bottom position - Middle/Area Scan (61x61x1): Measurement grid: dx=15mm, dy=15mm

Maximum value of SAR (interpolated) = 0.149 mW/g

Edge bottom position - Middle/Zoom Scan (7x7x7) (7x7x7)/Cube 0:

Measurement grid: dx=5mm, dy=5mm, dz=5mm
Reference Value = 12.1 V/m; Power Drift = 0.00 dB
Peak SAR (extrapolated) = 0.488 W/kg
SAR(1 g) = 0.167 mW/g; SAR(10 g) = 0.079 mW/g
Maximum value of SAR (measured) = 0.182 mW/g

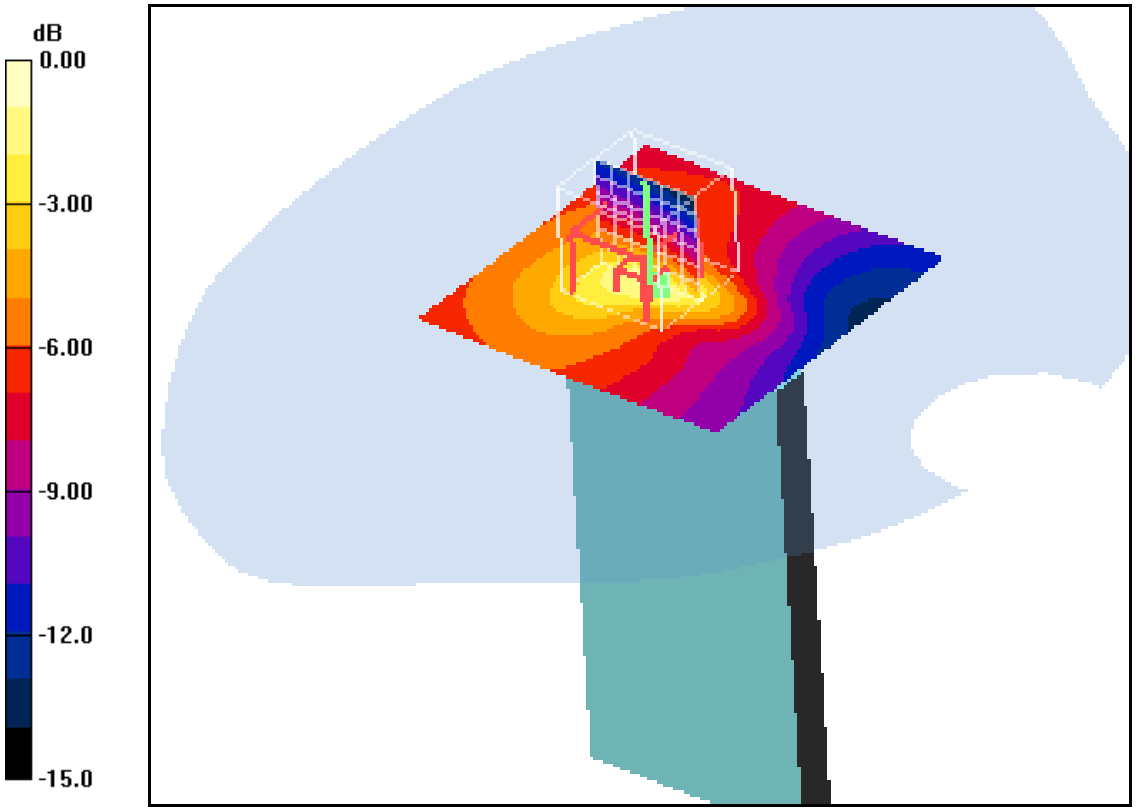

0 dB = 0.182mW/g

Additional information:
position or distance of DUT to SAM: 10 mm
ambient temperature: 23.7°C; liquid temperature: 22.9°C

Date/Time: 04.12.2011 17:53:42Date/Time: 04.12.2011 18:06:54

IEEE1528_OET65-Body-WCDMA FDD V

DUT: Sony Ericsson; Type: AAD-3880136-BV; Serial: CB511VCC34
Communication System: WCDMA FDD V; Frequency: 846.6 MHz; Duty Cycle: 1:1
Medium: M850 Medium parameters used (interpolated): f = 846.6 MHz; σ = 1.02 mho/m; ε_r = 55; ρ = 1000 kg/m^3
Phantom section: Flat Section
DASY4 Configuration:
- Probe: ET3DV6 - SN1558; ConvF(5.85, 5.85, 5.85); Calibrated: 23.08.2011
- Sensor-Surface: 4mm (Mechanical And Optical Surface Detection)
- Electronics: DAE3 Sn413; Calibrated: 13.01.2011
- Phantom: SAM 12; Type: SAM; Serial: 1043
- Measurement SW: DASY4, V4.5 Build 19; Postprocessing SW: SEMCAD, V1.8 Build 146

Rear position - High 15mm/Area Scan (51x101x1): Measurement grid: dx=15mm, dy=15mm

Maximum value of SAR (interpolated) = 0.731 mW/g

Rear position - High 15mm/Zoom Scan (7x7x7) (7x7x7)/Cube 0: Measurement grid: dx=5mm, dy=5mm, dz=5mm

Reference Value = 27.2 V/m; Power Drift = -0.030 dB
Peak SAR (extrapolated) = 0.862 W/kg
SAR(1 g) = 0.690 mW/g; SAR(10 g) = 0.517 mW/g
Maximum value of SAR (measured) = 0.727 mW/g

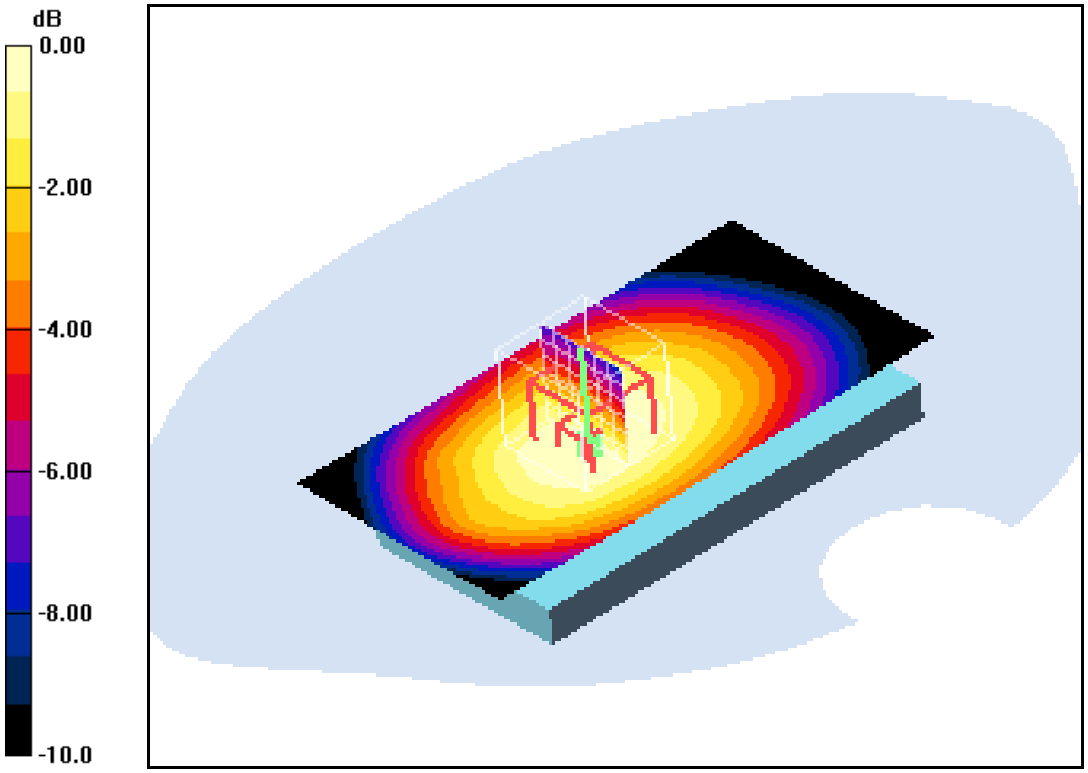

0 dB = 0.727mW/g

Additional information:
position or distance of DUT to SAM: 15 mm
ambient temperature: 23.7°C; liquid temperature: 22.9°C

Annex B.7: WLAN 2450MHz head

Date/Time: 30.11.2011 14:46:18Date/Time: 30.11.2011 14:54:17

IEEE1528_OET65-LeftHandSide-WLAN

DUT: Sony Ericsson; Type: AAD-3880136-BV; Serial: CB511VCBXB
Communication System: WLAN 2450 US; Frequency: 2412 MHz; Duty Cycle: 1:1
Medium: HSL2450 Medium parameters used: f = 2412 MHz; σ = 1.78 mho/m; ε_r = 38.4; ρ = 1000 kg/m^3
Phantom section: Left Section
DASY4 Configuration:
- Probe: ET3DV6 - SN1559; ConvF(4.38, 4.38, 4.38); Calibrated: 19.01.2011
- Sensor-Surface: 4mm (Mechanical And Optical Surface Detection)
- Electronics: DAE3 Sn477; Calibrated: 04.05.2011
- Phantom: SAM left; Type: SAM; Serial: 1041
- Measurement SW: DASY4, V4.7 Build 71; Postprocessing SW: SEMCAD, V1.8 Build 146

Touch position - Low/Area Scan (51x91x1): Measurement grid: dx=15mm, dy=15mm

Maximum value of SAR (interpolated) = 0.223 mW/g

Touch position - Low/Zoom Scan (7x7x7) (9x7x7)/Cube 0: Measurement grid: dx=5mm, dy=5mm, dz=5mm

Reference Value = 11.6 V/m; Power Drift = 0.01 dB
Peak SAR (extrapolated) = 0.377 W/kg
SAR(1 g) = 0.202 mW/g; SAR(10 g) = 0.102 mW/g
Maximum value of SAR (measured) = 0.223 mW/g

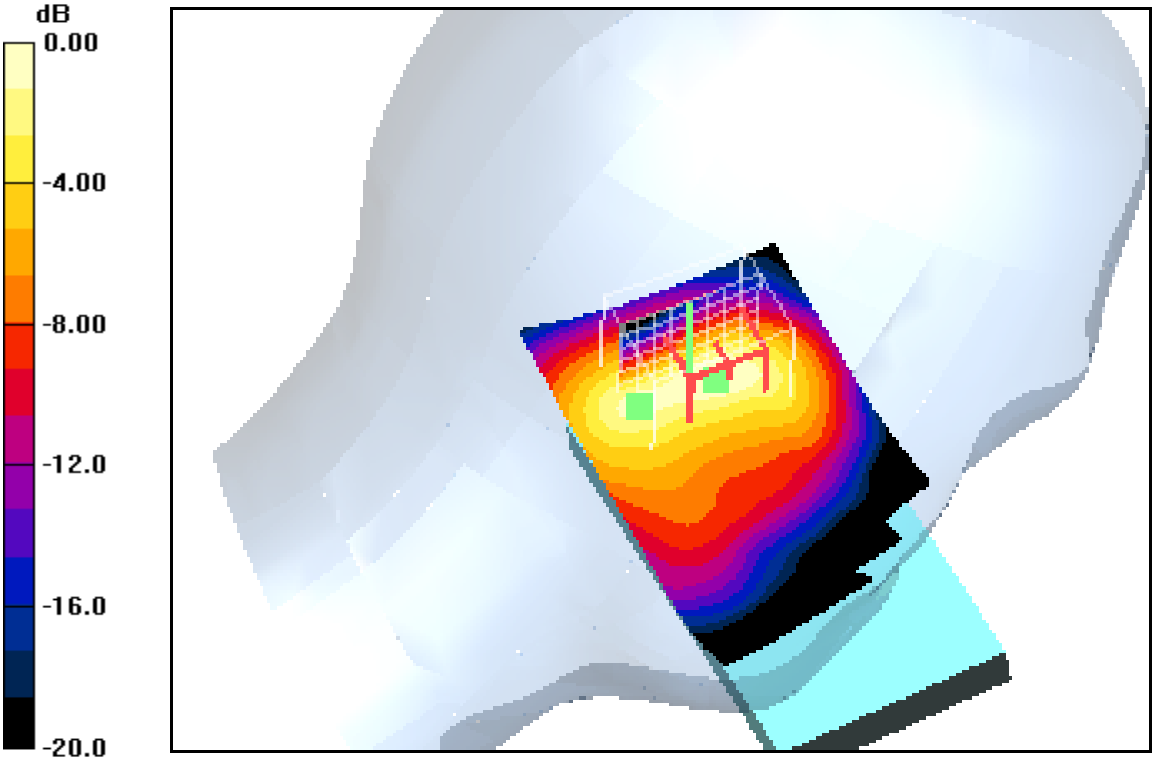

0 dB = 0.223mW/g

Additional information:
ambient temperature: 22.4°C; liquid temperature: 20.7°C

Date/Time: 30.11.2011 15:28:00Date/Time: 30.11.2011 15:36:18

IEEE1528_OET65-LeftHandSide-WLAN

DUT: Sony Ericsson; Type: AAD-3880136-BV; Serial: CB511VCBXB
Communication System: WLAN 2450 US; Frequency: 2437 MHz; Duty Cycle: 1:1
Medium: HSL2450 Medium parameters used (interpolated): f = 2437 MHz; σ = 1.8 mho/m; ε_r = 38.4; ρ = 1000 kg/m^3
Phantom section: Left Section
DASY4 Configuration:
- Probe: ET3DV6 - SN1559; ConvF(4.38, 4.38, 4.38); Calibrated: 19.01.2011
- Sensor-Surface: 4mm (Mechanical And Optical Surface Detection)
- Electronics: DAE3 Sn477; Calibrated: 04.05.2011
- Phantom: SAM left; Type: SAM; Serial: 1041
- Measurement SW: DASY4, V4.7 Build 71; Postprocessing SW: SEMCAD, V1.8 Build 146

Touch position - Middle/Area Scan (51x91x1): Measurement grid: dx=15mm, dy=15mm

Maximum value of SAR (interpolated) = 0.306 mW/g

Touch position - Middle/Zoom Scan (7x7x7) (7x7x7)/Cube 0: Measurement grid: dx=5mm, dy=5mm, dz=5mm

Reference Value = 11.8 V/m; Power Drift = -0.01 dB
Peak SAR (extrapolated) = 0.528 W/kg
SAR(1 g) = 0.283 mW/g; SAR(10 g) = 0.141 mW/g
Maximum value of SAR (measured) = 0.328 mW/g

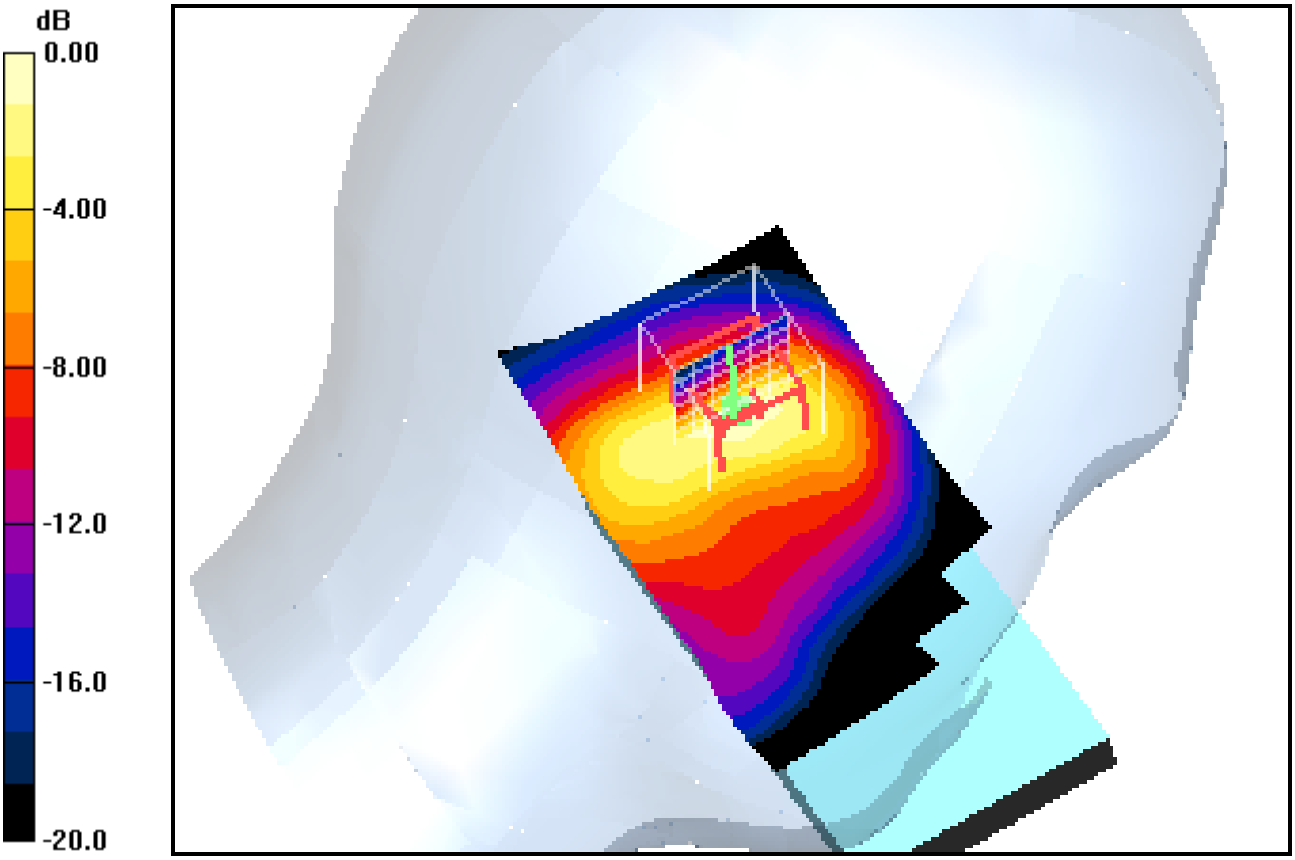

0 dB = 0.328mW/g

Additional information:
ambient temperature: 22.4°C; liquid temperature: 20.7°C

Date/Time: 30.11.2011 18:51:58Date/Time: 30.11.2011 18:58:32

IEEE1528_OET65-LeftHandSide-WLAN

DUT: Sony Ericsson; Type: AAD-3880136-BV; Serial: CB511VCBXB
Communication System: WLAN 2450 US; Frequency: 2462 MHz; Duty Cycle: 1:1
Medium: HSL2450 Medium parameters used: f = 2462 MHz; σ = 1.83 mho/m; ε_r = 38.3; ρ = 1000 kg/m^3
Phantom section: Left Section
DASY4 Configuration:
- Probe: ET3DV6 - SN1559; ConvF(4.38, 4.38, 4.38); Calibrated: 19.01.2011
- Sensor-Surface: 4mm (Mechanical And Optical Surface Detection)
- Electronics: DAE3 Sn477; Calibrated: 04.05.2011
- Phantom: SAM left; Type: SAM; Serial: 1041
- Measurement SW: DASY4, V4.7 Build 71; Postprocessing SW: SEMCAD, V1.8 Build 146

Touch position - High/Area Scan (51x91x1): Measurement grid: dx=15mm, dy=15mm

Maximum value of SAR (interpolated) = 0.269 mW/g

Touch position - High/Zoom Scan (7x7x7) (10x7x7)/Cube 0: Measurement grid: dx=5mm, dy=5mm, dz=5mm

Reference Value = 11.3 V/m; Power Drift = -0.01 dB
Peak SAR (extrapolated) = 0.522 W/kg
SAR(1 g) = 0.254 mW/g; SAR(10 g) = 0.128 mW/g
Maximum value of SAR (measured) = 0.285 mW/g

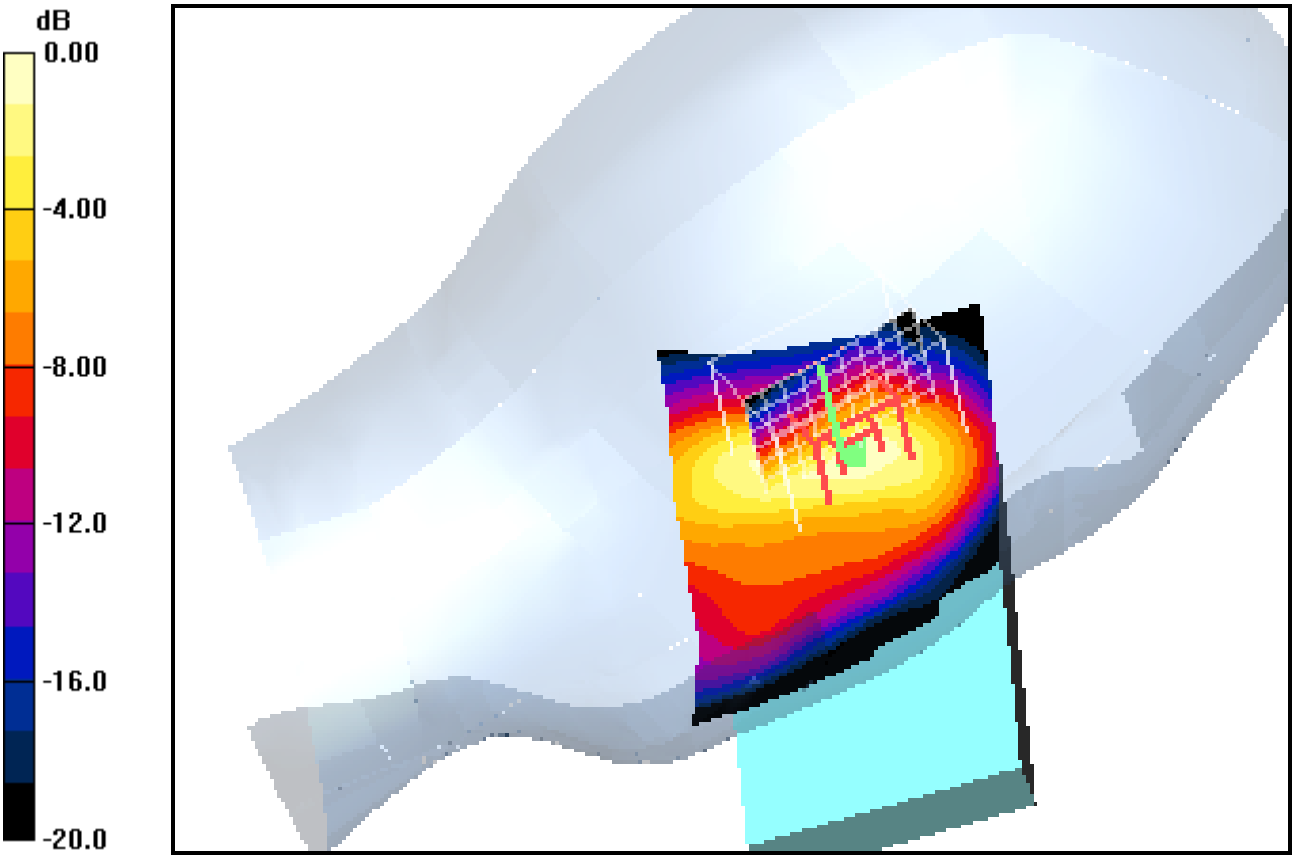

0 dB = 0.285mW/g

Additional information:
ambient temperature: 22.4°C; liquid temperature: 20.7°C

Date/Time: 30.11.2011 13:56:51Date/Time: 30.11.2011 14:04:38

IEEE1528_OET65-LeftHandSide-WLAN

DUT: Sony Ericsson; Type: AAD-3880136-BV; Serial: CB511VCBXB
Communication System: WLAN 2450 US; Frequency: 2412 MHz; Duty Cycle: 1:1
Medium: HSL2450 Medium parameters used: f = 2412 MHz; σ = 1.78 mho/m; ε_r = 38.4; ρ = 1000 kg/m^3
Phantom section: Left Section
DASY4 Configuration:
- Probe: ET3DV6 - SN1559; ConvF(4.38, 4.38, 4.38); Calibrated: 19.01.2011
- Sensor-Surface: 4mm (Mechanical And Optical Surface Detection)
- Electronics: DAE3 Sn477; Calibrated: 04.05.2011
- Phantom: SAM left; Type: SAM; Serial: 1041
- Measurement SW: DASY4, V4.7 Build 71; Postprocessing SW: SEMCAD, V1.8 Build 146

Tilt position - Low/Area Scan (51x91x1): Measurement grid: dx=15mm, dy=15mm

Maximum value of SAR (interpolated) = 0.213 mW/g

Tilt position - Low/Zoom Scan (7x7x7) (7x7x7)/Cube 0: Measurement grid: dx=5mm, dy=5mm, dz=5mm

Reference Value = 10.8 V/m; Power Drift = 0.063 dB
Peak SAR (extrapolated) = 0.360 W/kg
SAR(1 g) = 0.191 mW/g; SAR(10 g) = 0.094 mW/g
Maximum value of SAR (measured) = 0.219 mW/g

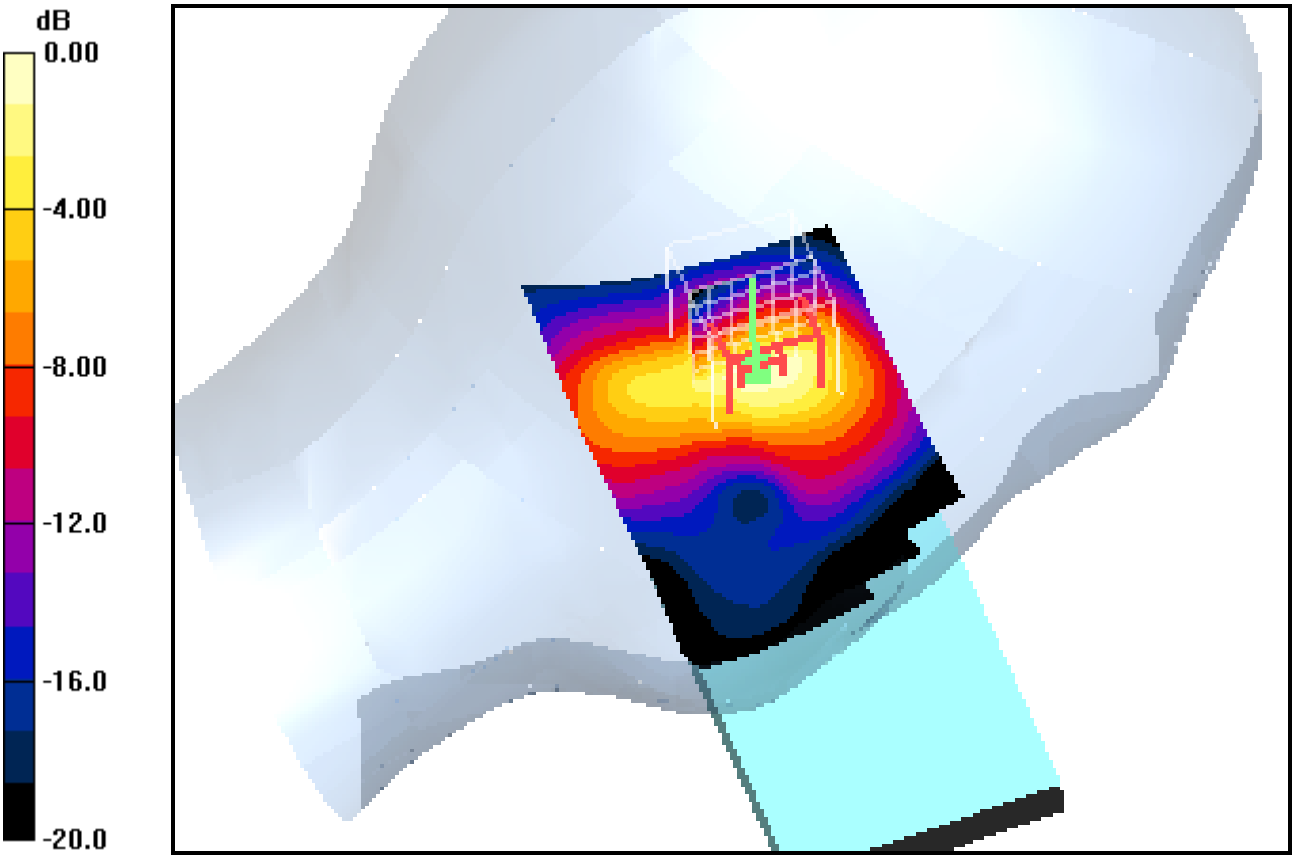

0 dB = 0.219mW/g

Additional information:
ambient temperature: 22.4°C; liquid temperature: 20.7°C

Date/Time: 30.11.2011 16:05:03Date/Time: 30.11.2011 16:14:55

IEEE1528_OET65-LeftHandSide-WLAN

DUT: Sony Ericsson; Type: AAD-3880136-BV; Serial: CB511VCBXB
Communication System: WLAN 2450 US; Frequency: 2437 MHz; Duty Cycle: 1:1
Medium: HSL2450 Medium parameters used (interpolated): f = 2437 MHz; σ = 1.8 mho/m; ε_r = 38.4; ρ = 1000 kg/m^3
Phantom section: Left Section
DASY4 Configuration:
- Probe: ET3DV6 - SN1559; ConvF(4.38, 4.38, 4.38); Calibrated: 19.01.2011
- Sensor-Surface: 4mm (Mechanical And Optical Surface Detection)
- Electronics: DAE3 Sn477; Calibrated: 04.05.2011
- Phantom: SAM left; Type: SAM; Serial: 1041
- Measurement SW: DASY4, V4.7 Build 71; Postprocessing SW: SEMCAD, V1.8 Build 146

Tilt position - Middle/Area Scan (51x91x1): Measurement grid: dx=15mm, dy=15mm
Maximum value of SAR (interpolated) = 0.266 mW/g

Tilt position - Middle/Zoom Scan (7x7x7) (7x7x7)/Cube 0: Measurement grid: dx=5mm, dy=5mm, dz=5mm
Reference Value = 12.7 V/m; Power Drift = -0.013 dB
Peak SAR (extrapolated) = 0.479 W/kg
SAR(1 g) = 0.254 mW/g; SAR(10 g) = 0.124 mW/g
Maximum value of SAR (measured) = 0.282 mW/g

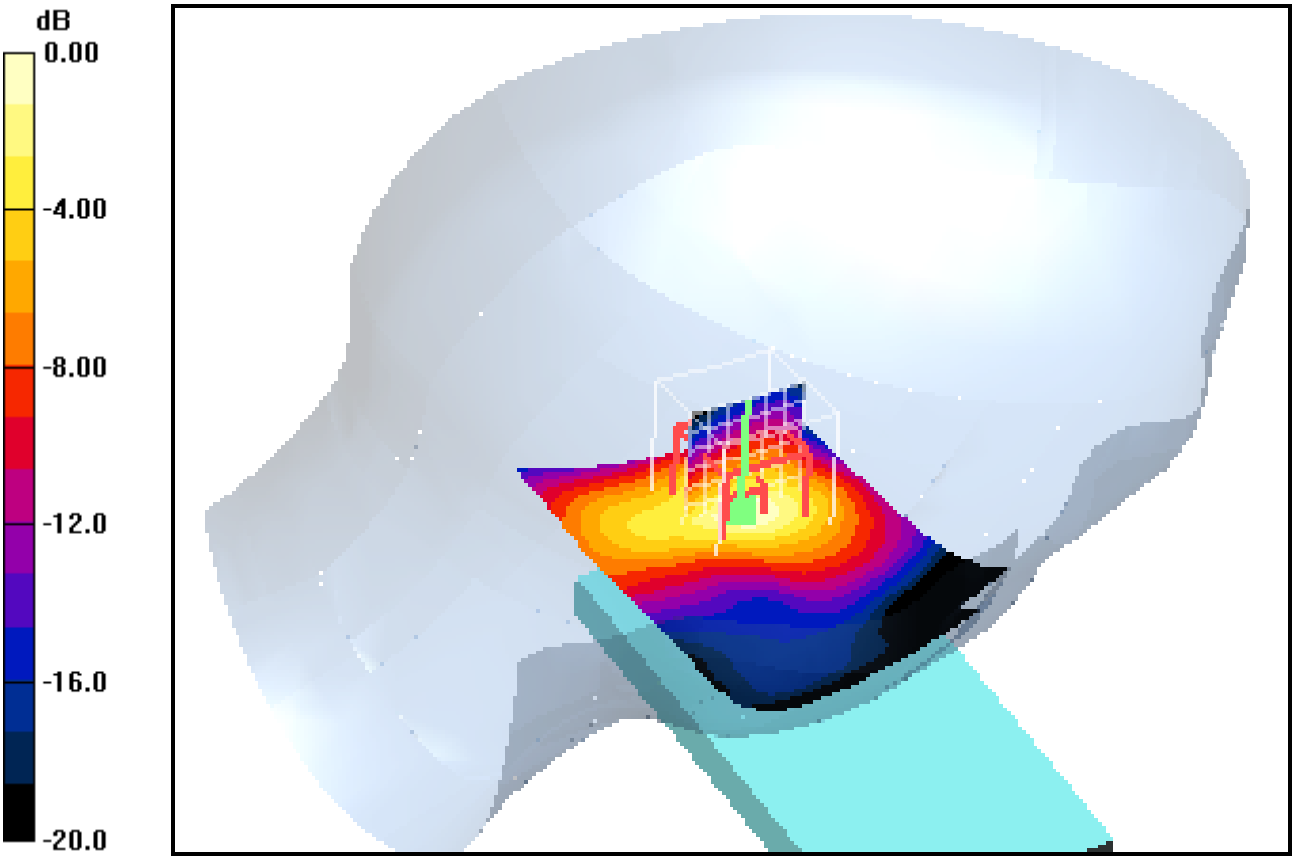

0 dB = 0.282mW/g

Additional information:
ambient temperature: 22.4°C; liquid temperature: 20.7°C

Date/Time: 30.11.2011 18:29:43Date/Time: 30.11.2011 18:36:25

IEEE1528_OET65-LeftHandSide-WLAN

DUT: Sony Ericsson; Type: AAD-3880136-BV; Serial: CB511VCBXB
Communication System: WLAN 2450 US; Frequency: 2462 MHz; Duty Cycle: 1:1
Medium: HSL2450 Medium parameters used: f = 2462 MHz; σ = 1.83 mho/m; ε_r = 38.3; ρ = 1000 kg/m^3
Phantom section: Left Section
DASY4 Configuration:
- Probe: ET3DV6 - SN1559; ConvF(4.38, 4.38, 4.38); Calibrated: 19.01.2011
- Sensor-Surface: 4mm (Mechanical And Optical Surface Detection)
- Electronics: DAE3 Sn477; Calibrated: 04.05.2011
- Phantom: SAM left; Type: SAM; Serial: 1041
- Measurement SW: DASY4, V4.7 Build 71; Postprocessing SW: SEMCAD, V1.8 Build 146

Tilt position - High/Area Scan (51x91x1): Measurement grid: dx=15mm, dy=15mm
Maximum value of SAR (interpolated) = 0.319 mW/g

Tilt position - High/Zoom Scan (7x7x7) (8x7x7)/Cube 0: Measurement grid: dx=5mm, dy=5mm, dz=5mm
Reference Value = 12.9 V/m; Power Drift = 0.031 dB
Peak SAR (extrapolated) = 0.527 W/kg
SAR(1 g) = 0.276 mW/g; SAR(10 g) = 0.134 mW/g
Maximum value of SAR (measured) = 0.317 mW/g

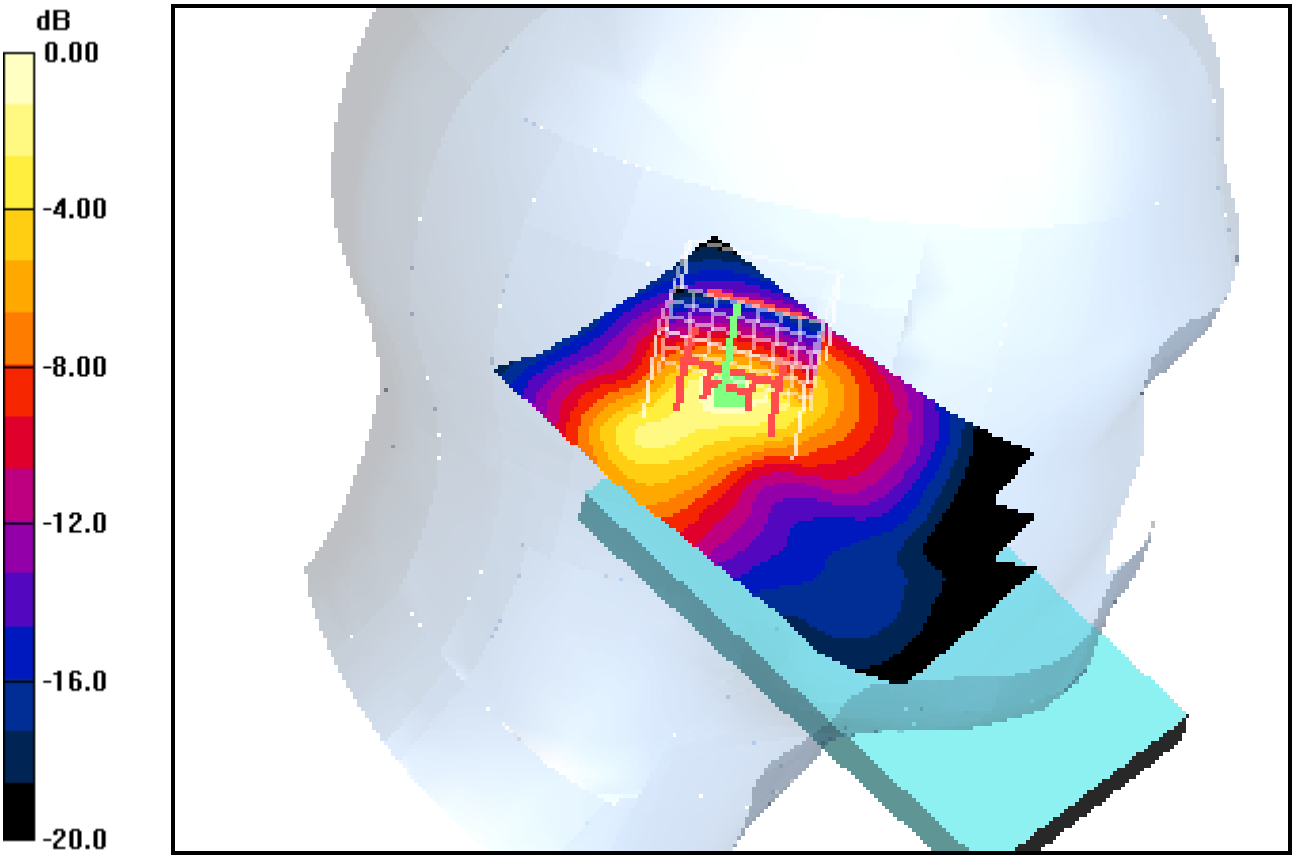

0 dB = 0.317mW/g

Additional information:
ambient temperature: 22.4°C; liquid temperature: 20.7°C

Date/Time: 30.11.2011 12:57:27Date/Time: 30.11.2011 13:08:12

IEEE1528_OET65-RightHandSide-WLAN

DUT: Sony Ericsson; Type: AAD-3880136-BV; Serial: CB511VCBXB
Communication System: WLAN 2450 US; Frequency: 2412 MHz; Duty Cycle: 1:1
Medium: HSL2450 Medium parameters used: f = 2412 MHz; σ = 1.78 mho/m; ε_r = 38.4; ρ = 1000 kg/m^3
Phantom section: Right Section
DASY4 Configuration:
- Probe: ET3DV6 - SN1559; ConvF(4.38, 4.38, 4.38); Calibrated: 19.01.2011
- Sensor-Surface: 4mm (Mechanical And Optical Surface Detection)
- Electronics: DAE3 Sn477; Calibrated: 04.05.2011
- Phantom: SAM left; Type: SAM; Serial: 1041
- Measurement SW: DASY4, V4.7 Build 71; Postprocessing SW: SEMCAD, V1.8 Build 146

Touch position - Low/Area Scan (51x91x1): Measurement grid: dx=15mm, dy=15mm

Maximum value of SAR (interpolated) = 0.493 mW/g

Touch position - Low/Zoom Scan (7x7x7) (7x7x7)/Cube 0: Measurement grid: dx=5mm, dy=5mm, dz=5mm

Reference Value = 16.9 V/m; Power Drift = 0.013 dB
Peak SAR (extrapolated) = 0.913 W/kg
SAR(1 g) = 0.430 mW/g; SAR(10 g) = 0.199 mW/g
Maximum value of SAR (measured) = 0.488 mW/g

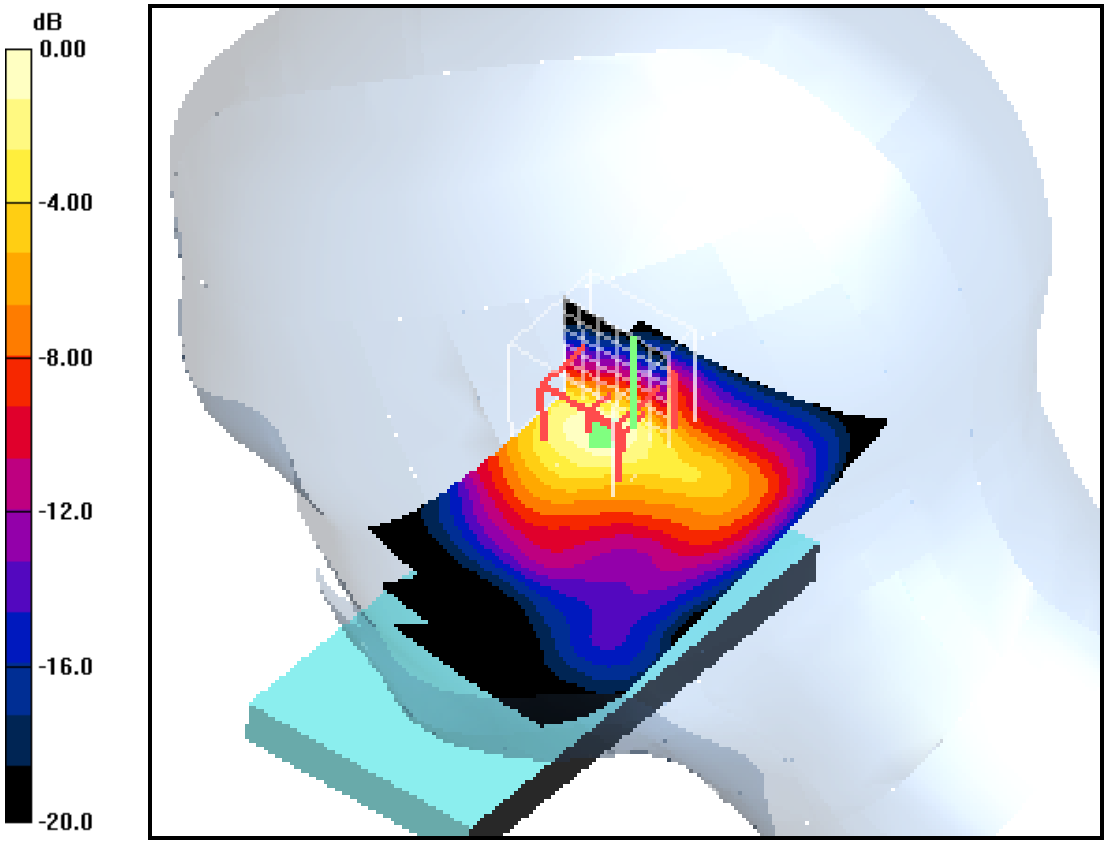

0 dB = 0.488mW/g

Additional information:
ambient temperature: 22.4°C; liquid temperature: 20.7°C

Date/Time: 30.11.2011 17:17:47Date/Time: 30.11.2011 17:24:29

IEEE1528_OET65-RightHandSide-WLAN

DUT: Sony Ericsson; Type: AAD-3880136-BV; Serial: CB511VCBXB
Communication System: WLAN 2450 US; Frequency: 2437 MHz; Duty Cycle: 1:1
Medium: HSL2450 Medium parameters used (interpolated): f = 2437 MHz; σ = 1.8 mho/m; ε_r = 38.4; ρ = 1000 kg/m^3
Phantom section: Right Section
DASY4 Configuration:
- Probe: ET3DV6 - SN1559; ConvF(4.38, 4.38, 4.38); Calibrated: 19.01.2011
- Sensor-Surface: 4mm (Mechanical And Optical Surface Detection)
- Electronics: DAE3 Sn477; Calibrated: 04.05.2011
- Phantom: SAM left; Type: SAM; Serial: 1041
- Measurement SW: DASY4, V4.7 Build 71; Postprocessing SW: SEMCAD, V1.8 Build 146

Touch position - Middle/Area Scan (51x91x1): Measurement grid: dx=15mm, dy=15mm

Maximum value of SAR (interpolated) = 0.589 mW/g

Touch position - Middle/Zoom Scan (7x7x7) (7x7x7)/Cube 0: Measurement grid: dx=5mm, dy=5mm, dz=5mm

Reference Value = 16.4 V/m; Power Drift = 0.00 dB
Peak SAR (extrapolated) = 1.14 W/kg
SAR(1 g) = 0.524 mW/g; SAR(10 g) = 0.243 mW/g
Maximum value of SAR (measured) = 0.617 mW/g

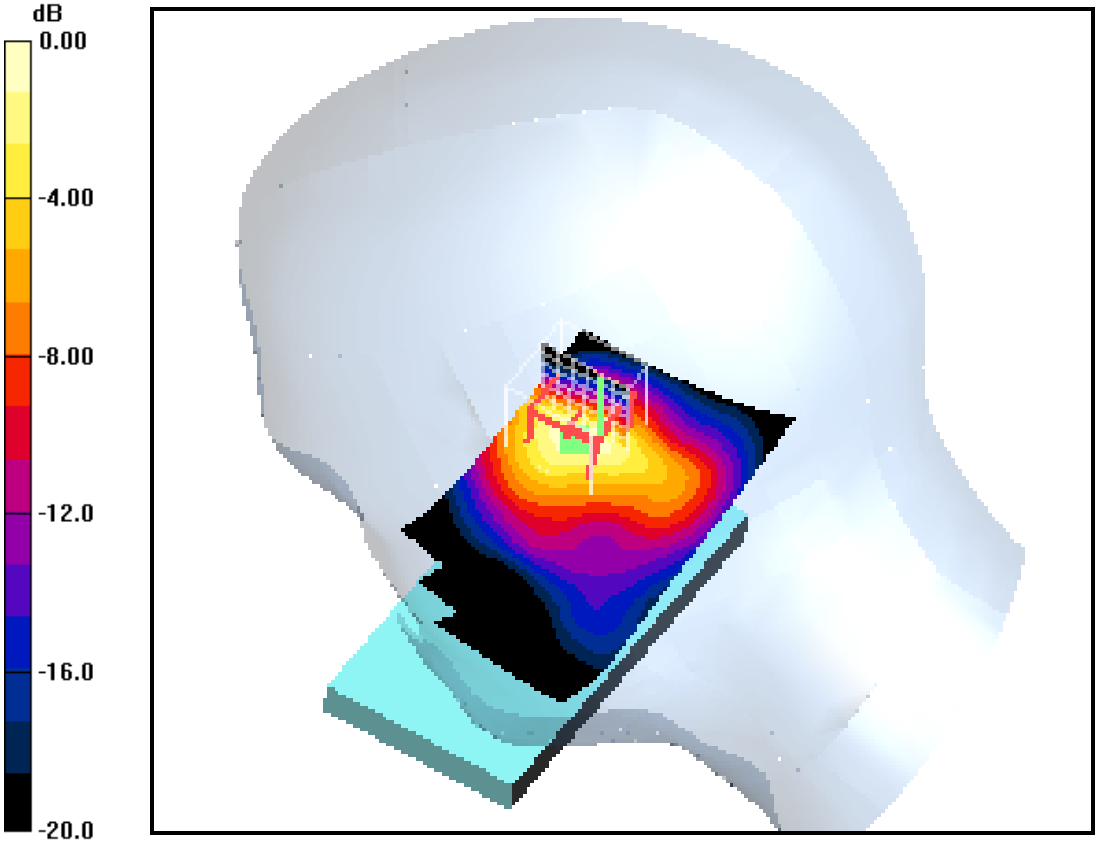

0 dB = 0.617mW/g

Additional information:
ambient temperature: 22.4°C; liquid temperature: 20.7°C

Date/Time: 30.11.2011 17:41:33Date/Time: 30.11.2011 17:48:27

IEEE1528_OET65-RightHandSide-WLAN

DUT: Sony Ericsson; Type: AAD-3880136-BV; Serial: CB511VCBXB
Communication System: WLAN 2450 US; Frequency: 2462 MHz; Duty Cycle: 1:1
Medium: HSL2450 Medium parameters used: f = 2462 MHz; σ = 1.83 mho/m; ε_r = 38.3; ρ = 1000 kg/m^3
Phantom section: Right Section
DASY4 Configuration:
- Probe: ET3DV6 - SN1559; ConvF(4.38, 4.38, 4.38); Calibrated: 19.01.2011
- Sensor-Surface: 4mm (Mechanical And Optical Surface Detection)
- Electronics: DAE3 Sn477; Calibrated: 04.05.2011
- Phantom: SAM left; Type: SAM; Serial: 1041
- Measurement SW: DASY4, V4.7 Build 71; Postprocessing SW: SEMCAD, V1.8 Build 146

Touch position - High/Area Scan (51x91x1): Measurement grid: dx=15mm, dy=15mm

Maximum value of SAR (interpolated) = 0.697 mW/g

Touch position - High/Zoom Scan (7x7x7) (7x7x7)/Cube 0: Measurement grid: dx=5mm, dy=5mm, dz=5mm

Reference Value = 18.1 V/m; Power Drift = -0.01 dB
Peak SAR (extrapolated) = 1.40 W/kg
SAR(1 g) = 0.639 mW/g; SAR(10 g) = 0.297 mW/g
Maximum value of SAR (measured) = 0.735 mW/g

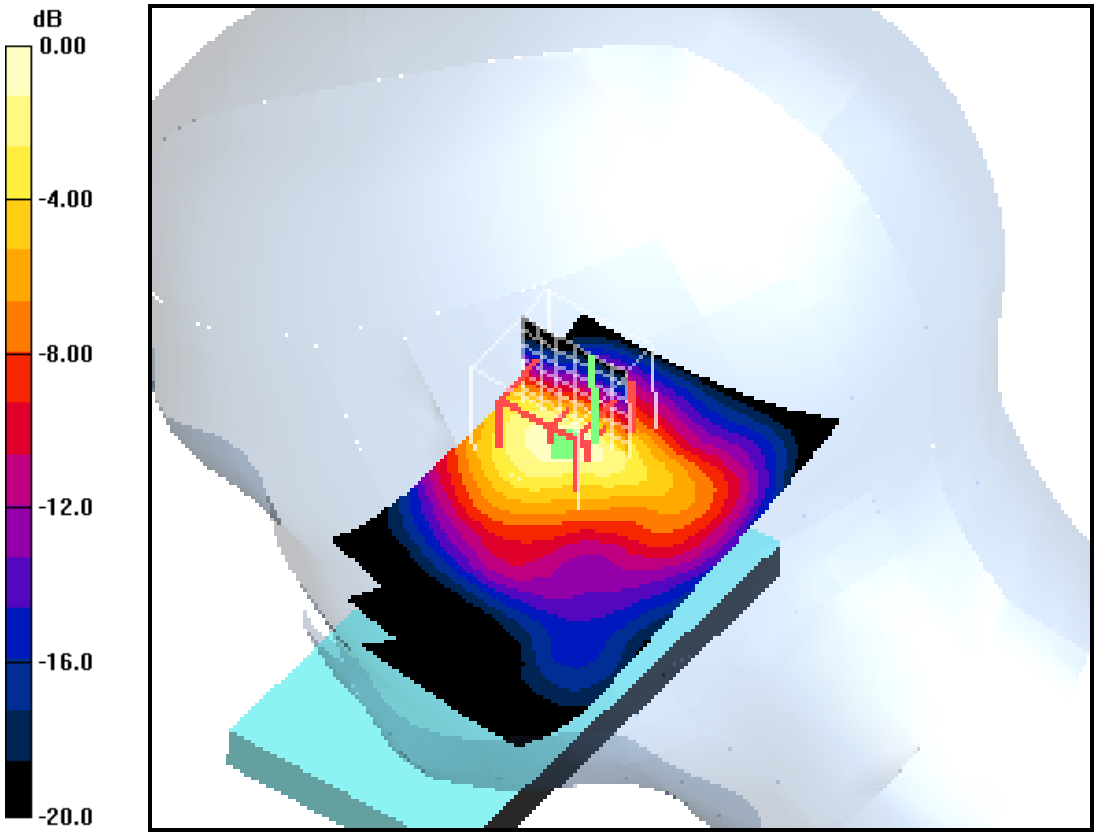

0 dB = 0.735mW/g

Additional information:
ambient temperature: 22.4°C; liquid temperature: 20.7°C

Date/Time: 30.11.2011 13:26:25Date/Time: 30.11.2011 13:38:49

IEEE1528_OET65-RightHandSide-WLAN

DUT: Sony Ericsson; Type: AAD-3880136-BV; Serial: CB511VCBXB
Communication System: WLAN 2450 US; Frequency: 2412 MHz; Duty Cycle: 1:1
Medium: HSL2450 Medium parameters used: f = 2412 MHz; σ = 1.78 mho/m; ε_r = 38.4; ρ = 1000 kg/m^3
Phantom section: Right Section
DASY4 Configuration:
- Probe: ET3DV6 - SN1559; ConvF(4.38, 4.38, 4.38); Calibrated: 19.01.2011
- Sensor-Surface: 4mm (Mechanical And Optical Surface Detection)
- Electronics: DAE3 Sn477; Calibrated: 04.05.2011
- Phantom: SAM left; Type: SAM; Serial: 1041
- Measurement SW: DASY4, V4.7 Build 71; Postprocessing SW: SEMCAD, V1.8 Build 146

Tilt position - Low/Area Scan (51x81x1): Measurement grid: dx=15mm, dy=15mm

Maximum value of SAR (interpolated) = 0.249 mW/g

Tilt position - Low/Zoom Scan (7x7x7) (8x7x7)/Cube 0: Measurement grid: dx=5mm, dy=5mm, dz=5mm

Reference Value = 11.8 V/m; Power Drift = -0.053 dB
Peak SAR (extrapolated) = 0.632 W/kg
SAR(1 g) = 0.268 mW/g; SAR(10 g) = 0.114 mW/g
Maximum value of SAR (measured) = 0.295 mW/g

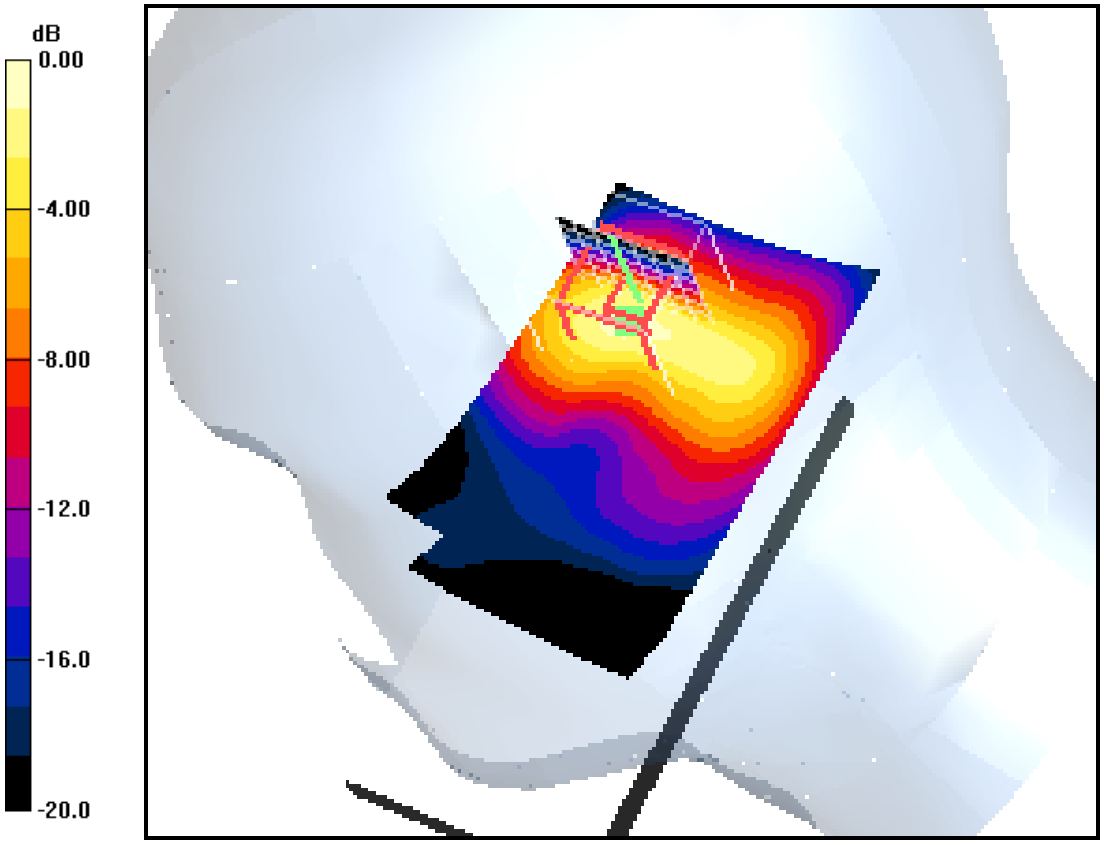

0 dB = 0.295mW/g

Additional information:
ambient temperature: 22.4°C; liquid temperature: 20.7°C

Date/Time: 30.11.2011 16:30:27Date/Time: 30.11.2011 16:38:42

IEEE1528_OET65-RightHandSide-WLAN

DUT: Sony Ericsson; Type: AAD-3880136-BV; Serial: CB511VCBXB
Communication System: WLAN 2450 US; Frequency: 2437 MHz; Duty Cycle: 1:1
Medium: HSL2450 Medium parameters used (interpolated): f = 2437 MHz; σ = 1.8 mho/m; ε_r = 38.4; ρ = 1000 kg/m^3
Phantom section: Right Section
DASY4 Configuration:
- Probe: ET3DV6 - SN1559; ConvF(4.38, 4.38, 4.38); Calibrated: 19.01.2011
- Sensor-Surface: 4mm (Mechanical And Optical Surface Detection)
- Electronics: DAE3 Sn477; Calibrated: 04.05.2011
- Phantom: SAM left; Type: SAM; Serial: 1041
- Measurement SW: DASY4, V4.7 Build 71; Postprocessing SW: SEMCAD, V1.8 Build 146

Tilt position - Middle/Area Scan (51x81x1): Measurement grid: dx=15mm, dy=15mm

Maximum value of SAR (interpolated) = 0.353 mW/g

Tilt position - Middle/Zoom Scan (7x7x7) (8x7x7)/Cube 0: Measurement grid: dx=5mm, dy=5mm, dz=5mm

Reference Value = 14.0 V/m; Power Drift = 0.084 dB
Peak SAR (extrapolated) = 0.903 W/kg
SAR(1 g) = 0.383 mW/g; SAR(10 g) = 0.165 mW/g
Maximum value of SAR (measured) = 0.419 mW/g

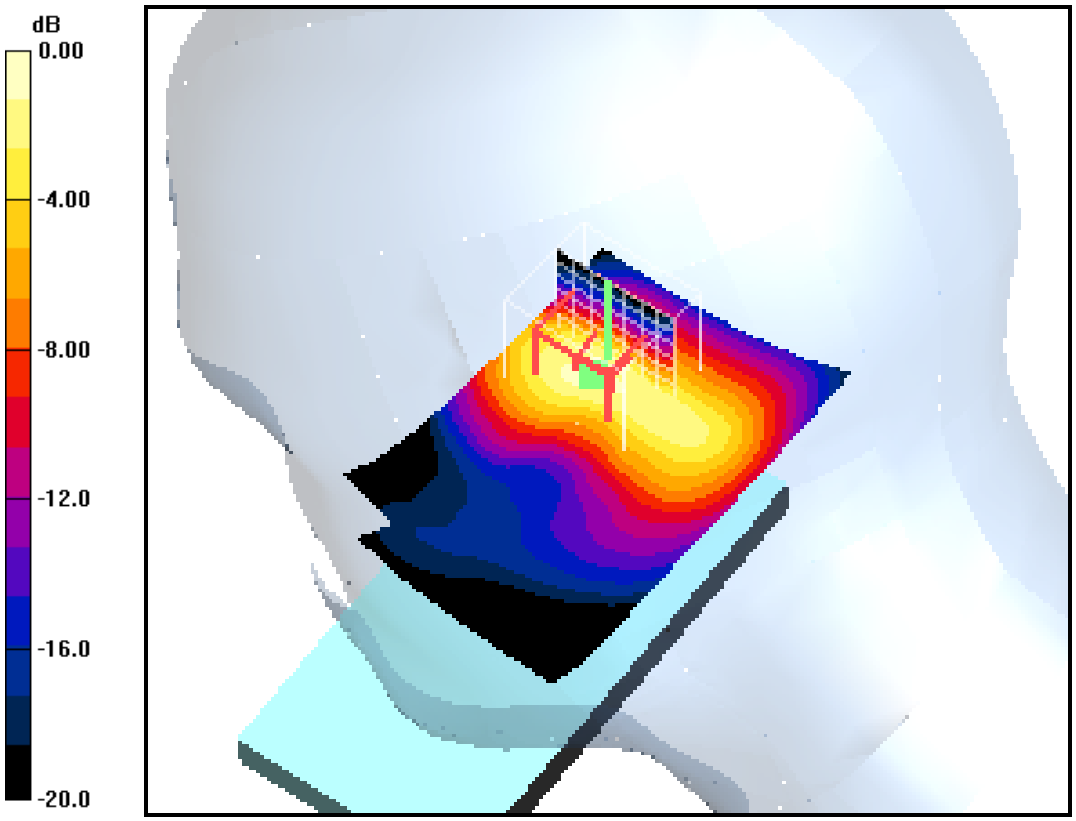

0 dB = 0.419mW/g

Additional information:
ambient temperature: 22.4°C; liquid temperature: 20.7°C

Date/Time: 30.11.2011 18:03:14Date/Time: 30.11.2011 18:09:31

IEEE1528_OET65-RightHandSide-WLAN

DUT: Sony Ericsson; Type: AAD-3880136-BV; Serial: CB511VCBXB
Communication System: WLAN 2450 US; Frequency: 2462 MHz; Duty Cycle: 1:1
Medium: HSL2450 Medium parameters used: f = 2462 MHz; σ = 1.83 mho/m; ε_r = 38.3; ρ = 1000 kg/m^3
Phantom section: Right Section
DASY4 Configuration:
- Probe: ET3DV6 - SN1559; ConvF(4.38, 4.38, 4.38); Calibrated: 19.01.2011
- Sensor-Surface: 4mm (Mechanical And Optical Surface Detection)
- Electronics: DAE3 Sn477; Calibrated: 04.05.2011
- Phantom: SAM left; Type: SAM; Serial: 1041
- Measurement SW: DASY4, V4.7 Build 71; Postprocessing SW: SEMCAD, V1.8 Build 146

Tilt position - High/Area Scan (51x81x1): Measurement grid: dx=15mm, dy=15mm

Maximum value of SAR (interpolated) = 0.524 mW/g

Tilt position - High/Zoom Scan (7x7x7) (8x7x7)/Cube 0: Measurement grid: dx=5mm, dy=5mm, dz=5mm

Reference Value = 17.4 V/m; Power Drift = 0.072 dB
Peak SAR (extrapolated) = 1.26 W/kg
SAR(1 g) = 0.529 mW/g; SAR(10 g) = 0.229 mW/g
Maximum value of SAR (measured) = 0.594 mW/g

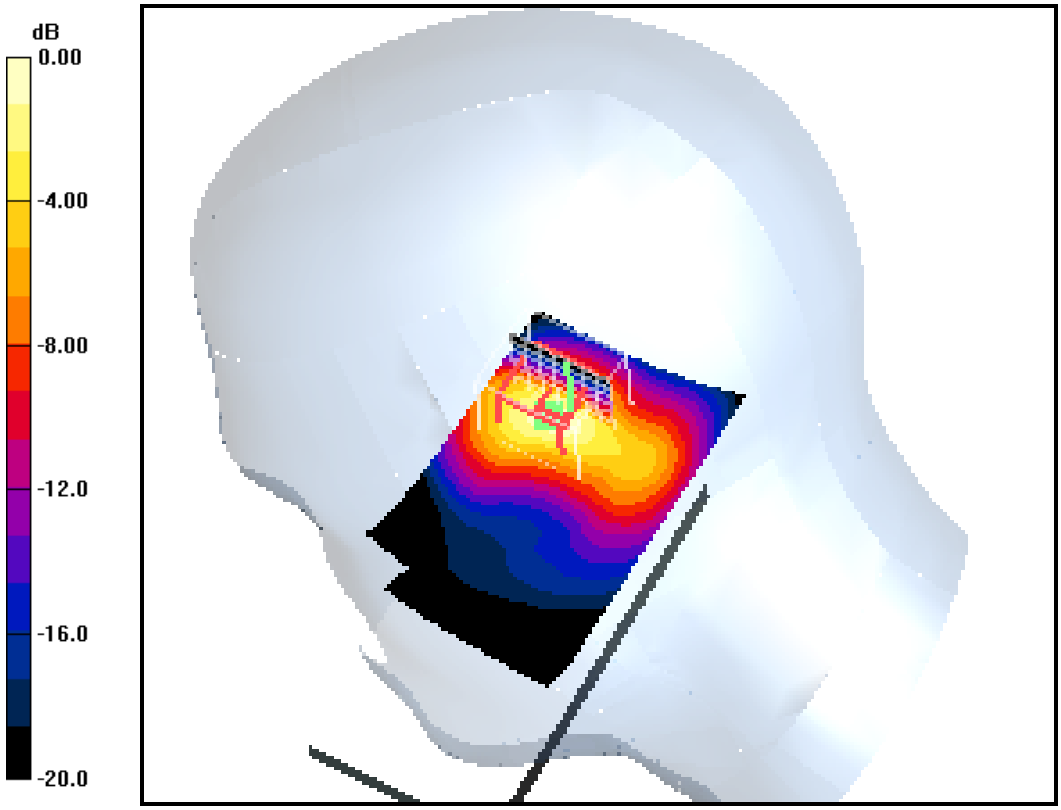

0 dB = 0.594mW/g

Additional information:
ambient temperature: 22.4°C; liquid temperature: 20.7°C

Date/Time: 30.11.2011 20:44:09Date/Time: 30.11.2011 20:52:15

IEEE1528_OET65-RightHandSide-WLAN

DUT: Sony Ericsson; Type: AAD-3880136-BV; Serial: CB511VCBXB
Communication System: WLAN 2450 US; Frequency: 2462 MHz; Duty Cycle: 1:1
Medium: HSL2450 Medium parameters used: f = 2462 MHz; σ = 1.83 mho/m; ε_r = 38.3; ρ = 1000 kg/m^3
Phantom section: Right Section
DASY4 Configuration:
- Probe: ET3DV6 - SN1559; ConvF(4.38, 4.38, 4.38); Calibrated: 19.01.2011
- Sensor-Surface: 4mm (Mechanical And Optical Surface Detection)
- Electronics: DAE3 Sn477; Calibrated: 04.05.2011
- Phantom: SAM left; Type: SAM; Serial: 1041
- Measurement SW: DASY4, V4.7 Build 71; Postprocessing SW: SEMCAD, V1.8 Build 146

Touch position - High 6MBit/s/Area Scan (51x91x1): Measurement grid: dx=15mm, dy=15mm

Maximum value of SAR (interpolated) = 0.777 mW/g

Touch position - High 6MBit/s/Zoom Scan (7x7x7) (7x7x7)/Cube 0:

Measurement grid: dx=5mm, dy=5mm, dz=5mm
Reference Value = 17.9 V/m; Power Drift = -0.00 dB
Peak SAR (extrapolated) = 1.40 W/kg
SAR(1 g) = 0.628 mW/g; SAR(10 g) = 0.290 mW/g
Maximum value of SAR (measured) = 0.707 mW/g

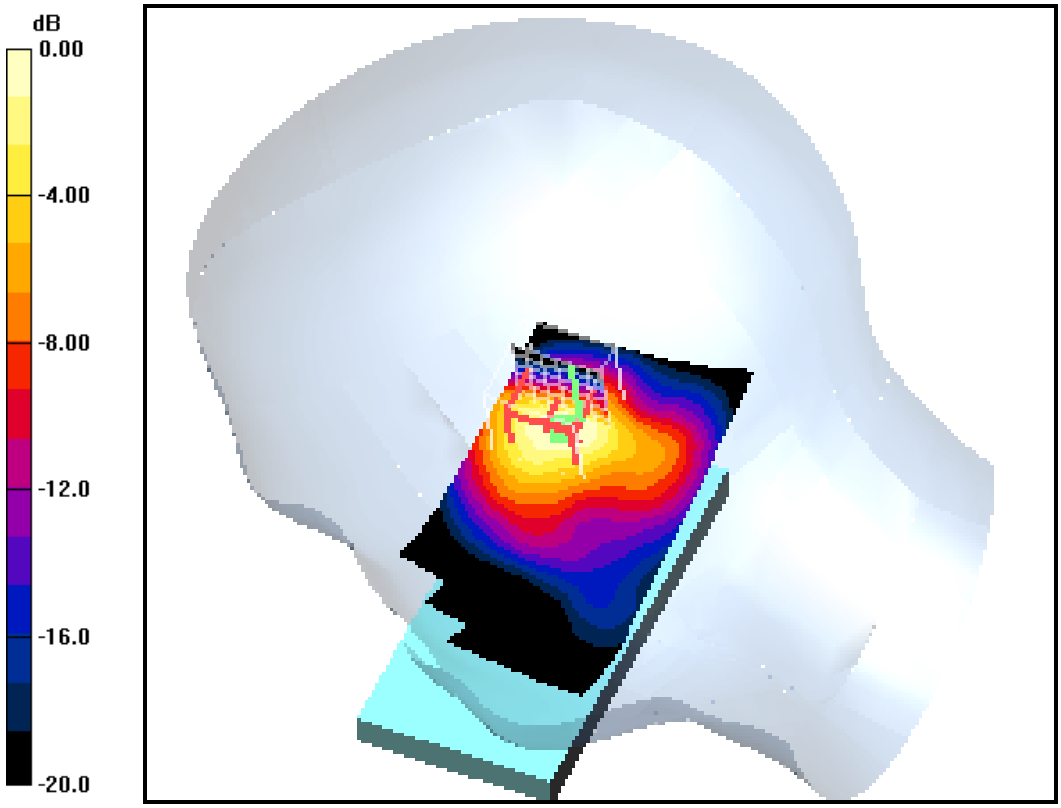

0 dB = 0.707mW/g

Additional information:
ambient temperature: 22.4°C; liquid temperature: 20.7°C

Date/Time: 30.11.2011 20:11:18Date/Time: 30.11.2011 20:19:03

IEEE1528_OET65-RightHandSide-WLAN

DUT: Sony Ericsson; Type: AAD-3880136-BV; Serial: CB511VCBXB
Communication System: WLAN 2450 US; Frequency: 2462 MHz; Duty Cycle: 1:1
Medium: HSL2450 Medium parameters used: f = 2462 MHz; σ = 1.83 mho/m; ε_r = 38.3; ρ = 1000 kg/m^3
Phantom section: Right Section
DASY4 Configuration:
- Probe: ET3DV6 - SN1559; ConvF(4.38, 4.38, 4.38); Calibrated: 19.01.2011
- Sensor-Surface: 4mm (Mechanical And Optical Surface Detection)
- Electronics: DAE3 Sn477; Calibrated: 04.05.2011
- Phantom: SAM left; Type: SAM; Serial: 1041
- Measurement SW: DASY4, V4.7 Build 71; Postprocessing SW: SEMCAD, V1.8 Build 146

Touch position - High 6.5Mbps /Area Scan (51x81x1): Measurement grid: dx=15mm, dy=15mm

Maximum value of SAR (interpolated) = 0.594 mW/g

Touch position - High 6.5Mbps/Zoom Scan (7x7x7) (7x7x7)/Cube 0:

Measurement grid: dx=5mm, dy=5mm, dz=5mm
Reference Value = 16.8 V/m; Power Drift = 0.039 dB
Peak SAR (extrapolated) = 1.22 W/kg
SAR(1 g) = 0.558 mW/g; SAR(10 g) = 0.260 mW/g
Maximum value of SAR (measured) = 0.626 mW/g

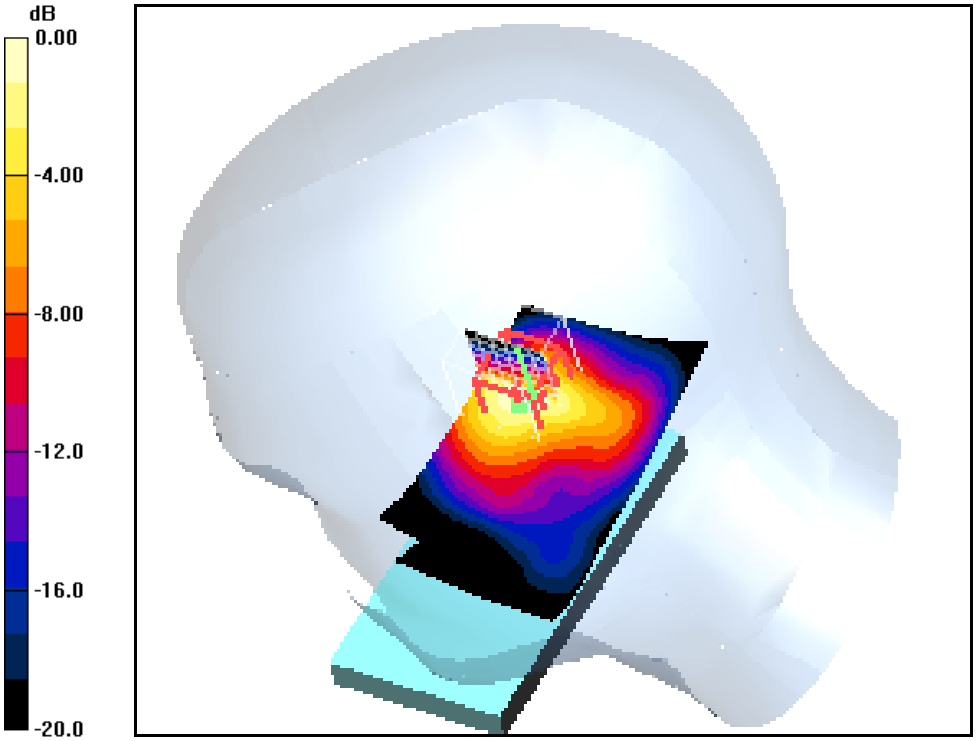

0 dB = 0.626mW/g

Additional information:
ambient temperature: 22.4°C; liquid temperature: 20.7°C

Annex B.8: WLAN 2450MHz body

Date/Time: 05.12.2011 12:05:03Date/Time: 05.12.2011 12:13:38

IEEE1528_OET65-Body-WLAN

DUT: Sony Ericsson; Type: AAD-3880136-BV; Serial: CB511VCBXB
Communication System: WLAN 2450 US; Frequency: 2412 MHz; Duty Cycle: 1:1
Medium: M2450 Medium parameters used: f = 2412 MHz; σ = 1.92 mho/m; ε_r = 51.8; ρ = 1000 kg/m^3
Phantom section: Flat Section
DASY4 Configuration:
- Probe: ET3DV6 - SN1559; ConvF(3.91, 3.91, 3.91); Calibrated: 19.01.2011
- Sensor-Surface: 4mm (Mechanical And Optical Surface Detection)
- Electronics: DAE3 Sn477; Calibrated: 04.05.2011
- Phantom: SAM left; Type: SAM; Serial: 1041
- Measurement SW: DASY4, V4.7 Build 71; Postprocessing SW: SEMCAD, V1.8 Build 146

Front position - Low/Area Scan (61x91x1): Measurement grid: dx=15mm, dy=15mm

Maximum value of SAR (interpolated) = 0.063 mW/g

Front position - Low/Zoom Scan (7x7x7) (12x7x7)/Cube 0: Measurement grid: dx=5mm, dy=5mm, dz=5mm

Reference Value = 6.10 V/m; Power Drift = 0.013 dB
Peak SAR (extrapolated) = 0.095 W/kg
SAR(1 g) = 0.057 mW/g; SAR(10 g) = 0.033 mW/g
Maximum value of SAR (measured) = 0.062 mW/g

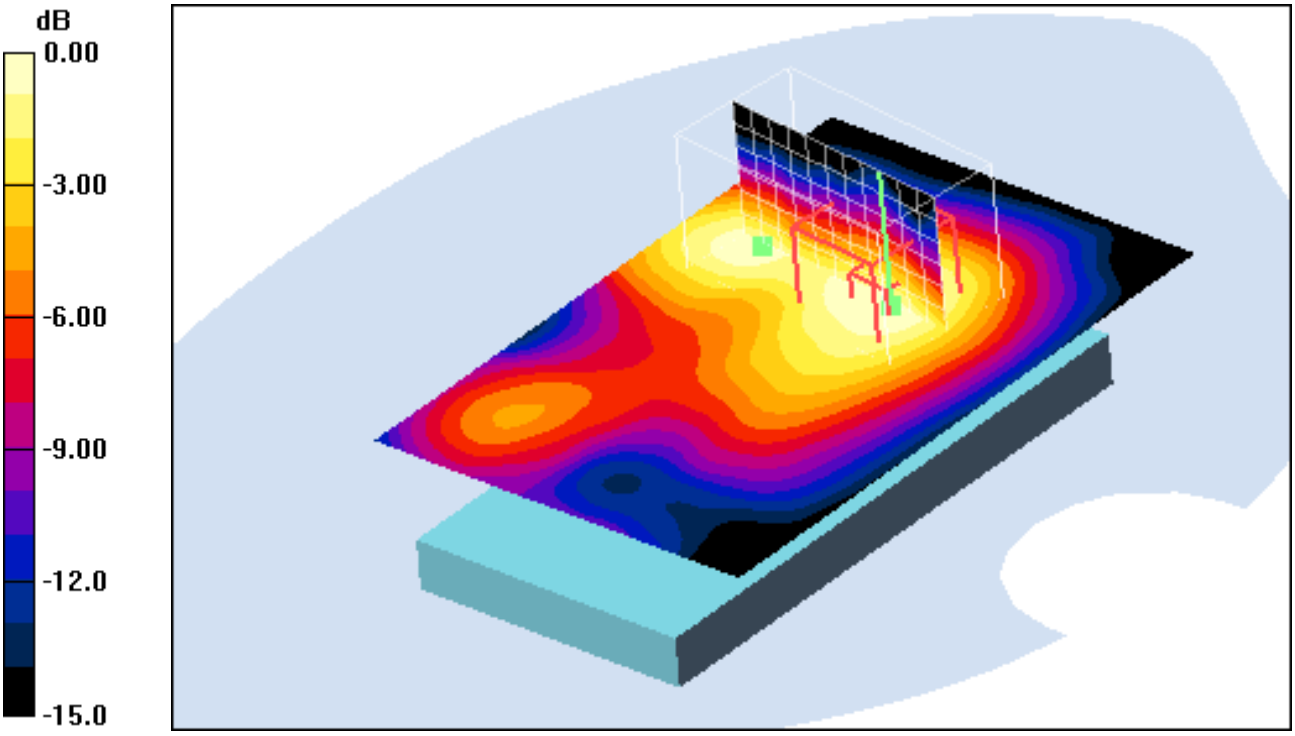

0 dB = 0.062mW/g

Additional information:
position or distance of DUT to SAM: 10 mm
ambient temperature: 21.3°C; liquid temperature: 20.3°C

Date/Time: 05.12.2011 09:43:38Date/Time: 05.12.2011 09:57:19

IEEE1528_OET65-Body-WLAN

DUT: Sony Ericsson; Type: AAD-3880136-BV; Serial: CB511VCBXB
Communication System: WLAN 2450 US; Frequency: 2437 MHz; Duty Cycle: 1:1
Medium: M2450 Medium parameters used: f = 2437 MHz; σ = 1.97 mho/m; ε_r = 51.7; ρ = 1000 kg/m^3
Phantom section: Flat Section
DASY4 Configuration:
- Probe: ET3DV6 - SN1559; ConvF(3.91, 3.91, 3.91); Calibrated: 19.01.2011
- Sensor-Surface: 4mm (Mechanical And Optical Surface Detection)
- Electronics: DAE3 Sn477; Calibrated: 04.05.2011
- Phantom: SAM left; Type: SAM; Serial: 1041
- Measurement SW: DASY4, V4.7 Build 71; Postprocessing SW: SEMCAD, V1.8 Build 146

Front position - Middle/Area Scan (61x91x1): Measurement grid: dx=15mm, dy=15mm

Maximum value of SAR (interpolated) = 0.063 mW/g

Front position - Middle/Zoom Scan (7x7x7) (12x7x7)/Cube 0: Measurement grid: dx=5mm, dy=5mm, dz=5mm

Reference Value = 5.97 V/m; Power Drift = -0.077 dB
Peak SAR (extrapolated) = 0.097 W/kg
SAR(1 g) = 0.056 mW/g; SAR(10 g) = 0.033 mW/g
Maximum value of SAR (measured) = 0.061 mW/g

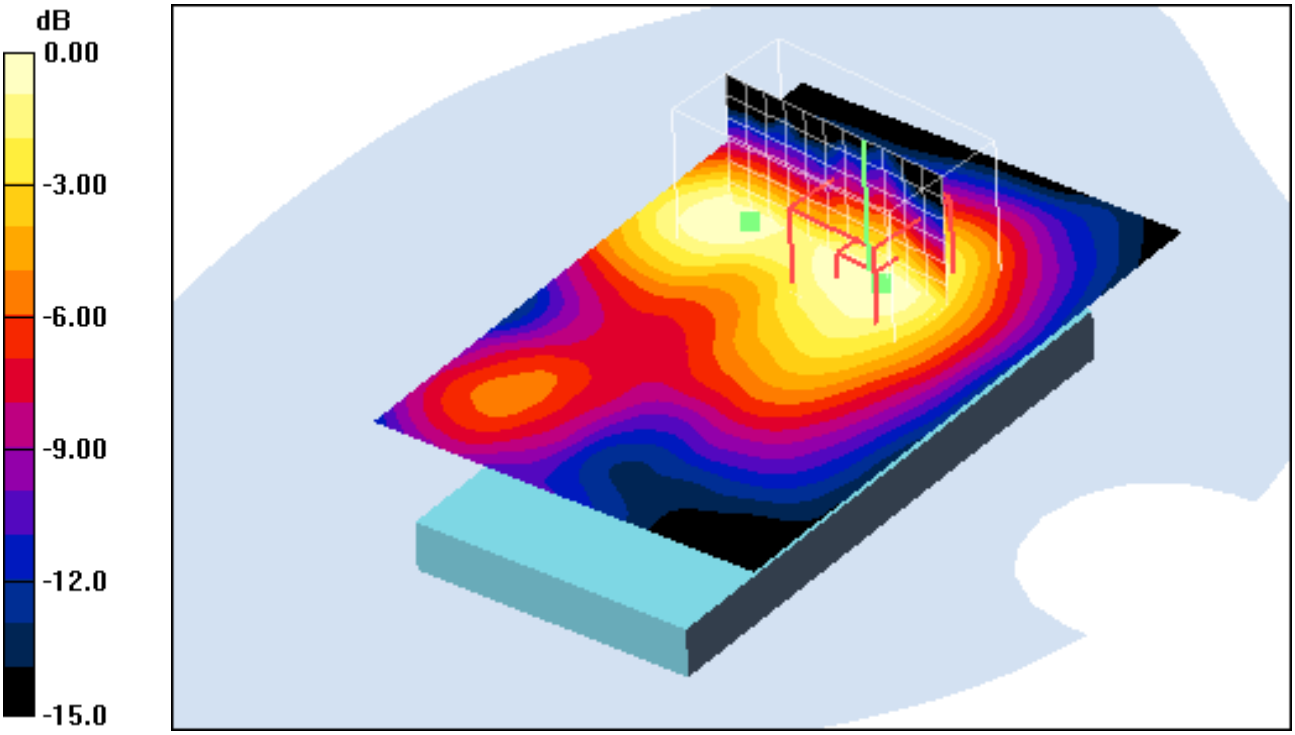

0 dB = 0.061mW/g

Additional information:
position or distance of DUT to SAM: 10 mm
ambient temperature: 21.3°C; liquid temperature: 20.3°C

Date/Time: 05.12.2011 17:01:08Date/Time: 05.12.2011 17:09:21

IEEE1528_OET65-Body-WLAN

DUT: Sony Ericsson; Type: AAD-3880136-BV; Serial: CB511VCBXB
Communication System: WLAN 2450 US; Frequency: 2462 MHz; Duty Cycle: 1:1
Medium: M2450 Medium parameters used: f = 2462 MHz; σ = 1.99 mho/m; ε_r = 51.7; ρ = 1000 kg/m^3
Phantom section: Flat Section
DASY4 Configuration:
- Probe: ET3DV6 - SN1559; ConvF(3.91, 3.91, 3.91); Calibrated: 19.01.2011
- Sensor-Surface: 4mm (Mechanical And Optical Surface Detection)Sensor-Surface: 4mm (Mechanical Surface Detection)
- Electronics: DAE3 Sn477; Calibrated: 04.05.2011
- Phantom: SAM left; Type: SAM; Serial: 1041
- Measurement SW: DASY4, V4.7 Build 71; Postprocessing SW: SEMCAD, V1.8 Build 146

Front position - High/Area Scan (61x91x1): Measurement grid: dx=15mm, dy=15mm

Maximum value of SAR (interpolated) = 0.087 mW/g

Front position - High/Zoom Scan (7x7x7) (12x7x7)/Cube 0: Measurement grid: dx=5mm, dy=5mm, dz=5mm

Reference Value = 7.01 V/m; Power Drift = -0.040 dB
Peak SAR (extrapolated) = 0.136 W/kg
SAR(1 g) = 0.077 mW/g; SAR(10 g) = 0.044 mW/g
Maximum value of SAR (measured) = 0.084 mW/g

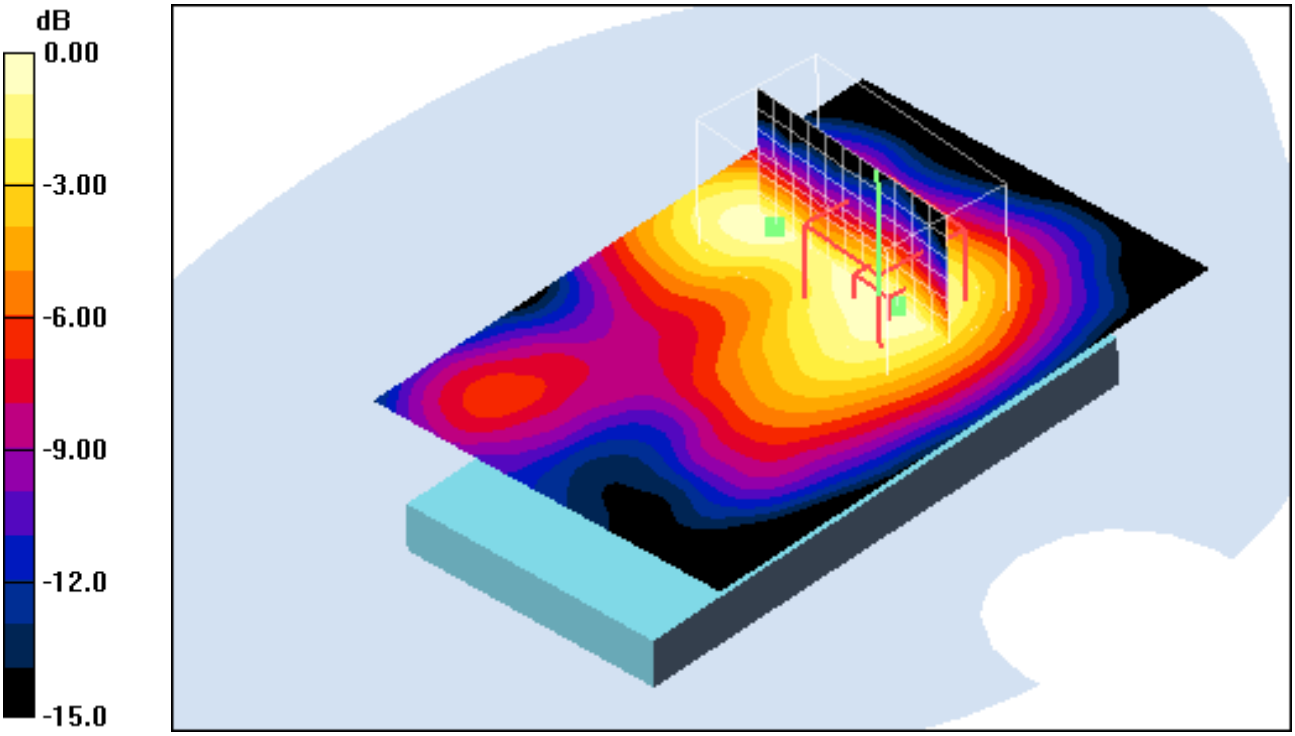

0 dB = 0.084mW/g

Additional information:
position or distance of DUT to SAM: 10 mm
ambient temperature: 21.3°C; liquid temperature: 20.3°C

Date/Time: 05.12.2011 12:49:37Date/Time: 05.12.2011 12:58:26

IEEE1528_OET65-Body-WLAN

DUT: Sony Ericsson; Type: AAD-3880136-BV; Serial: CB511VCBXB
Communication System: WLAN 2450 US; Frequency: 2412 MHz; Duty Cycle: 1:1
Medium: M2450 Medium parameters used: f = 2412 MHz; σ = 1.92 mho/m; ε_r = 51.8; ρ = 1000 kg/m^3
Phantom section: Flat Section
DASY4 Configuration:
- Probe: ET3DV6 - SN1559; ConvF(3.91, 3.91, 3.91); Calibrated: 19.01.2011
- Sensor-Surface: 4mm (Mechanical And Optical Surface Detection)
- Electronics: DAE3 Sn477; Calibrated: 04.05.2011
- Phantom: SAM left; Type: SAM; Serial: 1041
- Measurement SW: DASY4, V4.7 Build 71; Postprocessing SW: SEMCAD, V1.8 Build 146

Rear position - Low/Area Scan (61x91x1): Measurement grid: dx=15mm, dy=15mm

Maximum value of SAR (interpolated) = 0.065 mW/g

Rear position - Low/Zoom Scan (7x7x7) (7x7x7)/Cube 0: Measurement grid: dx=5mm, dy=5mm, dz=5mm

Reference Value = 5.94 V/m; Power Drift = -0.017 dB
Peak SAR (extrapolated) = 0.105 W/kg
SAR(1 g) = 0.051 mW/g; SAR(10 g) = 0.022 mW/g
Maximum value of SAR (measured) = 0.060 mW/g

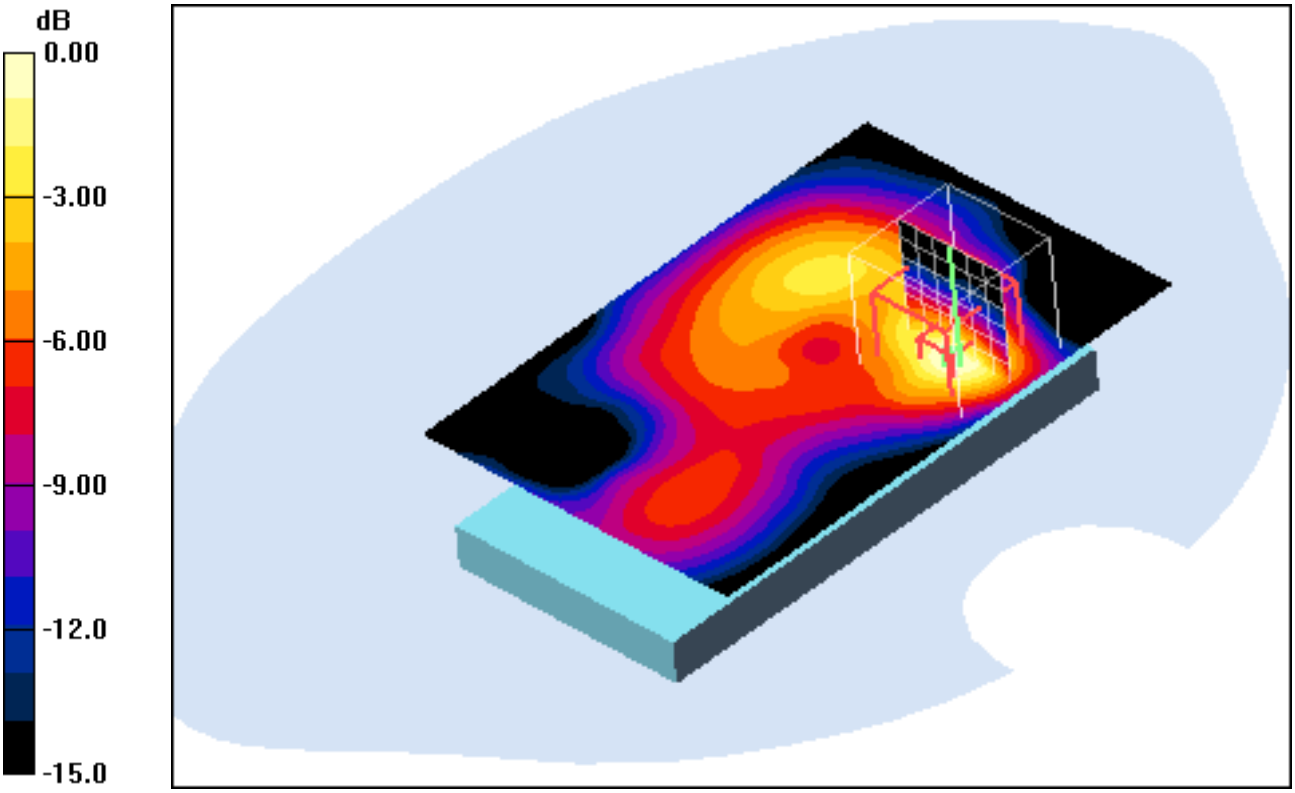

0 dB = 0.060mW/g

Additional information:
position or distance of DUT to SAM: 10 mm
ambient temperature: 21.3°C; liquid temperature: 20.3°C

Date/Time: 05.12.2011 10:21:03Date/Time: 05.12.2011 10:29:49

IEEE1528_OET65-Body-WLAN

DUT: Sony Ericsson; Type: AAD-3880136-BV; Serial: CB511VCBXB
Communication System: WLAN 2450 US; Frequency: 2437 MHz; Duty Cycle: 1:1
Medium: M2450 Medium parameters used: f = 2437 MHz; σ = 1.97 mho/m; ε_r = 51.7; ρ = 1000 kg/m^3
Phantom section: Flat Section
DASY4 Configuration:
- Probe: ET3DV6 - SN1559; ConvF(3.91, 3.91, 3.91); Calibrated: 19.01.2011
- Sensor-Surface: 4mm (Mechanical And Optical Surface Detection)
- Electronics: DAE3 Sn477; Calibrated: 04.05.2011
- Phantom: SAM left; Type: SAM; Serial: 1041
- Measurement SW: DASY4, V4.7 Build 71; Postprocessing SW: SEMCAD, V1.8 Build 146

Rear position - Middle/Area Scan (61x91x1): Measurement grid: dx=15mm, dy=15mm

Maximum value of SAR (interpolated) = 0.057 mW/g

Rear position - Middle/Zoom Scan (7x7x7) (7x7x7)/Cube 0: Measurement grid: dx=5mm, dy=5mm, dz=5mm

Reference Value = 5.45 V/m; Power Drift = -0.013 dB
Peak SAR (extrapolated) = 0.101 W/kg
SAR(1 g) = 0.048 mW/g; SAR(10 g) = 0.021 mW/g
Maximum value of SAR (measured) = 0.056 mW/g

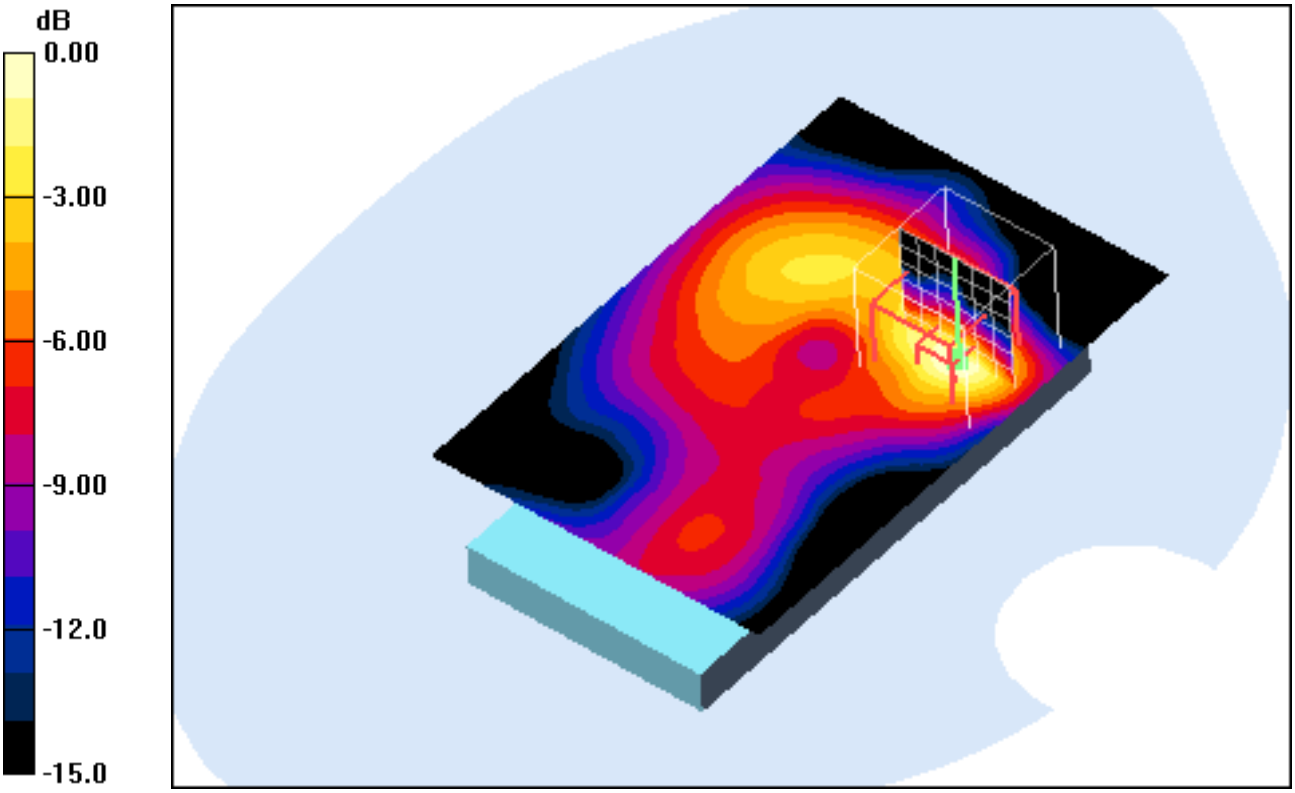

0 dB = 0.056mW/g

Additional information:
position or distance of DUT to SAM: 10 mm
ambient temperature: 21.3°C; liquid temperature: 20.3°C

Date/Time: 06.12.2011 09:14:48Date/Time: 06.12.2011 09:25:40

IEEE1528_OET65-Body-WLAN

DUT: Sony Ericsson; Type: AAD-3880136-BV; Serial: CB511VCBXB
Communication System: WLAN 2450 US; Frequency: 2462 MHz; Duty Cycle: 1:1
Medium: M2450 Medium parameters used: f = 2462 MHz; σ = 1.99 mho/m; ε_r = 51.7; ρ = 1000 kg/m^3
Phantom section: Flat Section
DASY4 Configuration:
- Probe: ET3DV6 - SN1559; ConvF(3.91, 3.91, 3.91); Calibrated: 19.01.2011
- Sensor-Surface: 4mm (Mechanical And Optical Surface Detection)Sensor-Surface: 4mm (Mechanical Surface Detection)
- Electronics: DAE3 Sn477; Calibrated: 04.05.2011
- Phantom: SAM left; Type: SAM; Serial: 1041
- Measurement SW: DASY4, V4.7 Build 71; Postprocessing SW: SEMCAD, V1.8 Build 146

Rear position - High/Area Scan (61x91x1): Measurement grid: dx=15mm, dy=15mm

Maximum value of SAR (interpolated) = 0.091 mW/g

Rear position - High/Zoom Scan (7x7x7) (13x7x7)/Cube 0: Measurement grid: dx=5mm, dy=5mm, dz=5mm

Reference Value = 7.30 V/m; Power Drift = -0.128 dB
Peak SAR (extrapolated) = 0.158 W/kg
SAR(1 g) = 0.077 mW/g; SAR(10 g) = 0.036 mW/g
Maximum value of SAR (measured) = 0.087 mW/g

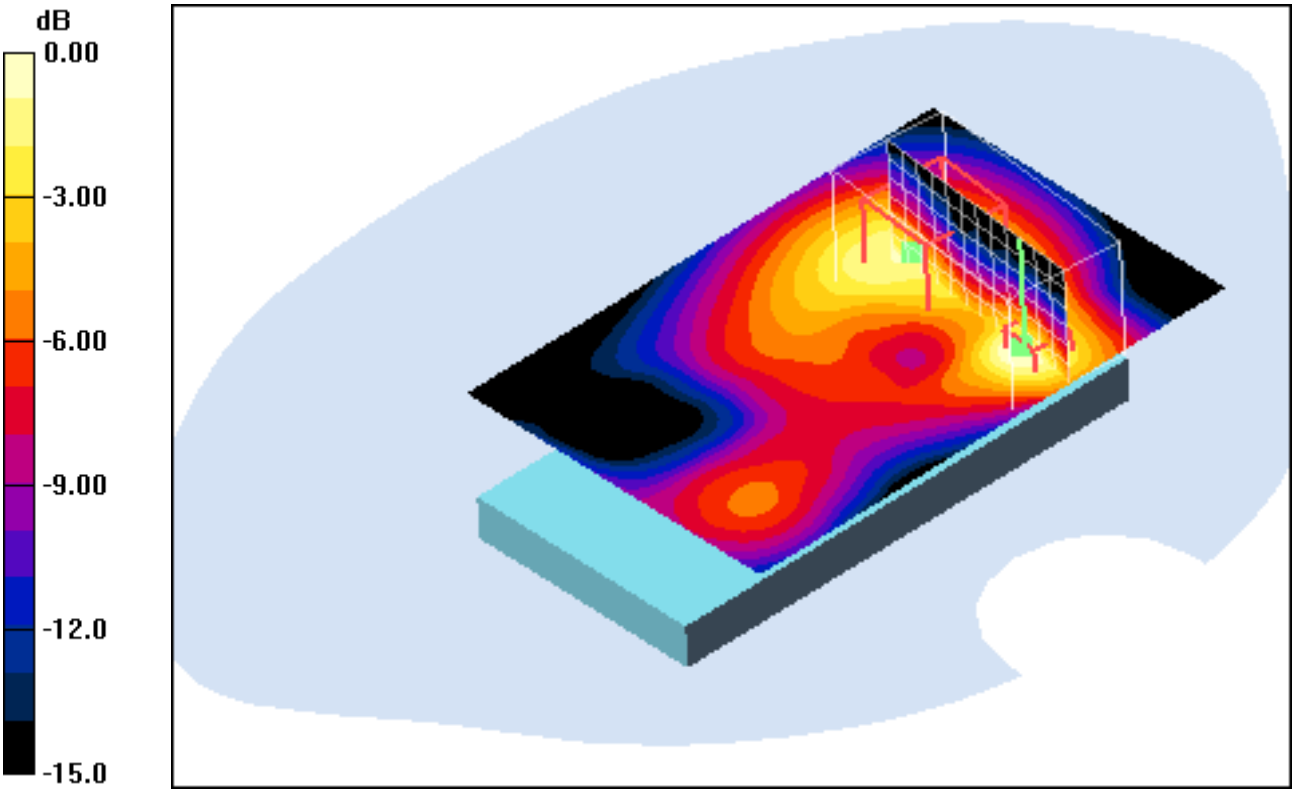

0 dB = 0.087mW/g

Additional information:
position or distance of DUT to SAM: 10 mm
ambient temperature: 21.3°C; liquid temperature: 20.3°C

Date/Time: 05.12.2011 10:45:27Date/Time: 05.12.2011 10:52:42

IEEE1528_OET65-Body-WLAN

DUT: Sony Ericsson; Type: AAD-3880136-BV; Serial: CB511VCBXB
Communication System: WLAN 2450 US; Frequency: 2437 MHz; Duty Cycle: 1:1
Medium: M2450 Medium parameters used: f = 2437 MHz; σ = 1.97 mho/m; ε_r = 51.7; ρ = 1000 kg/m^3
Phantom section: Flat Section
DASY4 Configuration:
- Probe: ET3DV6 - SN1559; ConvF(3.91, 3.91, 3.91); Calibrated: 19.01.2011
- Sensor-Surface: 4mm (Mechanical And Optical Surface Detection)
- Electronics: DAE3 Sn477; Calibrated: 04.05.2011
- Phantom: SAM left; Type: SAM; Serial: 1041
- Measurement SW: DASY4, V4.7 Build 71; Postprocessing SW: SEMCAD, V1.8 Build 146

Edge left position - Middle/Area Scan (51x91x1): Measurement grid: dx=15mm, dy=15mm

Maximum value of SAR (interpolated) = 0.049 mW/g

Edge left position - Middle/Zoom Scan (7x7x7) (7x7x7)/Cube 0: Measurement grid: dx=5mm, dy=5mm, dz=5mm

Reference Value = 5.05 V/m; Power Drift = -0.070 dB
Peak SAR (extrapolated) = 0.085 W/kg
SAR(1 g) = 0.045 mW/g; SAR(10 g) = 0.023 mW/g
Maximum value of SAR (measured) = 0.051 mW/g

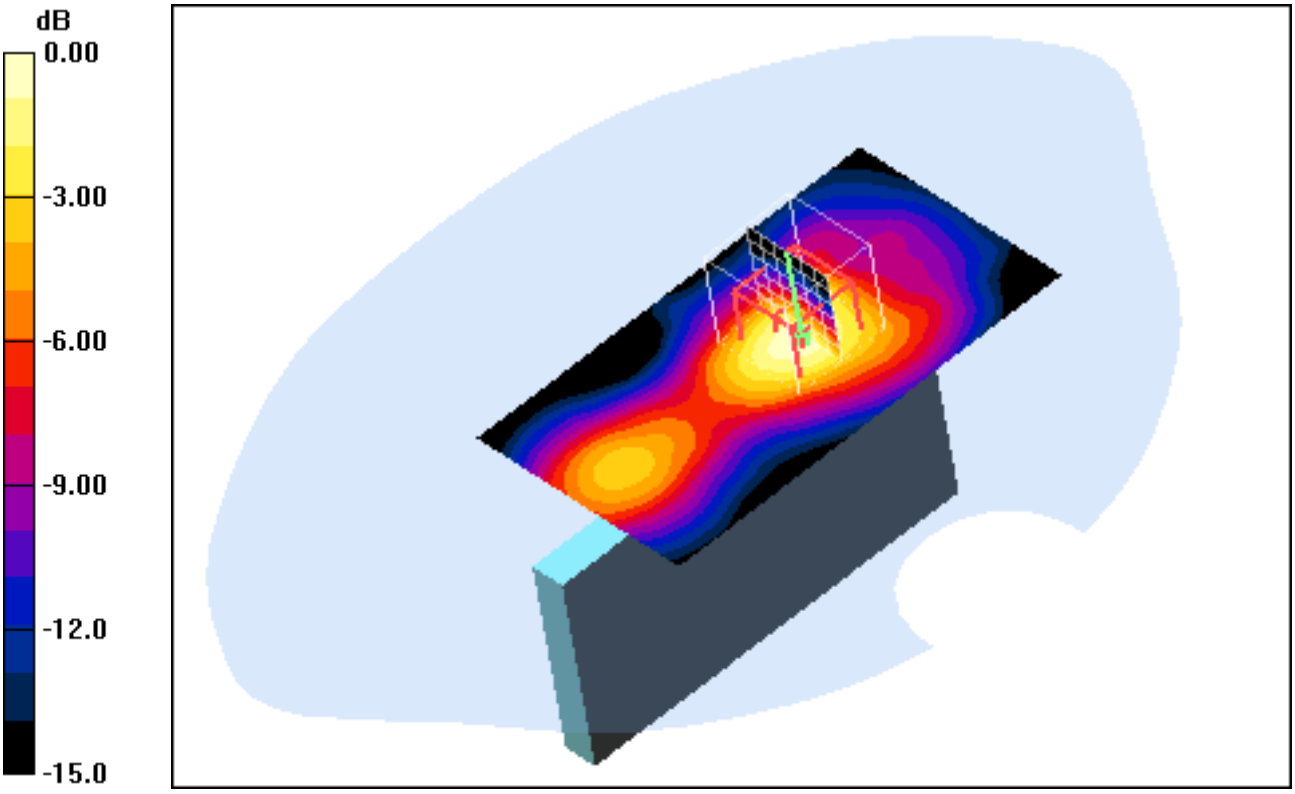

0 dB = 0.051mW/g

Additional information:
position or distance of DUT to SAM: 10 mm
ambient temperature: 21.3°C; liquid temperature: 20.3°C

Date/Time: 05.12.2011 11:11:50Date/Time: 05.12.2011 11:19:01

IEEE1528_OET65-Body-WLAN

DUT: Sony Ericsson; Type: AAD-3880136-BV; Serial: CB511VCBXB
Communication System: WLAN 2450 US; Frequency: 2437 MHz; Duty Cycle: 1:1
Medium: M2450 Medium parameters used: f = 2437 MHz; σ = 1.97 mho/m; ε_r = 51.7; ρ = 1000 kg/m^3
Phantom section: Flat Section
DASY4 Configuration:
- Probe: ET3DV6 - SN1559; ConvF(3.91, 3.91, 3.91); Calibrated: 19.01.2011
- Sensor-Surface: 4mm (Mechanical And Optical Surface Detection)
- Electronics: DAE3 Sn477; Calibrated: 04.05.2011
- Phantom: SAM left; Type: SAM; Serial: 1041
- Measurement SW: DASY4, V4.7 Build 71; Postprocessing SW: SEMCAD, V1.8 Build 146

Edge right position - Middle/Area Scan (51x91x1): Measurement grid: dx=15mm, dy=15mm

Maximum value of SAR (interpolated) = 0.014 mW/g

Edge right position - Middle/Zoom Scan (7x7x7) (7x7x7)/Cube 0: Measurement grid: dx=5mm, dy=5mm, dz=5mm

Reference Value = 2.78 V/m; Power Drift = 0.084 dB
Peak SAR (extrapolated) = 0.023 W/kg
SAR(1 g) = 0.012 mW/g; SAR(10 g) = 0.00697 mW/g
Maximum value of SAR (measured) = 0.013 mW/g

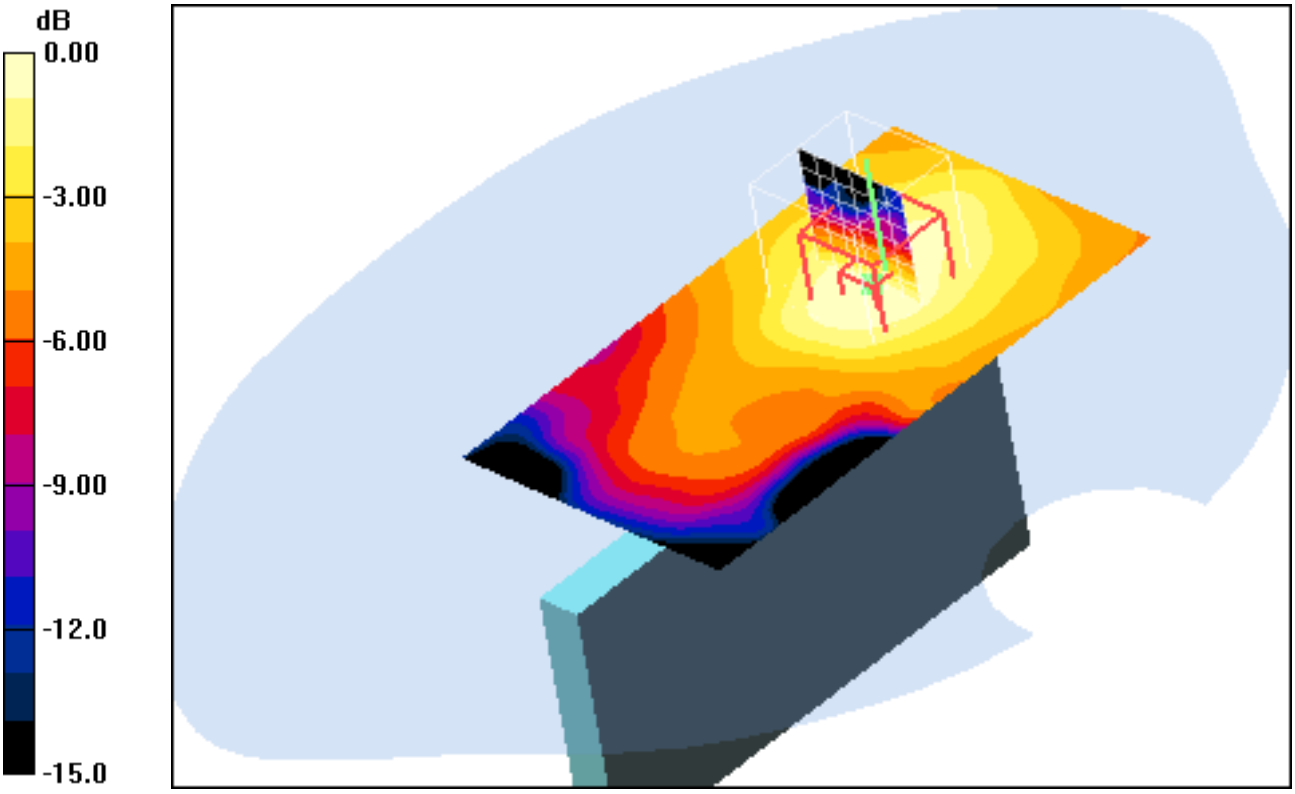

0 dB = 0.013mW/g

Additional information:
position or distance of DUT to SAM: 10 mm
ambient temperature: 21.3°C; liquid temperature: 20.3°C

Date/Time: 05.12.2011 16:36:11Date/Time: 05.12.2011 16:45:11

IEEE1528_OET65-Body-WLAN

DUT: Sony Ericsson; Type: AAD-3880136-BV; Serial: CB511VCBXB
Communication System: WLAN 2450 US; Frequency: 2437 MHz; Duty Cycle: 1:1
Medium: M2450 Medium parameters used: f = 2437 MHz; σ = 1.97 mho/m; ε_r = 51.7; ρ = 1000 kg/m^3
Phantom section: Flat Section
DASY4 Configuration:
- Probe: ET3DV6 - SN1559; ConvF(3.91, 3.91, 3.91); Calibrated: 19.01.2011
- Sensor-Surface: 4mm (Mechanical And Optical Surface Detection)
- Electronics: DAE3 Sn477; Calibrated: 04.05.2011
- Phantom: SAM left; Type: SAM; Serial: 1041
- Measurement SW: DASY4, V4.7 Build 71; Postprocessing SW: SEMCAD, V1.8 Build 146

Edge top position - Middle/Area Scan (61x61x1): Measurement grid: dx=15mm, dy=15mm

Maximum value of SAR (interpolated) = 0.045 mW/g

Edge top position - Middle/Zoom Scan (7x7x7) (7x7x7)/Cube 0: Measurement grid: dx=5mm, dy=5mm, dz=5mm

Reference Value = 5.12 V/m; Power Drift = 0.012 dB
Peak SAR (extrapolated) = 0.068 W/kg
SAR(1 g) = 0.041 mW/g; SAR(10 g) = 0.022 mW/g
Maximum value of SAR (measured) = 0.045 mW/g

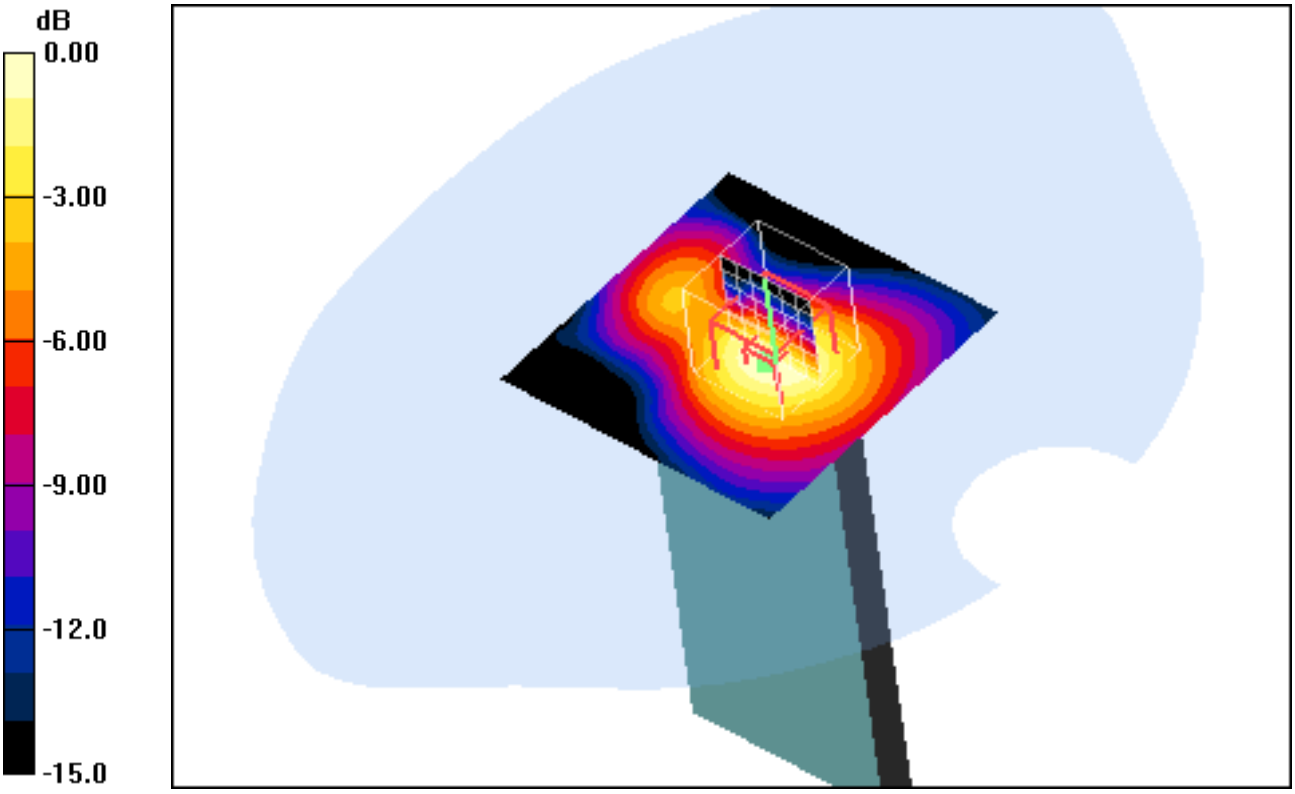

0 dB = 0.045mW/g

Additional information:
position or distance of DUT to SAM: 10 mm
ambient temperature: 21.3°C; liquid temperature: 20.3°C

Date/Time: 06.12.2011 10:58:22Date/Time: 06.12.2011 11:13:19

IEEE1528_OET65-Body-WLAN

DUT: Sony Ericsson; Type: AAD-3880136-BV; Serial: CB511VCBXB
Communication System: WLAN 2450 US; Frequency: 2462 MHz; Duty Cycle: 1:1
Medium: M2450 Medium parameters used: f = 2462 MHz; σ = 1.99 mho/m; ε_r = 51.7; ρ = 1000 kg/m^3
Phantom section: Flat Section
DASY4 Configuration:
- Probe: ET3DV6 - SN1559; ConvF(3.91, 3.91, 3.91); Calibrated: 19.01.2011
- Sensor-Surface: 4mm (Mechanical And Optical Surface Detection)Sensor-Surface: 4mm (Mechanical Surface Detection)
- Electronics: DAE3 Sn477; Calibrated: 04.05.2011
- Phantom: SAM left; Type: SAM; Serial: 1041
- Measurement SW: DASY4, V4.7 Build 71; Postprocessing SW: SEMCAD, V1.8 Build 146

Rear position - High 6Mbps/Area Scan (61x91x1): Measurement grid: dx=15mm, dy=15mm

Maximum value of SAR (interpolated) = 0.056 mW/g

Rear position - High 6Mbps/Zoom Scan (7x7x7) (13x7x7)/Cube 0: Measurement grid: dx=5mm, dy=5mm, dz=5mm

Reference Value = 5.64 V/m; Power Drift = -0.012 dB
Peak SAR (extrapolated) = 0.115 W/kg
SAR(1 g) = 0.057 mW/g; SAR(10 g) = 0.025 mW/g
Maximum value of SAR (measured) = 0.064 mW/g

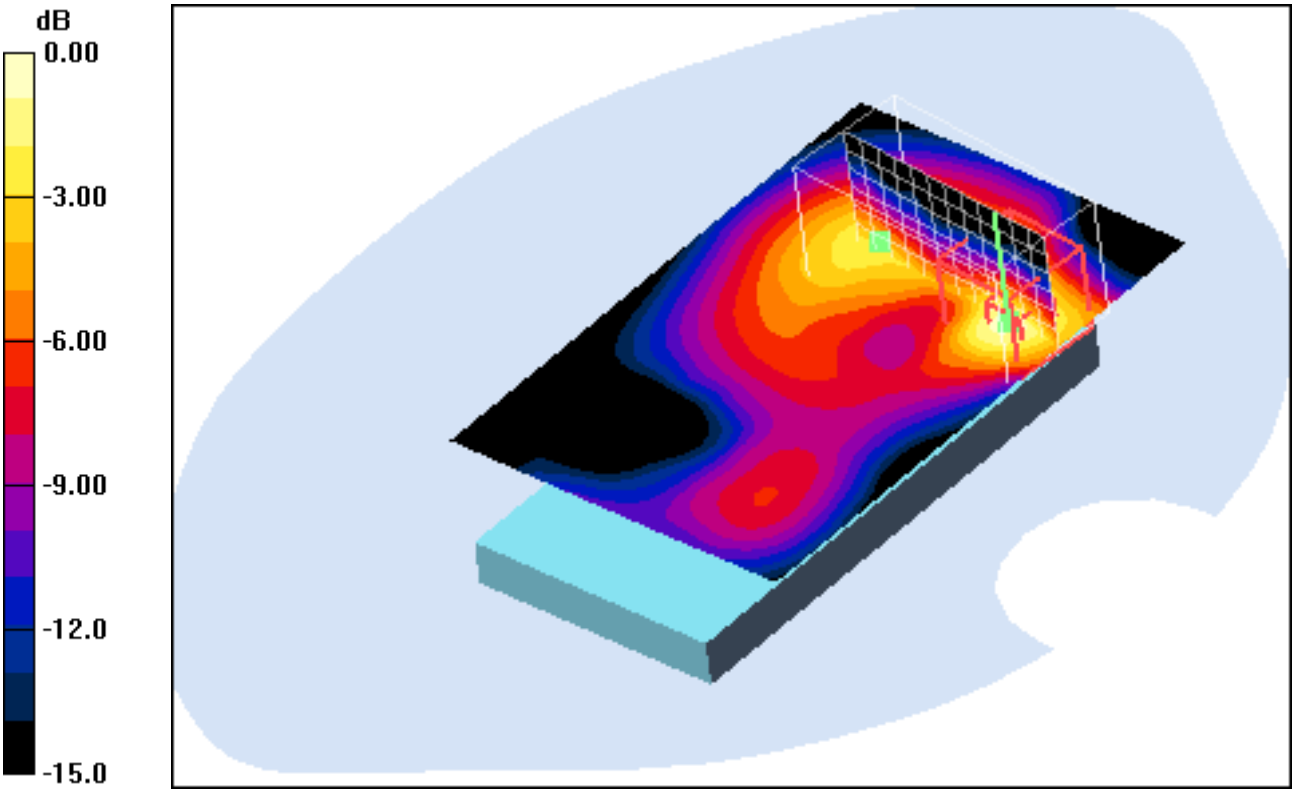

0 dB = 0.064mW/g

Additional information:
position or distance of DUT to SAM: 10 mm
ambient temperature: 21.3°C; liquid temperature: 20.3°C

Date/Time: 06.12.2011 11:45:11Date/Time: 06.12.2011 11:53:47

IEEE1528_OET65-Body-WLAN

DUT: Sony Ericsson; Type: AAD-3880136-BV; Serial: CB511VCBXB
Communication System: WLAN 2450 US; Frequency: 2462 MHz; Duty Cycle: 1:1
Medium: M2450 Medium parameters used: f = 2462 MHz; σ = 1.99 mho/m; ε_r = 51.7; ρ = 1000 kg/m^3
Phantom section: Flat Section
DASY4 Configuration:
- Probe: ET3DV6 - SN1559; ConvF(3.91, 3.91, 3.91); Calibrated: 19.01.2011
- Sensor-Surface: 4mm (Mechanical And Optical Surface Detection)
- Electronics: DAE3 Sn477; Calibrated: 04.05.2011
- Phantom: SAM left; Type: SAM; Serial: 1041
- Measurement SW: DASY4, V4.7 Build 71; Postprocessing SW: SEMCAD, V1.8 Build 146

Rear position - High 6.5Mbps/Area Scan (61x91x1): Measurement grid: dx=15mm, dy=15mm

Maximum value of SAR (interpolated) = 0.053 mW/g

Rear position - High 6.5Mbps/Zoom Scan (7x7x7) (7x7x7)/Cube 0: Measurement grid: dx=5mm, dy=5mm, dz=5mm

Reference Value = 5.61 V/m; Power Drift = -0.01 dB
Peak SAR (extrapolated) = 0.097 W/kg
SAR(1 g) = 0.047 mW/g; SAR(10 g) = 0.021 mW/g
Maximum value of SAR (measured) = 0.052 mW/g

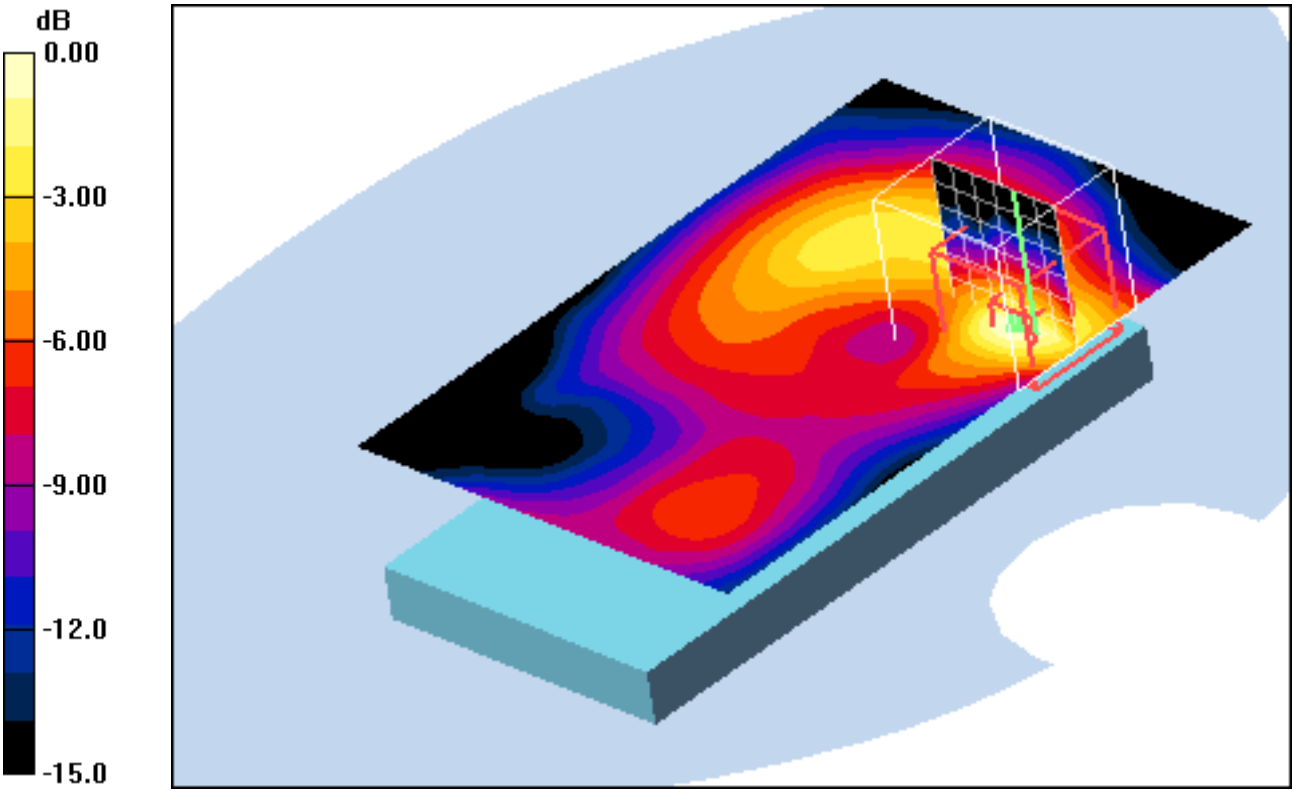

0 dB = 0.052mW/g

Additional information:
position or distance of DUT to SAM: 10 mm
ambient temperature: 21.3°C; liquid temperature: 20.3°C

Annex B.9: Z-axis scan

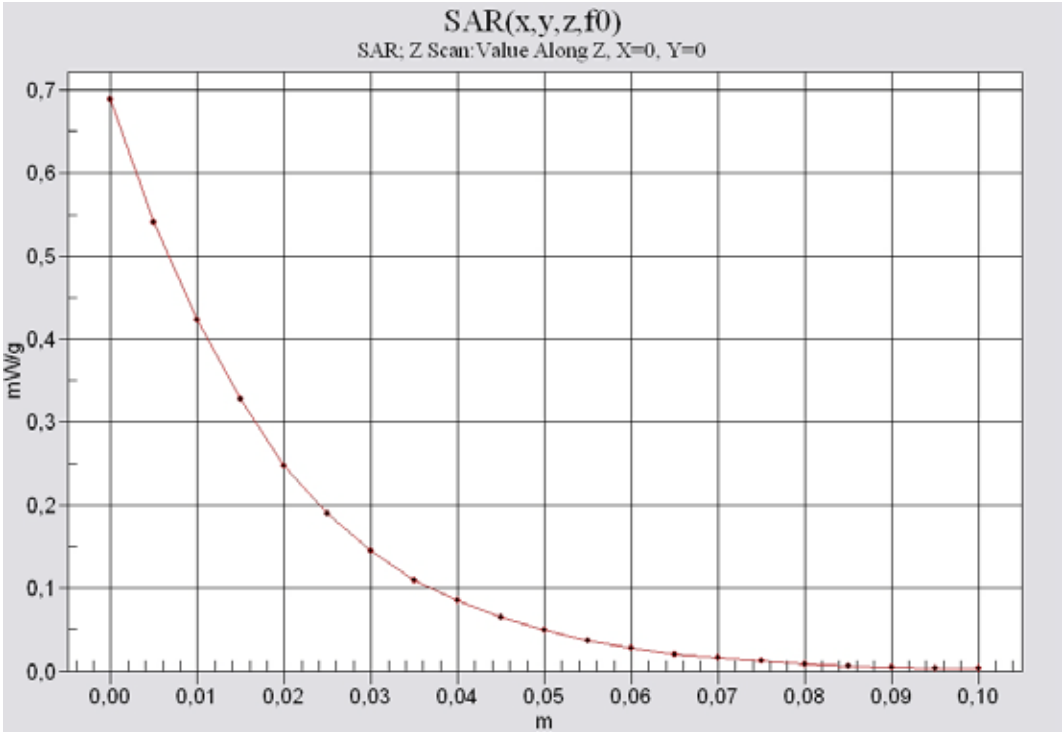

850 head

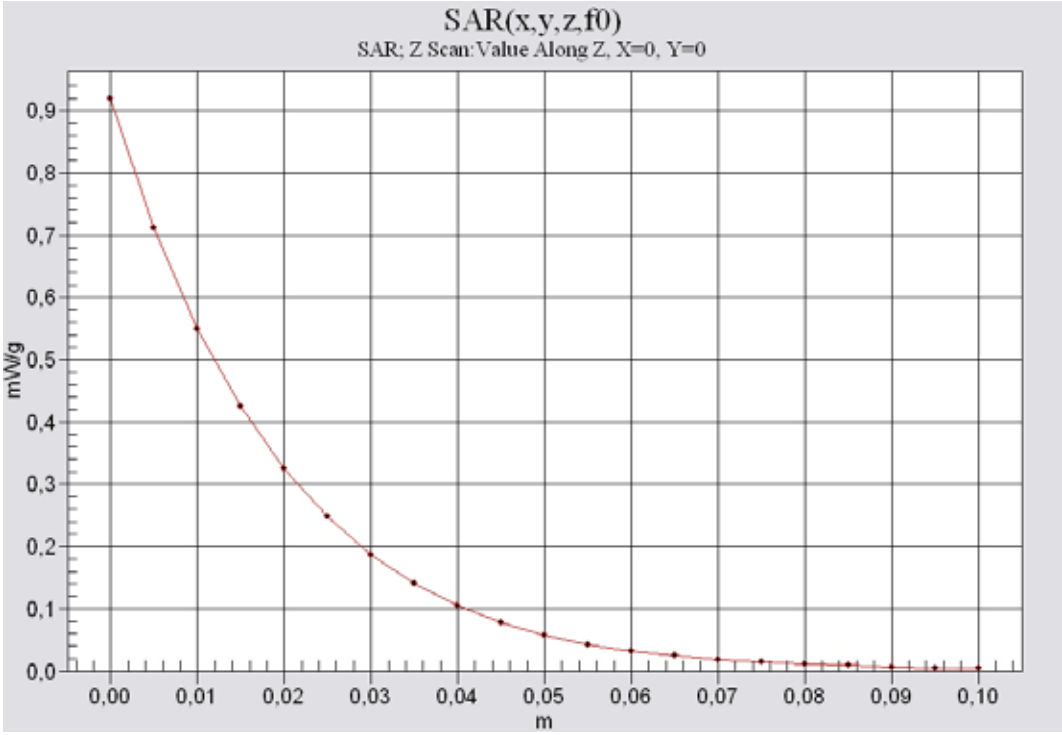

850 body

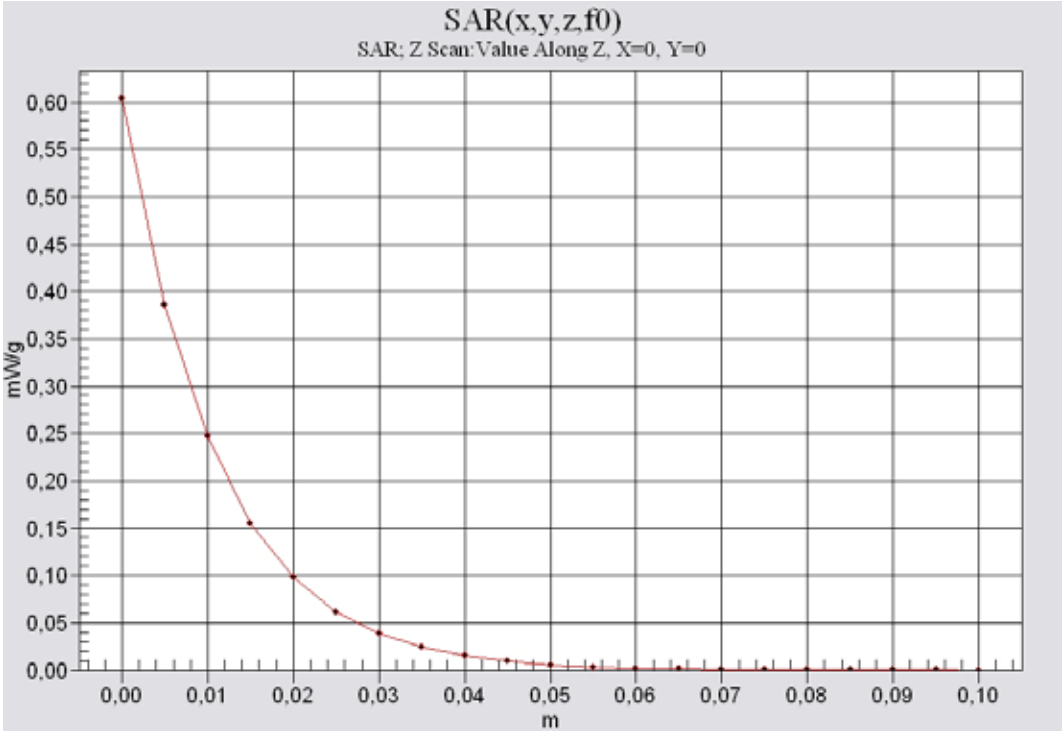

1900 head

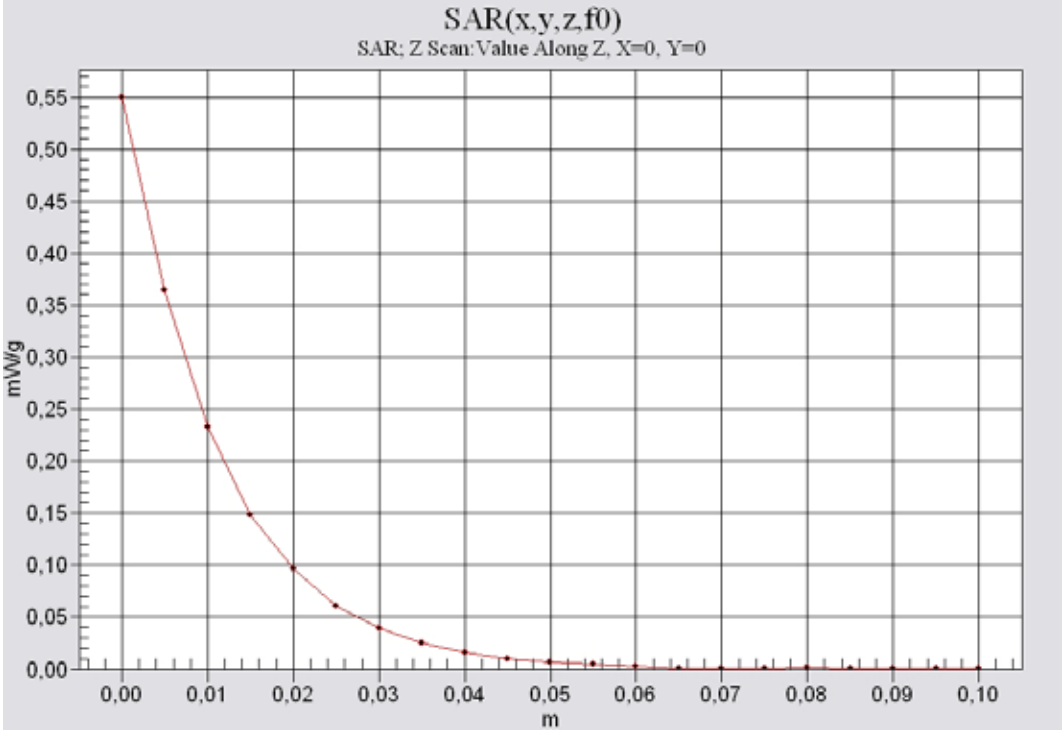

1900 body

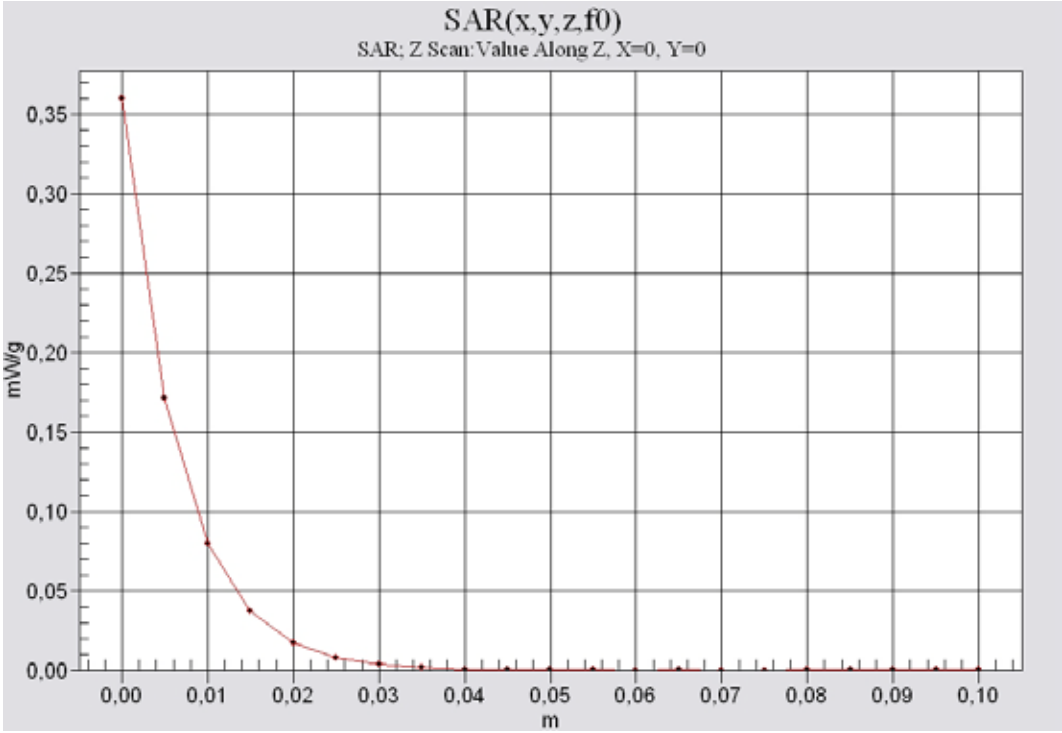

2450 head

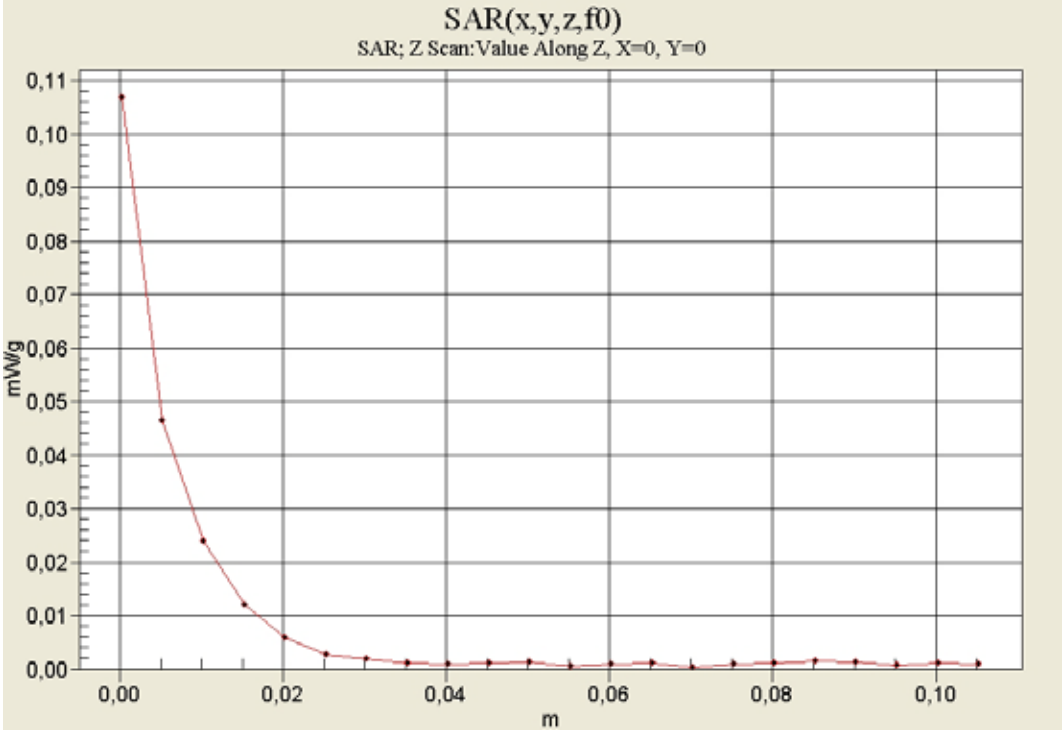

2450 body

Annex B.10: Liquid depth

Photo 1: Liquid depth 850 MHz head simulating liquid

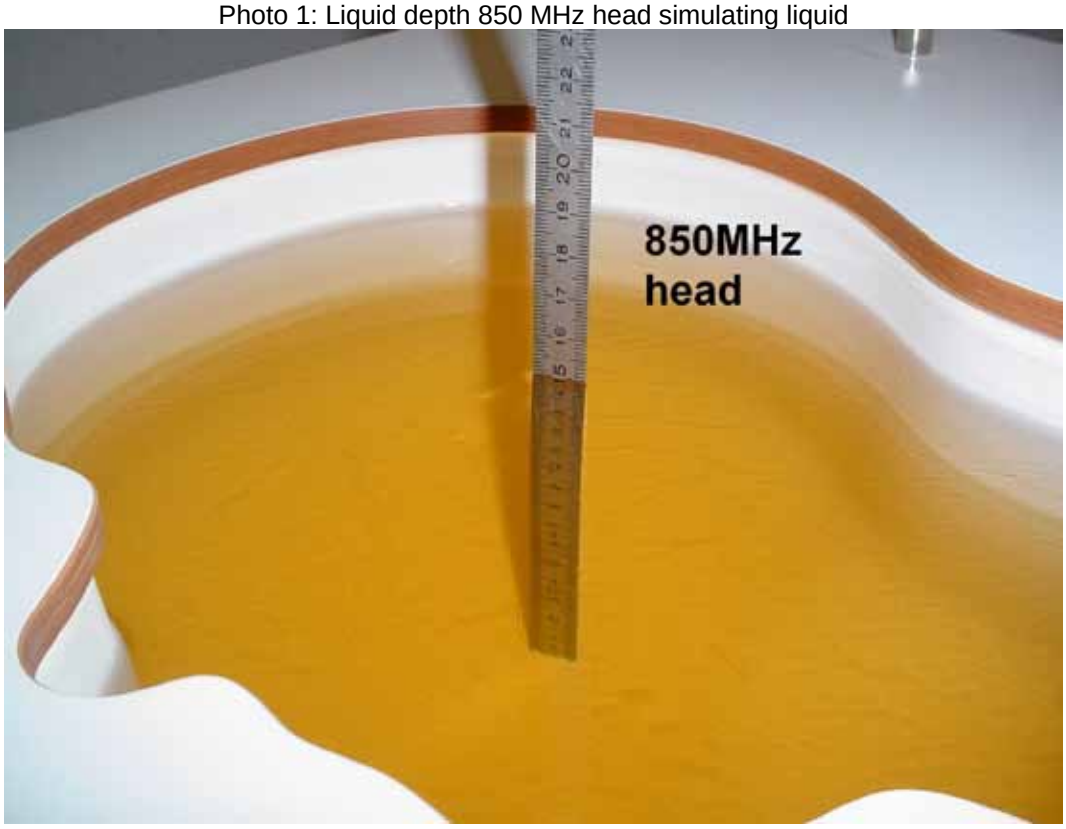

Photo 2: Liquid depth 850 MHz body simulating liquid

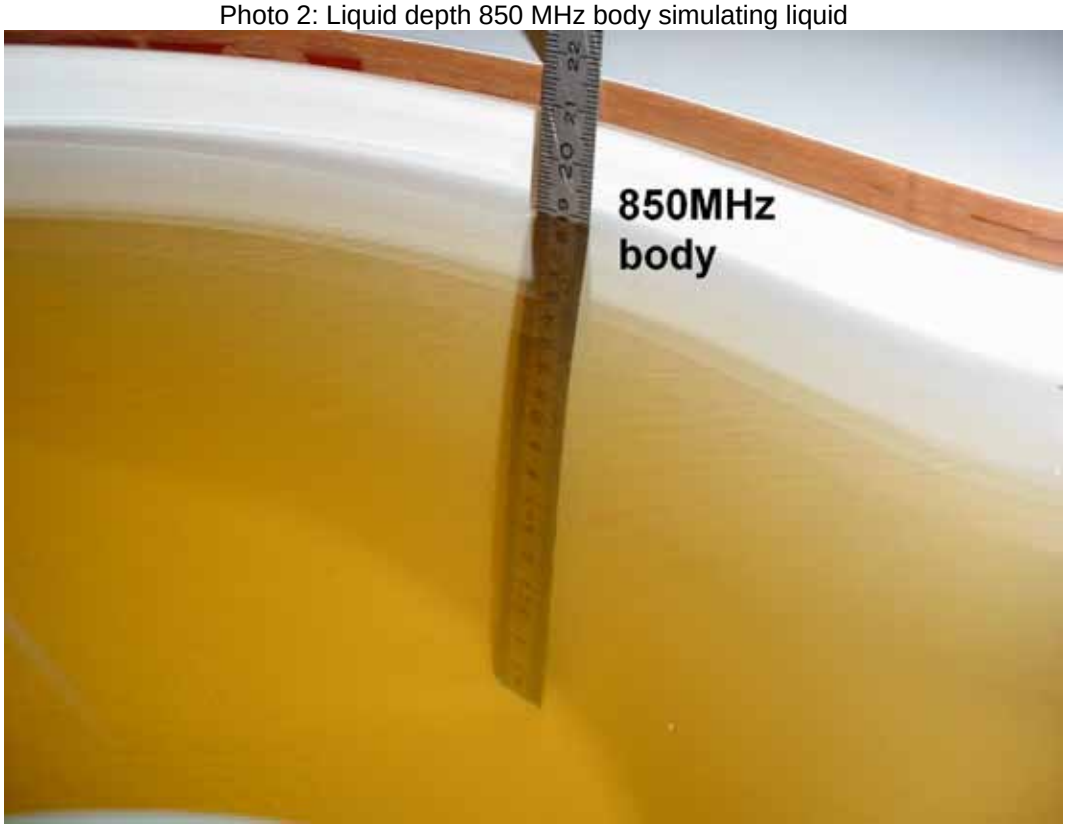

Photo 3: Liquid depth 1900MHz head simulating liquid

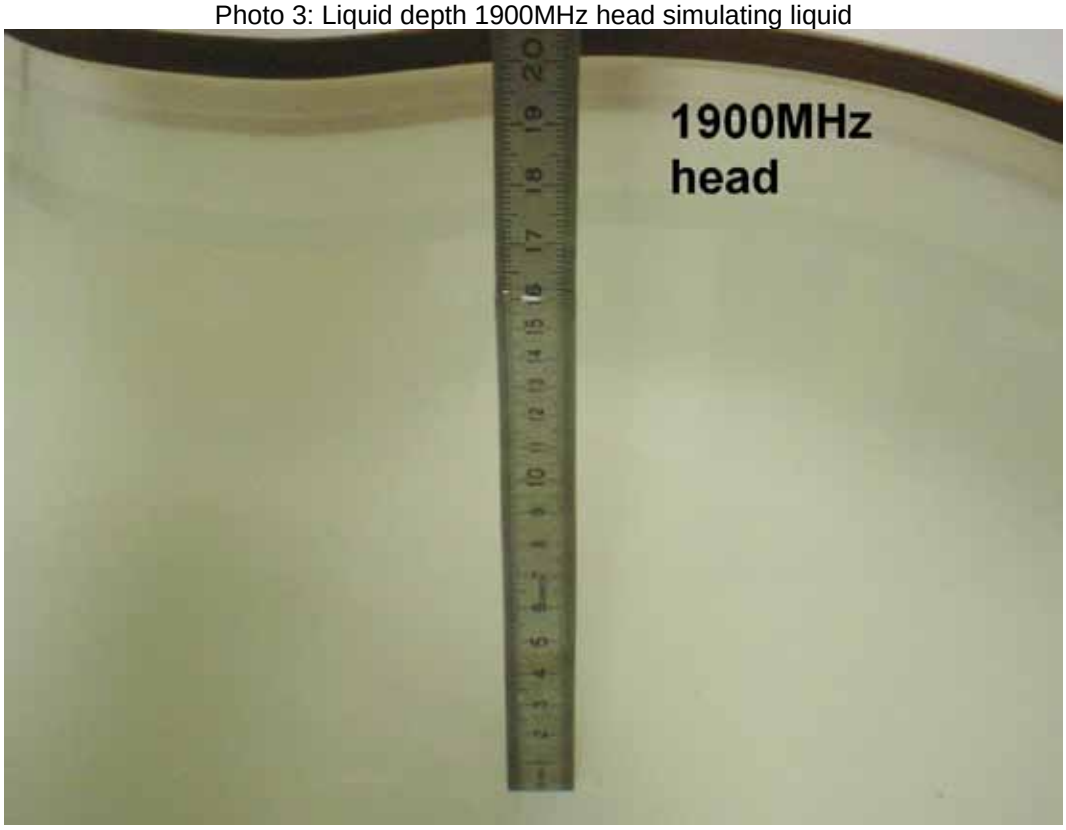

Photo 4: Liquid depth 1900 MHz body simulating liquid

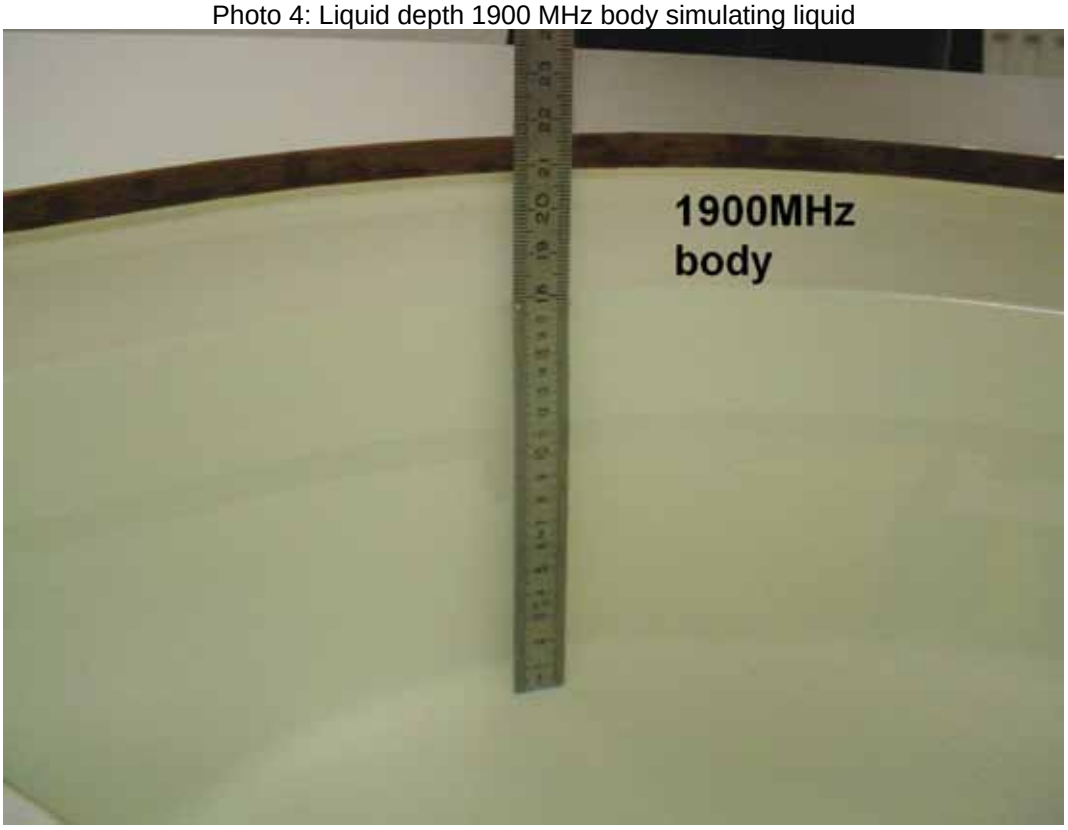

Photo 5: Liquid depth 2450MHz head simulating liquid

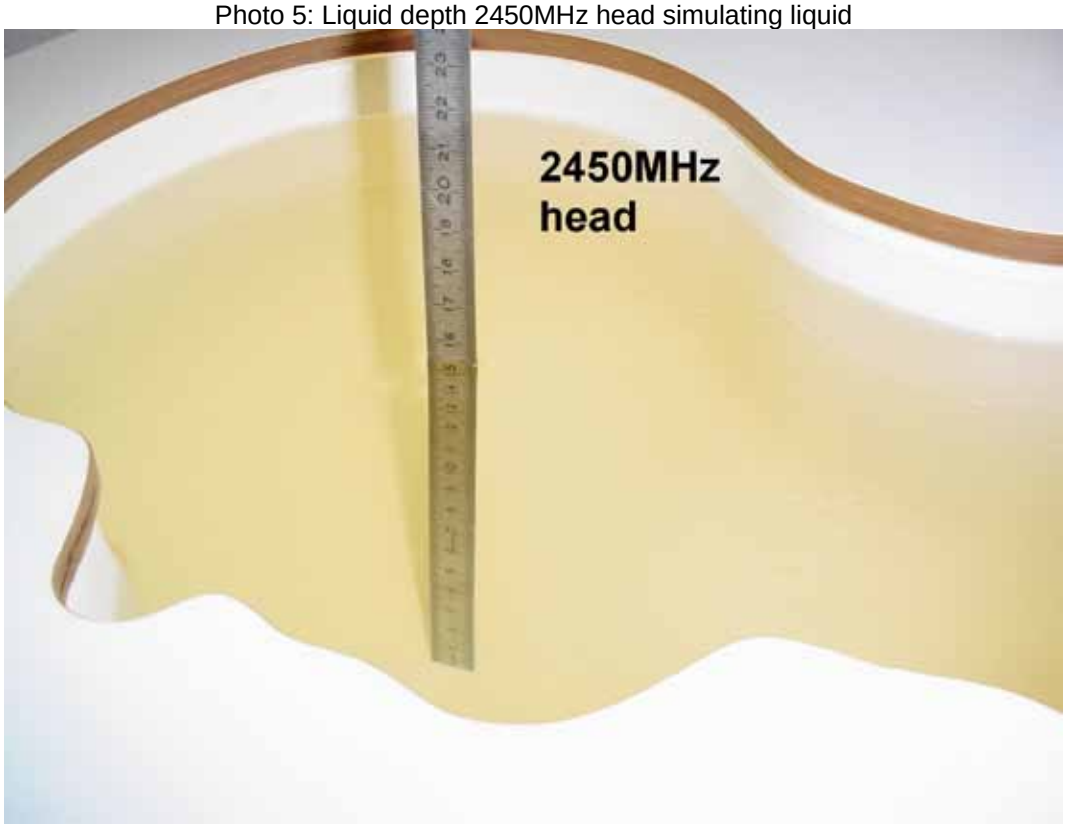

Photo 6: Liquid depth 2450 MHz body simulating liquid

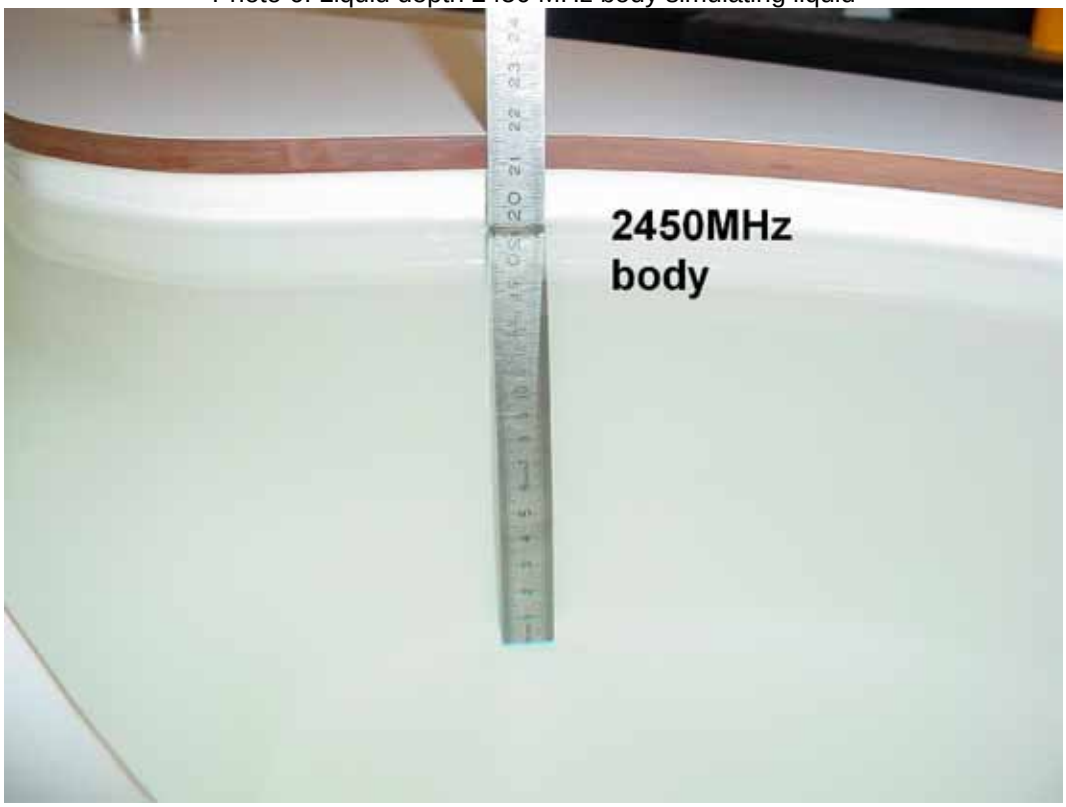

Annex C: Photo documentation

Photo documentation is described in the additional document:

Appendix to test report no. 1-2977/11-100-03 Photo documentation

Annex D: RF Technical Brief Cover Sheet acc. to RSS-102 Annex A

1. COMPANY NUMBER: 4170B

2. MODEL NUMBER: A3880136

3. MANUFACTURER: **Sony Ericsson Mobile Communications AB**

4. TYPE OF EVALUATION:

(a) SAR Evaluation: Device used in the Vicinity of the Human Head
- Multiple transmitters: Yes ☒ No ☐
- Evaluated against exposure limits: General Public Use ☒ Controlled Use ☐
- Duty cycle used in evaluation: 12.5 %
- Standard used for evaluation: RSS-102 Issue 4 (2010-03)
- SAR value: **0.869 W/kg**. Measured ☒ Computed ☐ Calculated ☐

(b) SAR Evaluation: Body-worn Device
- Multiple transmitters: Yes ☒ No ☐
- Evaluated against exposure limits: General Public Use ☒ Controlled Use ☐
- Duty cycle used in evaluation: 100 %
- Standard used for evaluation: RSS-102 Issue 4 (2010-03)
- SAR value: **1.100 W/kg**. Measured ☒ Computed ☐ Calculated ☐

Annex D.11: Declaration of RF Exposure Compliance

ATTESTATION: I attest that the information provided in Annex D: is correct; that a Technical Brief was prepared and the information it contains is correct; that the device evaluation was performed or supervised by me; that applicable measurement methods and evaluation methodologies have been followed and that the device meets the SAR and/or RF exposure limits of RSS-102.

Signature: Thomas Vogler 2011-12-12

NAME : **Thomas Vogler**

TITLE : Dipl.-Ing. (FH)

COMPANY : CETECOM ICT Services GmbH

Annex E: Calibration parameters

Calibration parameters are described in the additional document :

Appendix to test report no. 1-2977/11-100-03
Calibration data, Phantom certificate
and detail information of the DASY4 System

Annex F: Document History

Version	Applied Changes	Date of Release
	Initial Release	2011-12-12

Annex G: Further Information

Glossary

DUT - Device under Test
EUT - Equipment under Test
FCC - Federal Communication Commission
FCC ID - Company Identifier at FCC
HW - Hardware
IC - Industry Canada
Inv. No. - Inventory number
N/A - not applicable
SAR - Specific Absorption Rate
S/N - Serial Number
SW - Software