Date/Time: 06/07/05 14:14:29

Test Laboratory: Sony Ericsson Mobile Communications
File Name: ch661_Right_Tilt_050607_RP.da4

DUT: PY7AD021023; Type: GSM and UMTS; Serial: CB501456SA
Program Name: Mirai GSM1900

Communication System: GSM 1900; Frequency: 1880 MHz;Duty Cycle: 1:8.3
Medium parameters used: f = 1880 MHz; σ = 1.44 mho/m; ε_r = 39.7; ρ = 1000 kg/m^3
Phantom section: Right Section

DASY4 Configuration:
- Probe: ET3DV6 - SN1815; ConvF(5.31, 5.31, 5.31); Calibrated: 2005-01-20
- Sensor-Surface: 4mm (Mechanical And Optical Surface Detection)
- Electronics: DAE4 Sn640; Calibrated: 2004-10-12
- Phantom: SAM 5; Type: SAM; Serial: 1352
- Measurement SW: DASY4, V4.4 Build 3; Postprocessing SW: SEMCAD, V1.8 Build 130

Right,Tilt/Area Scan (61x121x1): Measurement grid: dx=10mm, dy=10mm
Maximum value of SAR (interpolated) = 0.442 mW/g

Right,Tilt/Zoom Scan (5x5x7)/Cube 0: Measurement grid: dx=7mm, dy=7mm, dz=5mm
Reference Value = 17.9 V/m; Power Drift = -0.008 dB
Peak SAR (extrapolated) = 0.627 W/kg
SAR(1 g) = 0.399 mW/g; SAR(10 g) = 0.231 mW/g
Maximum value of SAR (measured) = 0.438 mW/g

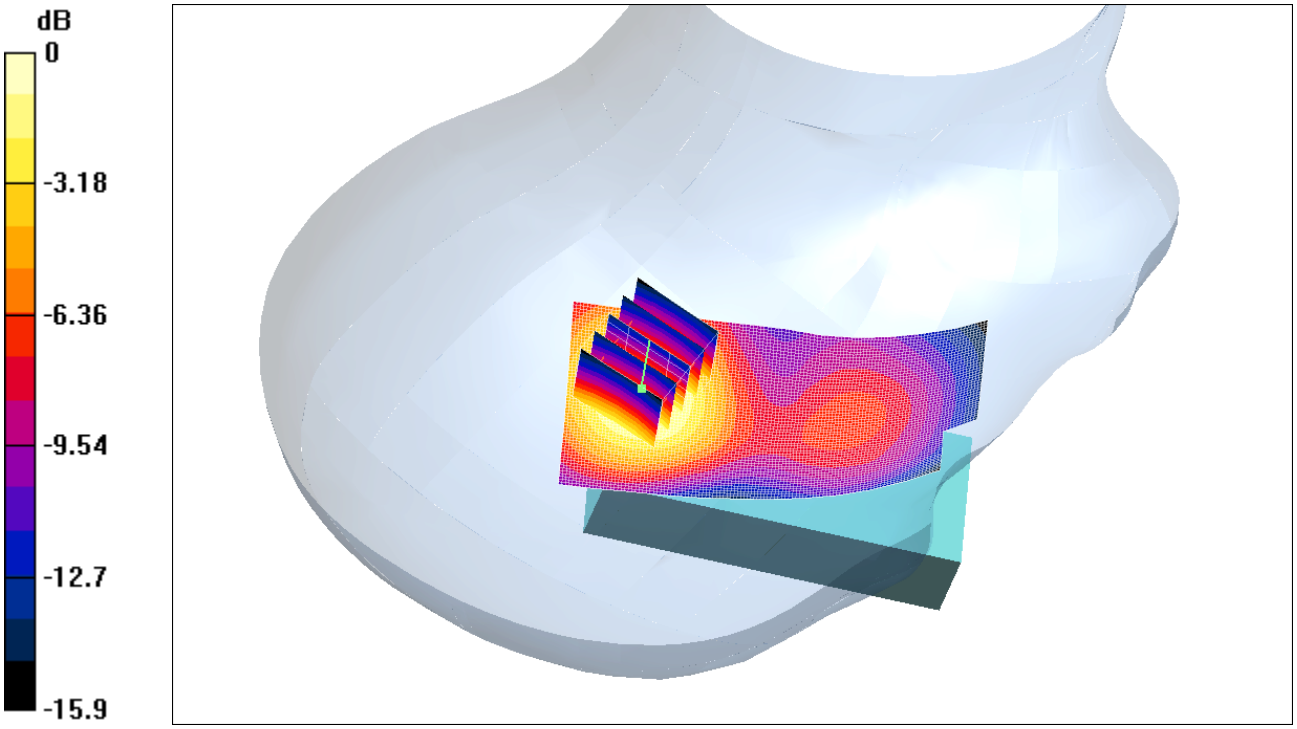

0 dB = 0.438mW/g

Date/Time: 06/07/05 12:54:25

Test Laboratory: Sony Ericsson Mobile Communications
File Name: ch661_Right_Cheek_050607_RP.da4

DUT: PY7AD021023; Type: GSM and UMTS; Serial: CB501456SA
Program Name: Mirai GSM1900

Communication System: GSM 1900; Frequency: 1880 MHz;Duty Cycle: 1:8.3
Medium parameters used: f = 1880 MHz; σ = 1.44 mho/m; ε_r = 39.7; ρ = 1000 kg/m^3
Phantom section: Right Section

DASY4 Configuration:
- Probe: ET3DV6 - SN1815; ConvF(5.31, 5.31, 5.31); Calibrated: 2005-01-20
- Sensor-Surface: 4mm (Mechanical And Optical Surface Detection)
- Electronics: DAE4 Sn640; Calibrated: 2004-10-12
- Phantom: SAM 5; Type: SAM; Serial: 1352
- Measurement SW: DASY4, V4.4 Build 3; Postprocessing SW: SEMCAD, V1.8 Build 130

Right, Cheek/Area Scan (61x121x1): Measurement grid: dx=10mm, dy=10mm
Maximum value of SAR (interpolated) = 0.626 mW/g

Right, Cheek/Zoom Scan (5x5x7)/Cube 0: Measurement grid: dx=7mm, dy=7mm, dz=5mm
Reference Value = 19 V/m; Power Drift = -0.1 dB
Peak SAR (extrapolated) = 0.811 W/kg
SAR(1 g) = 0.554 mW/g; SAR(10 g) = 0.334 mW/g
Maximum value of SAR (measured) = 0.605 mW/g

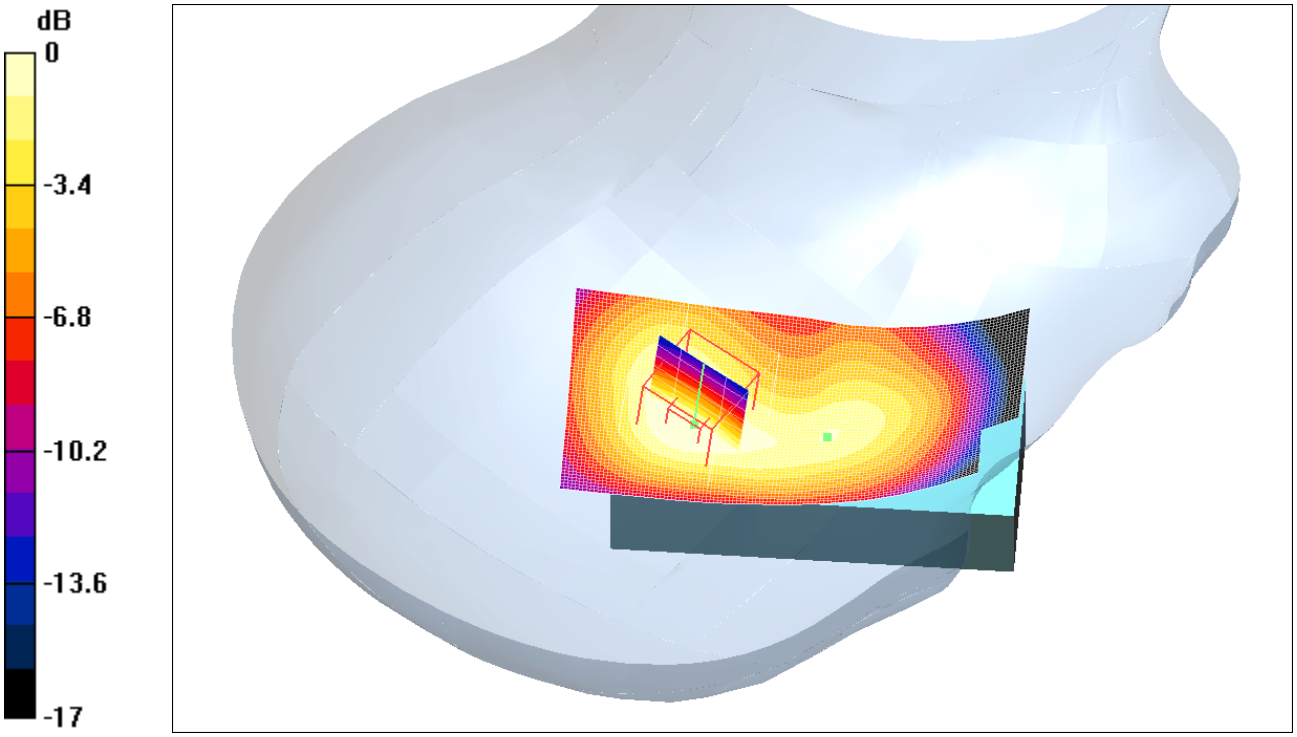

0 dB = 0.605mW/g

Date/Time: 06/07/05 17:02:42

Test Laboratory: Sony Ericsson Mobile Communications
File Name: ch661_Left_Tilt_050607_RP.da4

DUT: PY7AD021023; Type: GSM and UMTS; Serial: CB501456SA
Program Name: Mirai GSM1900

Communication System: GSM 1900; Frequency: 1880 MHz;Duty Cycle: 1:8.3
Medium parameters used: f = 1880 MHz; σ = 1.44 mho/m; ε_r = 39.7; ρ = 1000 kg/m^3
Phantom section: Left Section

DASY4 Configuration:
- Probe: ET3DV6 - SN1815; ConvF(5.31, 5.31, 5.31); Calibrated: 2005-01-20
- Sensor-Surface: 4mm (Mechanical And Optical Surface Detection)
- Electronics: DAE4 Sn640; Calibrated: 2004-10-12
- Phantom: SAM 5; Type: SAM; Serial: 1352
- Measurement SW: DASY4, V4.4 Build 3; Postprocessing SW: SEMCAD, V1.8 Build 130

Left, Tilt/Area Scan (61x121x1): Measurement grid: dx=10mm, dy=10mm
Maximum value of SAR (interpolated) = 0.523 mW/g

Left, Tilt/Zoom Scan (5x5x7)/Cube 0: Measurement grid: dx=7mm, dy=7mm, dz=5mm
Reference Value = 17.7 V/m; Power Drift = -0.1 dB
Peak SAR (extrapolated) = 0.773 W/kg
SAR(1 g) = 0.466 mW/g; SAR(10 g) = 0.261 mW/g
Maximum value of SAR (measured) = 0.516 mW/g

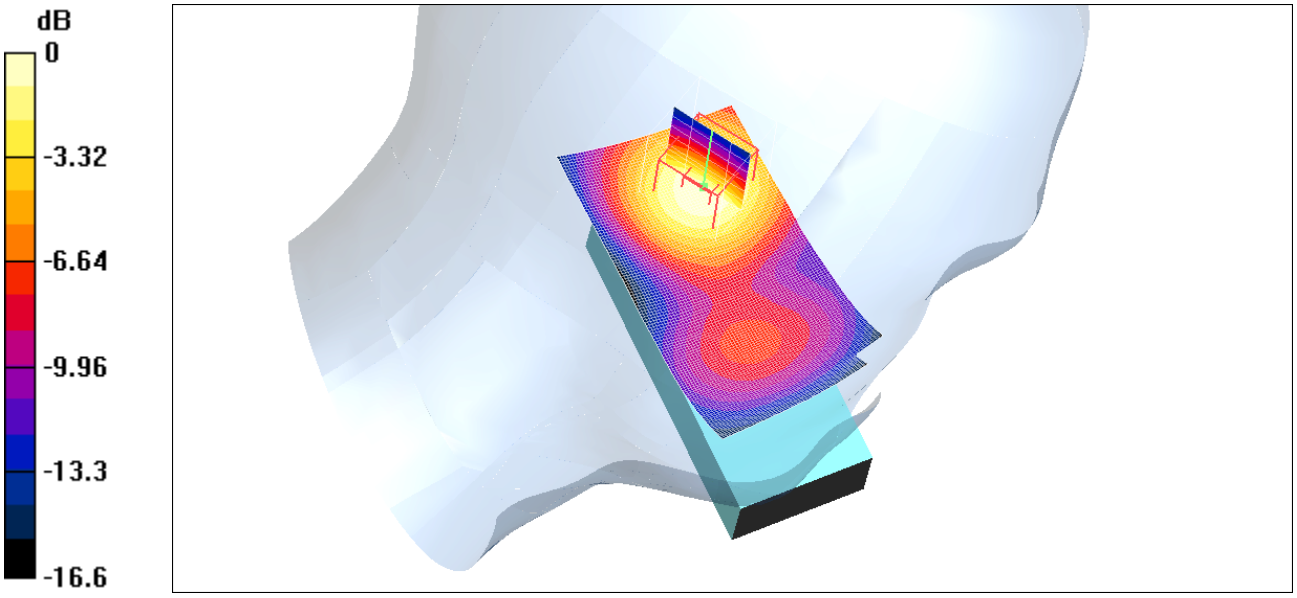

0 dB = 0.516mW/g

Date/Time: 06/07/05 15:44:21

Test Laboratory: Sony Ericsson Mobile Communications
File Name: ch661_Left_Cheek_050607_RP.da4

DUT: PY7AD021023; Type: GSM and UMTS; Serial: CB501456SA
Program Name: Mirai GSM1900

Communication System: GSM 1900; Frequency: 1880 MHz;Duty Cycle: 1:8.3
Medium parameters used: f = 1880 MHz; σ = 1.44 mho/m; ε_r = 39.7; ρ = 1000 kg/m^3
Phantom section: Left Section

DASY4 Configuration:
- Probe: ET3DV6 - SN1815; ConvF(5.31, 5.31, 5.31); Calibrated: 2005-01-20
- Sensor-Surface: 4mm (Mechanical And Optical Surface Detection)
- Electronics: DAE4 Sn640; Calibrated: 2004-10-12
- Phantom: SAM 5; Type: SAM; Serial: 1352
- Measurement SW: DASY4, V4.4 Build 3; Postprocessing SW: SEMCAD, V1.8 Build 130

Left, Cheek/Area Scan (61x121x1): Measurement grid: dx=10mm, dy=10mm
Maximum value of SAR (interpolated) = 0.665 mW/g

Left, Cheek/Zoom Scan (5x5x7)/Cube 0: Measurement grid: dx=7mm, dy=7mm, dz=5mm
Reference Value = 18.9 V/m; Power Drift = -0.1 dB
Peak SAR (extrapolated) = 0.977 W/kg
SAR(1 g) = 0.602 mW/g; SAR(10 g) = 0.352 mW/g
Maximum value of SAR (measured) = 0.659 mW/g

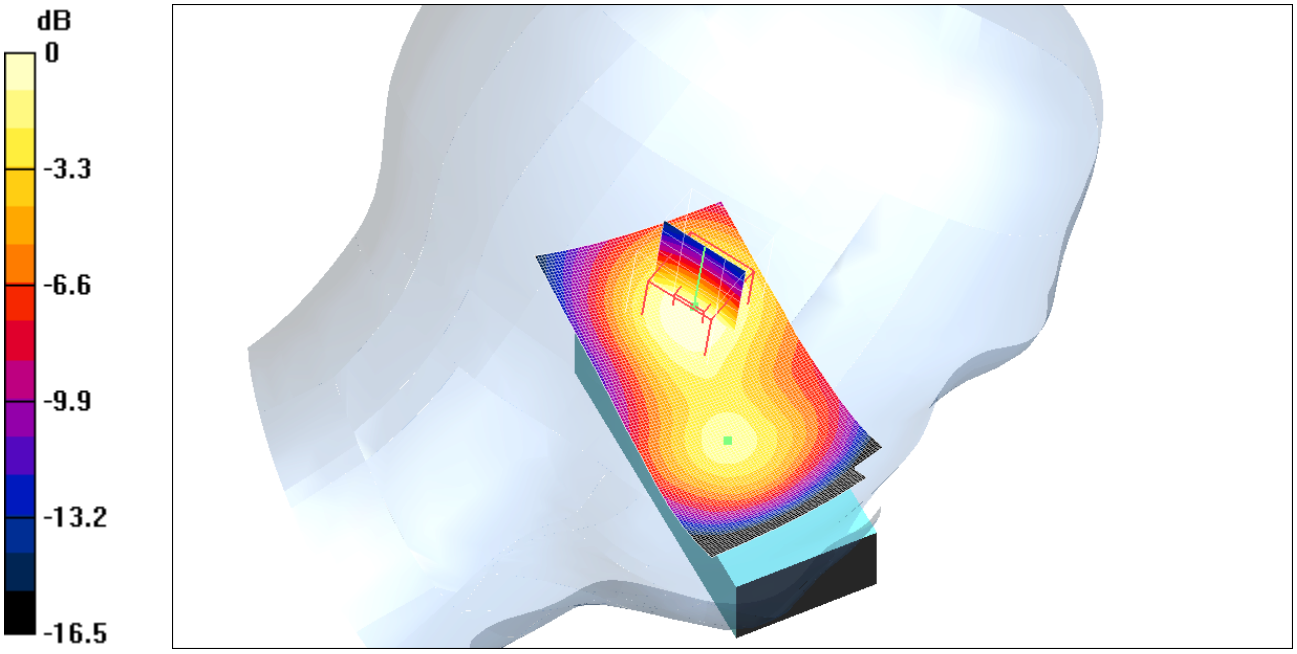

0 dB = 0.659mW/g

Date/Time: 06/07/05 14:37:00

Test Laboratory: Sony Ericsson Mobile Communications
File Name: ch512_Right_Tilt_050607_RP.da4

DUT: PY7AD021023; Type: GSM and UMTS; Serial: CB501456SA
Program Name: Mirai GSM1900

Communication System: GSM 1900; Frequency: 1850.2 MHz;Duty Cycle: 1:8.3
Medium parameters used: f = 1850.2 MHz; σ = 1.42 mho/m; ε_r = 39.8; ρ = 1000 kg/m^3
Phantom section: Right Section

DASY4 Configuration:
- Probe: ET3DV6 - SN1815; ConvF(5.31, 5.31, 5.31); Calibrated: 2005-01-20
- Sensor-Surface: 4mm (Mechanical And Optical Surface Detection)
- Electronics: DAE4 Sn640; Calibrated: 2004-10-12
- Phantom: SAM 5; Type: SAM; Serial: 1352
- Measurement SW: DASY4, V4.4 Build 3; Postprocessing SW: SEMCAD, V1.8 Build 130

Right,Tilt/Area Scan (61x121x1): Measurement grid: dx=10mm, dy=10mm
Maximum value of SAR (interpolated) = 0.485 mW/g

Right,Tilt/Zoom Scan (5x5x7)/Cube 0: Measurement grid: dx=7mm, dy=7mm, dz=5mm
Reference Value = 18.9 V/m; Power Drift = -0.1 dB
Peak SAR (extrapolated) = 0.687 W/kg
SAR(1 g) = 0.434 mW/g; SAR(10 g) = 0.252 mW/g
Maximum value of SAR (measured) = 0.479 mW/g

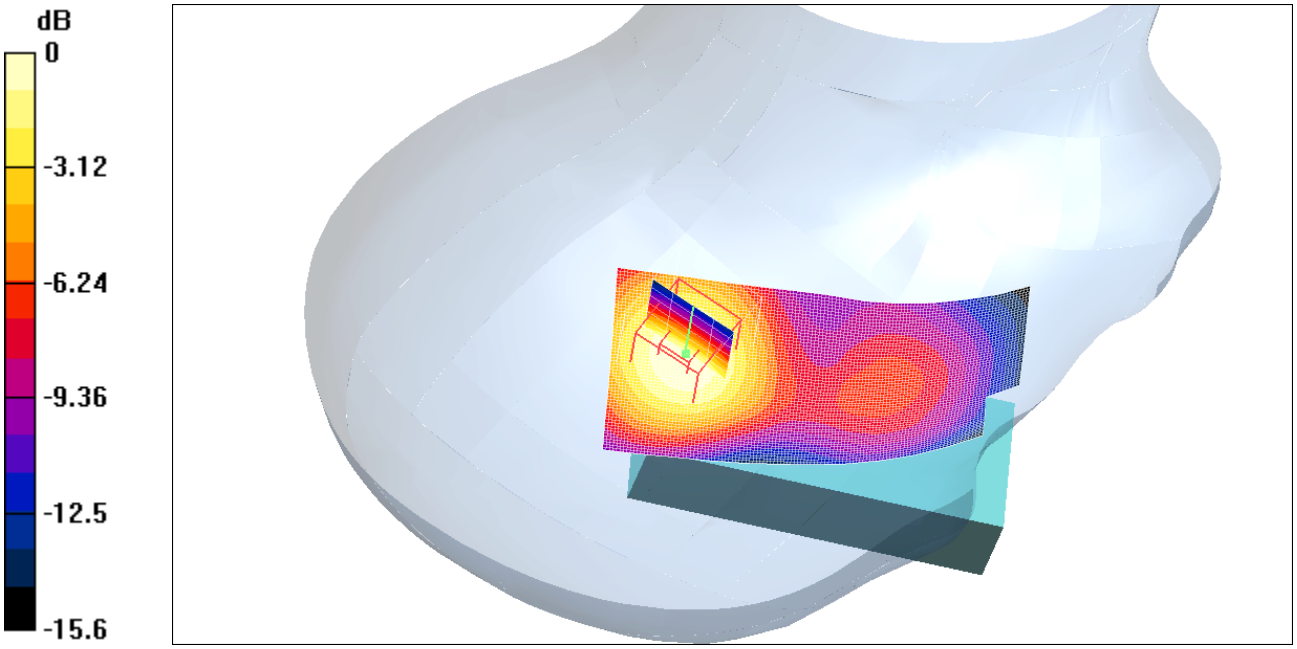

0 dB = 0.479mW/g

Date/Time: 06/07/05 12:02:49

Test Laboratory: Sony Ericsson Mobile Communications
File Name: ch512_Right_Cheek_050607_RP.da4

DUT: PY7AD021023; Type: GSM and UMTS; Serial: CB501456SA
Program Name: Mirai GSM1900

Communication System: GSM 1900; Frequency: 1850.2 MHz;Duty Cycle: 1:8.3
Medium parameters used: f = 1850.2 MHz; σ = 1.42 mho/m; ε_r = 39.8; ρ = 1000 kg/m^3
Phantom section: Right Section

DASY4 Configuration:
- Probe: ET3DV6 - SN1815; ConvF(5.31, 5.31, 5.31); Calibrated: 2005-01-20
- Sensor-Surface: 4mm (Mechanical And Optical Surface Detection)
- Electronics: DAE4 Sn640; Calibrated: 2004-10-12
- Phantom: SAM 5; Type: SAM; Serial: 1352
- Measurement SW: DASY4, V4.4 Build 3; Postprocessing SW: SEMCAD, V1.8 Build 130

Right, Cheek/Area Scan (61x121x1): Measurement grid: dx=10mm, dy=10mm
Maximum value of SAR (interpolated) = 0.713 mW/g

Right, Cheek/Zoom Scan (5x5x7)/Cube 0: Measurement grid: dx=7mm, dy=7mm, dz=5mm
Reference Value = 20.9 V/m; Power Drift = -0.1 dB
Peak SAR (extrapolated) = 0.920 W/kg
SAR(1 g) = 0.637 mW/g; SAR(10 g) = 0.389 mW/g

Maximum value of SAR (measured) = 0.692 mW/g

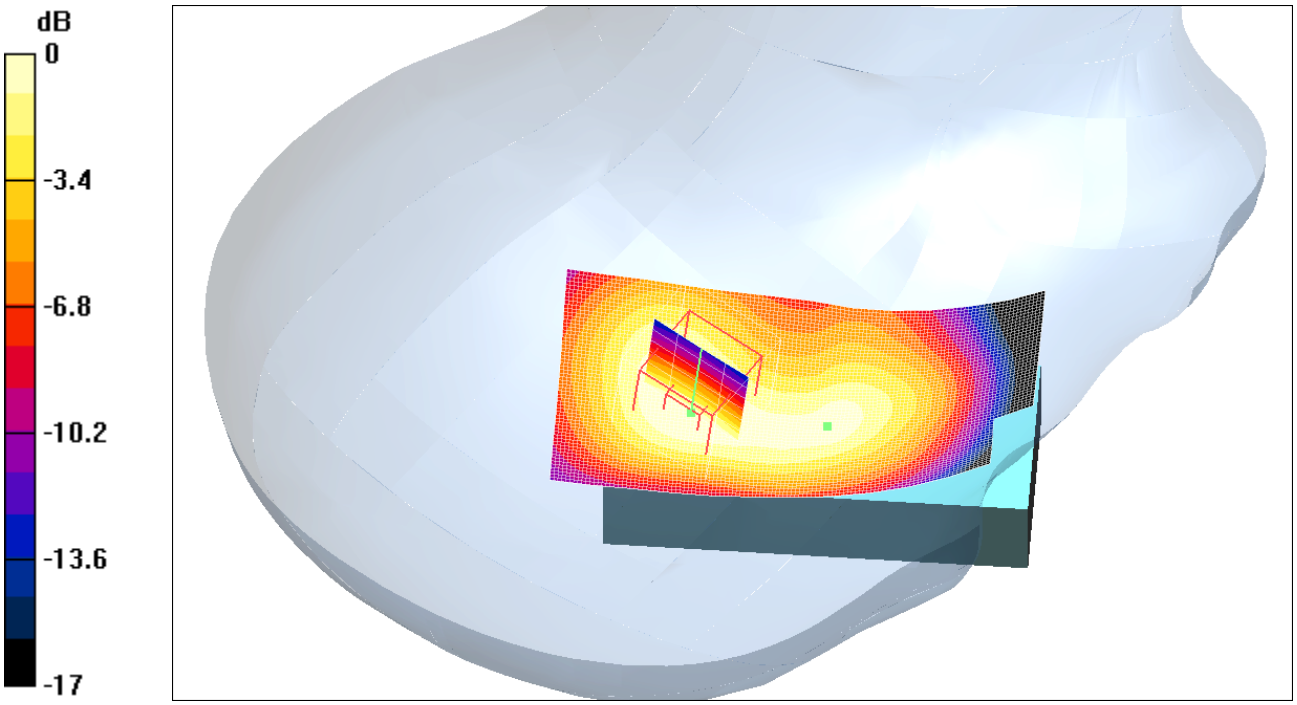

0 dB = 0.692mW/g

Date/Time: 06/07/05 17:35:57

Test Laboratory: Sony Ericsson Mobile Communications
File Name: ch512_Left_Tilt_050607_RP.da4

DUT: PY7AD021023; Type: GSM and UMTS; Serial: CB501456SA
Program Name: Mirai GSM1900

Communication System: GSM 1900; Frequency: 1850.2 MHz;Duty Cycle: 1:8.3
Medium parameters used: f = 1850.2 MHz; σ = 1.42 mho/m; ε_r = 39.8; ρ = 1000 kg/m^3
Phantom section: Left Section

DASY4 Configuration:
- Probe: ET3DV6 - SN1815; ConvF(5.31, 5.31, 5.31); Calibrated: 2005-01-20
- Sensor-Surface: 4mm (Mechanical And Optical Surface Detection)
- Electronics: DAE4 Sn640; Calibrated: 2004-10-12
- Phantom: SAM 5; Type: SAM; Serial: 1352
- Measurement SW: DASY4, V4.4 Build 3; Postprocessing SW: SEMCAD, V1.8 Build 130

Left, Tilt/Area Scan (61x121x1): Measurement grid: dx=10mm, dy=10mm
Maximum value of SAR (interpolated) = 0.583 mW/g

Left, Tilt/Zoom Scan (5x5x7)/Cube 0: Measurement grid: dx=7mm, dy=7mm, dz=5mm
Reference Value = 18.8 V/m; Power Drift = -0.1 dB
Peak SAR (extrapolated) = 0.831 W/kg
SAR(1 g) = 0.515 mW/g; SAR(10 g) = 0.292 mW/g
Maximum value of SAR (measured) = 0.564 mW/g

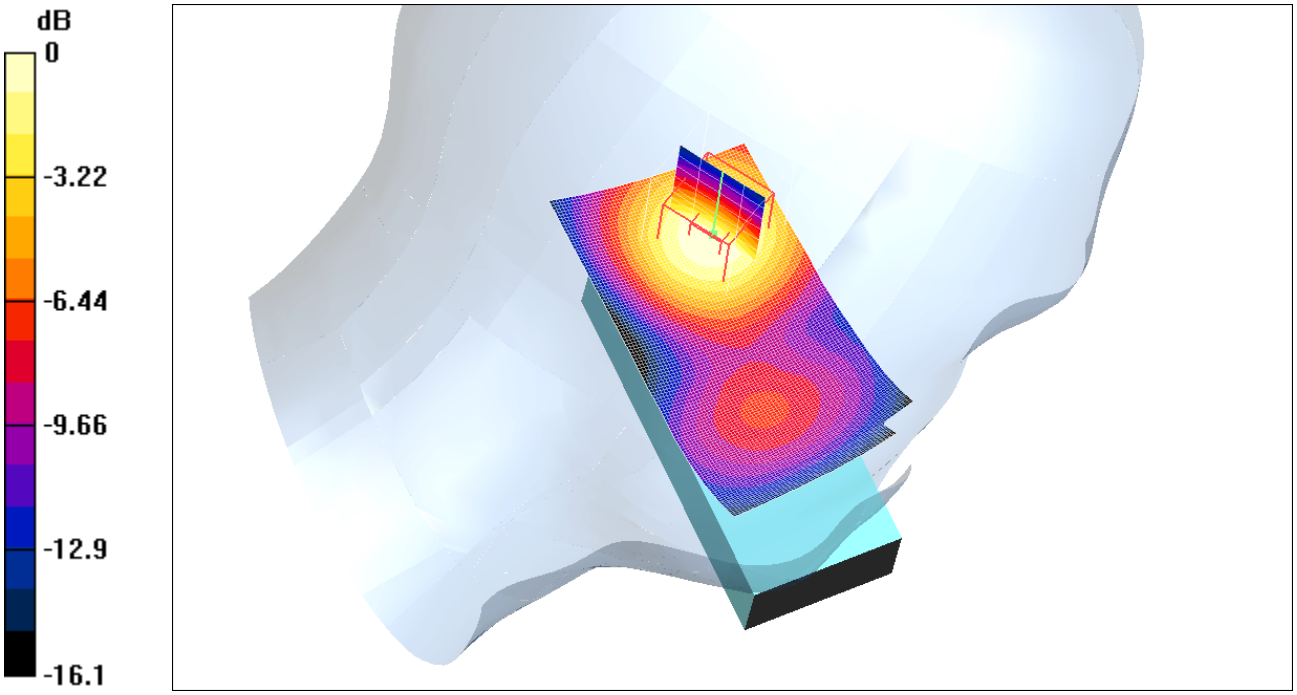

0 dB = 0.564mW/g

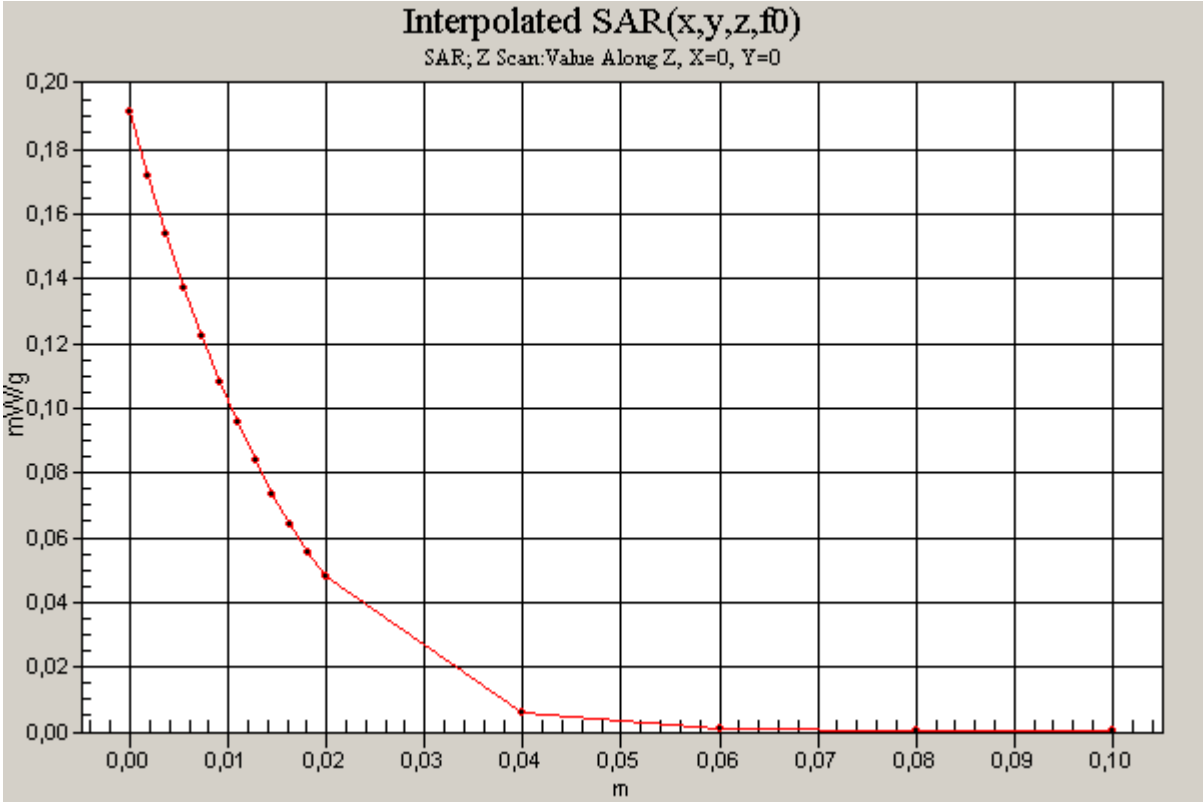
Interpolated SAR(x,y,z,f0)
SAR; Z Scan:Value Along Z, X=0, Y=0
mW/g
0,20
0,18
0,16
0,14
0,12
0,10
0,08
0,06
0,04
0,02
0,00
0,00
0,01
0,02
0,03
0,04
0,05
0,06
0,07
0,08
0,09
0,10
m

Date/Time: 06/07/05 15:13:08

Test Laboratory: Sony Ericsson Mobile Communications
File Name: ch512_Left_Cheek_050607_RP.da4

DUT: PY7AD021023; Type: GSM and UMTS; Serial: CB501456SA
Program Name: Mirai GSM1900

Communication System: GSM 1900; Frequency: 1850.2 MHz;Duty Cycle: 1:8.3
Medium parameters used: f = 1850.2 MHz; σ = 1.42 mho/m; ε_r = 39.8; ρ = 1000 kg/m^3
Phantom section: Left Section

DASY4 Configuration:
- Probe: ET3DV6 - SN1815; ConvF(5.31, 5.31, 5.31); Calibrated: 2005-01-20
- Sensor-Surface: 4mm (Mechanical And Optical Surface Detection)Sensor-Surface: 0mm (Fix Surface)
- Electronics: DAE4 Sn640; Calibrated: 2004-10-12
- Phantom: SAM 5; Type: SAM; Serial: 1352
- Measurement SW: DASY4, V4.4 Build 3; Postprocessing SW: SEMCAD, V1.8 Build 130

Left, Cheek/Area Scan (61x121x1): Measurement grid: dx=10mm, dy=10mm
Maximum value of SAR (interpolated) = 0.782 mW/g

Left, Cheek/Zoom Scan (5x5x7)/Cube 0: Measurement grid: dx=7mm, dy=7mm, dz=5mm
Reference Value = 20.5 V/m; Power Drift = -0.1 dB
Peak SAR (extrapolated) = 1.15 W/kg
SAR(1 g) = 0.701 mW/g; SAR(10 g) = 0.410 mW/g
Maximum value of SAR (measured) = 0.761 mW/g

Left, Cheek/Z Scan (1x1x16): Measurement grid: dx=20mm, dy=20mm, dz=20mm
Maximum value of SAR (interpolated) = 0.191 mW/g

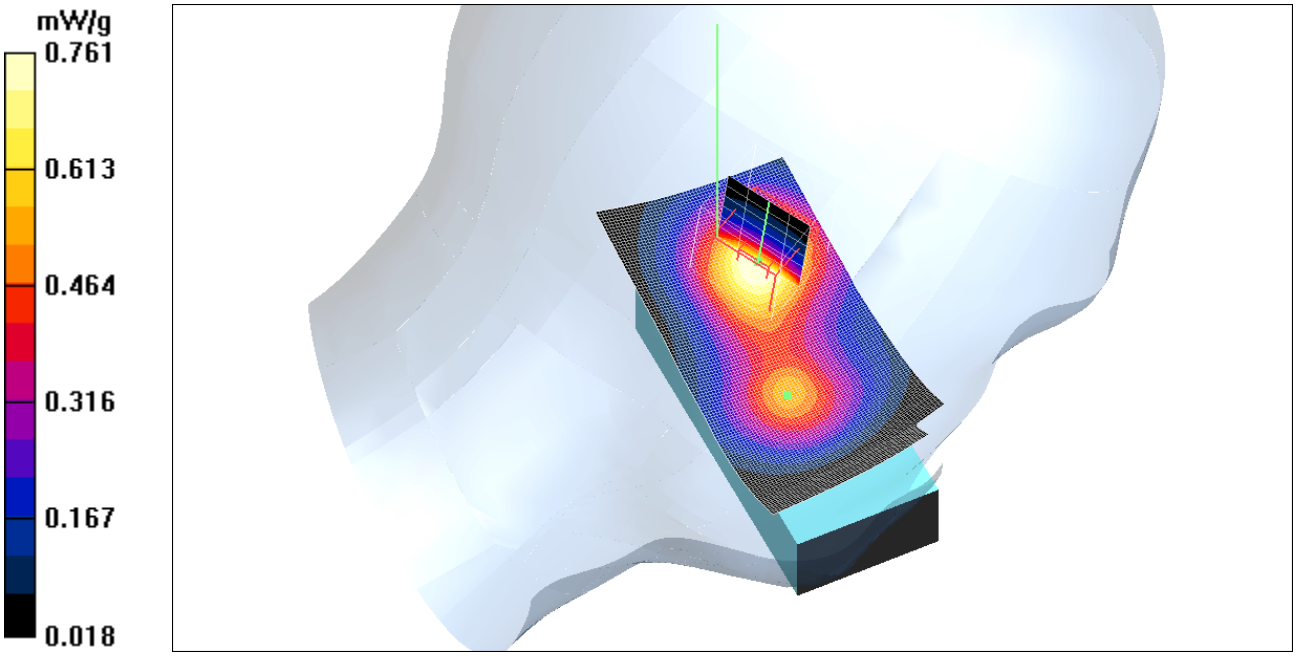

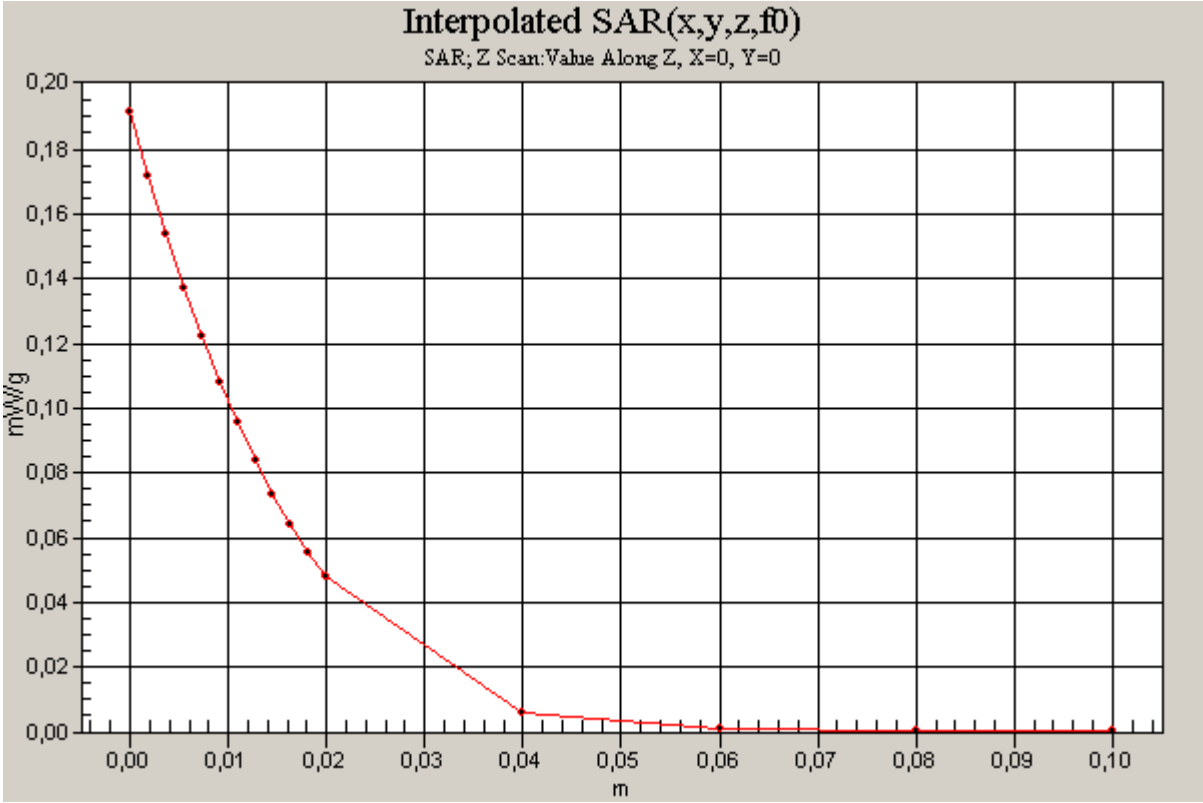
Interpolated SAR(x,y,z,f0)
SAR; Z Scan:Value Along Z, X=0, Y=0
mW/g
0,20
0,18
0,16
0,14
0,12
0,10
0,08
0,06
0,04
0,02
0,00
0,00
0,01
0,02
0,03
0,04
0,05
0,06
0,07
0,08
0,09
0,10
m

Date/Time: 06/07/05 13:53:05

Test Laboratory: Sony Ericsson Mobile Communications
File Name: ch810_Right_Tilt_050607_RP.da4

DUT: PY7AD021023; Type: GSM and UMTS; Serial: CB501456SA
Program Name: Mirai GSM1900

Communication System: GSM 1900; Frequency: 1909.8 MHz;Duty Cycle: 1:8.3
Medium parameters used (extrapolated): f = 1909.8 MHz; σ = 1.48 mho/m; ε_r = 39.5; ρ = 1000 kg/m^3
Phantom section: Right Section

DASY4 Configuration:
- Probe: ET3DV6 - SN1815; ConvF(5.31, 5.31, 5.31); Calibrated: 2005-01-20
- Sensor-Surface: 4mm (Mechanical And Optical Surface Detection)
- Electronics: DAE4 Sn640; Calibrated: 2004-10-12
- Phantom: SAM 5; Type: SAM; Serial: 1352
- Measurement SW: DASY4, V4.4 Build 3; Postprocessing SW: SEMCAD, V1.8 Build 130

Right,Tilt/Area Scan (61x121x1): Measurement grid: dx=10mm, dy=10mm
Maximum value of SAR (interpolated) = 0.353 mW/g

Right,Tilt/Zoom Scan (5x5x7)/Cube 0: Measurement grid: dx=7mm, dy=7mm, dz=5mm
Reference Value = 16 V/m; Power Drift = -0.1 dB
Peak SAR (extrapolated) = 0.503 W/kg
SAR(1 g) = 0.319 mW/g; SAR(10 g) = 0.185 mW/g
Maximum value of SAR (measured) = 0.350 mW/g

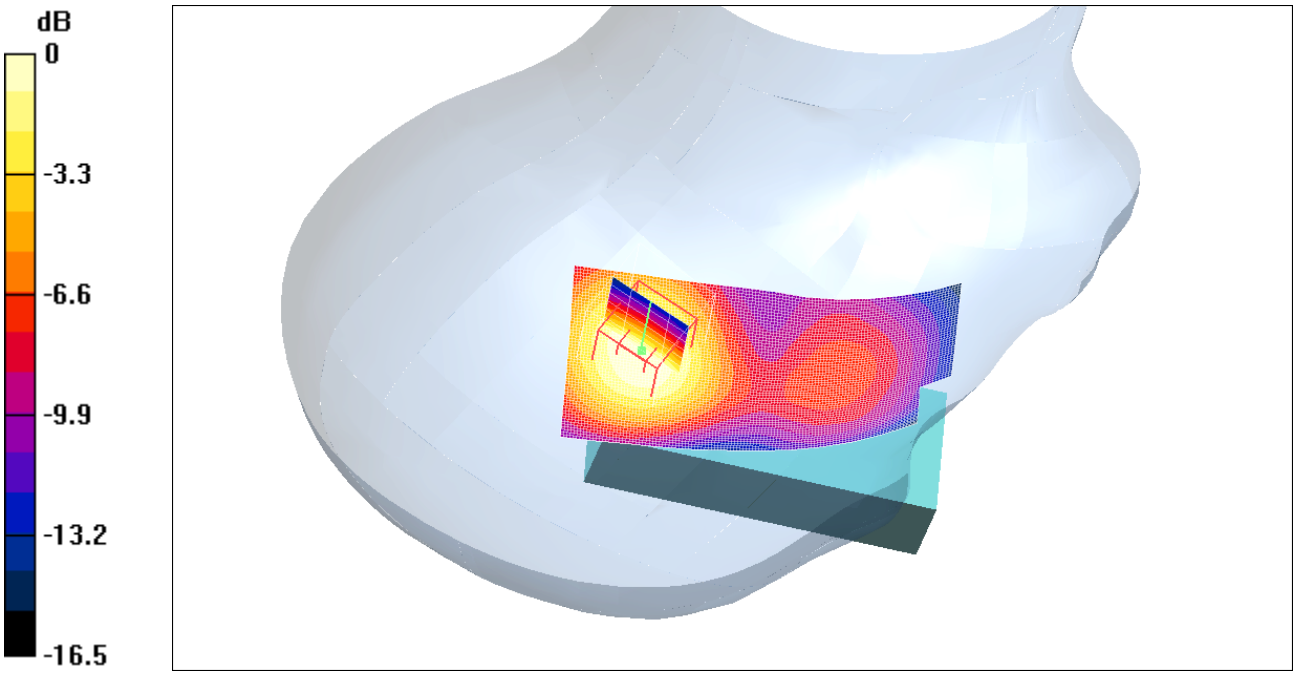

0 dB = 0.350mW/g

Date/Time: 06/08/05 09:23:14

Test Laboratory: Sony Ericsson Mobile Communications
File Name: ch810_GPRS_2Slot_15mm_050608_RP.da4

DUT: PY7AD021023; Type: GSM and UMTS; Serial:CB501456SA

Program Name: GSM 1900MHz Body

Communication System: GSM1900_GPRS; Frequency: 1909.8 MHz;Duty Cycle: 1:4.15
Medium parameters used: f = 1909.8 MHz; σ = 1.48 mho/m; ε_r = 50.8; ρ = 1000 kg/m^3
Phantom section: Flat Section

DASY4 Configuration:
- Probe: ET3DV6 - SN1815; ConvF(4.69, 4.69, 4.69); Calibrated: 2005-01-20
- Sensor-Surface: 4mm (Mechanical And Optical Surface Detection)
- Electronics: DAE4 Sn640; Calibrated: 2004-10-12
- Phantom: SAM 5; Type: SAM; Serial: 1352
- Measurement SW: DASY4, V4.4 Build 3; Postprocessing SW: SEMCAD, V1.8 Build 130

Flat,15mm/Area Scan (61x121x1): Measurement grid: dx=10mm, dy=10mm
Maximum value of SAR (interpolated) = 0.502 mW/g

Flat,15mm/Zoom Scan (5x5x7)/Cube 0: Measurement grid: dx=7mm, dy=7mm, dz=5mm
Reference Value = 14.5 V/m; Power Drift = -0.1 dB
Peak SAR (extrapolated) = 0.737 W/kg
SAR(1 g) = 0.457 mW/g; SAR(10 g) = 0.273 mW/g
Maximum value of SAR (measured) = 0.499 mW/g

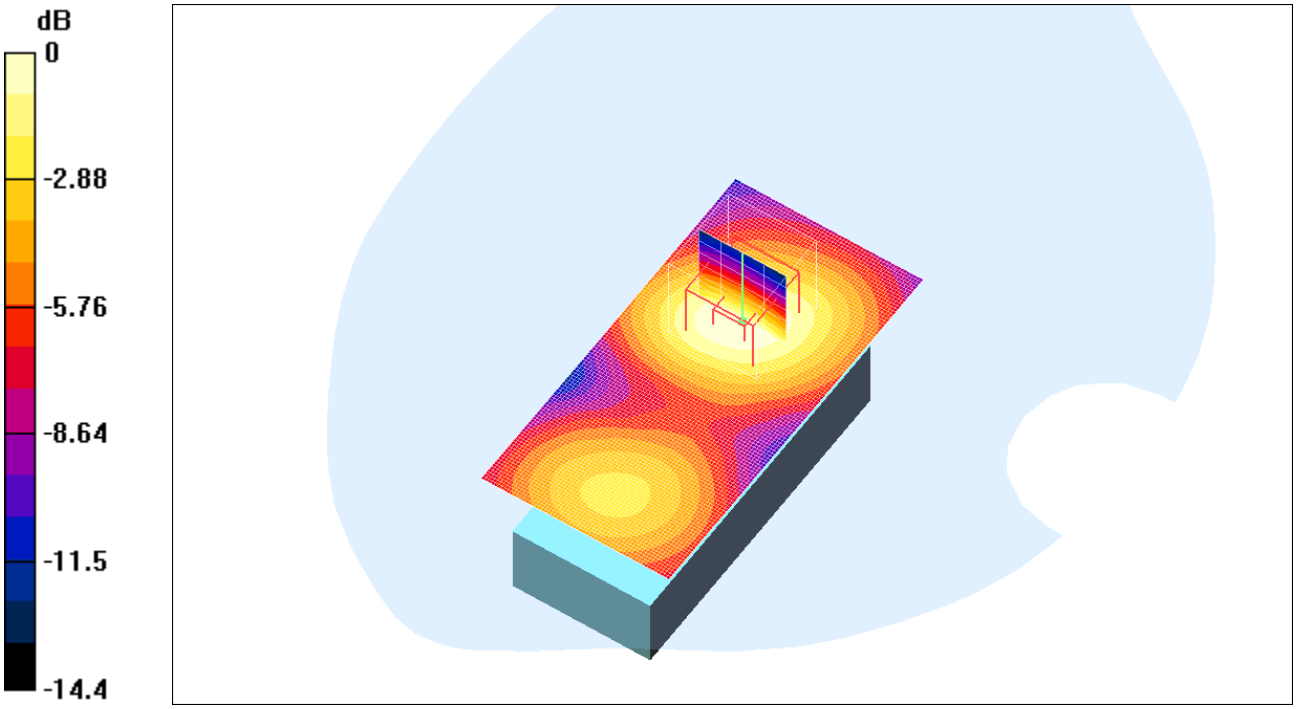

0 dB = 0.499mW/g

Date/Time: 06/08/05 10:25:57

Test Laboratory: Sony Ericsson Mobile Communications
File Name: ch661_Body_HFCable_15mm_050608_RP.da4

DUT: PY7AD021023; Type: GSM and UMTS; Serial:CB501456SA

Program Name: GSM 1900MHz Body

Communication System: GSM 1900; Frequency: 1880 MHz;Duty Cycle: 1:8.3
Medium parameters used: f = 1880 MHz; σ = 1.48 mho/m; ε_r = 50.8; ρ = 1000 kg/m^3
Phantom section: Flat Section

DASY4 Configuration:
- Probe: ET3DV6 - SN1815; ConvF(4.69, 4.69, 4.69); Calibrated: 2005-01-20
- Sensor-Surface: 4mm (Mechanical And Optical Surface Detection)
- Electronics: DAE4 Sn640; Calibrated: 2004-10-12
- Phantom: SAM 5; Type: SAM; Serial: 1352
- Measurement SW: DASY4, V4.4 Build 3; Postprocessing SW: SEMCAD, V1.8 Build 130

Flat,15mm/Area Scan (61x121x1): Measurement grid: dx=10mm, dy=10mm
Maximum value of SAR (interpolated) = 0.316 mW/g

Flat,15mm/Zoom Scan (5x5x7)/Cube 0: Measurement grid: dx=7mm, dy=7mm, dz=5mm
Reference Value = 12.6 V/m; Power Drift = -0.0 dB
Peak SAR (extrapolated) = 0.481 W/kg
SAR(1 g) = 0.288 mW/g; SAR(10 g) = 0.170 mW/g
Maximum value of SAR (measured) = 0.316 mW/g

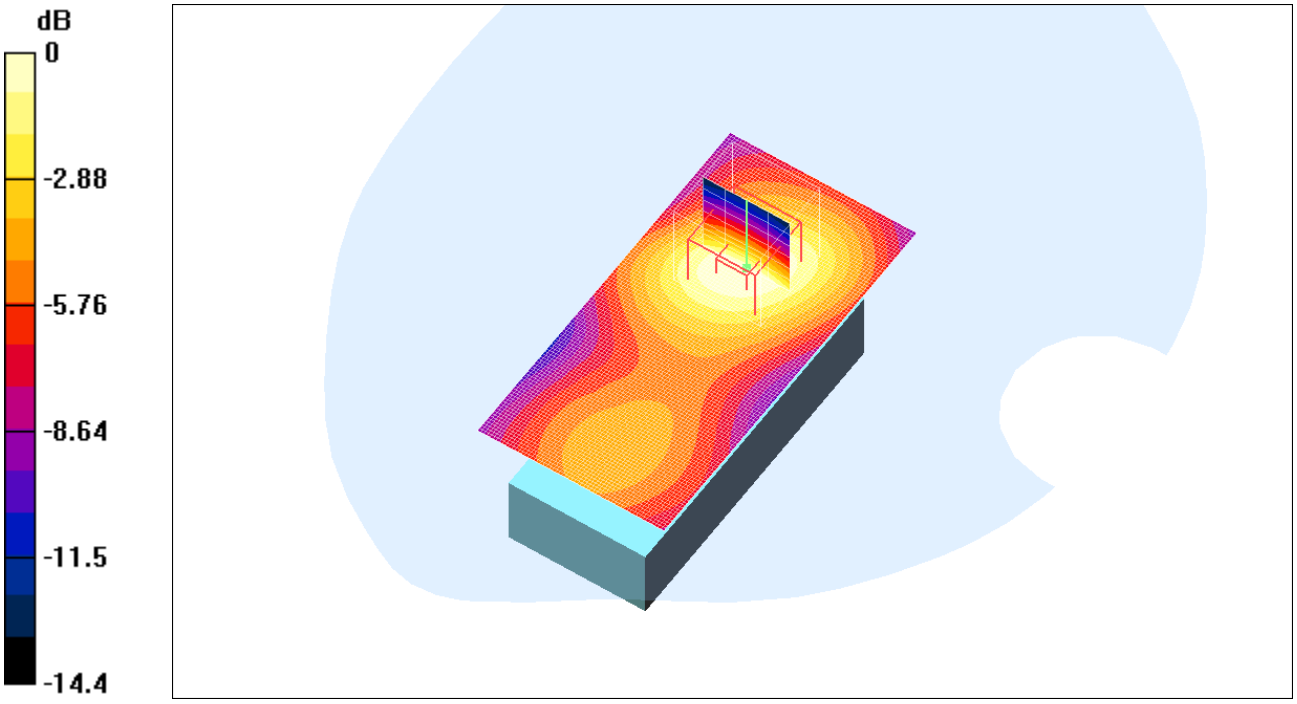

0 dB = 0.316mW/g

Date/Time: 06/08/05 09:02:42

Test Laboratory: Sony Ericsson Mobile Communications
File Name: ch661_GPRS_2Slot_15mm_050608_RP.da4

DUT: PY7AD021023; Type: GSM and UMTS; Serial:CB501456SA

Program Name: GSM 1900MHz Body

Communication System: GSM1900_GPRS; Frequency: 1880 MHz;Duty Cycle: 1:4.15
Medium parameters used: f = 1880 MHz; σ = 1.48 mho/m; ε_r = 50.8; ρ = 1000 kg/m^3
Phantom section: Flat Section

DASY4 Configuration:
- Probe: ET3DV6 - SN1815; ConvF(4.69, 4.69, 4.69); Calibrated: 2005-01-20
- Sensor-Surface: 4mm (Mechanical And Optical Surface Detection)
- Electronics: DAE4 Sn640; Calibrated: 2004-10-12
- Phantom: SAM 5; Type: SAM; Serial: 1352
- Measurement SW: DASY4, V4.4 Build 3; Postprocessing SW: SEMCAD, V1.8 Build 130

Flat,15mm/Area Scan (61x121x1): Measurement grid: dx=10mm, dy=10mm
Maximum value of SAR (interpolated) = 0.613 mW/g

Flat,15mm/Zoom Scan (5x5x7)/Cube 0: Measurement grid: dx=7mm, dy=7mm, dz=5mm
Reference Value = 16.5 V/m; Power Drift = -0.1 dB
Peak SAR (extrapolated) = 0.907 W/kg
SAR(1 g) = 0.560 mW/g; SAR(10 g) = 0.334 mW/g
Maximum value of SAR (measured) = 0.614 mW/g

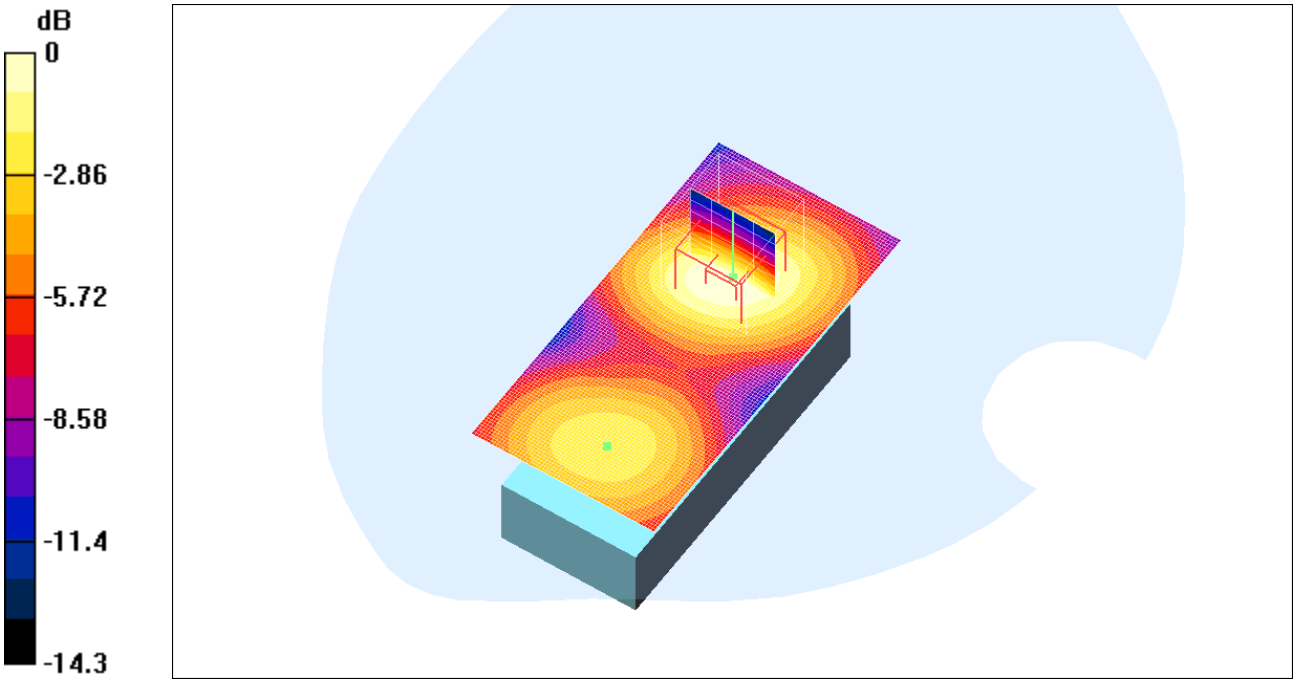

0 dB = 0.614mW/g

Date/Time: 06/08/05 11:09:06

Test Laboratory: Sony Ericsson Mobile Communications
File Name: ch512_Body_HFCable_15mm_Front_050608_RP.da4

DUT: PY7AD021023; Type: GSM and UMTS; Serial: CB501456SA

Program Name: GSM 1900MHz Body

Communication System: GSM 1900; Frequency: 1850.2 MHz;Duty Cycle: 1:8.3
Medium parameters used: f = 1850.2 MHz; σ = 1.48 mho/m; ε_r = 50.8; ρ = 1000 kg/m^3
Phantom section: Flat Section

DASY4 Configuration:
- Probe: ET3DV6 - SN1815; ConvF(4.69, 4.69, 4.69); Calibrated: 2005-01-20
- Sensor-Surface: 4mm (Mechanical And Optical Surface Detection)
- Electronics: DAE4 Sn640; Calibrated: 2004-10-12
- Phantom: SAM 5; Type: SAM; Serial: 1352
- Measurement SW: DASY4, V4.4 Build 3; Postprocessing SW: SEMCAD, V1.8 Build 130

Flat,15mm/Area Scan (61x121x1): Measurement grid: dx=10mm, dy=10mm
Maximum value of SAR (interpolated) = 0.133 mW/g

Flat,15mm/Zoom Scan (5x5x7)/Cube 0: Measurement grid: dx=7mm, dy=7mm, dz=5mm
Reference Value = 9.12 V/m; Power Drift = -0.1 dB
Peak SAR (extrapolated) = 0.174 W/kg
SAR(1 g) = 0.120 mW/g; SAR(10 g) = 0.077 mW/g
Maximum value of SAR (measured) = 0.130 mW/g

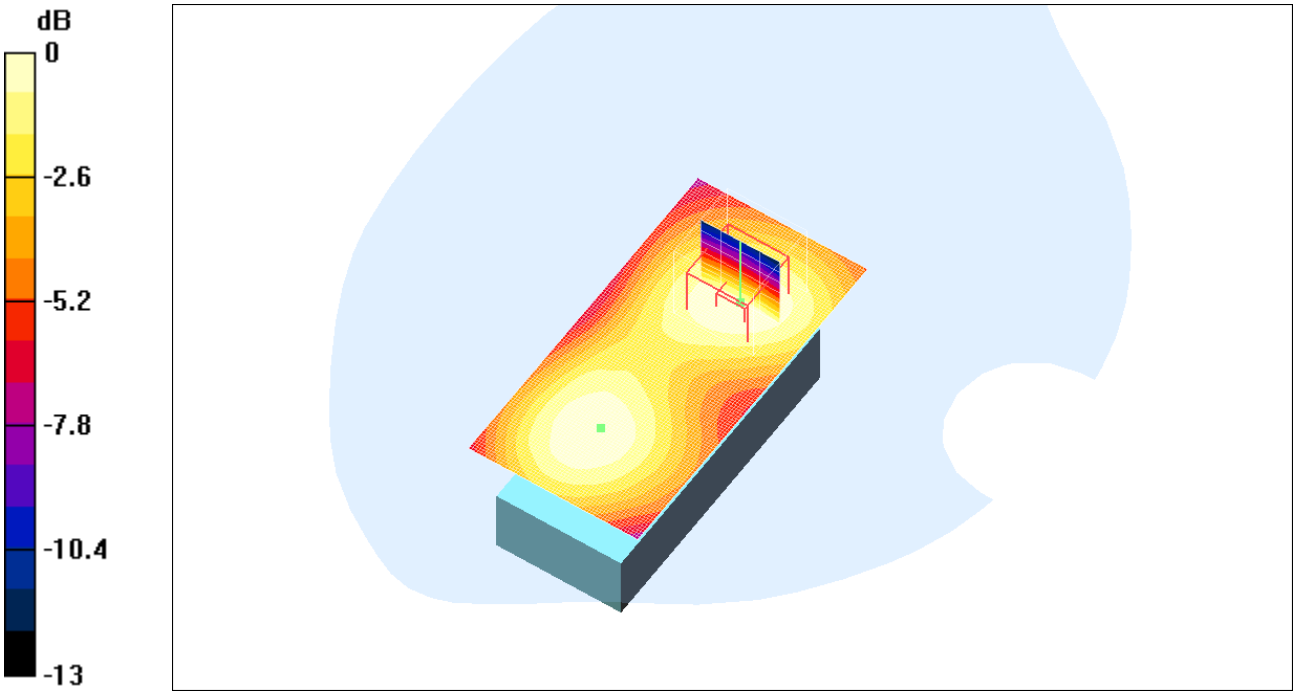

0 dB = 0.130mW/g

Date/Time: 06/08/05 10:48:09

Test Laboratory: Sony Ericsson Mobile Communications
File Name: ch512_Body_HFCable_15mm_050608_RP.da4

DUT: PY7AD021023; Type: GSM and UMTS; Serial: CB501456SA

Program Name: GSM 1900MHz Body

Communication System: GSM 1900; Frequency: 1850.2 MHz;Duty Cycle: 1:8.3
Medium parameters used: f = 1850.2 MHz; σ = 1.48 mho/m; ε_r = 50.8; ρ = 1000 kg/m^3
Phantom section: Flat Section

DASY4 Configuration:
- Probe: ET3DV6 - SN1815; ConvF(4.69, 4.69, 4.69); Calibrated: 2005-01-20
- Sensor-Surface: 4mm (Mechanical And Optical Surface Detection)
- Electronics: DAE4 Sn640; Calibrated: 2004-10-12
- Phantom: SAM 5; Type: SAM; Serial: 1352
- Measurement SW: DASY4, V4.4 Build 3; Postprocessing SW: SEMCAD, V1.8 Build 130

Flat,15mm/Area Scan (61x121x1): Measurement grid: dx=10mm, dy=10mm
Maximum value of SAR (interpolated) = 0.371 mW/g

Flat,15mm/Zoom Scan (5x5x7)/Cube 0: Measurement grid: dx=7mm, dy=7mm, dz=5mm
Reference Value = 14 V/m; Power Drift = -0.0 dB
Peak SAR (extrapolated) = 0.561 W/kg
SAR(1 g) = 0.338 mW/g; SAR(10 g) = 0.199 mW/g
Maximum value of SAR (measured) = 0.370 mW/g

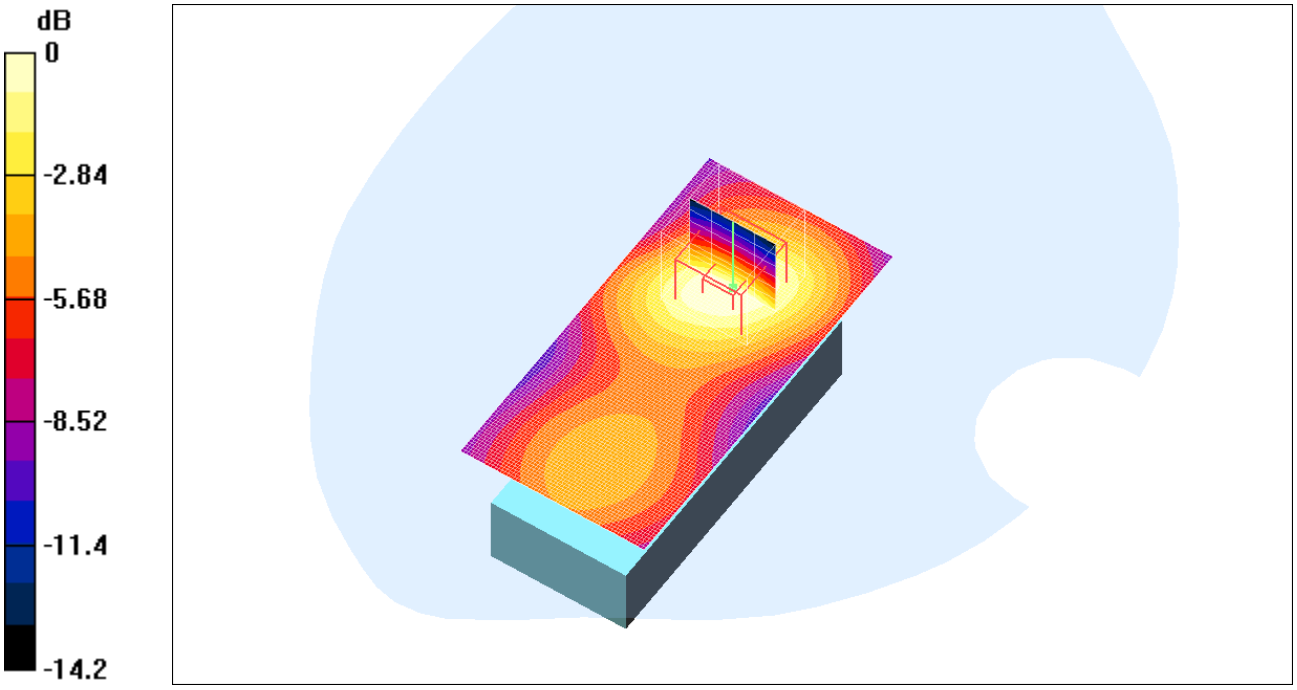

0 dB = 0.370mW/g

Date/Time: 06/08/05 09:42:14

Test Laboratory: Sony Ericsson Mobile Communications
File Name: ch512_GPRS_2Slot_15mm_Front_050608_RP.da4

DUT: PY7AD021023; Type: GSM and UMTS; Serial:CB501456SA

Program Name: GSM 1900MHz Body

Communication System: GSM1900_GPRS; Frequency: 1850.2 MHz;Duty Cycle: 1:4.15
Medium parameters used: f = 1850.2 MHz; σ = 1.48 mho/m; ε_r = 50.8; ρ = 1000 kg/m^3
Phantom section: Flat Section

DASY4 Configuration:
- Probe: ET3DV6 - SN1815; ConvF(4.69, 4.69, 4.69); Calibrated: 2005-01-20
- Sensor-Surface: 4mm (Mechanical And Optical Surface Detection)
- Electronics: DAE4 Sn640; Calibrated: 2004-10-12
- Phantom: SAM 5; Type: SAM; Serial: 1352
- Measurement SW: DASY4, V4.4 Build 3; Postprocessing SW: SEMCAD, V1.8 Build 130

Flat,15mm/Area Scan (61x121x1): Measurement grid: dx=10mm, dy=10mm
Maximum value of SAR (interpolated) = 0.359 mW/g

Flat,15mm/Zoom Scan (5x5x7)/Cube 0: Measurement grid: dx=7mm, dy=7mm, dz=5mm
Reference Value = 14 V/m; Power Drift = -0.1 dB
Peak SAR (extrapolated) = 0.478 W/kg
SAR(1 g) = 0.333 mW/g; SAR(10 g) = 0.215 mW/g
Maximum value of SAR (measured) = 0.361 mW/g

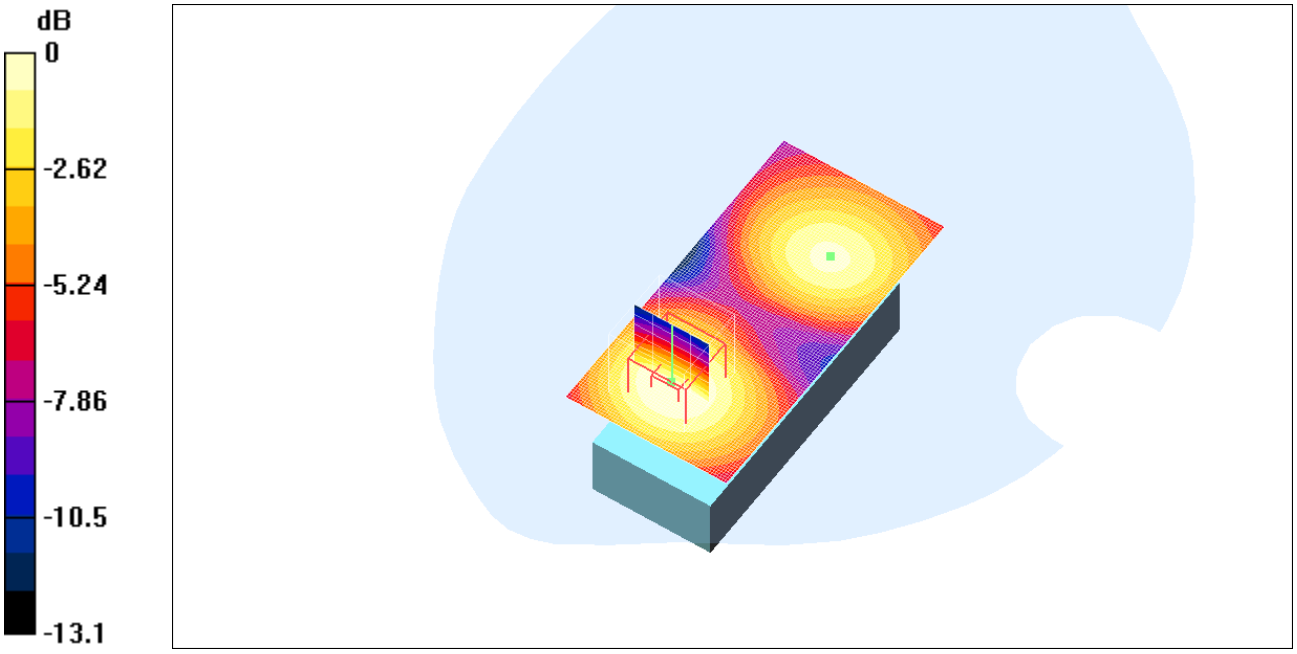

0 dB = 0.361mW/g

Date/Time: 06/08/05 08:44:02

Test Laboratory: Sony Ericsson Mobile Communications
File Name: ch512_GPRS_2Slot_15mm_050608_RP.da4

DUT: PY7AD021023; Type: GSM and UMTS; Serial:CB501456SA

Program Name: GSM 1900MHz Body

Communication System: GSM1900_GPRS; Frequency: 1850.2 MHz;Duty Cycle: 1:4.15
Medium parameters used: f = 1850.2 MHz; σ = 1.48 mho/m; ε_r = 50.8; ρ = 1000 kg/m^3
Phantom section: Flat Section

DASY4 Configuration:
- Probe: ET3DV6 - SN1815; ConvF(4.69, 4.69, 4.69); Calibrated: 2005-01-20
- Sensor-Surface: 4mm (Mechanical And Optical Surface Detection)Sensor-Surface: 0mm (Fix Surface)
- Electronics: DAE4 Sn640; Calibrated: 2004-10-12
- Phantom: SAM 5; Type: SAM; Serial: 1352
- Measurement SW: DASY4, V4.4 Build 3; Postprocessing SW: SEMCAD, V1.8 Build 130

Flat,15mm/Area Scan (61x121x1): Measurement grid: dx=10mm, dy=10mm
Maximum value of SAR (interpolated) = 0.760 mW/g

Flat,15mm/Zoom Scan (5x5x7)/Cube 0: Measurement grid: dx=7mm, dy=7mm, dz=5mm
Reference Value = 18.8 V/m; Power Drift = -0.2 dB
Peak SAR (extrapolated) = 1.09 W/kg
SAR(1 g) = 0.683 mW/g; SAR(10 g) = 0.405 mW/g
Maximum value of SAR (measured) = 0.750 mW/g

Flat,15mm/Z Scan (1x1x16): Measurement grid: dx=20mm, dy=20mm, dz=20mm
Maximum value of SAR (interpolated) = 0.202 mW/g

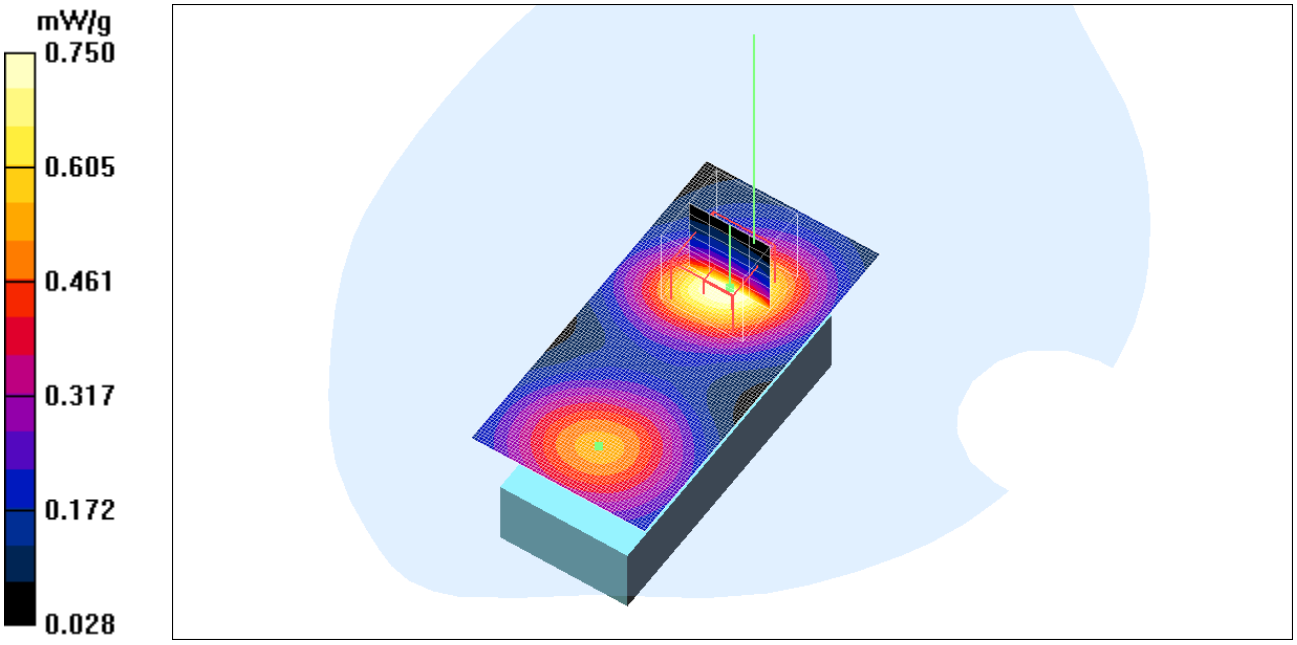

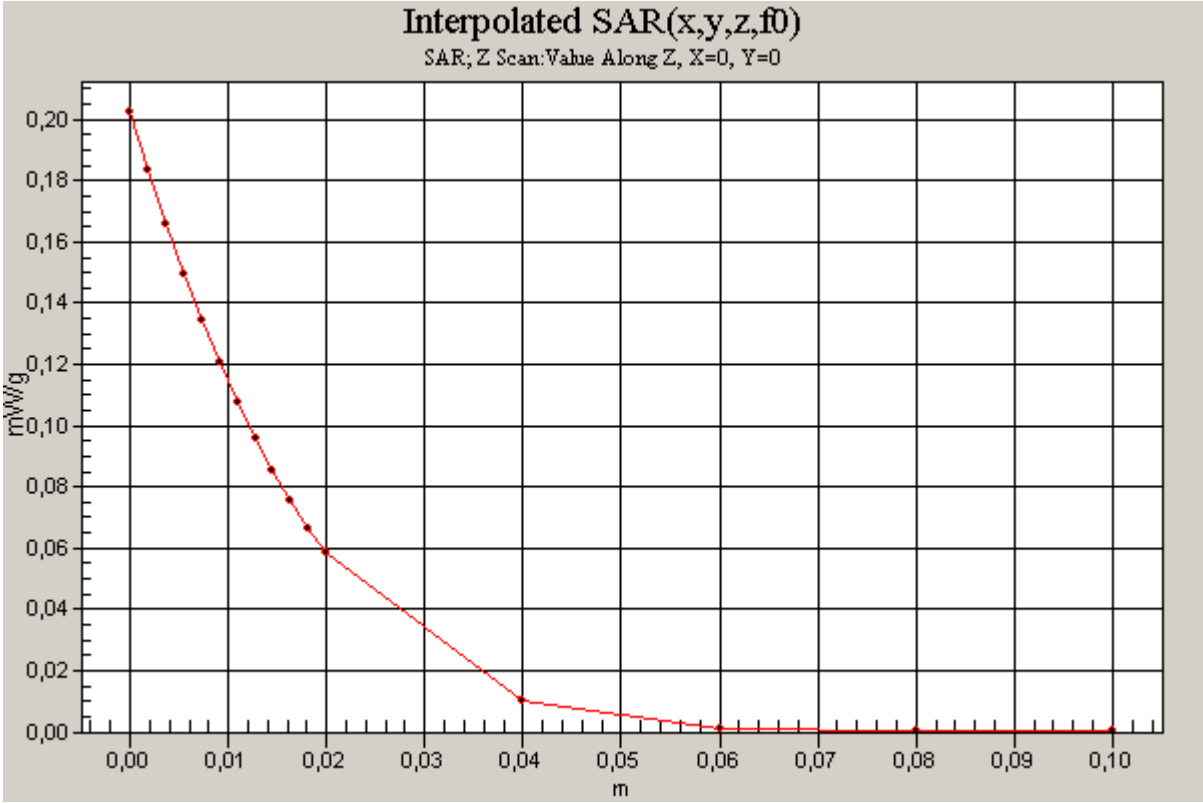
Interpolated SAR(x,y,z,f0)
SAR; Z Scan:Value Along Z, X=0, Y=0
mW/g
0,20
0,18
0,16
0,14
0,12
0,10
0,08
0,06
0,04
0,02
0,00
0,00
0,01
0,02
0,03
0,04
0,05
0,06
0,07
0,08
0,09
0,10
m

Date/Time: 06/08/05 11:27:58

Test Laboratory: Sony Ericsson Mobile Communications
File Name: ch512_Body_BT_15mm_050608_RP.da4

DUT: PY7AD021023; Type: GSM and UMTS; Serial: CB501456SA

Program Name: GSM 1900MHz Body

Communication System: GSM 1900; Frequency: 1850.2 MHz;Duty Cycle: 1:8.3
Medium parameters used: f = 1850.2 MHz; σ = 1.48 mho/m; ε_r = 50.8; ρ = 1000 kg/m^3
Phantom section: Flat Section

DASY4 Configuration:
- Probe: ET3DV6 - SN1815; ConvF(4.69, 4.69, 4.69); Calibrated: 2005-01-20
- Sensor-Surface: 4mm (Mechanical And Optical Surface Detection)
- Electronics: DAE4 Sn640; Calibrated: 2004-10-12
- Phantom: SAM 5; Type: SAM; Serial: 1352
- Measurement SW: DASY4, V4.4 Build 3; Postprocessing SW: SEMCAD, V1.8 Build 130

Flat,15mm/Area Scan (61x121x1): Measurement grid: dx=10mm, dy=10mm
Maximum value of SAR (interpolated) = 0.326 mW/g

Flat,15mm/Zoom Scan (5x5x7)/Cube 0: Measurement grid: dx=7mm, dy=7mm, dz=5mm
Reference Value = 12.2 V/m; Power Drift = -0.0 dB
Peak SAR (extrapolated) = 0.486 W/kg
SAR(1 g) = 0.297 mW/g; SAR(10 g) = 0.175 mW/g
Maximum value of SAR (measured) = 0.327 mW/g

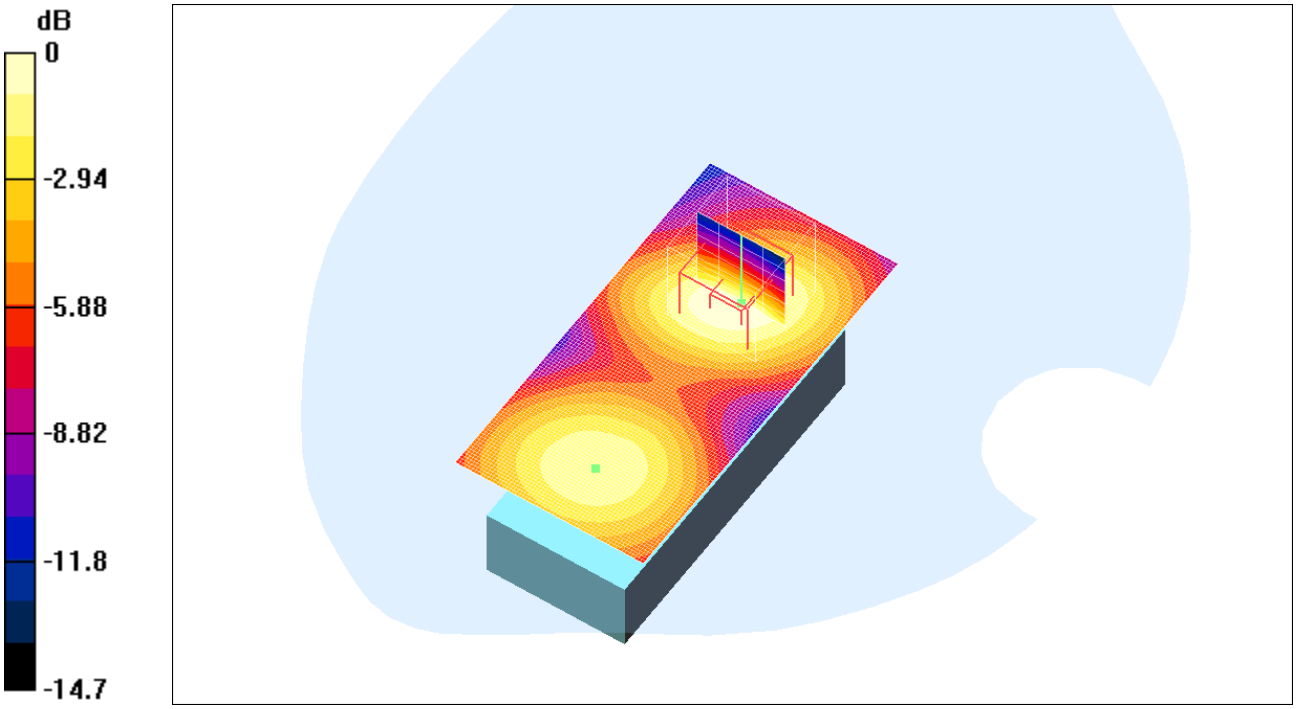

0 dB = 0.327mW/g

Date/Time: 06/08/05 10:05:35

Test Laboratory: Sony Ericsson Mobile Communications
File Name: ch810_Body_HFCable_15mm_050608_RP.da4

DUT: PY7AD021023; Type: GSM and UMTS; Serial:CB501456SA

Program Name: GSM 1900MHz Body

Communication System: GSM 1900; Frequency: 1909.8 MHz;Duty Cycle: 1:8.3
Medium parameters used: f = 1909.8 MHz; σ = 1.48 mho/m; ε_r = 50.8; ρ = 1000 kg/m^3
Phantom section: Flat Section

DASY4 Configuration:
- Probe: ET3DV6 - SN1815; ConvF(4.69, 4.69, 4.69); Calibrated: 2005-01-20
- Sensor-Surface: 4mm (Mechanical And Optical Surface Detection)
- Electronics: DAE4 Sn640; Calibrated: 2004-10-12
- Phantom: SAM 5; Type: SAM; Serial: 1352
- Measurement SW: DASY4, V4.4 Build 3; Postprocessing SW: SEMCAD, V1.8 Build 130

Flat,15mm/Area Scan (61x121x1): Measurement grid: dx=10mm, dy=10mm
Maximum value of SAR (interpolated) = 0.232 mW/g

Flat,15mm/Zoom Scan (5x5x7)/Cube 0: Measurement grid: dx=7mm, dy=7mm, dz=5mm
Reference Value = 10.6 V/m; Power Drift = -0.0 dB
Peak SAR (extrapolated) = 0.352 W/kg
SAR(1 g) = 0.213 mW/g; SAR(10 g) = 0.127 mW/g
Maximum value of SAR (measured) = 0.231 mW/g

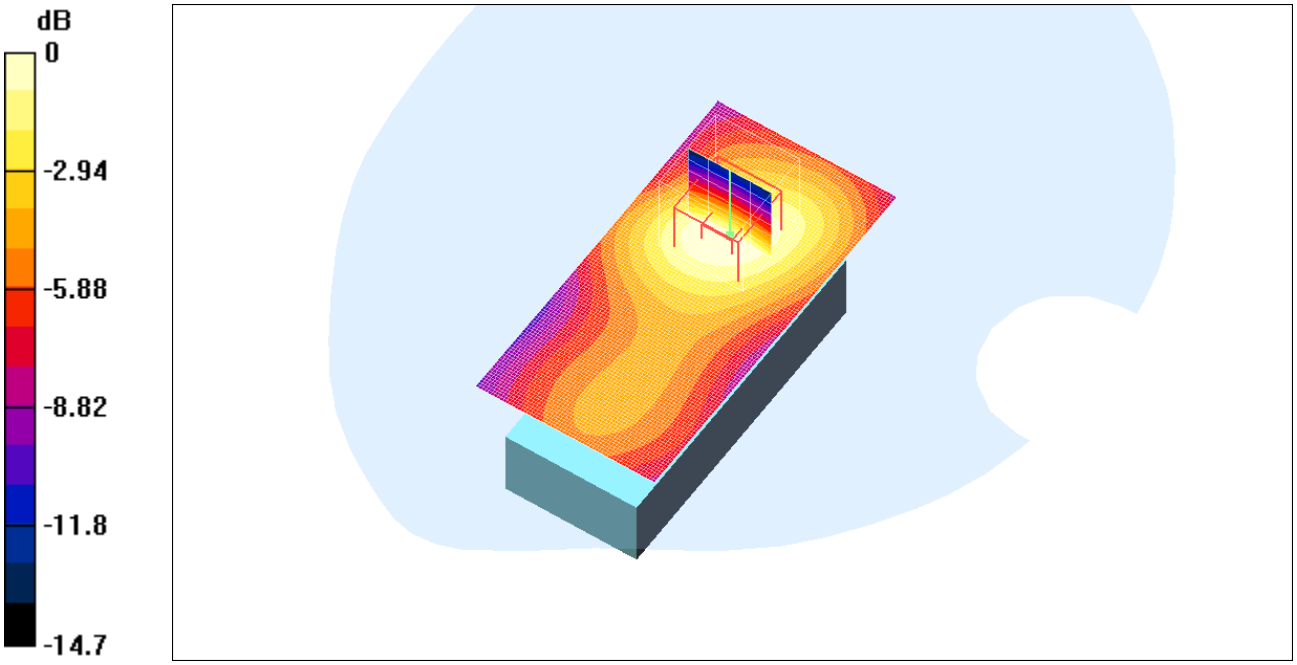

0 dB = 0.231mW/g