System Check_Head_750MHz_131229

DUT: D750V3-1099

Communication System: CW; Frequency: 750 MHz;Duty Cycle: 1:1
Medium: HSL_750_131229 Medium parameters used: f = 750 MHz; σ = 0.883 S/m; ε_r = 40.81; ρ = 1000 kg/m^3
Ambient Temperature：23.6 ℃； Liquid Temperature：22.6 ℃

DASY5 Configuration:
- Probe: EX3DV4 - SN3898; ConvF(10.23, 10.23, 10.23); Calibrated: 2013/1/14;
- Sensor-Surface: 2mm (Mechanical Surface Detection)
- Electronics: DAE4 Sn778; Calibrated: 2013/8/21
- Phantom: SAM Right; Type: QD000P40CD; Serial: TP:1644
- Measurement SW: DASY52, Version 52.8 (6); SEMCAD X Version 14.6.9 (7117)

Configuration/Pin=250mW/Area Scan (61x61x1): Interpolated grid: dx=1.500 mm, dy=1.500 mm
Maximum value of SAR (interpolated) = 2.57 W/kg

Configuration/Pin=250mW/Zoom Scan (5x5x7)/Cube 0: Measurement grid: dx=8mm, dy=8mm, dz=5mm
Reference Value = 54.918 V/m; Power Drift = 0.14 dB
Peak SAR (extrapolated) = 3.20 W/kg
SAR(1 g) = 2.13 W/kg; SAR(10 g) = 1.38 W/kg
Maximum value of SAR (measured) = 2.72 W/kg

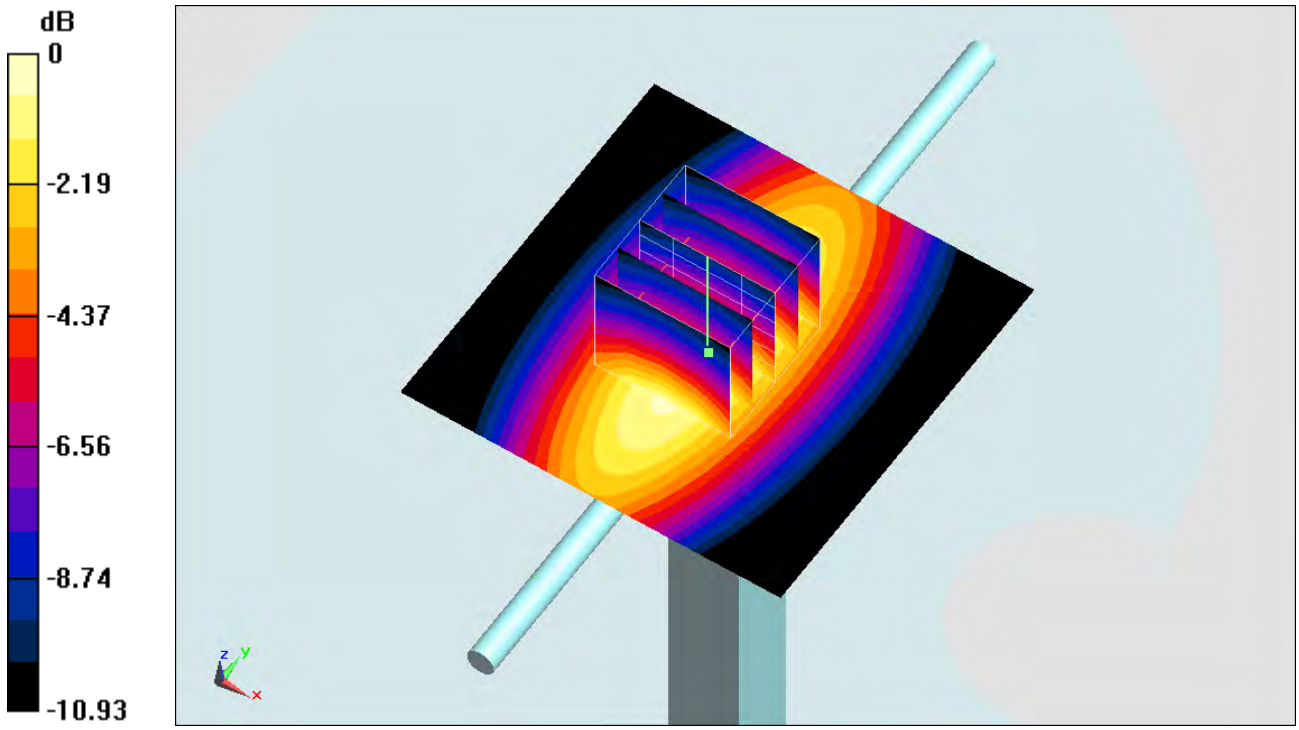

0 dB = 2.72 W/kg = 4.35 dBW/kg

Test Laboratory: Sporton International Inc. SAR/HAC Testing Lab Date: 2013/12/29

System Check_Body_750MHz_131229

DUT: D750V3-1099

Communication System: CW; Frequency: 750 MHz;Duty Cycle: 1:1
Medium: MSL_750_131229 Medium parameters used: f = 750 MHz; σ = 0.964 S/m; ε_r = 54.284; ρ = 1000 kg/m^3
Ambient Temperature：23.7 ℃； Liquid Temperature：22.7 ℃

DASY5 Configuration:
- Probe: EX3DV4 - SN3898; ConvF(9.87, 9.87, 9.87); Calibrated: 2013/1/14;
- Sensor-Surface: 2mm (Mechanical Surface Detection)
- Electronics: DAE4 Sn778; Calibrated: 2013/8/21
- Phantom: SAM Right; Type: QD000P40CD; Serial: TP:1644
- Measurement SW: DASY52, Version 52.8 (6); SEMCAD X Version 14.6.9 (7117)

Configuration/Pin=250mW/Area Scan (61x61x1): Interpolated grid: dx=1.500 mm, dy=1.500 mm
Maximum value of SAR (interpolated) = 2.83 W/kg

Configuration/Pin=250mW/Zoom Scan (5x5x7)/Cube 0: Measurement grid: dx=8mm, dy=8mm, dz=5mm
Reference Value = 55.382 V/m; Power Drift = -0.14 dB
Peak SAR (extrapolated) = 2.93 W/kg
SAR(1 g) = 1.98 W/kg; SAR(10 g) = 1.32 W/kg
Maximum value of SAR (measured) = 2.50 W/kg

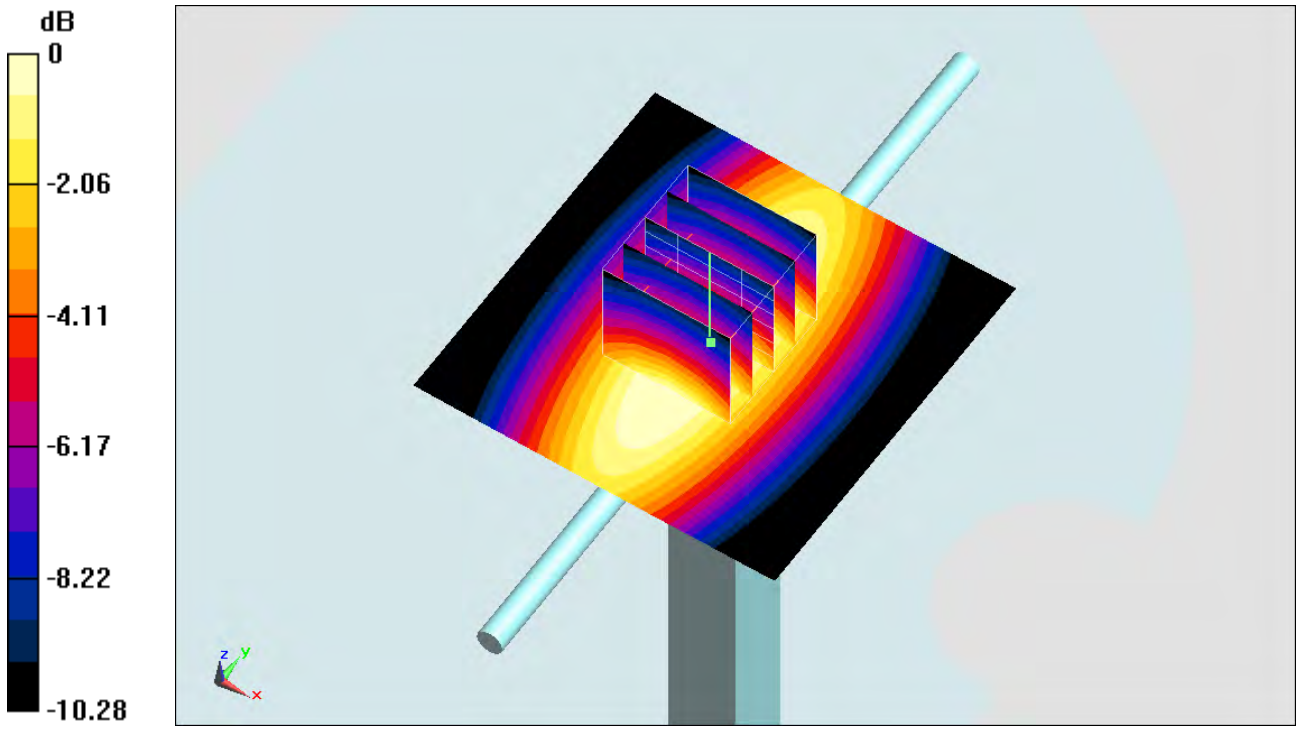

0 dB = 2.50 W/kg = 3.98 dBW/kg

System Check_Head_835MHz_131222

DUT: D835V2-4d162

Communication System: CW; Frequency: 835 MHz;Duty Cycle: 1:1
Medium: HSL_850_131221 Medium parameters used: f = 835 MHz; σ = 0.9 mho/m; ε_r = 40.8; ρ = 1000 kg/m^3
Ambient Temperature：23.6 ℃； Liquid Temperature：22.6 ℃

DASY4 Configuration:
- Probe: EX3DV4 - SN3935; ConvF(10.11, 10.11, 10.11); Calibrated: 2013/11/4
- Sensor-Surface: 2mm (Mechanical Surface Detection)
- Electronics: DAE4 Sn1338; Calibrated: 2013/11/5
- Phantom: SAM_Left; Type: SAM; Serial: TP-1150
- Measurement SW: DASY4, V4.7 Build 80; Postprocessing SW: SEMCAD, V1.8 Build 186

Pin=250mW/Area Scan (61x61x1): Measurement grid: dx=15mm, dy=15mm
Maximum value of SAR (interpolated) = 3.19 mW/g

Pin=250mW/Zoom Scan (5x5x7)/Cube 0: Measurement grid: dx=8mm, dy=8mm, dz=5mm
Reference Value = 60.6 V/m; Power Drift = -0.026 dB
Peak SAR (extrapolated) = 3.76 W/kg
SAR(1 g) = 2.51 mW/g; SAR(10 g) = 1.64 mW/g
Maximum value of SAR (measured) = 3.18 mW/g

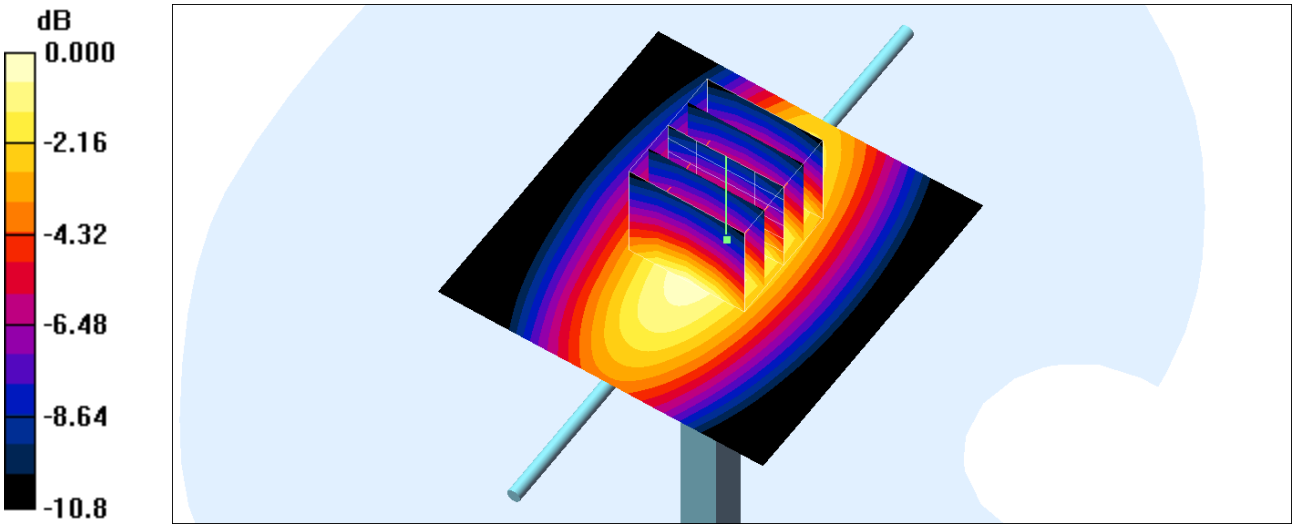

0 dB = 3.18mW/g

System Check_Head_835MHz_140104

DUT: D835V2-4d162

Communication System: CW; Frequency: 835 MHz;Duty Cycle: 1:1
Medium: HSL_850_140104 Medium parameters used: f = 835 MHz; σ = 0.885 mho/m; ε_r = 42; ρ = 1000 kg/m^3
Ambient Temperature：23.4 ℃； Liquid Temperature：22.4 ℃

DASY4 Configuration:
- Probe: EX3DV4 - SN3931; ConvF(9.87, 9.87, 9.87); Calibrated: 2013/9/10
- Sensor-Surface: 2mm (Mechanical Surface Detection)
- Electronics: DAE4 Sn1279; Calibrated: 2013/1/28
- Phantom: SAM_Right; Type: SAM; Serial: TP-1303
- Measurement SW: DASY4, V4.7 Build 80; Postprocessing SW: SEMCAD, V1.8 Build 186

Pin=250mW/Area Scan (61x61x1): Measurement grid: dx=15mm, dy=15mm
Maximum value of SAR (interpolated) = 3.15 mW/g

Pin=250mW/Zoom Scan (5x5x7)/Cube 0: Measurement grid: dx=8mm, dy=8mm, dz=5mm
Reference Value = 60.2 V/m; Power Drift = 0.004 dB
Peak SAR (extrapolated) = 3.73 W/kg
SAR(1 g) = 2.47 mW/g; SAR(10 g) = 1.59 mW/g
Maximum value of SAR (measured) = 3.12 mW/g

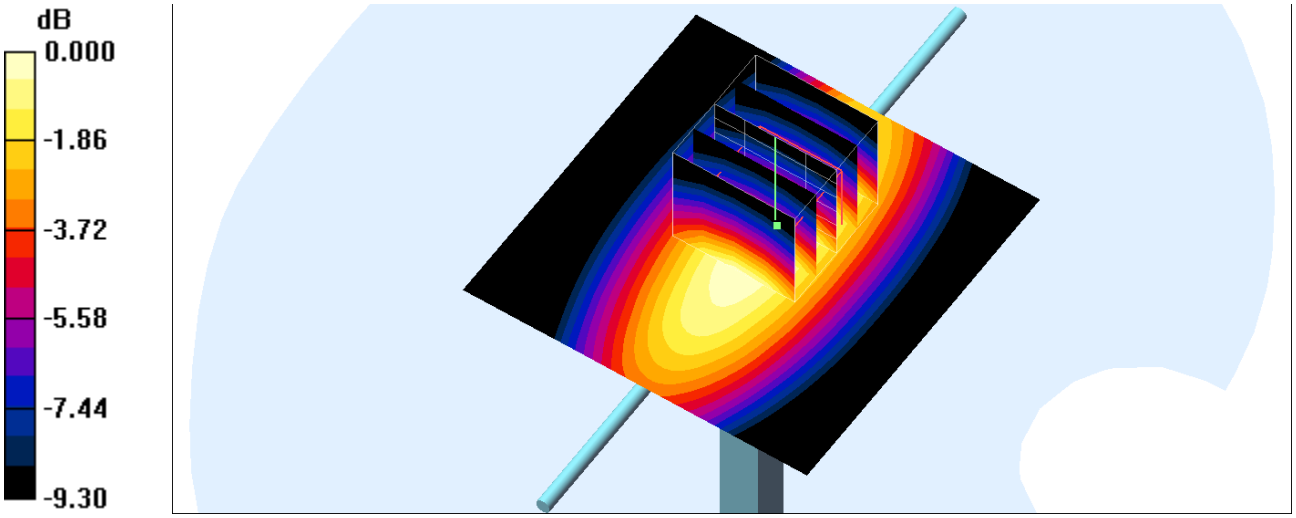

0 dB = 3.12mW/g

System Check_Body_835MHz_131221

DUT: D835V2-4d162

Communication System: CW; Frequency: 835 MHz;Duty Cycle: 1:1
Medium: MSL_850_131221 Medium parameters used: f = 835 MHz; σ = 0.963 mho/m; ε_r = 54.5; ρ = 1000 kg/m^3
Ambient Temperature：23.6 ℃； Liquid Temperature：22.6 ℃

DASY4 Configuration:
- Probe: EX3DV4 - SN3935; ConvF(10.09, 10.09, 10.09); Calibrated: 2013/11/4
- Sensor-Surface: 2mm (Mechanical Surface Detection)
- Electronics: DAE4 Sn1338; Calibrated: 2013/11/5
- Phantom: SAM_Right; Type: SAM; Serial: TP-1303
- Measurement SW: DASY4, V4.7 Build 80; Postprocessing SW: SEMCAD, V1.8 Build 186

Pin=250mW/Area Scan (61x61x1): Measurement grid: dx=15mm, dy=15mm
Maximum value of SAR (interpolated) = 3.08 mW/g

Pin=250mW/Zoom Scan (5x5x7)/Cube 0: Measurement grid: dx=8mm, dy=8mm, dz=5mm
Reference Value = 56.2 V/m; Power Drift = -0.019 dB
Peak SAR (extrapolated) = 3.58 W/kg
SAR(1 g) = 2.41 mW/g; SAR(10 g) = 1.59 mW/g
Maximum value of SAR (measured) = 3.03 mW/g

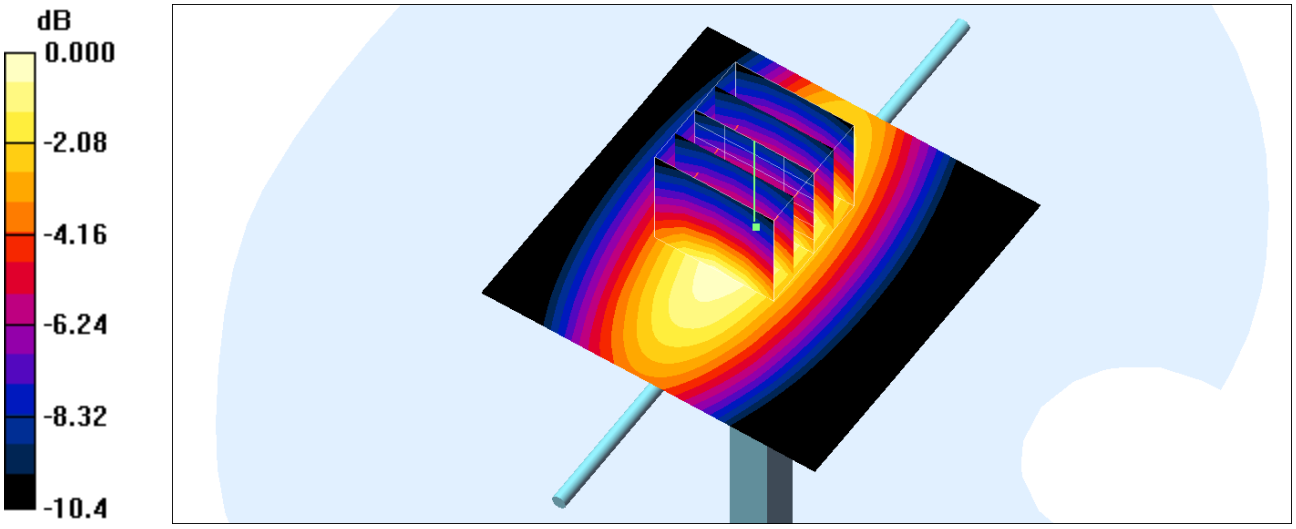

0 dB = 3.03mW/g

System Check_Body_835MHz_131222

DUT: D835V2-4d162

Communication System: CW; Frequency: 835 MHz;Duty Cycle: 1:1
Medium: MSL_850_131222 Medium parameters used: f = 835 MHz; σ = 0.972 mho/m; ε_r = 53; ρ = 1000 kg/m^3
Ambient Temperature：23.6 ℃； Liquid Temperature：22.6 ℃

DASY4 Configuration:
- Probe: EX3DV4 - SN3935; ConvF(10.09, 10.09, 10.09); Calibrated: 2013/11/4
- Sensor-Surface: 2mm (Mechanical Surface Detection)
- Electronics: DAE4 Sn1338; Calibrated: 2013/11/5
- Phantom: SAM_Right; Type: SAM; Serial: TP-1303
- Measurement SW: DASY4, V4.7 Build 80; Postprocessing SW: SEMCAD, V1.8 Build 186

Pin=250mW/Area Scan (61x61x1): Measurement grid: dx=15mm, dy=15mm
Maximum value of SAR (interpolated) = 3.11 mW/g

Pin=250mW/Zoom Scan (5x5x7)/Cube 0: Measurement grid: dx=8mm, dy=8mm, dz=5mm
Reference Value = 56.2 V/m; Power Drift = -0.019 dB
Peak SAR (extrapolated) = 3.61 W/kg
SAR(1 g) = 2.44 mW/g; SAR(10 g) = 1.61 mW/g
Maximum value of SAR (measured) = 3.06 mW/g

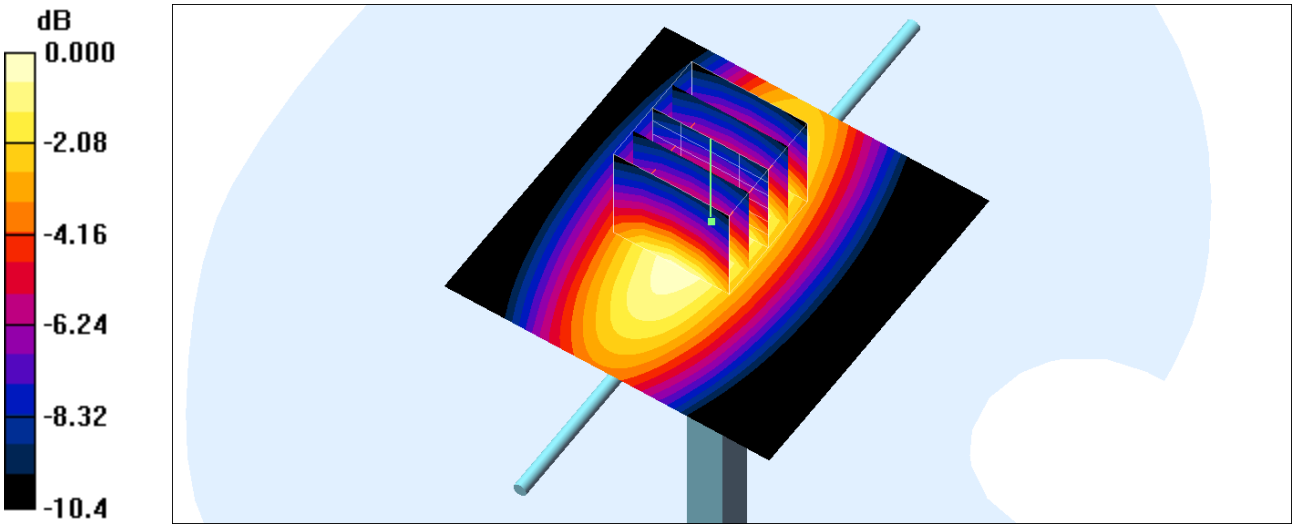

0 dB = 3.06mW/g

System Check_Head_1750MHz_131228

DUT: D1750V2-1068

Communication System: CW; Frequency: 1750 MHz;Duty Cycle: 1:1
Medium: HSL_1750_131228 Medium parameters used: f = 1750 MHz; σ = 1.426 S/m; ε_r = 39.341; ρ = 1000 kg/m^3
Ambient Temperature：23.5 ℃； Liquid Temperature：22.5 ℃

DASY5 Configuration:
- Probe: EX3DV4 - SN3935; ConvF(8.54, 8.54, 8.54); Calibrated: 2013/11/4;
- Sensor-Surface: 2mm (Mechanical Surface Detection)
- Electronics: DAE4 Sn1338; Calibrated: 2013/11/5
- Phantom: SAM Right; Type: QD000P40CD; Serial: TP:1644
- Measurement SW: DASY52, Version 52.8 (6); SEMCAD X Version 14.6.9 (7117)

Configuration/Pin=250mW/Area Scan (61x61x1): Interpolated grid: dx=1.500 mm, dy=1.500 mm
Maximum value of SAR (interpolated) = 15.2 W/kg

Configuration/Pin=250mW/Zoom Scan (5x5x7)/Cube 0: Measurement grid: dx=8mm, dy=8mm, dz=5mm
Reference Value = 98.158 V/m; Power Drift = 0.03 dB
Peak SAR (extrapolated) = 18.1 W/kg
SAR(1 g) = 9.9 W/kg; SAR(10 g) = 5.19 W/kg
Maximum value of SAR (measured) = 13.8 W/kg

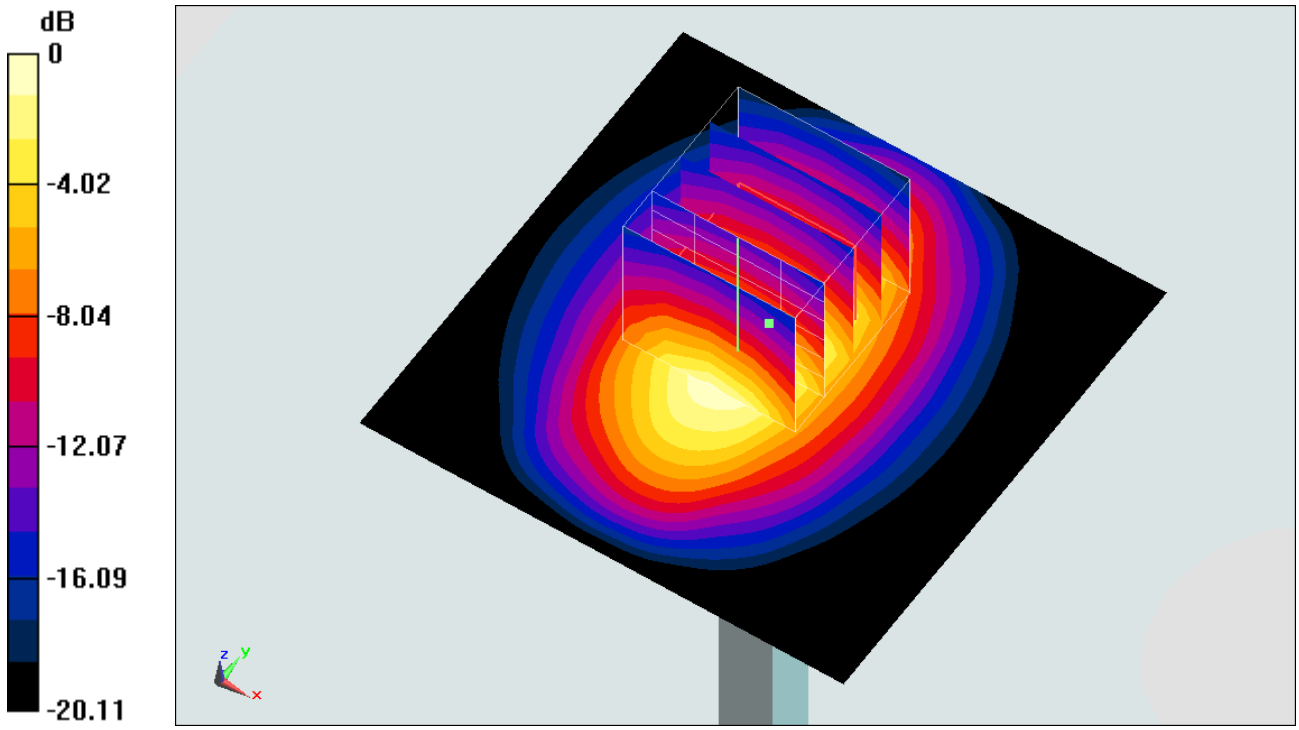

0 dB = 13.8 W/kg = 11.40 dBW/kg

System Check_Body_1750MHz_131226

DUT: D1750V2-SN:1068

Communication System: CW; Frequency: 1750 MHz;Duty Cycle: 1:1
Medium: MSL_1750_131226 Medium parameters used: f = 1750 MHz; σ = 1.528 S/m; ε_r = 51.762; ρ = 1000 kg/m^3
Ambient Temperature：23.2 ℃； Liquid Temperature：22.2 ℃

DASY5 Configuration:
- Probe: EX3DV4 - SN3935; ConvF(8.3, 8.3, 8.3); Calibrated: 2013/11/4;
- Sensor-Surface: 2mm (Mechanical Surface Detection)
- Electronics: DAE4 Sn1279; Calibrated: 2013/1/28
- Phantom: SAM Right; Type: QD000P40CD; Serial: TP:1644
- Measurement SW: DASY52, Version 52.8 (6); SEMCAD X Version 14.6.9 (7117)

Configuration/Pin=250mW/Area Scan (61x61x1): Interpolated grid: dx=1.500 mm, dy=1.500 mm
Maximum value of SAR (interpolated) = 12.9 W/kg

Configuration/Pin=250mW/Zoom Scan (5x5x7)/Cube 0: Measurement grid: dx=8mm, dy=8mm, dz=5mm
Reference Value = 93.055 V/m; Power Drift = -0.06 dB
Peak SAR (extrapolated) = 15.9 W/kg
SAR(1 g) = 9.2 W/kg; SAR(10 g) = 4.94 W/kg
Maximum value of SAR (measured) = 12.9 W/kg

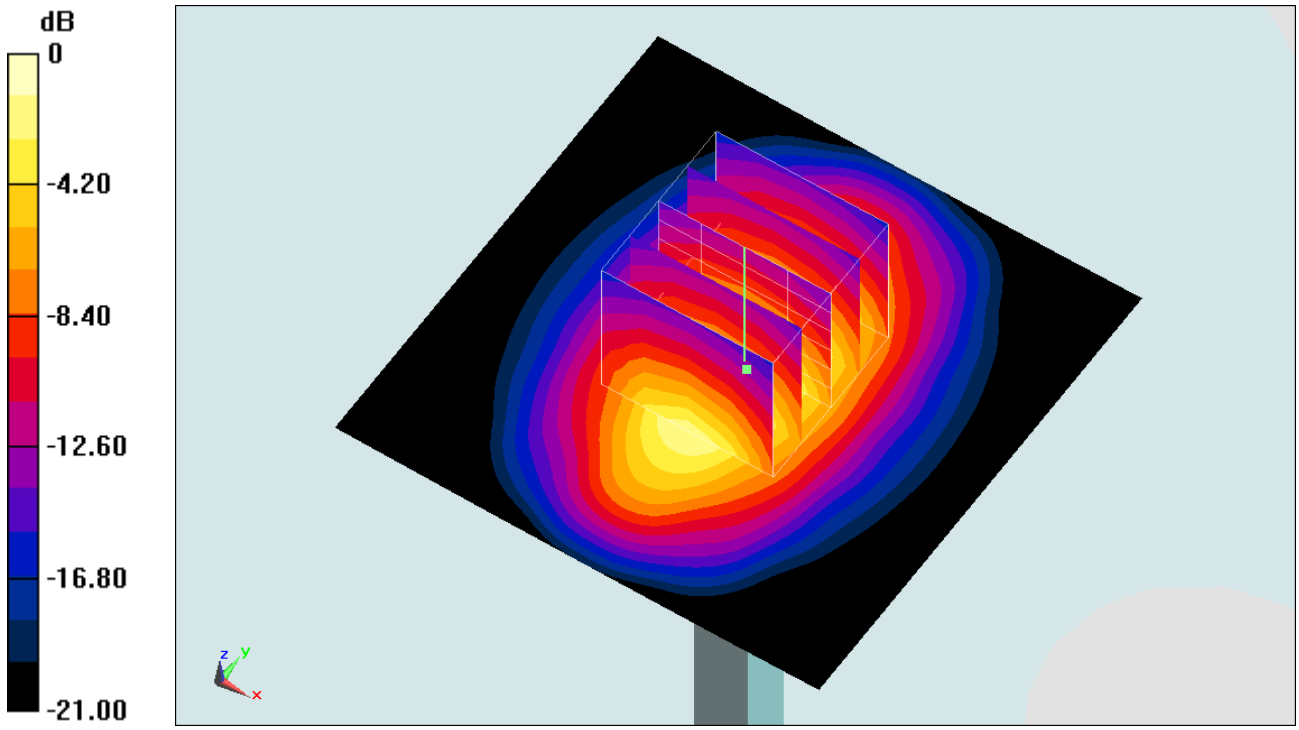

0 dB = 12.9 W/kg = 11.11 dBW/kg

System Check_Body_1750MHz_131226

DUT: D1750V2-SN:1068

Communication System: CW; Frequency: 1750 MHz;Duty Cycle: 1:1
Medium: MSL_1750_131226 Medium parameters used: f = 1750 MHz; σ = 1.479 S/m; ε_r = 52.368; ρ = 1000 kg/m^3
Ambient Temperature：23.2 ℃； Liquid Temperature：22.2 ℃

DASY5 Configuration:
- Probe: EX3DV4 - SN3935; ConvF(8.3, 8.3, 8.3); Calibrated: 2013/11/4;
- Sensor-Surface: 2mm (Mechanical Surface Detection)
- Electronics: DAE4 Sn1338; Calibrated: 2013/11/5
- Phantom: SAM Right; Type: QD000P40CD; Serial: TP:1644
- Measurement SW: DASY52, Version 52.8 (6); SEMCAD X Version 14.6.9 (7117)

Configuration/Pin=250mW/Area Scan (61x61x1): Interpolated grid: dx=1.500 mm, dy=1.500 mm
Maximum value of SAR (interpolated) = 12.5 W/kg

Configuration/Pin=250mW/Zoom Scan (5x5x7)/Cube 0: Measurement grid: dx=8mm, dy=8mm, dz=5mm
Reference Value = 92.981 V/m; Power Drift = -0.06 dB
Peak SAR (extrapolated) = 15.4 W/kg
SAR(1 g) = 8.9 W/kg; SAR(10 g) = 4.78 W/kg
Maximum value of SAR (measured) = 12.5 W/kg

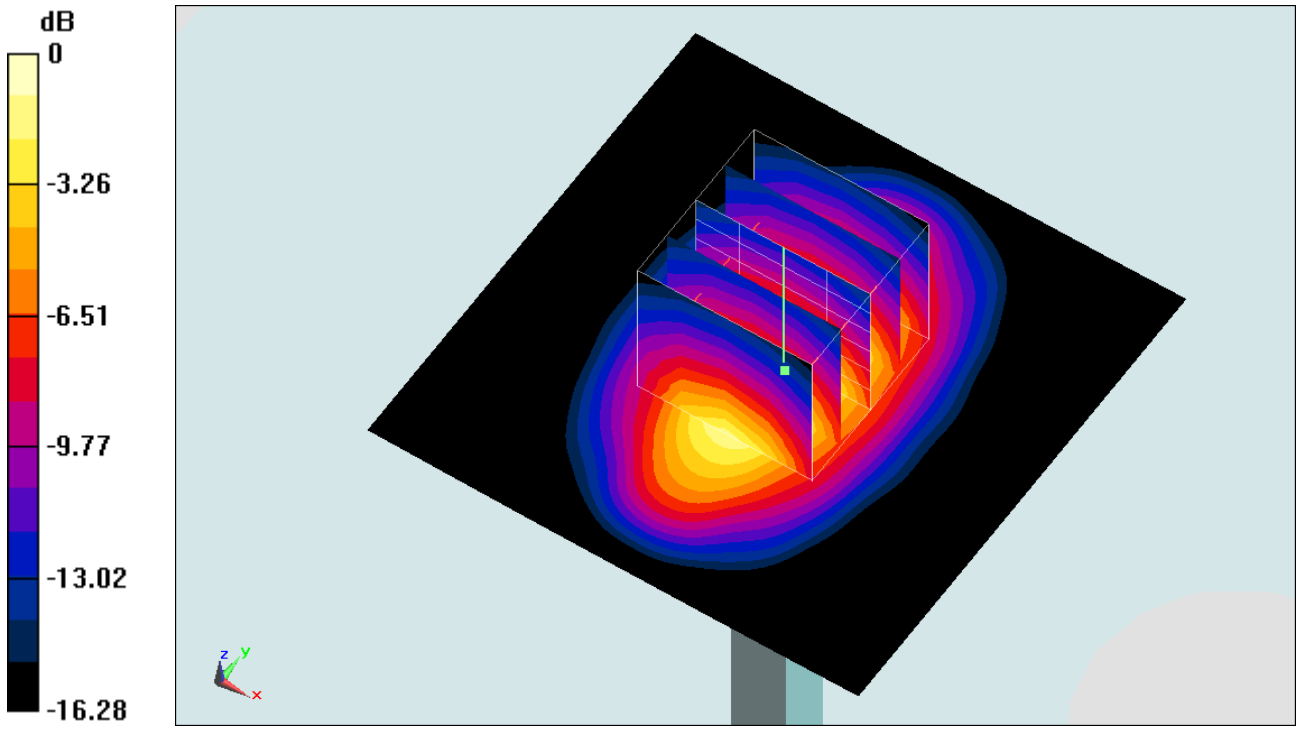

0 dB = 12.5 W/kg = 10.97 dBW/kg

System Check_Body_1750MHz_131229

DUT: D1750V2-1068

Communication System: CW ; Frequency: 1750 MHz;Duty Cycle: 1:1
Medium: MSL_1750_131229 Medium parameters used: f = 1750 MHz; σ = 1.514 S/m; ε_r = 52.223; ρ = 1000 kg/m^3
Ambient Temperature：23.4 ℃； Liquid Temperature：22.4 ℃

DASY5 Configuration:
- Probe: EX3DV4 - SN3931; ConvF(7.99, 7.99, 7.99); Calibrated: 2013/9/10;
- Sensor-Surface: 2mm (Mechanical Surface Detection)
- Electronics: DAE3 Sn577; Calibrated: 2013/5/8
- Phantom: SAM-Left; Type: QD 000 P40 C; Serial: TP-1478
- Measurement SW: DASY52, Version 52.8 (7); SEMCAD X Version 14.6.10 (7164)

Configuration/Pin=250mW/Area Scan (61x61x1): Interpolated grid: dx=1.500 mm, dy=1.500 mm
Maximum value of SAR (interpolated) = 13.6 W/kg

Configuration/Pin=250mW/Zoom Scan (5x5x7)/Cube 0: Measurement grid: dx=8mm, dy=8mm, dz=5mm
Reference Value = 93.298 V/m; Power Drift = -0.00 dB
Peak SAR (extrapolated) = 16.8 W/kg
SAR(1 g) = 9.17 W/kg; SAR(10 g) = 4.73 W/kg
Maximum value of SAR (measured) = 12.7 W/kg

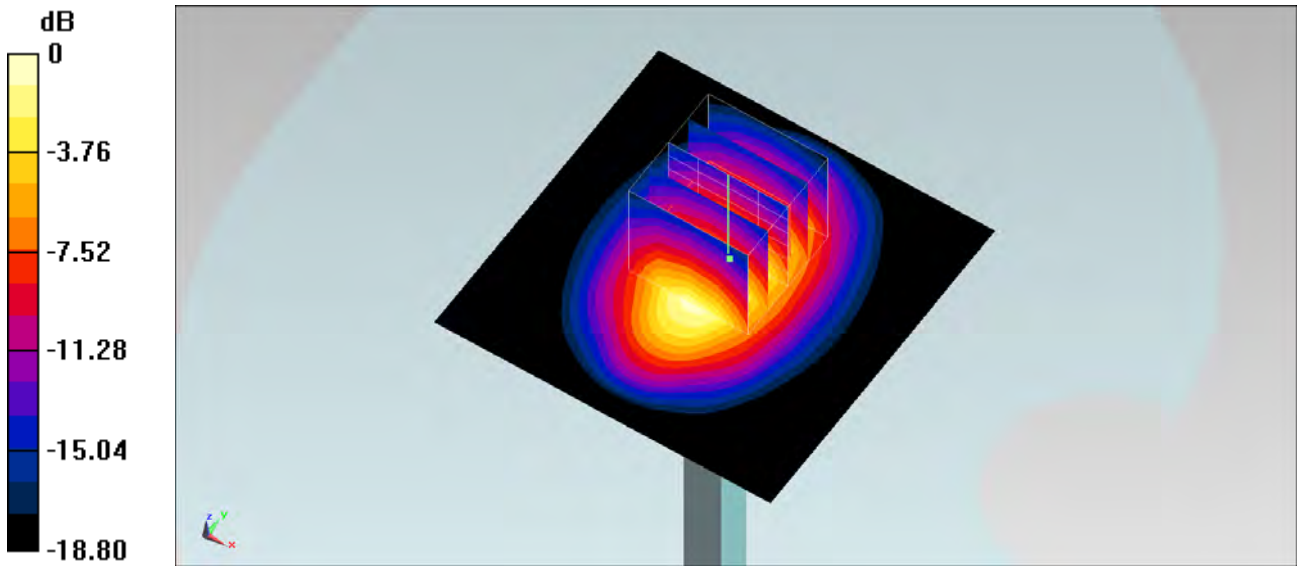

0 dB = 12.7 W/kg = 11.04 dBW/kg

System Check_Head_1900MHz_131229

DUT: D1900V2-5d182

Communication System: CW; Frequency: 1900 MHz;Duty Cycle: 1:1
Medium: HSL_1900_131229 Medium parameters used: f = 1900 MHz; σ = 1.388 S/m; ε_r = 40.3; ρ = 1000 kg/m^3
Ambient Temperature：23.4 ℃； Liquid Temperature：22.4 ℃

DASY5 Configuration:
- Probe: EX3DV4 - SN3931; ConvF(8.4, 8.4, 8.4); Calibrated: 2013/9/10;
- Sensor-Surface: 2mm (Mechanical Surface Detection)
- Electronics: DAE3 Sn577; Calibrated: 2013/5/8
- Phantom: SAM-Right; Type: QD 000 P40 C; Serial: TP-1446
- Measurement SW: DASY52, Version 52.8 (7); SEMCAD X Version 14.6.10 (7164)

Configuration/Pin=250mW/Area Scan (61x61x1): Interpolated grid: dx=1.500 mm, dy=1.500 mm
Maximum value of SAR (interpolated) = 15.6 W/kg

Configuration/Pin=250mW/Zoom Scan (5x5x7)/Cube 0: Measurement grid: dx=8mm, dy=8mm, dz=5mm
Reference Value = 104.4 V/m; Power Drift = 0.01 dB
Peak SAR (extrapolated) = 18.9 W/kg
SAR(1 g) = 10.1 W/kg; SAR(10 g) = 5.19 W/kg
Maximum value of SAR (measured) = 14.2 W/kg

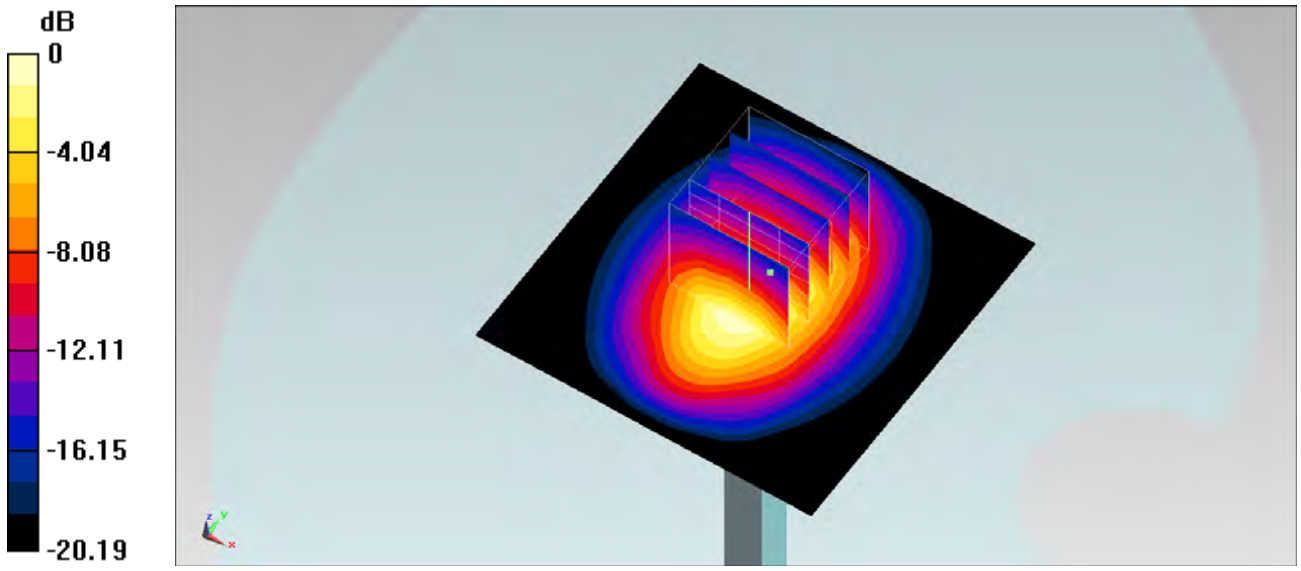

0 dB = 14.2 W/kg = 11.52 dBW/kg

System Check_Head_1900MHz_140104

DUT: D1900V2-SN:5d182

Communication System: CW; Frequency: 1900 MHz;Duty Cycle: 1:1
Medium: HSL_1900_140104 Medium parameters used: f = 1900 MHz; σ = 1.44 mho/m; ε_r = 38.1; ρ = 1000 kg/m^3

Ambient Temperature：23.6 ℃; Liquid Temperature：22.6 ℃

DASY4 Configuration:
- Probe: EX3DV4 - SN3931; ConvF(8.4, 8.4, 8.4); Calibrated: 2013/9/10
- Sensor-Surface: 2mm (Mechanical Surface Detection)
- Electronics: DAE4 Sn1279; Calibrated: 2013/1/28
- Phantom: SAM_Right; Type: SAM; Serial: TP-1303
- Measurement SW: DASY4, V4.7 Build 80; Postprocessing SW: SEMCAD, V1.8 Build 186

Pin=250mW/Area Scan (61x61x1): Measurement grid: dx=15mm, dy=15mm
Maximum value of SAR (interpolated) = 16.2 mW/g

Pin=250mW/Zoom Scan (5x5x7)/Cube 0: Measurement grid: dx=8mm, dy=8mm, dz=5mm
Reference Value = 104.6 V/m; Power Drift = 0.008 dB
Peak SAR (extrapolated) = 19.7 W/kg
SAR(1 g) = 10.5 mW/g; SAR(10 g) = 5.39 mW/g
Maximum value of SAR (measured) = 14.7 mW/g

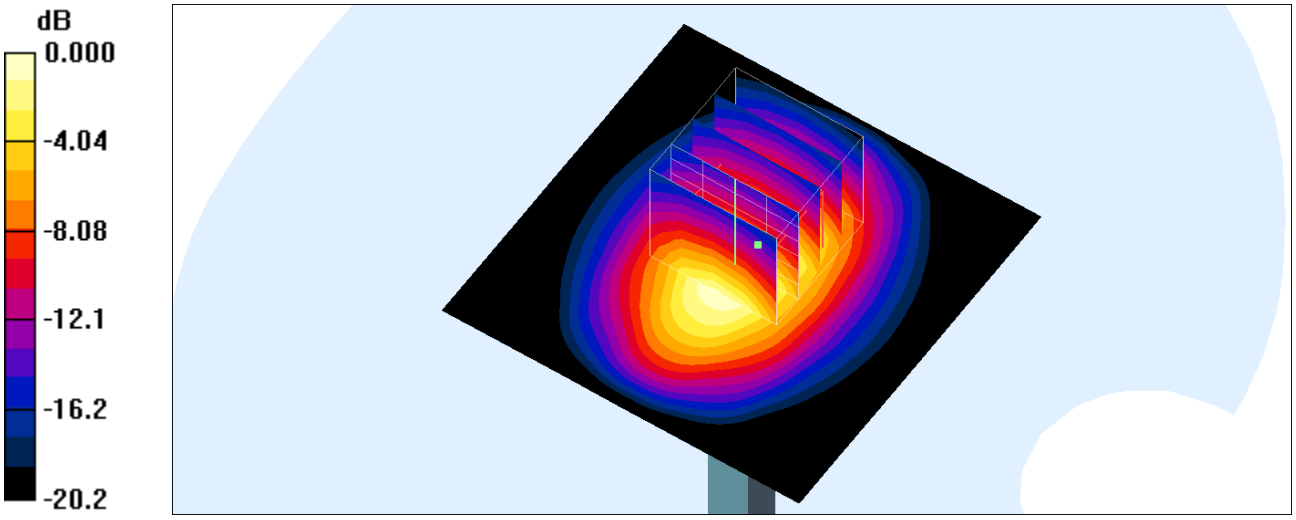

0 dB = 14.7mW/g

System Check_Head_1900MHz_140326

DUT: D1900V2-SN:5d182

Communication System: CW; Frequency: 1900 MHz;Duty Cycle: 1:1
Medium: HSL_1900_140326 Medium parameters used: f = 1900 MHz; σ = 1.432 S/m; ε_r = 38.828; ρ = 1000 kg/m^3
Ambient Temperature：23.6 ℃； Liquid Temperature：22.6 ℃

DASY5 Configuration:
- Probe: ES3DV3 - SN3270; ConvF(5.08, 5.08, 5.08); Calibrated: 2013/9/24;
- Sensor-Surface: 3mm (Mechanical Surface Detection)
- Electronics: DAE4 Sn778; Calibrated: 2013/8/21
- Phantom: SAM RIGHT; Type: SAM; Serial: 1719
- Measurement SW: DASY52, Version 52.8 (6); SEMCAD X Version 14.6.9 (7117)

Configuration/Pin=250mW/Area Scan (61x61x1): Interpolated grid: dx=1.500 mm, dy=1.500 mm
Maximum value of SAR (interpolated) = 12.1 W/kg

Configuration/Pin=250mW/Zoom Scan (5x5x7)/Cube 0: Measurement grid: dx=8mm, dy=8mm, dz=5mm
Reference Value = 91.554 V/m; Power Drift = -0.00 dB
Peak SAR (extrapolated) = 15.7 W/kg
SAR(1 g) = 9.7 W/kg; SAR(10 g) = 5.44 W/kg
Maximum value of SAR (measured) = 11.9 W/kg

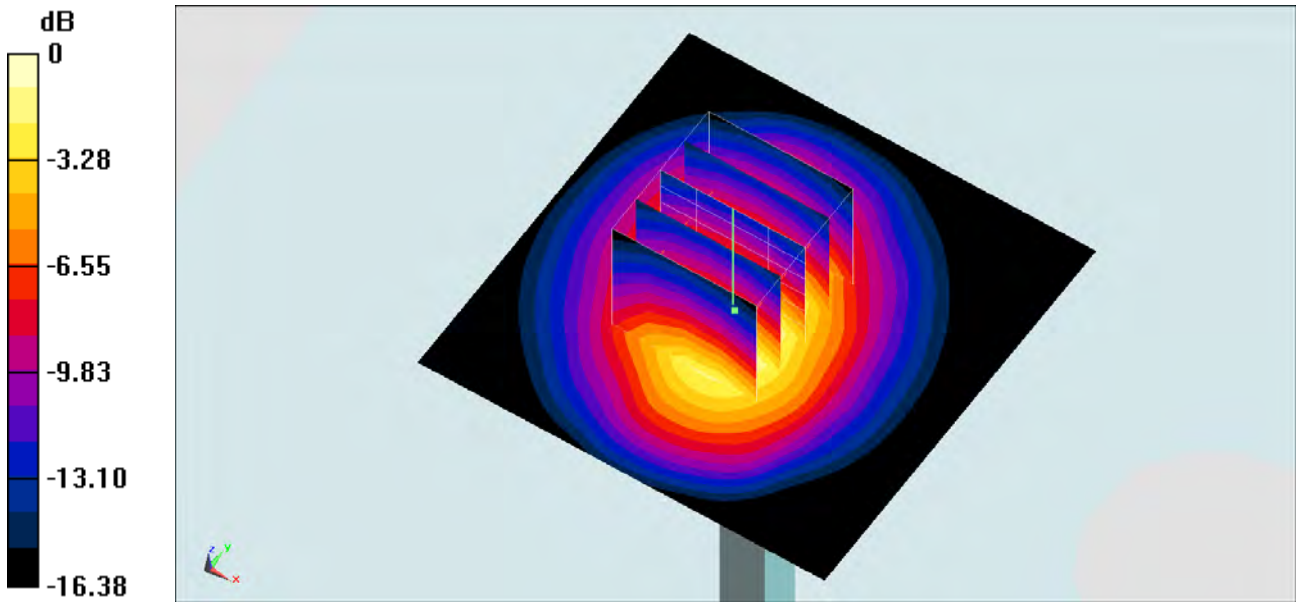

0 dB = 11.9 W/kg = 10.76 dBW/kg

System Check_Body_1900MHz_131229

DUT: D1900V2-5d182

Communication System: CW; Frequency: 1900 MHz;Duty Cycle: 1:1
Medium: MSL_1900_131229 Medium parameters used: f = 1900 MHz; σ = 1.531 S/m; ε_r = 52.652; ρ = 1000 kg/m^3
Ambient Temperature：23.4 ℃； Liquid Temperature：22.4 ℃

DASY5 Configuration:
- Probe: EX3DV4 - SN3931; ConvF(7.61, 7.61, 7.61); Calibrated: 2013/9/10;
- Sensor-Surface: 2mm (Mechanical Surface Detection)
- Electronics: DAE3 Sn577; Calibrated: 2013/5/8
- Phantom: SAM-Left; Type: QD 000 P40 C; Serial: TP-1478
- Measurement SW: DASY52, Version 52.8 (7); SEMCAD X Version 14.6.10 (7164)

Configuration/Pin=250mW/Area Scan (61x61x1): Interpolated grid: dx=1.500 mm, dy=1.500 mm
Maximum value of SAR (interpolated) = 14.3 W/kg

Configuration/Pin=250mW/Zoom Scan (5x5x7)/Cube 0: Measurement grid: dx=8mm, dy=8mm, dz=5mm
Reference Value = 95.599 V/m; Power Drift = -0.00 dB
Peak SAR (extrapolated) = 17.7 W/kg
SAR(1 g) = 9.7 W/kg; SAR(10 g) = 5 W/kg
Maximum value of SAR (measured) = 13.4 W/kg

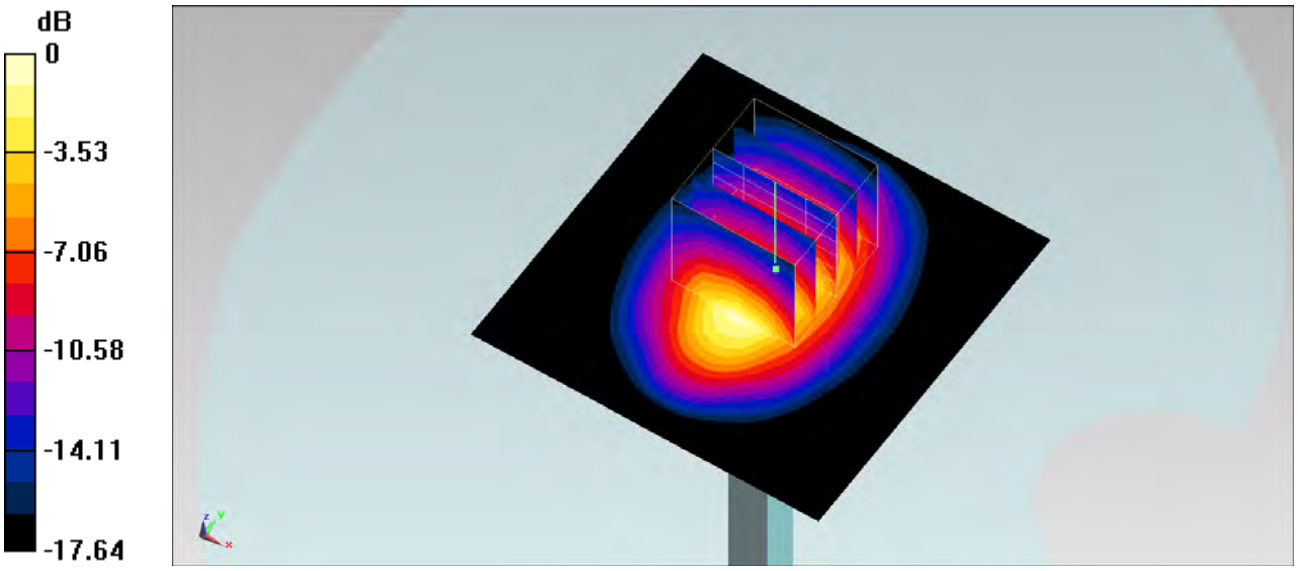

0 dB = 13.4 W/kg = 11.27 dBW/kg

System Check_Body_1900MHz_140102

DUT: D1900V2-5d182

Communication System: CW; Frequency: 1900 MHz;Duty Cycle: 1:1
Medium: MSL_1900_140102 Medium parameters used: f = 1900 MHz; σ = 1.53 mho/m; ε_r = 52.7; ρ = 1000 kg/m^3
Ambient Temperature：23.4 ℃； Liquid Temperature：22.4 ℃

DASY4 Configuration:
- Probe: EX3DV4 - SN3954; ConvF(7.95, 7.95, 7.95); Calibrated: 2013/11/4
- Sensor-Surface: 2mm (Mechanical Surface Detection)
- Electronics: DAE4 Sn1279; Calibrated: 2013/1/28
- Phantom: SAM_Right; Type: SAM; Serial: TP-1303
- Measurement SW: DASY4, V4.7 Build 80; Postprocessing SW: SEMCAD, V1.8 Build 186

Pin=250mW/Area Scan (61x61x1): Measurement grid: dx=15mm, dy=15mm
Maximum value of SAR (interpolated) = 14.3 mW/g

Pin=250mW/Zoom Scan (5x5x7)/Cube 0: Measurement grid: dx=8mm, dy=8mm, dz=5mm
Reference Value = 96.2 V/m; Power Drift = 0.013 dB
Peak SAR (extrapolated) = 18.0 W/kg
SAR(1 g) = 10.2 mW/g; SAR(10 g) = 5.36 mW/g
Maximum value of SAR (measured) = 14.3 mW/g

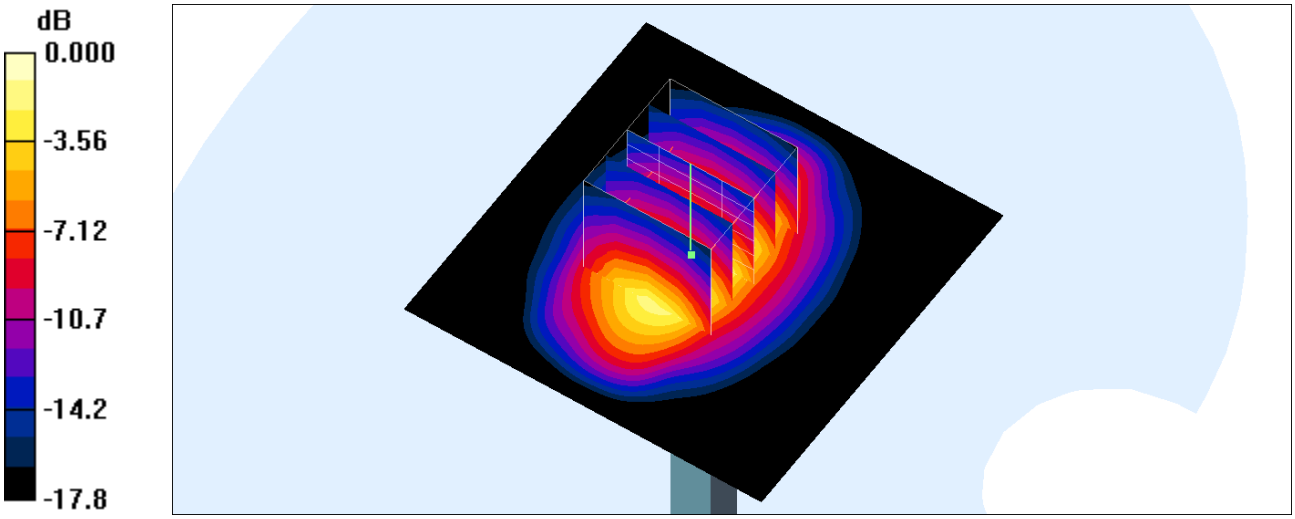

0 dB = 14.3mW/g

System Check_Body_1900MHz_140104

DUT: D1900V2-SN:5d182

Communication System: CW; Frequency: 1900 MHz;Duty Cycle: 1:1
Medium: MSL_1900_140104 Medium parameters used: f = 1900 MHz; σ = 1.53 mho/m; ε_r = 52.5; ρ = 1000 kg/m^3
Ambient Temperature：23.6 ℃; Liquid Temperature：22.6 ℃

DASY4 Configuration:
- Probe: EX3DV4 - SN3931; ConvF(7.61, 7.61, 7.61); Calibrated: 2013/9/10
- Sensor-Surface: 2mm (Mechanical Surface Detection)
- Electronics: DAE4 Sn1279; Calibrated: 2013/1/28
- Phantom: SAM_Right; Type: SAM; Serial: TP-1303
- Measurement SW: DASY4, V4.7 Build 80; Postprocessing SW: SEMCAD, V1.8 Build 186

Pin=250mW/Area Scan (61x61x1): Measurement grid: dx=15mm, dy=15mm
Maximum value of SAR (interpolated) = 15.5 mW/g

Pin=250mW/Zoom Scan (5x5x7)/Cube 0: Measurement grid: dx=8mm, dy=8mm, dz=5mm
Reference Value = 98.7 V/m; Power Drift = -0.017 dB
Peak SAR (extrapolated) = 19.0 W/kg
SAR(1 g) = 10.4 mW/g; SAR(10 g) = 5.38 mW/g
Maximum value of SAR (measured) = 14.5 mW/g

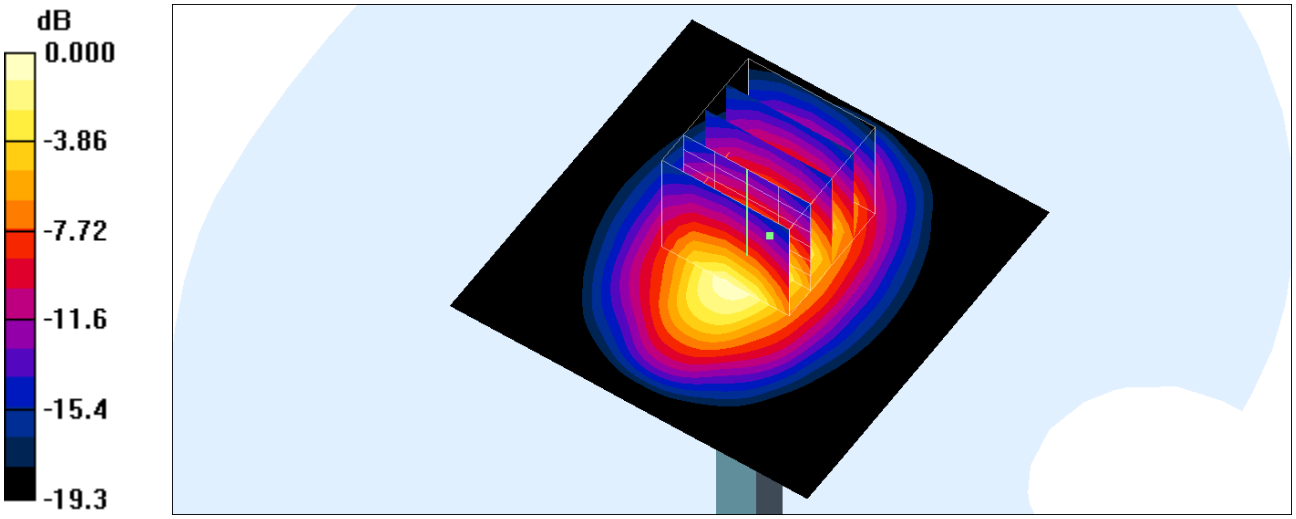

0 dB = 14.5mW/g

Test Laboratory: Sporton International Inc. SAR/HAC Testing Lab Date: 2014/3/20

System Check_Body_1900MHz_140320

DUT: D1900V2-SN:5d182

Communication System: CW; Frequency: 1900 MHz;Duty Cycle: 1:1
Medium: MSL_1900_140320 Medium parameters used: f = 1900 MHz; σ = 1.568 S/m; ε_r = 51.57; ρ = 1000 kg/m^3
Ambient Temperature：23.6 ℃； Liquid Temperature：22.6 ℃

DASY5 Configuration:
- Probe: EX3DV4 - SN3955; ConvF(8.17, 8.17, 8.17); Calibrated: 2013/12/23;
- Sensor-Surface: 2mm (Mechanical Surface Detection)
- Electronics: DAE4 Sn1399; Calibrated: 2013/11/7
- Phantom: SAM RIGHT; Type: SAM; Serial: 1719
- Measurement SW: DASY52, Version 52.8 (7); SEMCAD X Version 14.6.10 (7164)

Configuration/Pin=250mW/Area Scan (61x61x1): Interpolated grid: dx=1.500 mm, dy=1.500 mm
Maximum value of SAR (interpolated) = 13.9 W/kg

Configuration/Pin=250mW/Zoom Scan (5x5x7)/Cube 0: Measurement grid: dx=8mm, dy=8mm, dz=5mm
Reference Value = 90.014 V/m; Power Drift = 0.13 dB
Peak SAR (extrapolated) = 16.7 W/kg
SAR(1 g) = 10.1 W/kg; SAR(10 g) = 5.45 W/kg
Maximum value of SAR (measured) = 13.7 W/kg

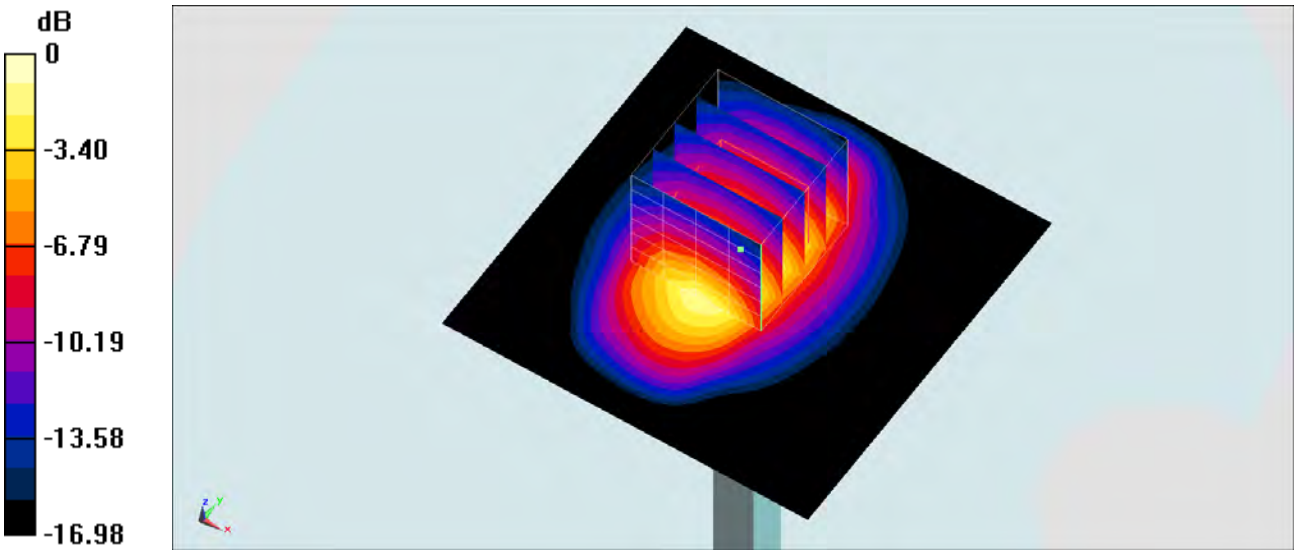

0 dB = 13.7 W/kg = 11.37 dBW/kg

System Check_Body_1900MHz_140326

DUT: D1900V2-SN:5d182

Communication System: CW; Frequency: 1900 MHz;Duty Cycle: 1:1
Medium: MSL_1900_140326 Medium parameters used: f = 1900 MHz; σ = 1.534 S/m; ε_r = 51.604; ρ = 1000 kg/m^3
Ambient Temperature：23.6 ℃； Liquid Temperature：22.6 ℃

DASY5 Configuration:
- Probe: ES3DV3 - SN3270; ConvF(4.71, 4.71, 4.71); Calibrated: 2013/9/24;
- Sensor-Surface: 3mm (Mechanical Surface Detection)
- Electronics: DAE4 Sn778; Calibrated: 2013/8/21
- Phantom: SAM LEFT; Type: QD000P40CD; Serial: TP:1718
- Measurement SW: DASY52, Version 52.8 (6); SEMCAD X Version 14.6.9 (7117)

Configuration/Pin=250mW/Area Scan (61x61x1): Interpolated grid: dx=1.500 mm, dy=1.500 mm
Maximum value of SAR (interpolated) = 11.8 W/kg

Configuration/Pin=250mW/Zoom Scan (5x5x7)/Cube 0: Measurement grid: dx=8mm, dy=8mm, dz=5mm
Reference Value = 88.464 V/m; Power Drift = 0.00 dB
Peak SAR (extrapolated) = 15.2 W/kg
SAR(1 g) = 9.56 W/kg; SAR(10 g) = 5.36 W/kg
Maximum value of SAR (measured) = 11.7 W/kg

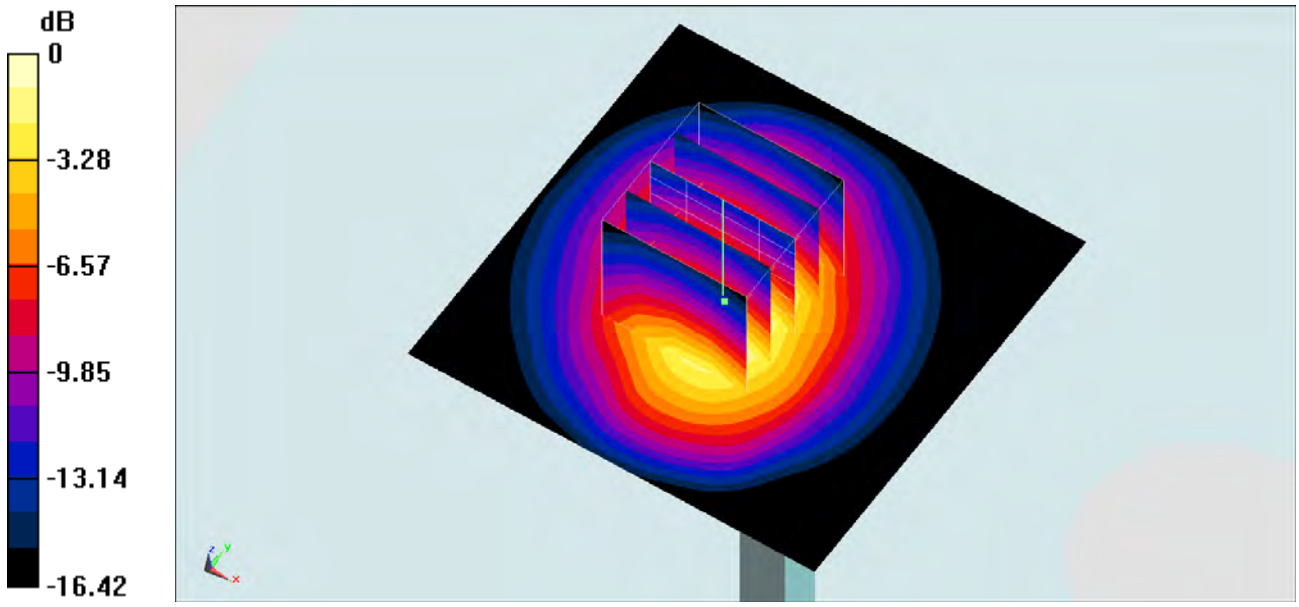

0 dB = 11.7 W/kg = 10.68 dBW/kg

System Check_Head_2450MHz_131219

DUT: D2450V2-SN:924

Communication System: CW; Frequency: 2450 MHz;Duty Cycle: 1:1
Medium: HSL_2450_131219 Medium parameters used: f = 2450 MHz; σ = 1.833 S/m; ε_r = 39.517; ρ = 1000 kg/m^3
Ambient Temperature：23.3 ℃； Liquid Temperature：22.3 ℃

DASY5 Configuration:
- Probe: EX3DV4 - SN3925; ConvF(7.25, 7.25, 7.25); Calibrated: 2013/6/12;
- Sensor-Surface: 2mm (Mechanical Surface Detection)
- Electronics: DAE3 Sn495; Calibrated: 2013/5/8
- Phantom: SAM-Right; Type: QD 000 P40 C; Serial: TP-1446
- Measurement SW: DASY52, Version 52.8 (7); SEMCAD X Version 14.6.10 (7164)

Configuration/Pin=250mW/Area Scan (61x61x1): Interpolated grid: dx=1.200 mm, dy=1.200 mm
Maximum value of SAR (interpolated) = 23.0 W/kg

Configuration/Pin=250mW/Zoom Scan (7x7x7)/Cube 0: Measurement grid: dx=5mm, dy=5mm, dz=5mm
Reference Value = 107.7 V/m; Power Drift = 0.01 dB
Peak SAR (extrapolated) = 29.8 W/kg
SAR(1 g) = 13.8 W/kg; SAR(10 g) = 6.39 W/kg
Maximum value of SAR (measured) = 21.2 W/kg

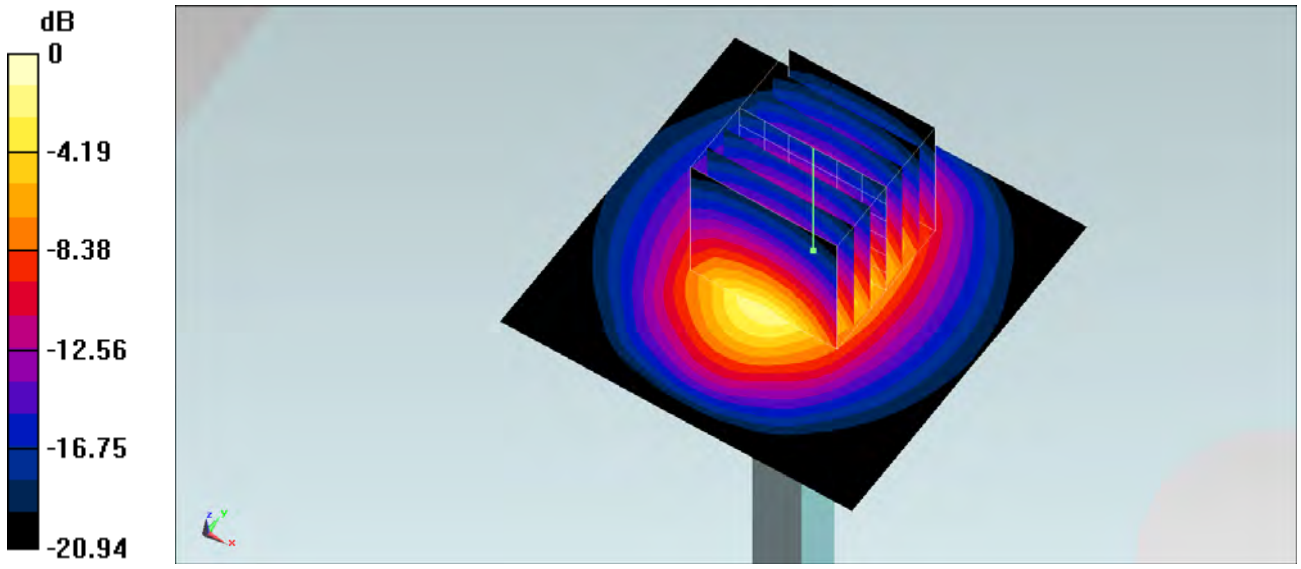

0 dB = 21.2 W/kg = 13.26 dBW/kg

System Check_Body_2450MHz_131219

DUT: D2450V2-SN:924

Communication System: CW; Frequency: 2450 MHz;Duty Cycle: 1:1
Medium: MSL_2450_131219 Medium parameters used: f = 2450 MHz; σ = 1.981 S/m; ε_r = 54.191; ρ = 1000 kg/m^3
Ambient Temperature：23.4 ℃； Liquid Temperature：22.4 ℃

DASY5 Configuration:
- Probe: EX3DV4 - SN3925; ConvF(7.44, 7.44, 7.44); Calibrated: 2013/6/12;
- Sensor-Surface: 2mm (Mechanical Surface Detection)
- Electronics: DAE3 Sn495; Calibrated: 2013/5/8
- Phantom: SAM-Left; Type: QD 000 P40 C; Serial: TP-1478
- Measurement SW: DASY52, Version 52.8 (7); SEMCAD X Version 14.6.10 (7164)

Configuration/Pin=250mW/Area Scan (61x61x1): Interpolated grid: dx=1.200 mm, dy=1.200 mm
Maximum value of SAR (interpolated) = 21.5 W/kg

Configuration/Pin=250mW/Zoom Scan (7x7x7)/Cube 0: Measurement grid: dx=5mm, dy=5mm, dz=5mm
Reference Value = 99.669 V/m; Power Drift = -0.13 dB
Peak SAR (extrapolated) = 27.1 W/kg
SAR(1 g) = 12.5 W/kg; SAR(10 g) = 5.79 W/kg
Maximum value of SAR (measured) = 19.2 W/kg

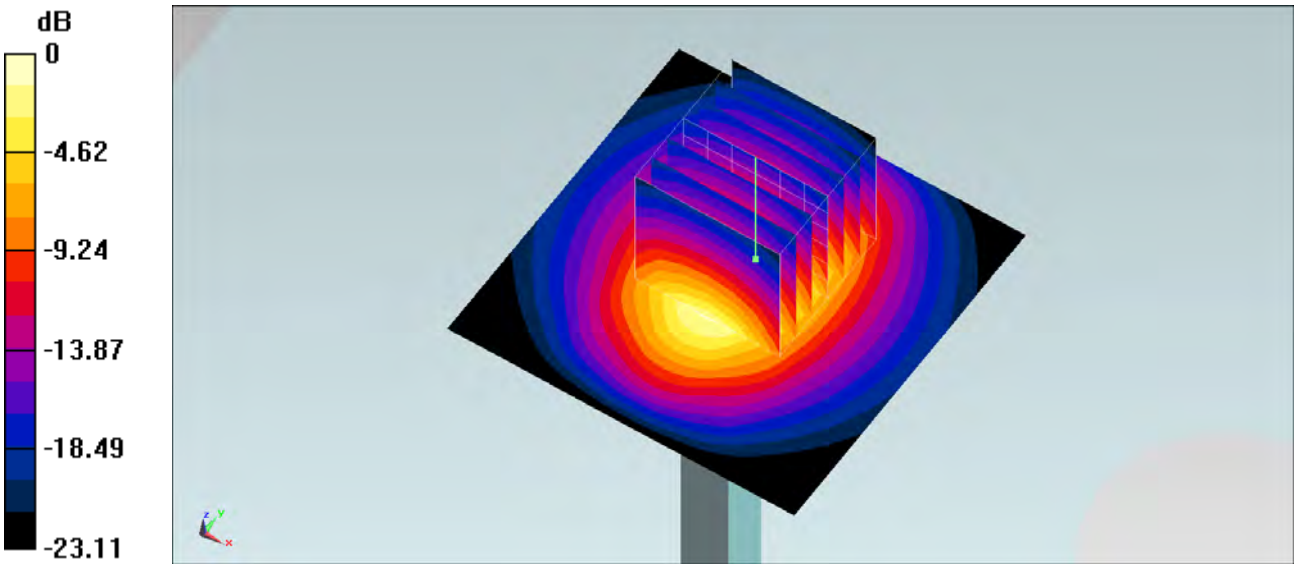

0 dB = 19.2 W/kg = 12.83 dBW/kg

System Check_Head_2600MHz_131228

DUT: D2600V2-SN:1070

Communication System: CW; Frequency: 2600 MHz;Duty Cycle: 1:1
Medium: HSL_2600_131228 Medium parameters used: f = 2600 MHz; σ = 1.997 S/m; ε_r = 37.624; ρ = 1000 kg/m^3
Ambient Temperature：23.2 ℃； Liquid Temperature：22.2 ℃

DASY5 Configuration:
- Probe: EX3DV4 - SN3935; ConvF(7.27, 7.27, 7.27); Calibrated: 2013/11/4;
- Sensor-Surface: 2mm (Mechanical Surface Detection)
- Electronics: DAE4 Sn1338; Calibrated: 2013/11/5
- Phantom: SAM Right; Type: QD000P40CD; Serial: TP:1644
- Measurement SW: DASY52, Version 52.8 (6); SEMCAD X Version 14.6.9 (7117)

Configuration/Pin=250mW/Area Scan (61x61x1): Interpolated grid: dx=1.200 mm, dy=1.200 mm
Maximum value of SAR (interpolated) = 25.6 W/kg

Configuration/Pin=250mW/Zoom Scan (7x7x7)/Cube 0: Measurement grid: dx=5mm, dy=5mm, dz=5mm
Reference Value = 108.0 V/m; Power Drift = -0.05 dB
Peak SAR (extrapolated) = 33.4 W/kg
SAR(1 g) = 15 W/kg; SAR(10 g) = 6.51 W/kg
Maximum value of SAR (measured) = 23.4 W/kg

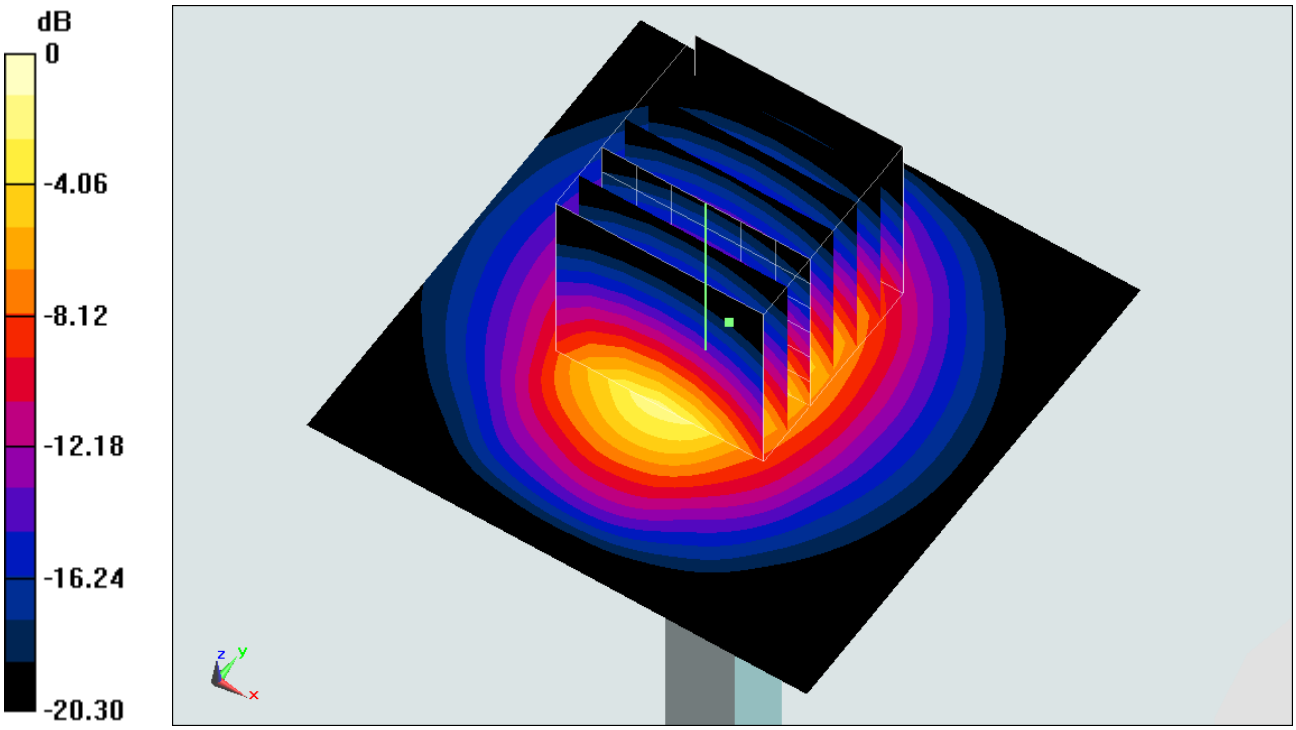

0 dB = 23.4 W/kg = 13.69 dBW/kg

System Check_Body_2600MHz_131225

DUT: D2600V2-SN:1070

Communication System: CW; Frequency: 2600 MHz;Duty Cycle: 1:1
Medium: MSL_2600_131225 Medium parameters used: f = 2600 MHz; σ = 2.184 S/m; ε_r = 53.787; ρ = 1000 kg/m^3
Ambient Temperature：23.5 ℃； Liquid Temperature：22.5 ℃

DASY5 Configuration:
- Probe: EX3DV4 - SN3935; ConvF(7.08, 7.08, 7.08); Calibrated: 2013/11/4;
- Sensor-Surface: 2mm (Mechanical Surface Detection)
- Electronics: DAE4 Sn1279; Calibrated: 2013/1/28
- Phantom: SAM Right; Type: QD000P40CD; Serial: TP:1644
- Measurement SW: DASY52, Version 52.8 (6); SEMCAD X Version 14.6.9 (7117)

Configuration/Pin=250mW/Area Scan (61x61x1): Interpolated grid: dx=1.200 mm, dy=1.200 mm
Maximum value of SAR (interpolated) = 23.7 W/kg

Configuration/Pin=250mW/Zoom Scan (7x7x7)/Cube 0: Measurement grid: dx=5mm, dy=5mm, dz=5mm
Reference Value = 101.7 V/m; Power Drift = 0.00 dB
Peak SAR (extrapolated) = 32.5 W/kg
SAR(1 g) = 13.9 W/kg; SAR(10 g) = 6.11 W/kg
Maximum value of SAR (measured) = 22.0 W/kg

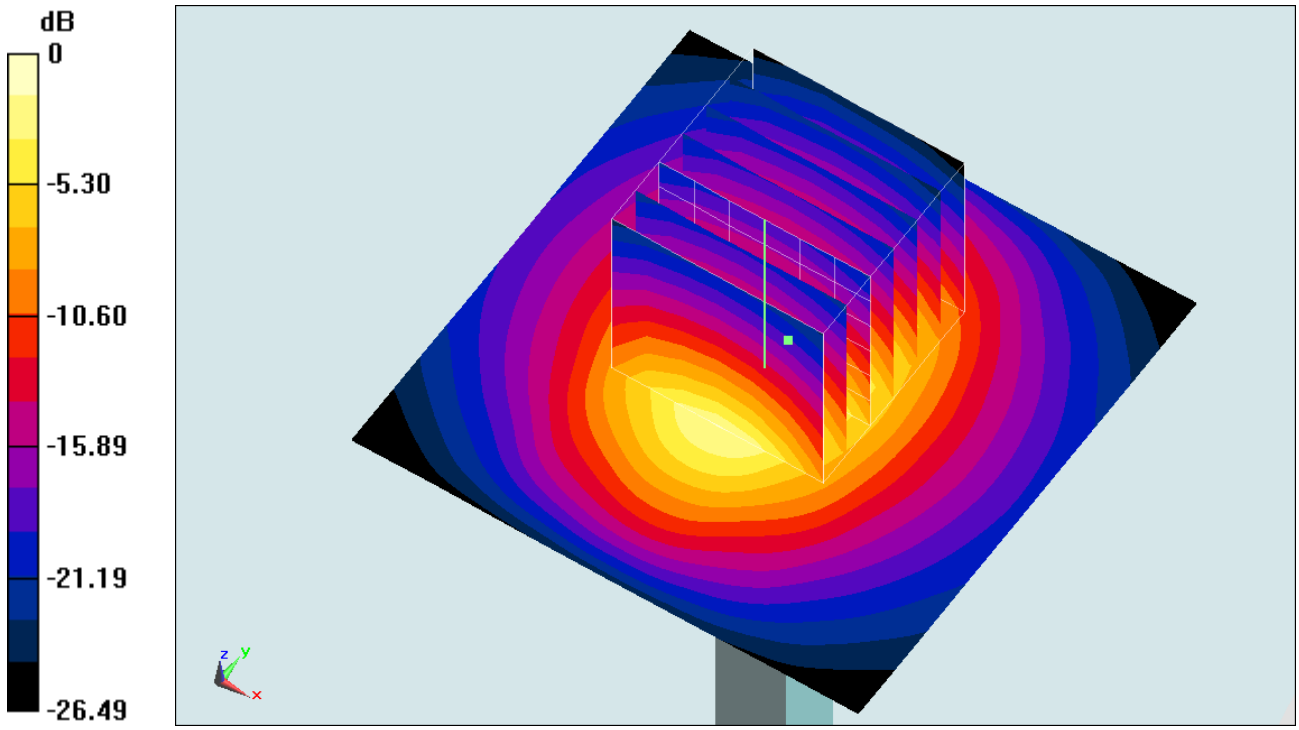

0 dB = 22.0 W/kg = 13.42 dBW/kg

System Check_Body_2600MHz_131226

DUT: D2600V2-SN:1070

Communication System: CW; Frequency: 2600 MHz;Duty Cycle: 1:1
Medium: MSL_2600_131226 Medium parameters used: f = 2600 MHz; σ = 2.201 S/m; ε_r = 52.823; ρ = 1000 kg/m^3
Ambient Temperature：23.5 ℃； Liquid Temperature：22.5 ℃

DASY5 Configuration:
- Probe: EX3DV4 - SN3935; ConvF(7.08, 7.08, 7.08); Calibrated: 2013/11/4;
- Sensor-Surface: 2mm (Mechanical Surface Detection)
- Electronics: DAE4 Sn1338; Calibrated: 2013/11/5
- Phantom: SAM Right; Type: QD000P40CD; Serial: TP:1644
- Measurement SW: DASY52, Version 52.8 (6); SEMCAD X Version 14.6.9 (7117)

Configuration/Pin=250mW/Area Scan (61x61x1): Interpolated grid: dx=1.200 mm, dy=1.200 mm
Maximum value of SAR (interpolated) = 23.8 W/kg

Configuration/Pin=250mW/Zoom Scan (7x7x7)/Cube 0: Measurement grid: dx=5mm, dy=5mm, dz=5mm
Reference Value = 101.6 V/m; Power Drift = 0.00 dB
Peak SAR (extrapolated) = 32.6 W/kg
SAR(1 g) = 14 W/kg; SAR(10 g) = 6.14 W/kg
Maximum value of SAR (measured) = 22.1 W/kg

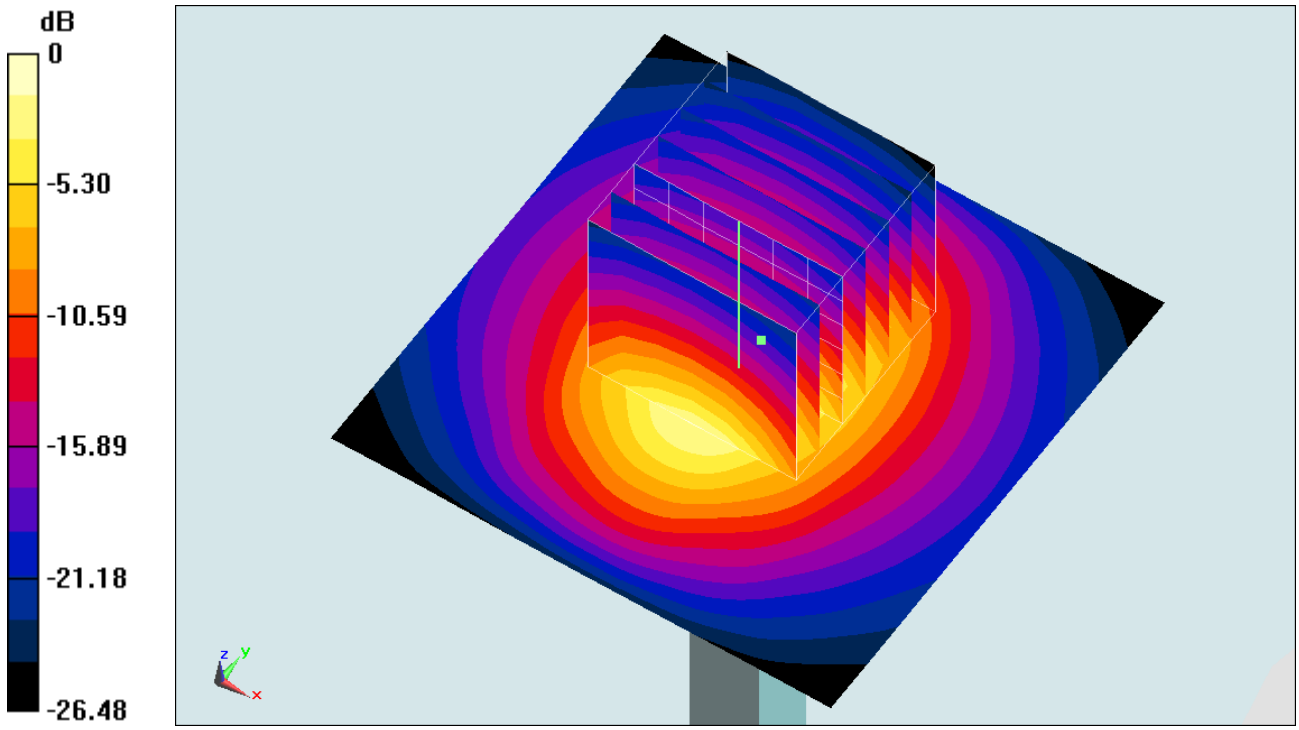

0 dB = 22.1 W/kg = 13.44 dBW/kg

System Check_Head_5200MHz_131218

DUT: D5GHzV2-1128

Communication System: CW; Frequency: 5200 MHz;Duty Cycle: 1:1
Medium: HSL_5G_131218 Medium parameters used: f = 5200 MHz; σ = 4.523 S/m; ε_r = 37.628; ρ = 1000 kg/m^3
Ambient Temperature：23.5 ℃； Liquid Temperature：22.5 ℃

DASY5 Configuration:
- Probe: EX3DV4 - SN3661; ConvF(5.11, 5.11, 5.11); Calibrated: 2013/1/15;
- Sensor-Surface: 1.4mm (Mechanical Surface Detection)
- Electronics: DAE3 Sn577; Calibrated: 2013/5/8
- Phantom: SAM LEFT; Type: QD000P40CD; Serial: TP:1718
- Measurement SW: DASY52, Version 52.8 (6); SEMCAD X Version 14.6.9 (7117)

Configuration/Pin=100mW/Area Scan (71x71x1): Interpolated grid: dx=1.000 mm, dy=1.000 mm
Maximum value of SAR (interpolated) = 23.5 W/kg

Configuration/Pin=100mW/Zoom Scan (7x7x7)/Cube 0: Measurement grid: dx=4mm, dy=4mm, dz=1.4mm
Reference Value = 46.592 V/m; Power Drift = 0.03 dB
Peak SAR (extrapolated) = 58.8 W/kg
SAR(1 g) = 7.96 W/kg; SAR(10 g) = 2.1 W/kg
Maximum value of SAR (measured) = 21.8 W/kg

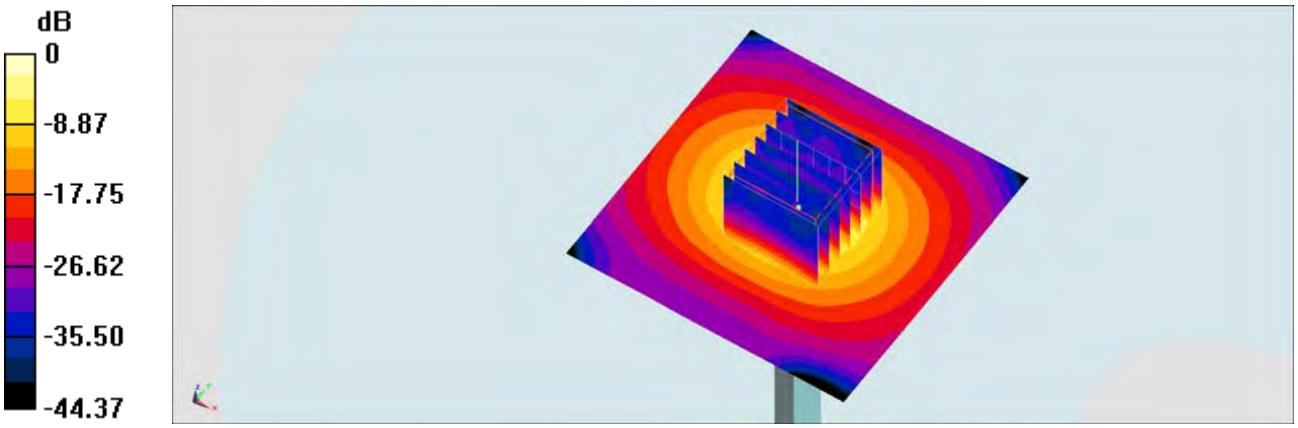

0 dB = 21.8 W/kg = 13.38 dBW/kg

System Check_Body_5200MHz_131220

DUT: D5GHzV2-1128

Communication System: CW; Frequency: 5200 MHz;Duty Cycle: 1:1
Medium: MSL_5G_131220 Medium parameters used: f = 5200 MHz; σ = 5.264 S/m; ε_r = 48.303; ρ = 1000 kg/m^3
Ambient Temperature：23.3 ℃； Liquid Temperature：22.3 ℃

DASY5 Configuration:
- Probe: EX3DV4 - SN3925; ConvF(4.41, 4.41, 4.41); Calibrated: 2013/6/12;
- Sensor-Surface: 1.4mm (Mechanical Surface Detection)
- Electronics: DAE3 Sn495; Calibrated: 2013/5/8
- Phantom: SAM-Left; Type: QD 000 P40 C; Serial: TP-1478
- Measurement SW: DASY52, Version 52.8 (7); SEMCAD X Version 14.6.10 (7164)

Configuration/Pin=100mW/Area Scan (71x71x1): Interpolated grid: dx=1.000 mm, dy=1.000 mm
Maximum value of SAR (interpolated) = 19.8 W/kg

Configuration/Pin=100mW/Zoom Scan (7x7x7)/Cube 0: Measurement grid: dx=4mm, dy=4mm, dz=1.4mm
Reference Value = 54.604 V/m; Power Drift = 0.02 dB
Peak SAR (extrapolated) = 32.5 W/kg
SAR(1 g) = 7.64 W/kg; SAR(10 g) = 2.05 W/kg
Maximum value of SAR (measured) = 19.3 W/kg

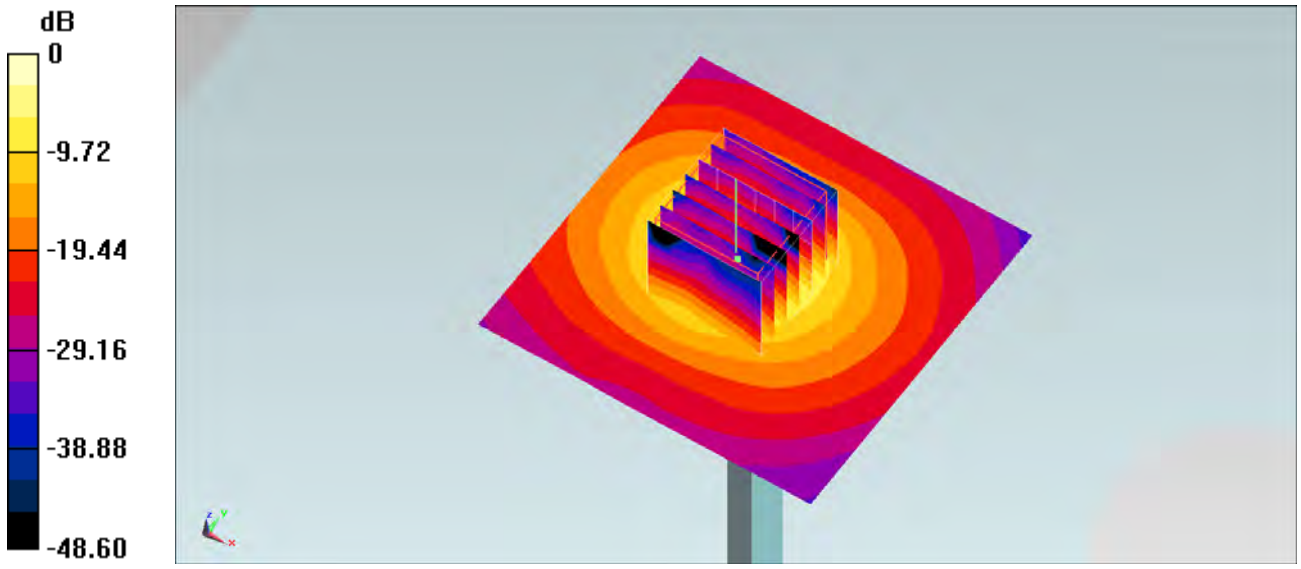

0 dB = 19.3 W/kg = 12.86 dBW/kg

System Check_Head_5300MHz_131218

DUT: D5GHzV2-1128

Communication System: CW; Frequency: 5300 MHz;Duty Cycle: 1:1
Medium: HSL_5G_131218 Medium parameters used: f = 5300 MHz; σ = 4.63 S/m; ε_r = 37.498; ρ = 1000 kg/m^3
Ambient Temperature：23.5 ℃； Liquid Temperature：22.5 ℃

DASY5 Configuration:
- Probe: EX3DV4 - SN3661; ConvF(4.93, 4.93, 4.93); Calibrated: 2013/1/15;
- Sensor-Surface: 1.4mm (Mechanical Surface Detection)
- Electronics: DAE3 Sn577; Calibrated: 2013/5/8
- Phantom: SAM LEFT; Type: QD000P40CD; Serial: TP:1718
- Measurement SW: DASY52, Version 52.8 (6); SEMCAD X Version 14.6.9 (7117)

Configuration/Pin=100mW/Area Scan (71x71x1): Interpolated grid: dx=1.000 mm, dy=1.000 mm
Maximum value of SAR (interpolated) = 20.8 W/kg

Configuration/Pin=100mW/Zoom Scan (7x7x7)/Cube 0: Measurement grid: dx=4mm, dy=4mm, dz=1.4mm
Reference Value = 48.619 V/m; Power Drift = 0.02 dB
Peak SAR (extrapolated) = 41.6 W/kg
SAR(1 g) = 7.76 W/kg; SAR(10 g) = 2.05 W/kg
Maximum value of SAR (measured) = 20.0 W/kg

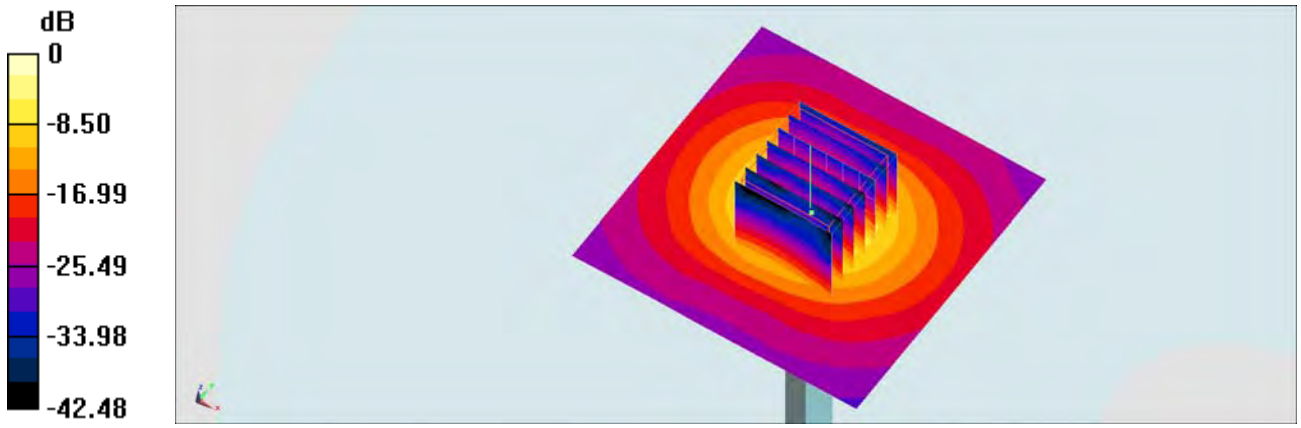

0 dB = 20.0 W/kg = 13.01 dBW/kg

System Check_Body_5300MHz_131220

DUT: D5GHzV2-1128

Communication System: CW; Frequency: 5300 MHz;Duty Cycle: 1:1
Medium: MSL_5G_131220 Medium parameters used: f = 5300 MHz; σ = 5.404 S/m; ε_r = 48.094; ρ = 1000 kg/m^3
Ambient Temperature：23.3 ℃； Liquid Temperature：22.3 ℃

DASY5 Configuration:
- Probe: EX3DV4 - SN3925; ConvF(4.26, 4.26, 4.26); Calibrated: 2013/6/12;
- Sensor-Surface: 1.4mm (Mechanical Surface Detection)
- Electronics: DAE3 Sn495; Calibrated: 2013/5/8
- Phantom: SAM-Left; Type: QD 000 P40 C; Serial: TP-1478
- Measurement SW: DASY52, Version 52.8 (7); SEMCAD X Version 14.6.10 (7164)

Configuration/Pin=100mW/Area Scan (71x71x1): Interpolated grid: dx=1.000 mm, dy=1.000 mm
Maximum value of SAR (interpolated) = 19.3 W/kg

Configuration/Pin=100mW/Zoom Scan (7x7x7)/Cube 0: Measurement grid: dx=4mm, dy=4mm, dz=1.4mm
Reference Value = 52.990 V/m; Power Drift = -0.00 dB
Peak SAR (extrapolated) = 33.1 W/kg
SAR(1 g) = 7.12 W/kg; SAR(10 g) = 1.9 W/kg
Maximum value of SAR (measured) = 18.7 W/kg

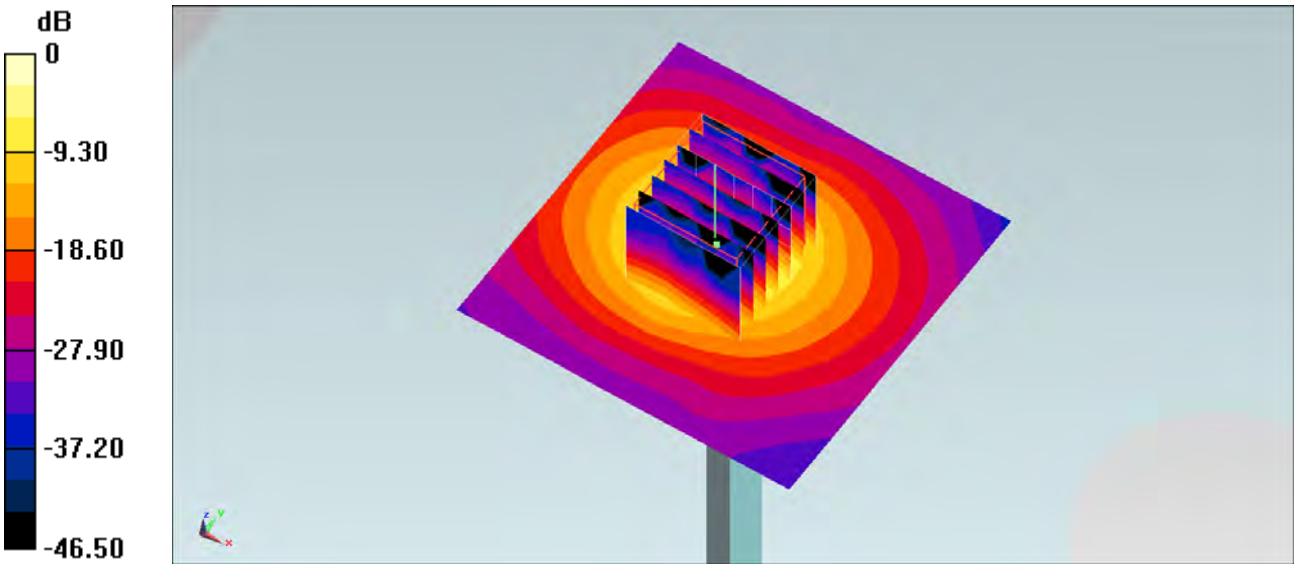

0 dB = 18.7 W/kg = 12.72 dBW/kg

System Check_Head_5600MHz_131218

DUT: D5GHzV2-1128

Communication System: CW; Frequency: 5600 MHz;Duty Cycle: 1:1
Medium: HSL_5G_131218 Medium parameters used: f = 5600 MHz; σ = 4.936 S/m; ε_r = 37.05; ρ = 1000 kg/m^3
Ambient Temperature：23.5 ℃； Liquid Temperature：22.5 ℃

DASY5 Configuration:
- Probe: EX3DV4 - SN3661; ConvF(4.27, 4.27, 4.27); Calibrated: 2013/1/15;
- Sensor-Surface: 1.4mm (Mechanical Surface Detection)
- Electronics: DAE3 Sn577; Calibrated: 2013/5/8
- Phantom: SAM LEFT; Type: QD000P40CD; Serial: TP:1718
- Measurement SW: DASY52, Version 52.8 (6); SEMCAD X Version 14.6.9 (7117)

Configuration/Pin=100mW/Area Scan (71x71x1): Interpolated grid: dx=1.000 mm, dy=1.000 mm
Maximum value of SAR (interpolated) = 21.4 W/kg

Configuration/Pin=100mW/Zoom Scan (7x7x7)/Cube 0: Measurement grid: dx=4mm, dy=4mm, dz=1.4mm
Reference Value = 48.956 V/m; Power Drift = 0.02 dB
Peak SAR (extrapolated) = 41.8 W/kg
SAR(1 g) = 8.04 W/kg; SAR(10 g) = 2.17 W/kg
Maximum value of SAR (measured) = 20.5 W/kg

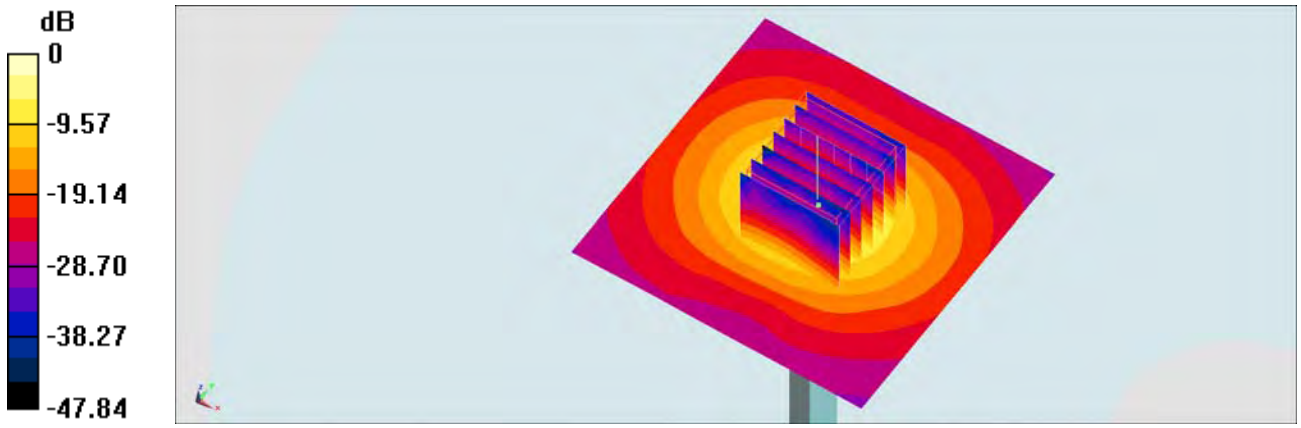

0 dB = 20.5 W/kg = 13.12 dBW/kg

System Check_Body_5600MHz_131220

DUT: D5GHzV2-1128

Communication System: CW; Frequency: 5600 MHz;Duty Cycle: 1:1
Medium: MSL_5G_131220 Medium parameters used: f = 5600 MHz; σ = 5.834 S/m; ε_r = 47.448; ρ = 1000 kg/m^3
Ambient Temperature：23.3 ℃； Liquid Temperature：22.3 ℃

DASY5 Configuration:
- Probe: EX3DV4 - SN3925; ConvF(3.78, 3.78, 3.78); Calibrated: 2013/6/12;
- Sensor-Surface: 1.4mm (Mechanical Surface Detection)
- Electronics: DAE3 Sn495; Calibrated: 2013/5/8
- Phantom: SAM-Left; Type: QD 000 P40 C; Serial: TP-1478
- Measurement SW: DASY52, Version 52.8 (7); SEMCAD X Version 14.6.10 (7164)

Configuration/Pin=100mW/Area Scan (71x71x1): Interpolated grid: dx=1.000 mm, dy=1.000 mm
Maximum value of SAR (interpolated) = 22.1 W/kg

Configuration/Pin=100mW/Zoom Scan (7x7x7)/Cube 0: Measurement grid: dx=4mm, dy=4mm, dz=1.4mm
Reference Value = 56.254 V/m; Power Drift = -0.00 dB
Peak SAR (extrapolated) = 35.6 W/kg
SAR(1 g) = 8.26 W/kg; SAR(10 g) = 2.2 W/kg
Maximum value of SAR (measured) = 21.4 W/kg

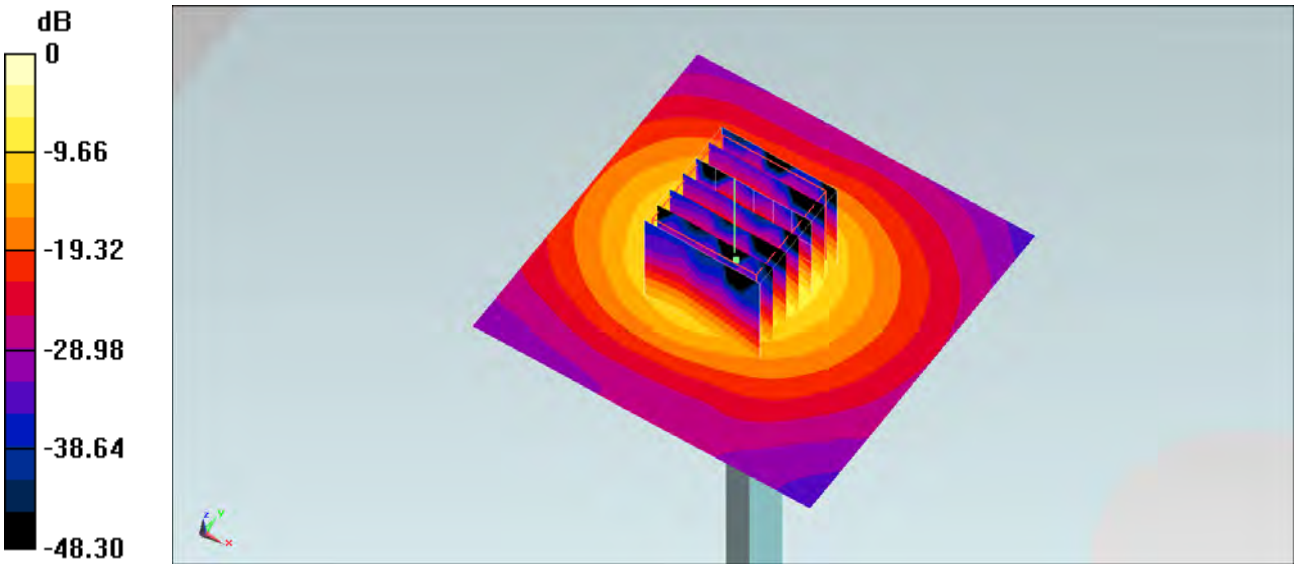

0 dB = 21.4 W/kg = 13.30 dBW/kg

System Check_Head_5800MHz_131218

DUT: D5GHzV2-1128

Communication System: CW; Frequency: 5800 MHz;Duty Cycle: 1:1
Medium: HSL_5G_131219 Medium parameters used: f = 5800 MHz; σ = 5.39 S/m; ε_r = 34.35; ρ = 1000 kg/m^3
Ambient Temperature：23.3 ℃； Liquid Temperature：22.3 ℃

DASY5 Configuration:
- Probe: EX3DV4 - SN3661; ConvF(4.4, 4.4, 4.4); Calibrated: 2013/1/15;
- Sensor-Surface: 1.4mm (Mechanical Surface Detection)
- Electronics: DAE4 Sn1279; Calibrated: 2013/1/28
- Phantom: SAM LEFT; Type: QD000P40CD; Serial: TP:1718
- Measurement SW: DASY52, Version 52.8 (6); SEMCAD X Version 14.6.9 (7117)

Configuration/Pin=100mW/Area Scan (71x71x1): Interpolated grid: dx=1.000 mm, dy=1.000 mm
Maximum value of SAR (interpolated) = 21.1 W/kg

Configuration/Pin=100mW/Zoom Scan (7x7x7)/Cube 0: Measurement grid: dx=4mm, dy=4mm, dz=1.4mm
Reference Value = 52.702 V/m; Power Drift = -0.18 dB
Peak SAR (extrapolated) = 29.7 W/kg
SAR(1 g) = 8.03 W/kg; SAR(10 g) = 2.28 W/kg
Maximum value of SAR (measured) = 18.8 W/kg

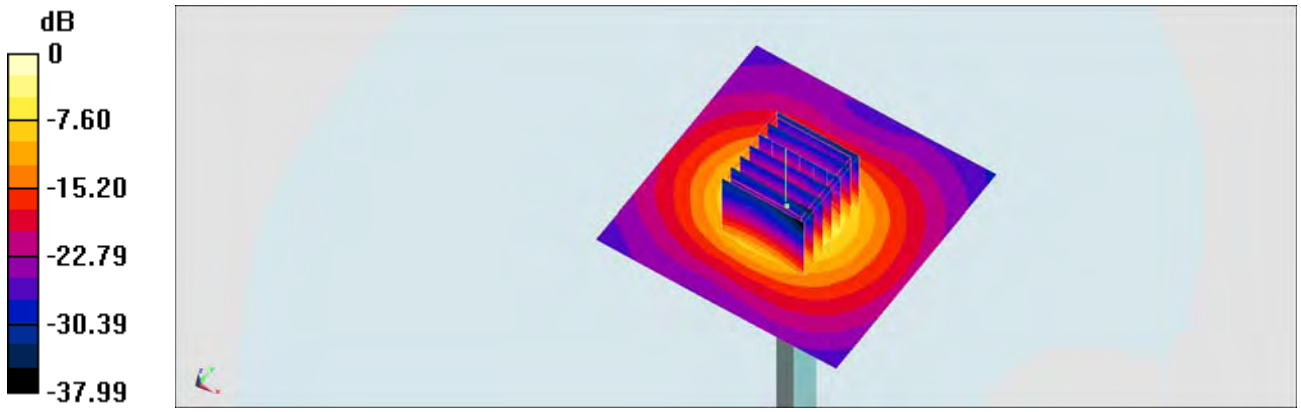

0 dB = 18.8 W/kg = 12.74 dBW/kg

System Check_Body_5800MHz_131225

DUT: D5GHzV2-1128

Communication System: CW; Frequency: 5800 MHz;Duty Cycle: 1:1
Medium: MSL_5G_131225 Medium parameters used: f = 5800 MHz; σ = 6.113 S/m; ε_r = 47.156; ρ = 1000 kg/m^3
Ambient Temperature：23.6 ℃； Liquid Temperature：22.6 ℃

DASY5 Configuration:
- Probe: EX3DV4 - SN3925; ConvF(4, 4, 4); Calibrated: 2013/6/12;
- Sensor-Surface: 1.4mm (Mechanical Surface Detection)
- Electronics: DAE3 Sn495; Calibrated: 2013/5/8
- Phantom: SAM-Right; Type: QD 000 P40 C; Serial: TP-1446
- Measurement SW: DASY52, Version 52.8 (7); SEMCAD X Version 14.6.10 (7164)

Configuration/Pin=100mW/Area Scan (71x71x1): Interpolated grid: dx=1.000 mm, dy=1.000 mm
Maximum value of SAR (interpolated) = 20.0 W/kg

Configuration/Pin=100mW/Zoom Scan (7x7x7)/Cube 0: Measurement grid: dx=4mm, dy=4mm, dz=1.4mm
Reference Value = 51.491 V/m; Power Drift = 0.00 dB
Peak SAR (extrapolated) = 34.7 W/kg
SAR(1 g) = 7.46 W/kg; SAR(10 g) = 1.99 W/kg
Maximum value of SAR (measured) = 19.7 W/kg

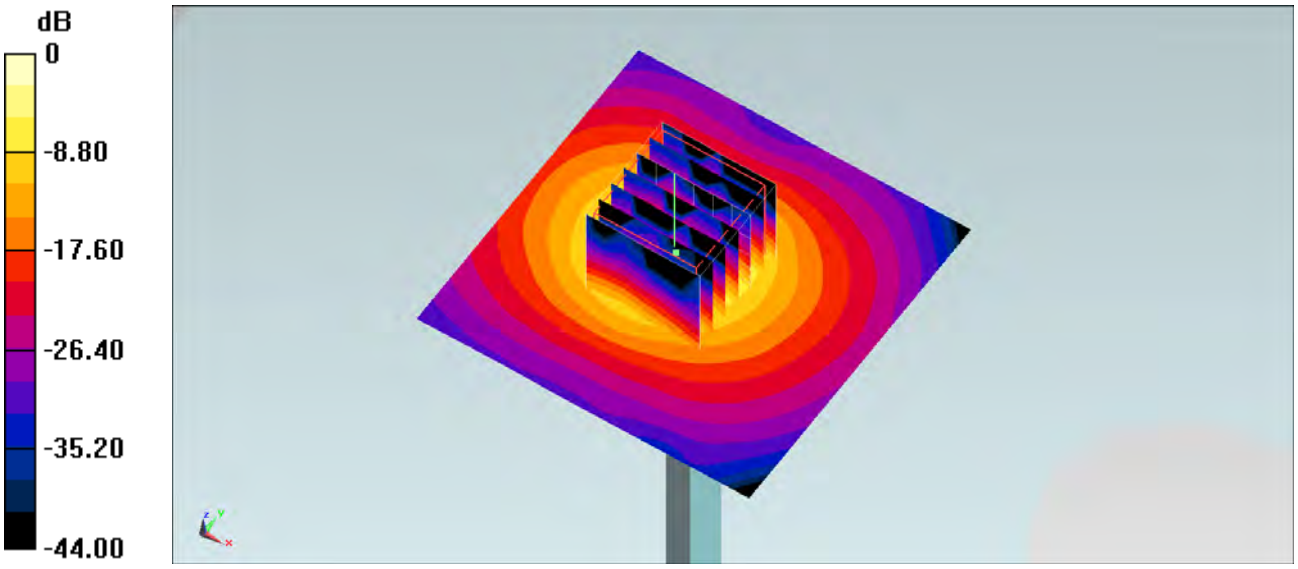

0 dB = 19.7 W/kg = 12.94 dBW/kg