CETECOM™
CETECOM ICT Services
consulting - testing - certification

TEST REPORT

Test Report No.: 1-6965/13-14-02-E

DAkkS Deutsche Akkreditierungsstelle D-PL-12076-01-01

Testing Laboratory

CETECOM ICT Services GmbH
Untertürkheimer Straße 6 – 10
66117 Saarbrücken/Germany
Phone: + 49 681 5 98 - 0
Fax: + 49 681 5 98 - 9075
Internet: http://www.cetecom.com
e-mail: ict@cetecom.com

Accredited Test Laboratory:
The testing laboratory (area of testing) is accredited according to DIN EN ISO/IEC 17025 (2005) by the Deutsche Akkreditierungsstelle GmbH (DAkkS)
The accreditation is valid for the scope of testing procedures as stated in the accreditation certificate with the registration number: D-PL-12076-01-01

Applicant

Sony Mobile Communications AB
Nya Vattentornet
22188 Lund/SWEDEN

Phone: +46 46 19 30 00

Contact: Mikael Nilsson
e-mail: Micke.nilsson@sonymobile.com
Phone: +46 7 03 22 75 03
Fax: -/-

Manufacturer

Sony Mobile Communications AB
Nya Vattentornet
22188 Lund/SWEDEN

Test Standard/s

IEEE 1528-2003	Recommended Practice for Determining the Peak Spatial-Average Specific Absorption Rate (SAR)in the Human Head from Wireless Communications Devices: Measurement Techniques
RSS-102 Issue 4	Radio Frequency Exposure Compliance of Radiocommunication Apparatus (All Frequency Bands)

For further applied test standards please refer to section 3 of this test report.

Test Item

Kind of test item:	Tablet PC
Device type:	portable device
S/N serial number:	CB5126DQC1 / CB5126DQ0B / CB5126DPX1 / CB5126DQ7Z/ CB5126DPWC / CB5126DQBB / CB5126DPUB / CB5126DPUK / CB5126DQ3C
FCC-ID:	PY7TM-0042
IMEI-Number:	004402452236122 / 004402452236635 / 004402452236486 / 004402452236627 / 00440245223654 / 00440245223658 / 004402452236734 / 004402452236643
Hardware status:	AP1
Software status:	17.1.A.0.379
Frequency:	see technical details
Antenna:	integrated antenna
Battery option:	Integrated Li-polymer battery 3.7V
Accessories:	Stereo headset model: MH750; type: AG-0501
Test sample status:	identical prototype
Exposure category:	general population / uncontrolled environment

This test report is electronically signed and valid without handwriting signature. For verification of the electronic signatures, the public keys can be requested at the testing laboratory.

Test Report authorised:

Thomas Vogler

DN: cn=Thomas Vogler, o=CETECOM ICT Services GmbH, ou=VOG-100727, email=thomas.vogler@cetecom.com, c=DE
Datum: 2014.08.29 12:38:47 +02'00'

Thomas Vogler
Professional

Test performed:

Marco Scigliano

cn=Marco Scigliano, o=CETECOM ICT Services GmbH, ou=SCI-120430, email=Marco.Scigliano@Cetecom.com, c=DE
2014.08.29 13:07:44 +02'00'

Marco Scigliano
Experienced

1 Table of contents

1 Table of contents 2

2 General information 4

2.1 Notes and disclaimer 4
2.2 Application details 4
2.3 Statement of compliance 4
2.4 Technical details 5
2.5 Transmitter and Antenna Operating Configurations 6

3 Test standards/ procedures references 7

3.1 RF exposure limits 9

4 Summary of Measurement Results 10

4.1 SAR measurement variability and measurement uncertainty analysis 10

5 Test Environment 10

6 Test Set-up 11

6.1 Measurement system 11
6.1.1 System Description 11
6.1.2 Test environment 12
6.1.3 Probe description 12
6.1.4 Phantom description 13
6.1.5 Device holder description 13
6.1.6 Laptop Extension Kit for Device holder 13
6.1.7 Scanning procedure 14
6.1.8 Spatial Peak SAR Evaluation 15
6.1.9 Data Storage and Evaluation 16
6.1.10 Tissue simulating liquids: dielectric properties 18
6.1.11 Tissue simulating liquids: parameters 19
6.1.12 Measurement uncertainty evaluation for SAR test 20
6.1.13 Measurement uncertainty evaluation for System Check 24
6.1.14 System check 26
6.1.15 System check procedure 27
6.1.16 System validation 28

7 Detailed Test Results 29

8 Detailed Test Results 29

8.1.1 Proximity sensor test result overview 29
8.1.2 Power reduction: 29
8.1.3 Resulting test positions for SAR measurements. 30
8.1.4 Safety measures in case of sensor malfunctions 30
8.2 Conducted power measurements 30
8.2.1 Conducted power measurements GSM 850 MHz 31
8.2.2 Conducted power measurements GSM 1900 MHz 32
8.2.3 Justification of SAR measurements in GSM mode 32
8.2.4 Conducted power measurements WCDMA FDD V (850 MHz) 33
8.2.5 Conducted power measurements WCDMA FDD II (1900 MHz) 34
8.2.6 Test-set-up information for WCDMA / HSPDA / HSUPA 35
8.2.7 Conducted average power measurements CDMA 40
8.2.8 Conducted power measurements LTE FDD 2 1900 MHz 41
8.2.9 Conducted power measurements LTE FDD 4 1700 MHz 44
8.2.10 Conducted power measurements LTE FDD 7 2600 MHz 47
8.2.11 Conducted power measurements LTE FDD 13 700 MHz 49
8.2.12 Justification of SAR measurements in LTE mode 50

8.2.13 MPR information in LTE mode 50
8.2.14 LTE - Carrier Aggregation 51
8.2.14.1 LTE - Carrier Aggregation B4 52
8.2.14.2 LTE - Carrier Aggregation B13 53
8.2.14.3 LTE - Carrier Aggregation B2 54
8.2.14.4 LTE - Carrier Aggregation B13 55
8.2.15 Conducted power measurements WLAN 2.4 GHz 56
8.2.16 Conducted power measurements WLAN 5 GHz 57
8.2.17 Standalone SAR Test Exclusion 60
8.2.18 SAR measurement positions 61
8.3 SAR test results 63
8.3.1 Results overview 63
8.3.2 General description of test procedures 71
8.3.3 Multiple Transmitter Information 72
8.3.4 SAR peak location separation 76

9 Test equipment and ancillaries used for tests 96

10 Observations 96

Annex A: System performance check 97

Annex B: DASY5 measurement results 108

Annex B.1: GSM 850MHz 108
Annex B.2: GSM 1900MHz 109
Annex B.3: UMTS FDD II 110
Annex B.4: UMTS FDD V 111
Annex B.5: CDMA 2000 BC0 112
Annex B.6: CDMA 2000 BC1 113
Annex B.7: LTE FDD 2 114
Annex B.8: LTE FDD 4 116
Annex B.9: LTE FDD 7 118
Annex B.10: LTE FDD 13 119
Annex B.11: WLAN 2450MHz 121
Annex B.12: WLAN 5GHz 122
Annex B.13: Liquid depth 123

Annex C: Photo documentation 126

Annex D: Calibration parameters 126

Annex E: Proximity sensor data 126

Annex F: LTE – Carrier Aggregation 126

Annex G: Document History 127

Annex H: Further Information 127

2 General information

2.1 Notes and disclaimer

The test results of this test report relate exclusively to the test item specified in this test report. CETECOM ICT Services GmbH does not assume responsibility for any conclusions and generalisations drawn from the test results with regard to other specimens or samples of the type of the equipment represented by the test item. The test report may only be reproduced or published in full. Reproduction or publication of extracts from the report requires the prior written approval of CETECOM ICT Services GmbH.
This test report is electronically signed and valid without handwriting signature. For verification of the electronic signatures, the public keys can be requested at the testing laboratory.
The testing service provided by CETECOM ICT Services GmbH has been rendered under the current "General Terms and Conditions for CETECOM ICT Services GmbH".
CETECOM ICT Services GmbH will not be liable for any loss or damage resulting from false, inaccurate, inappropriate or incomplete product information provided by the customer.
Under no circumstances does the CETECOM ICT Services GmbH test report include any endorsement or warranty regarding the functionality, quality or performance of any other product or service provided.
Under no circumstances does the CETECOM ICT Services GmbH test report include or imply any product or service warranties from CETECOM ICT Services GmbH, including, without limitation, any implied warranties of merchantability, fitness for purpose, or non-infringement, all of which are expressly disclaimed by CETECOM ICT Services GmbH.
All rights and remedies regarding vendor's products and services for which CETECOM ICT Services GmbH has prepared this test report shall be provided by the party offering such products or services and not by CETECOM ICT Services GmbH.
In no case this test report can be considered as a Letter of Approval.

2.2 Application details

Date of receipt of order:	2014-02-18
Date of receipt of test item:	2014-03-10
Start of test:	2014-03-12
End of test:	2014-03-20
Person(s) present during the test:	

2.3 Statement of compliance

The SAR values found for the Tablet PC are below the maximum recommended levels of 1.6 W/Kg as averaged over any 1 g tissue according to the FCC rule §2.1093, the ANSI/IEEE C 95.1:1992, the NCRP Report Number 86 for uncontrolled environment, according to the Health Canada's Safety Code 6 and the Industry Canada Radio Standards Specification RSS-102 for General Population/Uncontrolled exposure.

2.4 Technical details

Band tested for this test report	Technology	Lowest transmit frequency/MHz	Highest transmit frequency/MHz	Lowest receive Frequency/MHz	Highest receive Frequency/MHz	Kind of modulation	Power Class	Tested power control level	GPRS/EGPRS mobile station class	GPRS/EGPRS multislot class	(E)GPRS voice mode or DTM	Test channel low	Test channel middle	Test channel high	Maximum output power/dBm)*
☐	GSM	880.2	914.8	925.2	959.8	GMSK 8-PSK	4 E2	5	B	33	no	975	37	124	32.6
☐	GSM DCS	1710.2	1784.8	1805.2	1879.8	GMSK 8-PSK	1 E2	0	B	33	no	512	698	885	30.1
☒	GSM cellular	824.2	848.8	869.2	893.8	GMSK 8-PSK	4 E2	5	B	33	no	128	190	251	32.4
☒	GSM PCS	1850.2	1909.8	1930.2	1989.8	GMSK 8-PSK	1 E2	0	B	33	no	512	661	810	30.0
☒	CDMA BC0	815	849	860	894	QPSK	3	max	--	--	--	1013	384	777	24.0
☒	CDMA BC1	1850	1910	1930	1990	QPSK	3	max	--	--	--	25	600	1175	24.2
☐	UMTS FDD I	1922.4	1977.6	2112.4	2167.6	QPSK	3	max	--	--	--	9612	9750	9888	23.8
☒	UMTS FDD II	1852.4	1907.6	1932.4	1987.6	QPSK	3	max	--	--	--	9262	9400	9538	24.1
☒	UMTS FDD V	826.4	846.6	871.4	891.6	QPSK	3	max	--	--	--	4132	4182	4233	24.0
☐	UMTS FDD VIII	882.4	912.6	927.4	957.6	QPSK	3	max	--	--	--	2712	2788	2863	--
☒	LTE FDD 2	1850	1910	1930	1990	QPSK	3	max	--	--	--	18700	18900	19100	22.7
☐	LTE FDD 3	1710	1785	1805	1880	QPSK	3	max	--	--	--	19300	19575	19850	23.5
☒	LTE FDD 4	1710	1755	2110	2155	QPSK	3	max	--	--	--	20050	20175	20300	22.7
☒	LTE FDD 7	2500	2570	2620	2690	QPSK	3	max	--	--	--	20850	21100	21350	22.8
☒	LTE FDD 13	777	787	746	756	QPSK	3	max	--	--	--	23205	23230	23255	22.9
☐	WLAN	2412	2472	2412	2472	CCK OFDM	--	max	--	--	--	1	7	13	--
☒	WLAN US	2412	2462	2412	2462		--	max	--	--	--	1	6	11	10.4
☒	WLAN	5180	5240	5180	5240	OFDM	--	max	--	--	--	--	--	48	10.6
☒	WLAN	5260	5320	5260	5320	OFDM	--	max	--	--	--	52	--	--	10.6
☒	WLAN	5500	5700	5500	5700	OFDM	--	max	--	--	--	104	116	136	10.1
☒	WLAN	5745	5825	5745	5825	OFDM	--	max	--	--	--	153	--	--	10.3
☐	BT	2402	2480	2402	2480	GFSK	3	max	--	--	--	0	39	78	9.7

)*: measured slotted peak power for GSM, averaged max. RMS power for UMTS, LTE, WLAN and BT.

Features:

GSM bands 2.5	(GPRS, EDGE) class B, Multislot class 33 (max 4 TS uplink, max 5 TS downlink, max. 6 TS active) non DTM
Rel 9 HSDPA UE	cat 24 bands 1, 2, 5, 8 (QPSK, 16QAM, 64QAM, no MIMO, dual cell, 42.2 Mbps)
Rel 9 HSPA UE	cat: 6 bands 1, 2, 5, 8 (QPSK, no 16QAM, 5.76 Mbps)
Rel 10 LTE UE	cat: 4 bands 2, 3, 4, 7,13 (QPSK, 16QAM, no MIMO, 50Mbps uplink) Maximum TTI bundling: 4 Downlink LTE Carrier aggregation(Up to 20MHz).
BT BR / BT LE	
ANT+	
RFID 13.56 MHz	

2.5 Transmitter and Antenna Operating Configurations

Simultaneous transmission conditions		
GSM / GPRS / EDGE	+	BT/BLE[1]
GSM / GPRS / EDGE	+	WLAN 2.4GHz
GSM / GPRS / EDGE	+	WLAN 5GHz
UMTS / HSPA	+	BT/BLE
UMTS / HSPA	+	WLAN 2.4GHz
UMTS / HSPA	+	WLAN 5GHz
LTE	+	BT/BLE
LTE	+	WLAN 2.4GHz
LTE	+	WLAN 5GHz
1x/EVDO	+	BT/BLE
1x/EVDO	+	WLAN 2.4GHz
1x/EVDO	+	WLAN 5GHz
GSM / GPRS / EDGE	+	BT + WLAN 5GHz
UMTS / HSPA	+	BT + WLAN 5GHz
LTE	+	BT + WLAN 5GHz

Table 1: Simultaneous transmission conditions

Note: BT and WLAN can be active at the same time, but only with interleaving of packages switched on board level. That means that they don't transmit at the same time.

BLE[1] - Bluetooth low energy

3 Test standards/ procedures references

Test Standard	Version	Test Standard Description
IEEE 1528-2003	2003-04	Recommended Practice for Determining the Peak Spatial-Average Specific Absorption Rate (SAR) in the Human Head from Wireless Communications Devices: Measurement Techniques
IEEE 1528-2013	2014-06	Recommended Practice for Determining the Peak Spatial-Average Specific Absorption Rate (SAR) in the Human Head from Wireless Communications Devices: Measurement Techniques
RSS-102 Issue 4	2010-03	Radio Frequency Exposure Compliance of Radiocommunication Apparatus (All Frequency Bands)
Canada's Safety Code No. 6	99-EHD-237	Limits of Human Exposure to Radiofrequency Electromagnetic Fields in the Frequency Range from 3 kHz to 300 GHz
IEEE Std. C95-3	2002	IEEE Recommended Practice for the Measurement of Potentially Hazardous Electromagnetic Fields – RF and Microwave
IEEE Std. C95-1	1992	IEEE Standard for Safety Levels with Respect to Human Exposure to Radio Frequency Electromagnetic Fields, 3 kHz to 300 GHz.
IEC 62209-2	2010	Human exposure to radio frequency fields from hand-held and bodymounted wireless communication devices. Human models, instrumentation, and procedures. Procedure to determine the specific absorption rate (SAR) for wireless communication devices used in close proximity to the human body (frequency range of 30 MHz to 6 GHz)

FCC KDBs:

KDB 865664D01v01	February 7, 2014	FCC OET SAR measurement requirements 100 MHz to 6 GHz
KDB 865664D02v01	May 28, 2013	RF Exposure Compliance Reporting and Documentation Considerations
KDB 447498D01v05	February 7, 2014	Mobile and Portable Devices RF Exposure Procedures and Equipment Authorization Policies
KDB 648474D04v01	May 28, 2013	SAR Evaluation Considerations for Wireless Handsets
KDB 941225D01v02	Octpber, 2007	SAR Measurements Procedures for 3G Devices
KDB 941225D02v01	December 14, 2009	3GPP R6 HSPA and R7 HSPA+ SAR Guidance
KDB 941225D02v02	May 28, 2013	SAR Guidance for HSPA, HSPA+, DC-HSDPA and 1x-Advanced
KDB 941225D04v01	January 27, 2010	Evaluating SAR for GSM/(E)GPRS Dual Transfer Mode
KDB 941225D05v02	December 5, 2013	SAR for LTE Devices
KDB 941225D05Av01	February 7, 2014	LTE Rel. 10 KDB Inquiry Sheet
KDB 941225D03v01	December, 2008	SAR Test Reduction Procedure for GSM/GPRS/EDGE
KDB 941225D06v01	May 28, 2013	SAR Evaluation Procedures for Portable Devices with Wireless Router Capabilities
KDB 941225D07v01	May 28, 2013	UMPS Mini Tablet
KDB 248227D01v01	February, 2008	SAR Measurement Procedures for 802.11 a/b/g Transmitters
KDB 450824D01v01	January, 2007	SAR Probe Calibration and System Verification considerations for measurements from 150 MHz to 3 GHz
KDB 450824D01v01	March 4, 2012	Dipole Requirements for SAR System Validation and Verification
KDB 616217D03v01	November 13, 2009	SAR Evaluation Considerations for Laptop Computers with Antennas Built-in on Display Screens

3.1 RF exposure limits

Human Exposure	Uncontrolled Environment General Population	Controlled Environment Occupational
Spatial Peak SAR* (Brain and Trunk)	**1.60 mW/g**	8.00 mW/g
Spatial Average SAR** (Whole Body)	0.08 mW/g	0.40 mW/g
Spatial Peak SAR*** (Hands/Feet/Ankle/Wrist)	4.00 mW/g	20.00 mW/g

Table 2: RF exposure limits

The limit applied in this test report is shown in bold letters

Notes:

* The Spatial Peak value of the SAR averaged over any 1 gram of tissue (defined as a tissue volume in the shape of a cube) and over the appropriate averaging time

** The Spatial Average value of the SAR averaged over the whole body.

*** The Spatial Peak value of the SAR averaged over any 10 grams of tissue (defined as a tissue volume in the shape of a cube) and over the appropriate averaging time.

Uncontrolled Environments are defined as locations where there is the exposure of individuals who have no knowledge or control of their exposure.

Controlled Environments are defined as locations where there is exposure that may be incurred by persons who are aware of the potential for exposure, (i.e. as a result of employment or occupation).

4 Summary of Measurement Results

☒	**No deviations from the technical specifications ascertained**
☐	Deviations from the technical specifications ascertained

Maximum SAR value reported for 1g (W/kg)				
		PCE	**DTS**	**UNII**
body		**1.277**	**0.710**	**0.961**
collocated situations	**ΣSAR evaluation**	**1.577**		
	$SPLSR_i$ ≤ 0.040	**0.034**		

4.1 SAR measurement variability and measurement uncertainty analysis

This analysis is required for worst case results larger than 0.8 W/kg.

frequency band	highest original measurement result at worst case position (W/kg)	repeated measurement result at worst case position (W/kg)	ratio <1.2
GSM 850	0.837	0.847	1.01
GSM 1900	0.875	0.876	1.00
UMTS FDD V	0.807	0.804	1.00
CDMA2000 BC0	0.834	0.838	1.00
CDMA2000 BC1	0.996	0.970	1.03
LTE FDD 2	0.991	0.911	1.09
LTE FDD 4	0.991	0.846	1.17
LTE FDD 7	1.010	1.000	1.01
LTE FDD 13	0.887	0.885	1.00

5 Test Environment

Ambient temperature: 20 – 24 °C
Tissue Simulating liquid: 20 – 24 °C

Relative humidity content: 40 – 50 %
Air pressure: not relevant for this kind of testing
Power supply: 230 V / 50 Hz

Exact temperature values for each test are shown in the table(s) under 7.1 and/or on the measurement plots.

6 Test Set-up

6.1 Measurement system

6.1.1 System Description

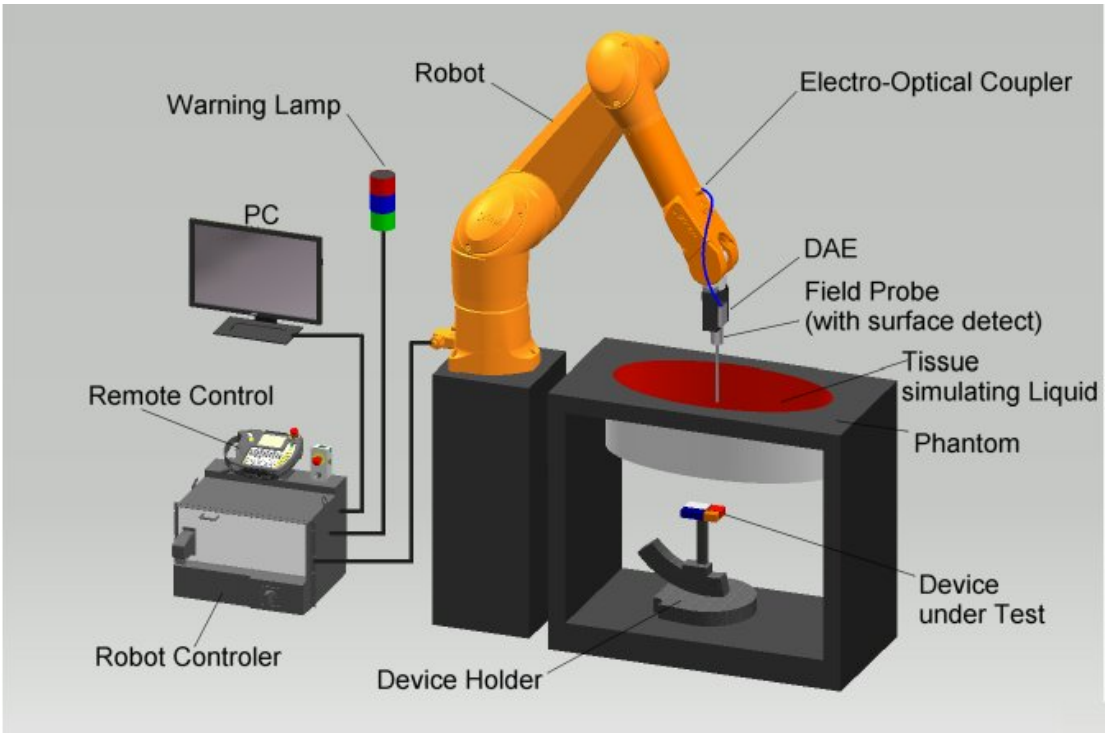

- The DASY system for performing compliance tests consists of the following items:
- A standard high precision 6-axis robot (Stäubli RX family) with controller and software. An arm extension for accommodating the data acquisition electronics (DAE).
- A dosimetric probe, i.e. an isotropic E-field probe optimized and calibrated for usage in tissue simulating liquid. The probe is equipped with an optical surface detector system.
- A data acquisition electronic (DAE) which performs the signal amplification, signal multiplexing, AD-conversion, offset measurements, mechanical surface detection, collision detection, etc. The unit is battery powered with standard or rechargeable batteries. The signal is optically transmitted to the EOC.
- A unit to operate the optical surface detector which is connected to the EOC.
- The Electro-Optical Coupler (EOC) performs the conversion from the optical into a digital electric signal of the DAE. The EOC is connected to the DASY measurement server.
- The DASY measurement server, which performs all real-time data evaluation for field measurements and surface detection, controls robot movements and handles safety operation. A computer operating Windows 7.
- DASY software and SEMCAD data evaluation software.
- Remote control with teach panel and additional circuitry for robot safety such as warning lamps, etc.
- The generic twin phantom enabling the testing of left-hand and right-hand usage.
- The device holder for handheld mobile phones.
- Tissue simulating liquid mixed according to the given recipes.
- System check dipoles allowing to validate the proper functioning of the system.

6.1.2 Test environment

The DASY measurement system is placed at the head end of a room with dimensions:
5 x 2.5 x 3 m³, the SAM phantom is placed in a distance of 75 cm from the side walls and 1.1m from the rear wall. Above the test system a 1.5 x 1.5 m² array of pyramid absorbers is installed to reduce reflections from the ceiling.
Picture 1 of the photo documentation shows a complete view of the test environment.
The system allows the measurement of SAR values larger than 0.005 mW/g.

6.1.3 Probe description

Isotropic E-Field Probe ET3DV6 for Dosimetric Measurements

Technical data according to manufacturer information	
Construction	Symmetrical design with triangular core Built-in optical fiber for surface detection system Built-in shielding against static charges PEEK enclosure material (resistant to organic solvents, e.g., glycolether)
Calibration	In air from 10 MHz to 2.5 GHz In head tissue simulating liquid (HSL) at 900 (800-1000) MHz and 1.8 GHz (1700-1910 MHz) (accuracy ± 9.5%; k=2) Calibration for other liquids and frequencies upon request
Frequency	10 MHz to 3 GHz (dosimetry); Linearity: ± 0.2 dB (30 MHz to 3 GHz)
Directivity	± 0.2 dB in HSL (rotation around probe axis) ± 0.4 dB in HSL (rotation normal to probe axis)
Dynamic range	5 µW/g to > 100 mW/g; Linearity: ± 0.2 dB
Optical Surface Detection	± 0.2 mm repeatability in air and clear liquids over diffuse reflecting surfaces (ET3DV6 only)
Dimensions	Overall length: 330 mm Tip length: 16 mm Body diameter: 12 mm Tip diameter: 6.8 mm Distance from probe tip to dipole centers: 2.7 mm
Application	General dosimetry up to 3 GHz Compliance tests of mobile phones Fast automatic scanning in arbitrary phantoms (ET3DV6)

6.1.4 Phantom description

The used ELI4 Phantom meets the requirements specified in KDB865664 D01 for Specific Absorption Rate (SAR) measurements. The phantom consists of a fibreglass shell integrated in a wooden table.

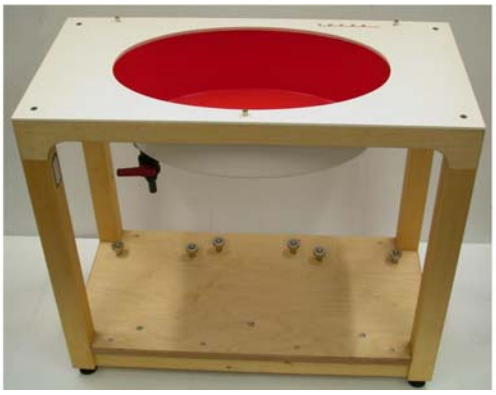

The ELI4 phantom is intended for compliance testing of handheld and body-mounted wireless devices in the frequency range of 30MHz to 6 GHz. ELI4 is fully compatible with the standard IEC 62209-2 and all known tissue simulating liquids.

6.1.5 Device holder description

The DASY device holder has two scales for device rotation (with respect to the body axis) and the device inclination (with respect to the line between the ear openings). The plane between the ear openings and the mouth tip has a rotation angle of 65°. The bottom plate contains three pair of bolts for locking the device holder. The device holder positions are adjusted to the standard measurement positions in the three sections. This device holder is used for standard mobile phones or PDA's only. If necessary an additional support of polystyrene material is used.

Larger DUT's (e.g. notebooks) cannot be tested using the device holder without the extension kit described below.

6.1.6 Laptop Extension Kit for Device holder

SPEAG released a simple but effective extension for their Mounting Device that facilitates the testing of larger devices according to IEC 62209-2 (e.g., laptops, cameras, etc).

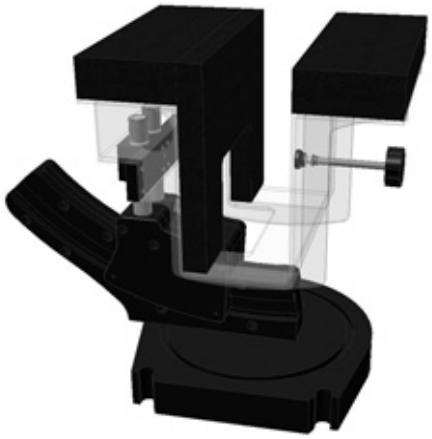

The extension is lightweight and made of POM, PET-G acrylic glass and foam. It fits easily on the upper part of the Mounting Device in place of the phone positioner.

6.1.7 Scanning procedure

- The DASY installation includes predefined files with recommended procedures for measurements and system check. They are read-only document files and destined as fully defined but unmeasured masks. All test positions (head or body-worn) are tested with the same configuration of test steps differing only in the grid definition for the different test positions.

- The „reference“ and „drift“ measurements are located at the beginning and end of the batch process. They measure the field drift at one single point in the liquid over the complete procedure. The indicated drift is mainly the variation of the DUT’s output power and should vary max. +/- 5 %.

- The „surface check“ measurement tests the optical surface detection system of the DASY system by repeatedly detecting the surface with the optical and mechanical surface detector and comparing the results. The output gives the detecting heights of both systems, the difference between the two systems and the standard deviation of the detection repeatability. Air bubbles or refraction in the liquid due to separation of the sugar-water mixture gives poor repeatability (above ± 0.1mm). To prevent wrong results tests are only executed when the liquid is free of air bubbles. The difference between the optical surface detection and the actual surface depends on the probe and is specified with each probe. (It does not depend on the surface reflectivity or the probe angle to the surface within ± 30°.)

- The „area scan“ measures the SAR above the DUT or verification dipole on a parallel plane to the surface. It is used to locate the approximate location of the peak SAR with 2D spline interpolation. The robot performs a stepped movement along one grid axis while the local electrical field strenth is measured by the probe. The probe is touching the surface of the SAM during acquisition of measurement values. The standard scan uses large grid spacing for faster measurement. Standard grid spacing for head measurements is 15 mm in x- and y- dimension. If a finer resolution is needed, the grid spacing can be reduced. Grid spacing and orientation have no influence on the SAR result. For special applications where the standard scan method does not find the peak SAR within the grid, e.g. mobile phones with flip cover, the grid can be adapted in orientation. Results of this coarse scan are shown in annex 2.

- A „7x7x7 zoom scan” measures the field in a volume around the 2D peak SAR value acquired in the previous „coarse“ scan. This is a fine 7x7 grid where the robot additionally moves the probe in 7 steps along the z-axis away from the bottom of the Phantom. Grid spacing for the cube measurement is 5 mm / 4 mm in x and y-direction and 5 mm / 2 mm in z-direction. DASY is also able to perform repeated zoom scans if more than 1 peak is found during area scan. In this document, the evaluated peak 1g and 10g averaged SAR values are shown in the 2D-graphics in annex 2. Test results relevant for the specified standard (see section 3) are shown in table form in section 7.

- A Z-axis scan measures the total SAR value at the x-and y-position of the maximum SAR value found during the cube 7x7x7 scan. The probe is moved away in z-direction from the bottom of the SAM phantom in 2mm steps. This measurement shows the continuity of the liquid and can - depending in the field strength – also show the liquid depth. A z-axis scan of the measurement with maximum SAR value is shown in annex 2.

6.1.8 Spatial Peak SAR Evaluation

The spatial peak SAR - value for 1 and 10 g is evaluated after the Cube measurements have been done. The basis of the evaluation are the SAR values measured at the points of the fine cube grid consisting of 7 x 7 x 7 points. The algorithm that finds the maximal averaged volume is separated into three different stages.

- The data between the dipole center of the probe and the surface of the phantom are extrapolated. This data cannot be measured since the center of the dipole is 2.7 mm away from the tip of the probe and the distance between the surface and the lowest measuring point is about 1 mm (see probe calibration sheet). The extrapolated data from a cube measurement can be visualized by selecting 'Graph Evaluated'.

- The maximum interpolated value is searched with a straight-forward algorithm. Around this maximum the SAR - values averaged over the spatial volumes (1g or 10 g) are computed using the 3d-spline interpolation algorithm. If the volume cannot be evaluated (i.e., if a part of the grid was cut off by the boundary of the measurement area) the evaluation will be started on the corners of the bottom plane of the cube.

- All neighbouring volumes are evaluated until no neighbouring volume with a higher average value is found.

Extrapolation

The extrapolation is based on a least square algorithm [W. Gander, Computermathematik, p.168-180]. Through the points in the first 3 cm along the z-axis, polynomials of order four are calculated. These polynomials are then used to evaluate the points between the surface and the probe tip. The points, calculated from the surface, have a distance of 1 mm from each other.

Interpolation

The interpolation of the points is done with a 3d-Spline. The 3d-Spline is composed of three one-dimensional splines with the "Not a knot"-condition [W. Gander, Computermathematik, p.141-150] (x, y and z -direction) [Numerical Recipes in C, Second Edition, p.123ff].

Volume Averaging

At First the size of the cube is calculated. Then the volume is integrated with the trapezoidal algorithm. 8000 points (20x20x20) are interpolated to calculate the average.

Advanced Extrapolation

DASY uses the advanced extrapolation option which is able to compensate boundary effects on E-field probes.

6.1.9 Data Storage and Evaluation

Data Storage

The DASY software stores the acquired data from the data acquisition electronics as raw data (in microvolt readings from the probe sensors), together with all necessary software parameters for the data evaluation (probe calibration data, liquid parameters and device frequency and modulation data) in measurement files with the extension ".DA4", ".DA5x". The software evaluates the desired unit and format for output each time the data is visualized or exported. This allows verification of the complete software setup even after the measurement and allows correction of incorrect parameter settings. For example, if a measurement has been performed with a wrong crest factor parameter in the device setup, the parameter can be corrected afterwards and the data can be re-evaluated.

The measured data can be visualized or exported in different units or formats, depending on the selected probe type ([V/m], [A/m], [°C], [mW/g], [mW/cm²], [dBrel], etc.). Some of these units are not available in certain situations or show meaningless results, e.g., a SAR output in a lossless media will always be zero. Raw data can also be exported to perform the evaluation with other software packages.

Data Evaluation by SEMCAD

The SEMCAD software automatically executes the following procedures to calculate the field units from the microvolt readings at the probe connector. The parameters used in the evaluation are stored in the configuration modules of the software:

Probe parameters:	- Sensitivity	$Norm_i$, a_{i0}, a_{i1}, a_{i2}
	- Conversion factor	$ConvF_i$
	- Diode compression point	Dcpi
Device parameters:	- Frequency	f
	- Crest factor	cf
Media parameters:	- Conductivity	σ
	- Density	ρ

These parameters must be set correctly in the software. They can be found in the component documents or they can be imported into the software from the configuration files issued for the DASY components. In the direct measuring mode of the multimeter option, the parameters of the actual system setup are used. In the scan visualization and export modes, the parameters stored in the corresponding document files are used.

The first step of the evaluation is a linearization of the filtered input signal to account for the compression characteristics of the detector diode. The compensation depends on the input signal, the diode type and the DC-transmission factor from the diode to the evaluation electronics.

If the exciting field is pulsed, the crest factor of the signal must be known to correctly compensate for peak power. The formula for each channel can be given as:

$$V_i = U_i + U_i^2 \cdot cf/dcp_i$$

with	V_i	= compensated signal of channel i	(i = x, y, z)
	U_i	= input signal of channel i	(i = x, y, z)
	cf	= crest factor of exciting field	(DASY parameter)
	dcp_i	= diode compression point	(DASY parameter)

From the compensated input signals the primary field data for each channel can be evaluated:

E-field probes: $$E_i = (V_i / Norm_i \cdot ConvF)^{1/2}$$

H-field probes: $$H_i = (V_i)^{1/2} \cdot (a_{i0} + a_{i1}f + a_{i2}f^2)/f$$

with	V_i	= compensated signal of channel i	(i = x, y, z)
	$Norm_i$	= sensor sensitivity of channel i [mV/(V/m)^2] for E-field Probes	(i = x, y, z)
	ConvF	= sensitivity enhancement in solution	
	a_{ij}	= sensor sensitivity factors for H-field probes	
	f	= carrier frequency [GHz]	
	E_i	= electric field strength of channel i in V/m	
	H_i	= magnetic field strength of channel i in A/m	

The RSS value of the field components gives the total field strength (Hermitian magnitude):

$$E_{tot} = (E_x^2 + E_Y^2 + E_z^2)^{1/2}$$

The primary field data are used to calculate the derived field units.

$$SAR = (E_{tot}^2 \cdot \sigma) / (\rho \cdot 1000)$$

with	SAR	= local specific absorption rate in mW/g
	E_{tot}	= total field strength in V/m
	σ	= conductivity in [mho/m] or [Siemens/m]
	ρ	= equivalent tissue density in g/cm^3

Note that the density is normally set to 1 (or 1.06), to account for actual brain density rather than the density of the simulation liquid.The power flow density is calculated assuming the excitation field to be a free space field.

$$P_{pwe} = E_{tot}^2 / 3770 \qquad \text{or} \qquad P_{pwe} = H_{tot}^2 \cdot 37.7$$

with	P_{pwe}	= equivalent power density of a plane wave in mW/cm^2
	E_{tot}	= total electric field strength in V/m
	H_{tot}	= total magnetic field strength in A/m

6.1.10 Tissue simulating liquids: dielectric properties

The following materials are used for producing the tissue-equivalent materials.

(Liquids used for tests described in section 7. are marked with ☒) :

Ingredients (% of weight)	**Frequency (MHz)**								
frequency band	☐ 450	☒ 750	☒ 835	☒ 900	☐ 1450	☒ 1750	☒ 1900	☒ 2450	☒ 5000
Tissue Type	Body	Body	Body	Body	Body	Body	Body	Body	Body
Water	51.16	51.7	52.4	56.0	70.97	69.91	69.91	73.2	64 - 78
Salt (NaCl)	1.49	0.9	1.40	0.76	0.43	0.13	0.13	0.04	2 - 3
Sugar	46.78	47.2	45.0	41.76	0.0	0.0	0.0	0.0	0.0
HEC	0.52	0.0	1.0	1.21	0.0	0.0	0.0	0.0	0.0
Bactericide	0.05	0.1	0.1	0.27	0.0	0.0	0.0	0.0	0.0
Triton X-100	0.0	0.0	0.0	0.0	0.0	0.0	0.0	0.0	0.0
DGBE	0.0	0.0	0.0	0.0	28.60	29.96	29.96	26.7	0.0
Emulsifiers	0.0	0.0	0.0	0.0	0.0	0.0	0.0	0.0	9 - 15
Mineral Oil	0.0	0.0	0.0	0.0	0.0	0.0	0.0	0.0	11 - 18

Table 3: Body tissue dielectric properties

Salt: 99+% Pure Sodium Chloride
Water: De-ionized, 16MΩ+ resistivity
Sugar: 98+% Pure Sucrose
HEC: Hydroxyethyl Cellulose
DGBE: 99+% Di(ethylene glycol) butyl ether, [2-(2-butoxyethoxy)ethanol]
Triton X-100(ultra pure): Polyethylene glycol mono [4-(1,1,3,3-tetramethylbutyl)phenyl]ether

6.1.11 Tissue simulating liquids: parameters

Liquid **MSL**	Freq. (MHz)	Target **body** tissue		Measurement **body** tissue					Measurement date
		Permittivity	Conductivity [S/m]	Permittivity	Dev. %	Conductivity ε''	Conductivity [S/m]	Dev. %	
750	750	55.53	0.96	54.4	-2.1%	22.94	0.96	-0.7%	2014-03-19
	779	55.42	0.97	54.1	-2.3%	22.81	0.99	2.3%	
	782	55.41	0.97	54.1	-2.4%	22.78	0.99	2.6%	
	784	55.40	0.97	54.1	-2.4%	22.74	0.99	2.7%	
850	824	55.24	0.97	54.0	-2.2%	21.32	0.98	0.8%	2014-03-12
	825	55.24	0.97	54.0	-2.2%	21.31	0.98	0.9%	
	826	55.24	0.97	54.0	-2.2%	21.34	0.98	1.2%	
	835	55.20	0.97	53.9	-2.3%	21.33	0.99	2.1%	
	836	55.20	0.97	53.9	-2.3%	21.34	0.99	2.2%	
	837	55.19	0.97	53.9	-2.3%	21.35	0.99	2.2%	
	847	55.16	0.98	53.8	-2.4%	21.28	1.00	1.8%	
	848	55.16	0.99	53.8	-2.4%	21.27	1.00	1.8%	
	849	55.16	0.99	53.8	-2.4%	21.28	1.01	1.8%	
1750	1720	53.51	1.47	52.5	-1.8%	15.45	1.48	0.6%	2014-03-15
	1732	53.48	1.48	52.5	-1.8%	15.39	1.48	0.4%	
	1745	53.44	1.49	52.5	-1.7%	15.36	1.49	0.4%	
	1750	53.43	1.49	52.5	-1.7%	15.35	1.49	0.4%	
1900	1850	53.30	1.52	52.7	-1.0%	14.12	1.45	-4.4%	2014-03-13
	1851	53.30	1.52	52.7	-1.0%	14.10	1.45	-4.5%	
	1852	53.30	1.52	52.7	-1.0%	14.11	1.45	-4.4%	
	1860	53.30	1.52	52.7	-1.0%	14.07	1.46	-4.2%	
	1880	53.30	1.52	52.8	-1.0%	14.16	1.48	-2.6%	
	1900	53.30	1.52	52.5	-1.4%	14.25	1.51	-0.9%	
	1908	53.30	1.52	52.4	-1.6%	14.21	1.51	-0.8%	
	1909	53.30	1.52	52.4	-1.6%	14.20	1.51	-0.8%	
	1910	53.30	1.52	52.4	-1.6%	14.18	1.51	-0.9%	
2450	2412	52.75	1.91	51.5	-2.3%	14.36	1.93	0.7%	2014-03-17
	2437	52.72	1.94	51.7	-2.0%	14.49	1.96	1.4%	
	2450	52.70	1.95	51.7	-1.9%	14.54	1.98	1.6%	
	2462	52.68	1.97	51.6	-2.0%	14.55	1.99	1.3%	
	2510	52.62	2.04	51.2	-2.7%	14.46	2.02	-0.8%	
	2535	52.59	2.07	51.2	-2.6%	14.59	2.06	-0.7%	
	2560	52.56	2.11	51.4	-2.3%	14.80	2.11	0.1%	
	2600	52.51	2.16	51.1	-2.6%	14.81	2.14	-1.0%	
5GHz	5200	49.01	5.30	48.4	-1.3%	18.04	5.22	-1.6%	2014-03-19
	5240	48.96	5.35	48.1	-1.7%	18.05	5.26	-1.6%	
	5260	48.93	5.37	48.0	-2.0%	18.06	5.28	-1.6%	
	5500	48.61	5.65	47.6	-2.0%	18.32	5.61	-0.8%	
	5520	48.58	5.67	47.6	-2.0%	18.37	5.64	-0.6%	
	5580	48.50	5.74	47.7	-1.7%	18.37	5.70	-0.7%	
	5620	48.44	5.79	47.6	-1.8%	18.39	5.75	-0.7%	
	5680	48.36	5.86	47.3	-2.3%	18.44	5.83	-0.6%	
	5765	48.25	5.96	47.1	-2.3%	18.54	5.95	-0.2%	
	5800	48.20	6.00	47.1	-2.4%	18.48	5.96	-0.6%	

Table 4: Parameter of the body tissue simulating liquid
Note: The dielectric properties have been measured using the contact probe method at 22°C.

6.1.12 Measurement uncertainty evaluation for SAR test

Relative DASY5 Uncertainty Budget for SAR Tests								
According to IEEE 1528/2011 and IEC62209-1/2011 (0.3-3GHz range)								
Error Description	Uncertainty Value	Probability Distribution	Divisor	c_i	c_i	Standard Uncertainty		v_i^2 or v_{eff}
				(1g)	(10g)	± %, (1g)	± %, (10g)	
Measurement System								
Probe calibration	± 6.0 %	Normal	1	1	1	± 6.0 %	± 6.0 %	∞
Axial isotropy	± 4.7 %	Rectangular	√ 3	0.7	0.7	± 1.9 %	± 1.9 %	∞
Hemispherical isotropy	± 9.6 %	Rectangular	√ 3	0.7	0.7	± 3.9 %	± 3.9 %	∞
Boundary effects	± 1.0 %	Rectangular	√ 3	1	1	± 0.6 %	± 0.6 %	∞
Probe linearity	± 4.7 %	Rectangular	√ 3	1	1	± 2.7 %	± 2.7 %	∞
System detection limits	± 1.0 %	Rectangular	√ 3	1	1	± 0.6 %	± 0.6 %	∞
Modulation Response	± 2.4 %	Rectangular	√ 3	1	1	± 1.4 %	± 1.4 %	∞
Readout electronics	± 0.3 %	Normal	1	1	1	± 0.3 %	± 0.3 %	∞
Response time	± 0.8 %	Rectangular	√ 3	1	1	± 0.5 %	± 0.5 %	∞
Integration time	± 2.6 %	Rectangular	√ 3	1	1	± 1.5 %	± 1.5 %	∞
RF ambient noise	± 3.0 %	Rectangular	√ 3	1	1	± 1.7 %	± 1.7 %	∞
RF ambient reflections	± 3.0 %	Rectangular	√ 3	1	1	± 1.7 %	± 1.7 %	∞
Probe positioner	± 0.4 %	Rectangular	√ 3	1	1	± 0.2 %	± 0.2 %	∞
Probe positioning	± 2.9 %	Rectangular	√ 3	1	1	± 1.7 %	± 1.7 %	∞
Max. SAR evaluation	± 2.0 %	Rectangular	√ 3	1	1	± 1.2 %	± 1.2 %	∞
Test Sample Related								
Device positioning	± 2.9 %	Normal	1	1	1	± 2.9 %	± 2.9 %	145
Device holder uncertainty	± 3.6 %	Normal	1	1	1	± 3.6 %	± 3.6 %	5
Power drift	± 5.0 %	Rectangular	√ 3	1	1	± 2.9 %	± 2.9 %	∞
Phantom and Set-up								
Phantom uncertainty	± 6.1 %	Rectangular	√ 3	1	1	± 3.5 %	± 3.5 %	∞
SAR correction	± 1.9 %	Rectangular	√ 3	1	0.84	± 1.1 %	± 0.9 %	∞
Liquid conductivity (meas.)	± 5.0 %	Rectangular	√ 3	0.78	0.71	± 2.3 %	± 2.0 %	∞
Liquid permittivity (meas.)	± 5.0 %	Rectangular	√ 3	0.26	0.26	± 0.8 %	± 0.8 %	∞
Temp. Unc. - Conductivity	± 3.4 %	Rectangular	√ 3	0.78	0.71	± 1.5 %	± 1.4 %	∞
Temp. Unc. - Permittivity	± 0.4 %	Rectangular	√ 3	0.23	0.26	± 0.1 %	± 0.1 %	∞
Combined Uncertainty						± 11.3 %	± 11.3 %	330
Expanded Std. Uncertainty						± **22.7** %	± **22.5** %	

Table 5: Measurement uncertainties
Worst-Case uncertainty budget for DASY5 assessed according to IEEE 1528/2011 and IEC 62209-1/2011 draft standards. The budget is valid for the frequency range 300MHz -3 GHz and represents a worst-case analysis. For specific tests and configurations, the uncertainty could be considerable smaller.

Relative DASY5 Uncertainty Budget for SAR Tests								
According to IEC62209-2/2010 (30 MHz - 6 GHz range)								
Error Description	Uncertainty Value	Probability Distribution	Divisor	c_i	c_i	Standard Uncertainty		v_i^2 or v_{eff}
				(1g)	(10g)	± %, (1g)	± %, (10g)	
Measurement System								
Probe calibration	± 6.6 %	Normal	1	1	1	± 6.6 %	± 6.6 %	∞
Axial isotropy	± 4.7 %	Rectangular	√ 3	0.7	0.7	± 1.9 %	± 1.9 %	∞
Hemispherical isotropy	± 9.6 %	Rectangular	√ 3	0.7	0.7	± 3.9 %	± 3.9 %	∞
Boundary effects	± 2.0 %	Rectangular	√ 3	1	1	± 1.2 %	± 1.2 %	∞
Probe linearity	± 4.7 %	Rectangular	√ 3	1	1	± 2.7 %	± 2.7 %	∞
System detection limits	± 1.0 %	Rectangular	√ 3	1	1	± 0.6 %	± 0.6 %	∞
Modulation Response	± 2.4 %	Rectangular	√ 3	1	1	± 1.4 %	± 1.4 %	∞
Readout electronics	± 0.3 %	Normal	1	1	1	± 0.3 %	± 0.3 %	∞
Response time	± 0.8 %	Rectangular	√ 3	1	1	± 0.5 %	± 0.5 %	∞
Integration time	± 2.6 %	Rectangular	√ 3	1	1	± 1.5 %	± 1.5 %	∞
RF ambient noise	± 3.0 %	Rectangular	√ 3	1	1	± 1.7 %	± 1.7 %	∞
RF ambient reflections	± 3.0 %	Rectangular	√ 3	1	1	± 1.7 %	± 1.7 %	∞
Probe positioner	± 0.8 %	Rectangular	√ 3	1	1	± 0.5 %	± 0.5 %	∞
Probe positioning	± 6.7 %	Rectangular	√ 3	1	1	± 3.9 %	± 3.9 %	∞
Post-processing	± 4.0 %	Rectangular	√ 3	1	1	± 2.3 %	± 2.3 %	∞
Test Sample Related								
Device positioning	± 2.9 %	Normal	1	1	1	± 2.9 %	± 2.9 %	145
Device holder uncertainty	± 3.6 %	Normal	1	1	1	± 3.6 %	± 3.6 %	5
Power drift	± 5.0 %	Rectangular	√ 3	1	1	± 2.9 %	± 2.9 %	∞
Phantom and Set-up								
Phantom uncertainty	± 7.9 %	Rectangular	√ 3	1	1	± 4.6 %	± 4.6 %	∞
SAR correction	± 1.9 %	Rectangular	√ 3	1	0.84	± 1.1 %	± 0.9 %	∞
Liquid conductivity (meas.)	± 5.0 %	Rectangular	√ 3	0.78	0.71	± 2.3 %	± 2.0 %	∞
Liquid permittivity (meas.)	± 5.0 %	Rectangular	√ 3	0.26	0.26	± 0.8 %	± 0.8 %	∞
Temp. Unc. - Conductivity	± 3.4 %	Rectangular	√ 3	0.78	0.71	± 1.5 %	± 1.4 %	∞
Temp. Unc. - Permittivity	± 0.4 %	Rectangular	√ 3	0.23	0.26	± 0.1 %	± 0.1 %	∞
Combined Uncertainty						± 12.7 %	± 12.6 %	330
Expanded Std. Uncertainty						± **25.4** %	± **25.3** %	

Table 6: Measurement uncertainties. Worst-Case uncertainty budget for DASY5 assessed according to according to IEC 62209-2/2010 standard. The budget is valid for the frequency range 30MHz - 6 GHz and represents a worst-case analysis. For specific tests and configurations, the uncertainty could be considerable smaller.

Relative DASY5 Uncertainty Budget for SAR Tests								
According to IEEE 1528-2003, IEC 62209-1 for the 3-6 GHz range								
Error Description	Uncertainty Value	Probability Distribution	Divisor	c_i	c_i	Standard Uncertainty		v_i^2 or v_{eff}
				(1g)	(10g)	± %, (1g)	± %, (10g)	
Measurement System								
Probe calibration	± 6.6 %	Normal	1	1	1	± 6.6 %	± 6.6 %	∞
Axial isotropy	± 4.7 %	Rectangular	√ 3	0.7	0.7	± 1.9 %	± 1.9 %	∞
Hemispherical isotropy	± 9.6 %	Rectangular	√ 3	0.7	0.7	± 3.9 %	± 3.9 %	∞
Boundary effects	± 2.0 %	Rectangular	√ 3	1	1	± 1.2 %	± 1.2 %	∞
Probe linearity	± 4.7 %	Rectangular	√ 3	1	1	± 2.7 %	± 2.7 %	∞
System detection limits	± 1.0 %	Rectangular	√ 3	1	1	± 0.6 %	± 0.6 %	∞
Readout electronics	± 0.3 %	Normal	1	1	1	± 0.3 %	± 0.3 %	∞
Response time	± 0.8 %	Rectangular	√ 3	1	1	± 0.5 %	± 0.5 %	∞
Integration time	± 2.6 %	Rectangular	√ 3	1	1	± 1.5 %	± 1.5 %	∞
RF ambient noise	± 3.0 %	Rectangular	√ 3	1	1	± 1.7 %	± 1.7 %	∞
RF ambient reflections	± 3.0 %	Rectangular	√ 3	1	1	± 1.7 %	± 1.7 %	∞
Probe positioner	± 0.8 %	Rectangular	√ 3	1	1	± 0.5 %	± 0.5 %	∞
Probe positioning	± 6.7 %	Rectangular	√ 3	1	1	± 3.9 %	± 3.9 %	∞
Max. SAR evaluation	± 4.0 %	Rectangular	√ 3	1	1	± 2.3 %	± 2.3 %	∞
Test Sample Related								
Device positioning	± 2.9 %	Normal	1	1	1	± 2.9 %	± 2.9 %	145
Device holder uncertainty	± 3.6 %	Normal	1	1	1	± 3.6 %	± 3.6 %	5
Power drift	± 5.0 %	Rectangular	√ 3	1	1	± 2.9 %	± 2.9 %	∞
Phantom and Set-up								
Phantom uncertainty	± 4.0 %	Rectangular	√ 3	1	1	± 2.3 %	± 2.3 %	∞
Liquid conductivity (target)	± 5.0 %	Rectangular	√ 3	0.64	0.43	± 1.8 %	± 1.2 %	∞
Liquid conductivity (meas.)	± 5.0 %	Rectangular	√ 3	0.64	0.43	± 1.8 %	± 1.2 %	∞
Liquid permittivity (target)	± 5.0 %	Rectangular	√ 3	0.6	0.49	± 1.7 %	± 1.4 %	∞
Liquid permittivity (meas.)	± 5.0 %	Rectangular	√ 3	0.6	0.49	± 1.7 %	± 1.4 %	∞
Combined Uncertainty						± 12.1 %	± 11.9 %	330
Expanded Std. Uncertainty						± **24.3** %	± **23.8** %	

Table 7: Measurement uncertainties
Worst-Case uncertainty budget for DASY5 valid for 3G communication signals and frequency range 3 - 6 GHz. Probe calibration error reflects uncertainty of the EX3D probe. For specific tests and configurations, the uncertainty could be considerable smaller.

Relative DASY5 Uncertainty Budget for SAR Tests								
According to IEEE 1528/2011 and IEC62209-1/2011 (3-6GHz range)								
Error Description	Uncertainty Value	Probability Distribution	Divisor	c_i	c_i	Standard Uncertainty		v_i^2 or v_{eff}
				(1g)	(10g)	± %, (1g)	± %, (10g)	
Measurement System								
Probe calibration	± 6.6 %	Normal	1	1	1	± 6.6 %	± 6.6 %	∞
Axial isotropy	± 4.7 %	Rectangular	√ 3	0.7	0.7	± 1.9 %	± 1.9 %	∞
Hemispherical isotropy	± 9.6 %	Rectangular	√ 3	0.7	0.7	± 3.9 %	± 3.9 %	∞
Boundary effects	± 2.0 %	Rectangular	√ 3	1	1	± 1.2 %	± 1.2 %	∞
Probe linearity	± 4.7 %	Rectangular	√ 3	1	1	± 2.7 %	± 2.7 %	∞
System detection limits	± 1.0 %	Rectangular	√ 3	1	1	± 0.6 %	± 0.6 %	∞
Modulation Response	± 2.4 %	Rectangular	√ 3	1	1	± 1.4 %	± 1.4 %	∞
Readout electronics	± 0.3 %	Normal	1	1	1	± 0.3 %	± 0.3 %	∞
Response time	± 0.8 %	Rectangular	√ 3	1	1	± 0.5 %	± 0.5 %	∞
Integration time	± 2.6 %	Rectangular	√ 3	1	1	± 1.5 %	± 1.5 %	∞
RF ambient noise	± 3.0 %	Rectangular	√ 3	1	1	± 1.7 %	± 1.7 %	∞
RF ambient reflections	± 3.0 %	Rectangular	√ 3	1	1	± 1.7 %	± 1.7 %	∞
Probe positioner	± 0.8 %	Rectangular	√ 3	1	1	± 0.5 %	± 0.5 %	∞
Probe positioning	± 6.7 %	Rectangular	√ 3	1	1	± 3.9 %	± 3.9 %	∞
Max. SAR evaluation	± 4.0 %	Rectangular	√ 3	1	1	± 2.3 %	± 2.3 %	∞
Test Sample Related								
Device positioning	± 2.9 %	Normal	1	1	1	± 2.9 %	± 2.9 %	145
Device holder uncertainty	± 3.6 %	Normal	1	1	1	± 3.6 %	± 3.6 %	5
Power drift	± 5.0 %	Rectangular	√ 3	1	1	± 2.9 %	± 2.9 %	∞
Phantom and Set-up								
Phantom uncertainty	± 6.6 %	Rectangular	√ 3	1	1	± 3.8 %	± 3.8 %	∞
SAR correction	± 1.9 %	Rectangular	√ 3	1	0.84	± 1.1 %	± 0.9 %	∞
Liquid conductivity (meas.)	± 5.0 %	Rectangular	√ 3	0.78	0.71	± 2.3 %	± 2.0 %	∞
Liquid permittivity (meas.)	± 5.0 %	Rectangular	√ 3	0.26	0.26	± 0.8 %	± 0.8 %	∞
Temp. Unc. - Conductivity	± 3.4 %	Rectangular	√ 3	0.78	0.71	± 1.5 %	± 1.4 %	∞
Temp. Unc. - Permittivity	± 0.4 %	Rectangular	√ 3	0.23	0.26	± 0.1 %	± 0.1 %	∞
Combined Uncertainty						± 12.4 %	± 12.4 %	330
Expanded Std. Uncertainty						± **24.9** %	± **24.8** %	

Table 8: Measurement uncertainties
Worst-Case uncertainty budget for DASY5 assessed according to IEEE 1528/2011 and IEC 62209-1/2011 draft standards. The budget is valid for the frequency range 3GHz -6GHz and represents a worst-case analysis. For specific tests and configurations, the uncertainty could be considerable smaller.

6.1.13 Measurement uncertainty evaluation for System Check

Uncertainty of a System Performance Check with DASY5 System for the 0.3 - 3 GHz range								
Source of uncertainty	Uncertainty Value	Probability Distribution	Divisor	c_i (1g)	c_i (10g)	Standard Uncertainty ± %, (1g)	Standard Uncertainty ± %, (10g)	v_i^2 or v_{eff}
Measurement System								
Probe calibration	± 6.0 %	Normal	1	1	1	± 6.0 %	± 6.0 %	∞
Axial isotropy	± 4.7 %	Rectangular	√ 3	0.7	0.7	± 1.9 %	± 1.9 %	∞
Hemispherical isotropy	± 0.0 %	Rectangular	√ 3	0.7	0.7	± 0.0 %	± 0.0 %	∞
Boundary effects	± 1.0 %	Rectangular	√ 3	1	1	± 0.6 %	± 0.6 %	∞
Probe linearity	± 4.7 %	Rectangular	√ 3	1	1	± 2.7 %	± 2.7 %	∞
System detection limits	± 1.0 %	Rectangular	√ 3	1	1	± 0.6 %	± 0.6 %	∞
Readout electronics	± 0.3 %	Normal	1	1	1	± 0.3 %	± 0.3 %	∞
Response time	± 0.0 %	Rectangular	√ 3	1	1	± 0.0 %	± 0.0 %	∞
Integration time	± 0.0 %	Rectangular	√ 3	1	1	± 0.0 %	± 0.0 %	∞
RF ambient conditions	± 3.0 %	Rectangular	√ 3	1	1	± 1.7 %	± 1.7 %	∞
Probe positioner	± 0.4 %	Rectangular	√ 3	1	1	± 0.2 %	± 0.2 %	∞
Probe positioning	± 2.9 %	Rectangular	√ 3	1	1	± 1.7 %	± 1.7 %	∞
Max. SAR evaluation	± 1.0 %	Rectangular	√ 3	1	1	± 0.6 %	± 0.6 %	∞
Test Sample Related								
Dev. of experimental dipole	± 0.0 %	Rectangular	√ 3	1	1	± 0.0 %	± 0.0 %	∞
Source to liquid distance	± 2.0 %	Rectangular	√ 3	1	1	± 1.2 %	± 1.2 %	∞
Power drift	± 3.4 %	Rectangular	√ 3	1	1	± 2.0 %	± 2.0 %	∞
Phantom and Set-up								
Phantom uncertainty	± 4.0 %	Rectangular	√ 3	1	1	± 2.3 %	± 2.3 %	∞
SAR correction	± 1.9 %	Rectangular	√ 3	1	0.84	± 1.1 %	± 0.9 %	∞
Liquid conductivity (meas.)	± 5.0 %	Normal	1	0.78	0.71	± 3.9 %	± 3.6 %	∞
Liquid permittivity (meas.)	± 5.0 %	Normal	1	0.26	0.26	± 1.3 %	± 1.3 %	∞
Temp. unc. - Conductivity	± 1.7 %	Rectangular	√ 3	0.78	0.71	± 0.8 %	± 0.7 %	∞
Temp. unc. - Permittivity	± 0.3 %	Rectangular	√ 3	0.23	0.26	± 0.0 %	± 0.0 %	∞
Combined Uncertainty						± 9.1 %	± 8.9 %	330
Expanded Std. Uncertainty						± **18.2** %	± **17.9** %	

Table 9: Measurement uncertainties of the System Check with DASY5 (0.3-3GHz)

Uncertainty of a System Performance Check with DASY5 System for the 3 - 6 GHz range								
Source of uncertainty	Uncertainty Value	Probability Distribution	Divisor	c_i (1g)	c_i (10g)	Standard Uncertainty ± %, (1g)	Standard Uncertainty ± %, (10g)	v_i^2 or v_{eff}
Measurement System								
Probe calibration	± 6.6 %	Normal	1	1	1	± 6.6 %	± 6.6 %	∞
Axial isotropy	± 4.7 %	Rectangular	√ 3	0.7	0.7	± 1.9 %	± 1.9 %	∞
Hemispherical isotropy	± 0.0 %	Rectangular	√ 3	0.7	0.7	± 0.0 %	± 0.0 %	∞
Boundary effects	± 1.0 %	Rectangular	√ 3	1	1	± 0.6 %	± 0.6 %	∞
Probe linearity	± 4.7 %	Rectangular	√ 3	1	1	± 2.7 %	± 2.7 %	∞
System detection limits	± 1.0 %	Rectangular	√ 3	1	1	± 0.6 %	± 0.6 %	∞
Readout electronics	± 0.3 %	Normal	1	1	1	± 0.3 %	± 0.3 %	∞
Response time	± 0.0 %	Rectangular	√ 3	1	1	± 0.0 %	± 0.0 %	∞
Integration time	± 0.0 %	Rectangular	√ 3	1	1	± 0.0 %	± 0.0 %	∞
RF ambient conditions	± 3.0 %	Rectangular	√ 3	1	1	± 1.7 %	± 1.7 %	∞
Probe positioner	± 0.8 %	Rectangular	√ 3	1	1	± 0.5 %	± 0.5 %	∞
Probe positioning	± 6.7 %	Rectangular	√ 3	1	1	± 3.9 %	± 3.9 %	∞
Max. SAR evaluation	± 1.0 %	Rectangular	√ 3	1	1	± 0.6 %	± 0.6 %	∞
Test Sample Related								
Dev. of experimental dipole	± 0.0 %	Rectangular	√ 3	1	1	± 0.0 %	± 0.0 %	∞
Source to liquid distance	± 2.0 %	Rectangular	√ 3	1	1	± 1.2 %	± 1.2 %	∞
Power drift	± 3.4 %	Rectangular	√ 3	1	1	± 2.0 %	± 2.0 %	∞
Phantom and Set-up								
Phantom uncertainty	± 4.0 %	Rectangular	√ 3	1	1	± 2.3 %	± 2.3 %	∞
SAR correction	± 1.9 %	Rectangular	√ 3	1	0.84	± 1.1 %	± 0.9 %	∞
Liquid conductivity (meas.)	± 5.0 %	Normal	1	0.78	0.71	± 3.9 %	± 3.6 %	∞
Liquid permittivity (meas.)	± 5.0 %	Normal	1	0.26	0.26	± 1.3 %	± 1.3 %	∞
Temp. unc. - Conductivity	± 1.7 %	Rectangular	√ 3	0.78	0.71	± 0.8 %	± 0.7 %	∞
Temp. unc. - Permittivity	± 0.3 %	Rectangular	√ 3	0.23	0.26	± 0.0 %	± 0.0 %	∞
Combined Uncertainty						± 10.1 %	± 10.0 %	330
Expanded Std. Uncertainty						± **20.2** %	± **19.9** %	

Table 10: Measurement uncertainties of the System Check with DASY5 (3-6GHz)

Note: Worst case probe calibration uncertainty has been applied for all probes used during the measurements.

6.1.14 System check

The system check is performed for verifying the accuracy of the complete measurement system and performance of the software. The system check is performed with tissue equivalent material according to IEEE 1528. The following table shows system check results for all frequency bands and tissue liquids used during the tests (plot(s) see annex A).

System performence check (1000 mW)								
System validation Kit	Frequency	Target SAR_{1g} /mW/g (+/- 10%)	Target SAR_{10g} /mW/g (+/- 10%)	Measured SAR_{1g} mW/g	SAR_{1g} dev. %	Measured SAR_{10g} mW/g	SAR_{10g} dev. %	Measured date
D750V3 S/N: 1041	750 MHz body	8.75	5.79	8.84	1.0%	5.87	1.4%	2014-03-19
D835V2 S/N: 4d153	835 MHz body	9.40	6.12	9.97	6.1%	6.56	7.2%	2014-03-12
D835V2 S/N: 4d153	835 MHz body	9.40	6.12	9.49	1.0%	6.25	2.1%	2014-03-13
D1750V2 S/N: 1093	1750 MHz body	37.90	20.30	36.60	-3.4%	19.60	-3.4%	2014-03-15
D1900V2 S/N: 5d009	1900 MHz body	40.90	21.70	39.60	-3.2%	20.80	-4.1%	2014-03-13
D1900V2 S/N: 5d009	1900 MHz body	40.90	21.70	38.20	-6.6%	20.10	-7.4%	2014-03-14
D2450V2 S/N: 710	2450 MHz body	51.20	23.90	53.60	4.7%	24.80	3.8%	2014-03-17
D2600V2 S/N: 1040	2600 MHz body	56.80	25.40	60.20	6.0%	26.50	4.3%	2014-03-18
D5GHzV2 S/N: 1055	5200 MHz body	74.20	20.80	73.40	-1.1%	20.90	0.5%	2014-03-19
D5GHzV2 S/N: 1055	5500 MHz body	77.90	21.70	74.50	-4.4%	20.80	-4.1%	2014-03-19
D5GHzV2 S/N: 1055	5800 MHz body	73.30	20.20	78.20	6.7%	21.90	8.4%	2014-03-19

Table 11: Results system check

6.1.15 System check procedure

The system check is performed by using a validation dipole which is positioned parallel to the planar part of the SAM phantom at the reference point. The distance of the dipole to the SAM phantom is determined by a plexiglass spacer. The dipole is connected to the signal source consisting of signal generator and amplifier via a directional coupler, N-connector cable and adaption to SMA. It is fed with a power of 1000 mW for frequencies below 2 GHz or 100 mW for frequencies above 2 GHz. To adjust this power a power meter is used. The power sensor is connected to the cable before the system check to measure the power at this point and do adjustments at the signal generator. At the outputs of the directional coupler both return loss as well as forward power are controlled during the validation to make sure that emitted power at the dipole is kept constant. This can also be checked by the power drift measurement after the test (result on plot).
System check results have to be equal or near the values determined during dipole calibration (target SAR in table above) with the relevant liquids and test system.

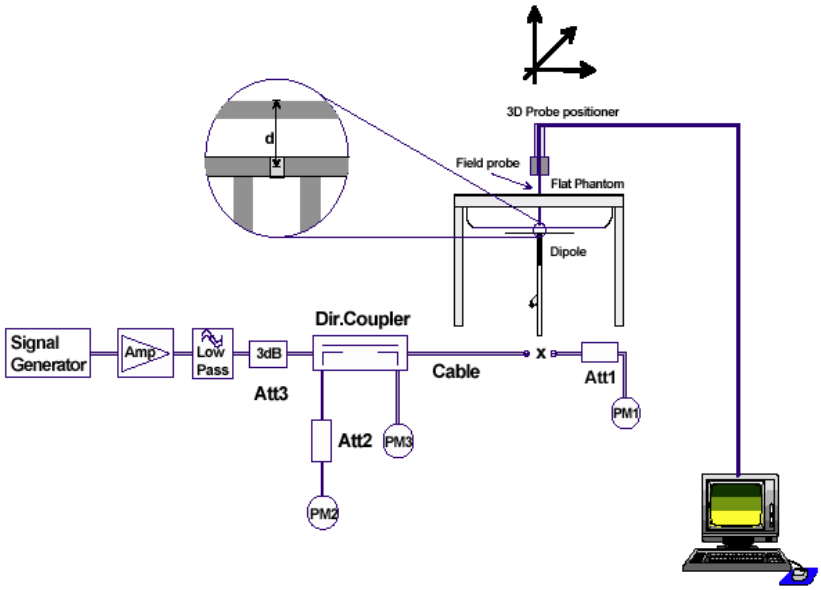

6.1.16 System validation

The system validation is performed in a similar way as a system check. It needs to be performed once a SAR measurement system has been established and allows an evaluation of the system accuracy with all components used together with the specified system. It has to be repeated at least once a year or when new system components are used (DAE, probe, phantom, dipole, liquid type).
In addition to the procedure used during system check a system validation also includes checks of probe isotropy, probe modulation factor and RF signal.

The following table lists the system validations relevant for this test report:

Probe Calibration Point	Test	DASY	Dipole	Probe	Calibrated signal type(s)	DAE unit	Validation done	
f / MHz	System	SW	Type / SN	Type / SN		Type / SN	Head tissue simulant	Body tissue simulant
750	Saarbrücken / SAR-1	V52.8.7	D750V2 / 1041	ES3DV3 / 3320	CW	DAE3/ 413	2014-01	2014-01
835	Saarbrücken / SAR-1	V52.8.7	D835V2 / 4d153	ES3DV3 / 3320	CW	DAE3/ 413	2014-01	2014-01
1750	Saarbrücken / SAR-1	V52.8.7	D1750V2 / 1093	ES3DV3 / 3320	CW	DAE3 / 413	2014-01	2014-01
1900	Saarbrücken / SAR-1	V52.8.7	D1900V2 / 5d009	ES3DV3 / 3320	CW	DAE3 / 413	2014-01	2014-01
2450	Saarbrücken / SAR-1	V52.8.7	D2450V2 / 710	ES3DV3 / 3320	CW	DAE3 / 413	2014-01	2014-01
5200	Saarbrücken / SAR-1	V52.8.7	D5GHzV2 / 1055	EX3DV4 / 3944	CW	DAE3 / 413	2014-01	2014-01
5500	Saarbrücken / SAR-1	V52.8.7	D5GHzV2 / 1055	EX3DV4 / 3944	CW	DAE3 / 413	2014-01	2014-01
5800	Saarbrücken / SAR-1	V52.8.7	D5GHzV2 / 1055	EX3DV4 / 3944	CW	DAE3 / 413	2014-01	2014-01

7 Detailed Test Results

8 Detailed Test Results

The DUT is equipped with two proximity sensors to reduce the output power if a person is close to the main antenna. The position of the sensors and antenna are as shown in the graphic.

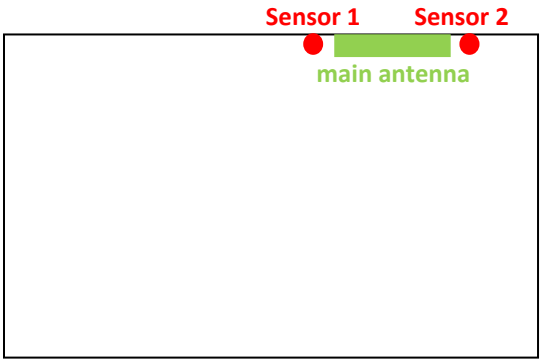

According to KDB 616217 D04 SAR for laptop and tablets v01r01 the functionality of the sensors has to be approved for different aspects:

- Triggering distances
- Sensor coverage of the relevant area
- Sensor functionality in tilted positions
- Safety mechanisms in case of sensor Malfunction
- Material dependency of the triggering distances

8.1.1 Proximity sensor test result overview

The proximity sensor tests were performed by the applicant itself. The detailed test results are attached in **Annex E: Proximity sensor data.**

Final verdicts of proximity testing are given in the following paragraphs.

8.1.2 Power reduction:

When one of the sensors is triggered the power will be reduced according to the following table:

Operating mode	Power reduction [dB]
GSM 850	> 3.6
GSM 1900	> 6.2
UMTS FDD II	> 11.0
UMTS FDD V	> 4.2
LTE FDD 2	> 7.0
LTE FDD 4	> 7.2
LTE FDD 7	> 4.6
LTE FDD 13	> 1.4
C2K BC0	> 4.3
C2K BC1	> 10.3

More detailed information can be seen in **CONDUCTED MEASUREMENTS RESULTS.**

8.1.3 Resulting test positions for SAR measurements.

The smallest separation distance determined during triggering distance, sensor coverage and tilt angle test is selected for SAR measurements. Final verdict of safety distance:

position	triggering distance	coverage	tilting	resulting measurement distance for SAR
top edge	10	12	10	**10 mm**
rear	16	17	---	**16 mm**

8.1.4 Safety measures in case of sensor malfunctions

The operational description contains information explaining how the device remains compliant in the event of a sensor malfunction.

8.2 Conducted power measurements

For the measurements a Rohde & Schwarz Radio Communication Tester CMU 200 was used.
The output power was measured using an integrated RF connector and attached RF cable.
The conducted output power was also checked before and after each SAR measurement. The resulting power values were within a 0.2 dB tolerance of the values shown below.

Note: CMU200 measures GSM peak and average output power for active timeslots.
For SAR the time based average power is relevant. The difference in-between depends on the duty cycle of the TDMA signal:

No. of timeslots	***1***	***2***	***3***	***4***
Duty Cycle	1 : 8	1: 4	1 : 2.66	1 : 2
time based avg. power compared to slotted avg. power	- 9 dB	- 6 dB	- 4.25 dB	- 3 dB

The signalling modes differ as follows :

mode	***coding scheme***	***modulation***
GPRS	CS1 to CS4	GMSK
EGPRS (EDGE)	MCS1 to MCS4	GMSK
EGPRS (EDGE)	MCS5 to MCS9	8PSK

Apart from modulation change (GMSK/8PSK) coding schemes differ in code rate without influence on the RF signal. Therefore one coding scheme per mode was selected for conducted power measurements.

8.2.1 Conducted power measurements GSM 850 MHz

Channel / frequency	modulation	timeslots	slotted avg. Power (dBm)			calculated time based avg. Power (dBm)		Multi slot class / power class
			full	**back off**	**diff.**	full	**back off**	
128 / 824.2 MHz	GMSK	1	32.3	28.7	3.6	23.3	19.7	33 / 4
190 / 836.6 MHz	GMSK	1	32.3	28.7	3.6	23.3	19.7	33 / 4
251 / 848.0 MHz	GMSK	1	32.4	28.5	3.9	23.4	19.5	33 / 4
128 / 824.2 MHz	GMSK	2	30.1	**26.2**	3.9	24.1	20.2	33 / 4
190 / 836.6 MHz	GMSK	2	30.0	**26.2**	3.8	24.0	20.2	33 / 4
251 / 848.0 MHz	GMSK	2	30.2	**26.3**	3.9	24.2	20.3	33 / 4
128 / 824.2 MHz	**GMSK**	**3**	**28.2**	24.5	3.7	**24.0**	20.3	33 / 4
190 / 836.6 MHz	**GMSK**	**3**	**28.4**	24.3	4.1	**24.2**	20.1	33 / 4
251 / 848.0 MHz	**GMSK**	**3**	**28.3**	24.3	4.0	**24.1**	20.1	33 / 4
128 / 824.2 MHz	GMSK	4	27.1	22.9	4.2	24.1	19.9	33 / 4
190 / 836.6 MHz	GMSK	4	27.0	23.0	4.0	24.0	20.0	33 / 4
251 / 848.0 MHz	GMSK	4	27.0	23.0	4.0	24.0	20.0	33 / 4
128 / 824.2 MHz	8PSK	1	26.8	26.9	-0.1	17.8	17.9	33 / E2
190 / 836.6 MHz	8PSK	1	26.8	26.8	0.0	17.8	17.8	33 / E2
251 / 848.0 MHz	8PSK	1	26.9	26.9	0.0	17.9	17.9	33 / E2
128 / 824.2 MHz	8PSK	2	24.8	25.0	-0.2	18.8	19.0	33 / E2
190 / 836.6 MHz	8PSK	2	24.8	24.9	-0.1	18.8	18.9	33 / E2
251 / 848.0 MHz	8PSK	2	24.9	25.0	-0.1	18.9	19.0	33 / E2
128 / 824.2 MHz	8PSK	3	24.0	23.8	0.2	19.8	19.6	33 / E2
190 / 836.6 MHz	8PSK	3	23.9	23.8	0.1	19.7	19.6	33 / E2
251 / 848.0 MHz	8PSK	3	24.1	23.9	0.2	19.9	19.7	33 / E2
128 / 824.2 MHz	8PSK	4	21.8	21.9	-0.1	18.8	18.9	33 / E2
190 / 836.6 MHz	8PSK	4	22.0	21.8	0.2	19.0	18.8	33 / E2
251 / 848.0 MHz	8PSK	4	22.0	21.9	0.1	19.0	18.9	33 / E2

Table 12: Test results conducted power measurement GSM 850 MHz

8.2.2 Conducted power measurements GSM 1900 MHz

Channel / frequency	modulation	timeslots	slotted avg. Power (dBm)			calculated time based avg. Power (dBm)		Multi slot class / power class
			full	**back off**	**diff.**	full	**back off**	
512 / 1850.2 MHz	GMSK	1	30.0	22.1	7.9	21.0	13.1	33 / 1
661 / 1880.0 MHz	GMSK	1	29.9	22.3	7.6	20.9	13.3	33 / 1
810 / 1909.8 MHz	GMSK	1	30.0	22.4	7.6	21.0	13.4	33 / 1
512 / 1850.2 MHz	GMSK	2	26.9	**19.2**	7.7	20.9	13.2	33 / 1
661 / 1880.0 MHz	GMSK	2	27.4	**19.5**	7.9	21.4	13.5	33 / 1
810 / 1909.8 MHz	GMSK	2	27.0	**19.6**	7.4	21.0	13.6	33 / 1
512 / 1850.2 MHz	GMSK	3	25.8	17.1	8.7	21.6	12.9	33 / 1
661 / 1880.0 MHz	GMSK	3	26.0	17.2	8.8	21.8	13.0	33 / 1
810 / 1909.8 MHz	GMSK	3	26.0	17.4	8.6	21.8	13.2	33 / 1
512 / 1850.2 MHz	**GMSK**	**4**	**25.0**	16.1	8.9	**22.0**	13.1	33 / 1
661 / 1880.0 MHz	**GMSK**	**4**	**25.1**	16.3	8.8	**22.1**	13.3	33 / 1
810 / 1909.8 MHz	**GMSK**	**4**	**25.2**	16.3	8.9	**22.2**	13.3	33 / 1
512 / 1850.2 MHz	8PSK	1	25.9	19.4	6.5	16.9	10.4	33 / E2
661 / 1880.0 MHz	8PSK	1	26.0	19.6	6.4	17.0	10.6	33 / E2
810 / 1909.8 MHz	8PSK	1	25.9	19.7	6.2	16.9	10.7	33 / E2
512 / 1850.2 MHz	8PSK	2	23.7	16.9	6.8	17.7	10.9	33 / E2
661 / 1880.0 MHz	8PSK	2	23.7	17.1	6.6	17.7	11.1	33 / E2
810 / 1909.8 MHz	8PSK	2	23.8	17.1	6.7	17.8	11.1	33 / E2
512 / 1850.2 MHz	8PSK	3	22.8	16.0	6.8	18.6	11.8	33 / E2
661 / 1880.0 MHz	8PSK	3	23.0	16.2	6.8	18.8	12.0	33 / E2
810 / 1909.8 MHz	8PSK	3	23.0	16.5	6.5	18.8	12.3	33 / E2
512 / 1850.2 MHz	8PSK	4	22.0	14.6	7.4	19.0	11.6	33 / E2
661 / 1880.0 MHz	8PSK	4	22.1	15.0	7.1	19.1	12.0	33 / E2
810 / 1909.8 MHz	8PSK	4	22.2	14.9	7.3	19.2	11.9	33 / E2

Table 13: Test results conducted power measurement GSM 1900 MHz

8.2.3 Justification of SAR measurements in GSM mode

SAR measurements were performed in the configuration with highest calculated time based averaged output power **(bold)**.
These are different for full power and power back off configurations.

Frequency band	Power Configuration	Slot configuration
GSM 850	Full power	3
GSM 850	Power back off	2
GSM 1900	Full power	4
GSM 1900	Power back off	2

The used slot configurations, measured output power and corresponding maximum power from tune-up information are listed in SAR test result tables.

8.2.4 Conducted power measurements WCDMA FDD V (850 MHz)

Max. RMS output power 850 MHz (FDD V) / dBm									
	Channel / frequency								
	4132 / 826.4 MHz			4182 / 836.6 MHz			4233 / 846.6 MHz		
mode	full	**back off**	**diff.**	full	**back off**	**diff.**	full	**back off**	**diff.**
RMC 12.2 kbit/s	**24.0**	**19.7**	**4.3**	**24.0**	**19.7**	**4.3**	**24.0**	**19.7**	**4.3**
RMC 64 kbit/s	23.9	19.7	4.2	24.0	19.7	4.3	23.9	19.6	4.3
RMC 144 kbit/s	24.0	19.7	4.3	24.0	19.7	4.3	24.0	19.7	4.3
RMC 384 kbit/s	24.0	19.7	4.3	24.0	19.7	4.3	24.0	19.6	4.4
AMR 4.75 kbit/s	23.9	19.7	4.2	23.9	19.6	4.3	23.9	19.6	4.3
AMR 5.15 kbit/s	23.9	19.7	4.2	24.0	19.6	4.4	24.0	19.5	4.5
AMR 5.9 kbit/s	23.9	19.7	4.2	23.9	19.7	4.2	23.9	19.6	4.3
AMR 6.7 kbit/s	23.9	19.7	4.2	23.9	19.6	4.3	23.9	19.5	4.4
AMR 7.4 kbit/s	23.9	19.6	4.3	23.9	19.6	4.3	24.0	19.6	4.4
AMR 7.95 kbit/s	23.9	19.6	4.3	23.9	19.7	4.2	24.0	19.5	4.5
AMR 10.2 kbit/s	23.9	19.7	4.2	24.0	19.7	4.3	23.9	19.6	4.3
AMR 12.2 kbit/s	23.9	19.7	4.2	23.9	19.7	4.2	23.9	19.6	4.3
HSDPA Sub test 1	**23.4**	**19.2**	**4.2**	**23.4**	**19.2**	**4.2**	**23.3**	**19.1**	**4.2**
HSDPA Sub test 2	22.1	17.7	4.4	22.1	17.8	4.3	22.1	17.7	4.4
HSDPA Sub test 3	21.3	16.8	4.5	21.3	16.9	4.4	21.3	16.8	4.5
HSDPA Sub test 4	21.2	16.7	4.5	21.3	16.8	4.5	21.2	16.8	4.4
DC-HSDPA Sub test 1	**23.4**	**19.2**	**4.2**	**23.4**	**19.2**	**4.2**	**23.3**	**19.1**	**4.2**
DC-HSDPA Sub test 2	23.4	19.1	4.3	23.4	19.1	4.3	23.3	19.1	4.2
DC-HSDPA Sub test 3	22.9	18.5	4.4	22.9	18.6	4.3	22.8	18.5	4.3
DC-HSDPA Sub test 4	22.9	18.5	4.4	22.8	18.5	4.3	22.8	18.5	4.3
HSUPA Sub test 1	23.5	18.8	4.7	23.3	18.8	4.5	23.2	18.9	4.3
HSUPA Sub test 2	21.4	16.4	5.0	21.6	16.4	5.2	21.4	16.5	4.9
HSUPA Sub test 3	22.8	17.3	5.5	22.9	17.3	5.6	22.8	17.4	5.4
HSUPA Sub test 4	21.5	16.5	5.0	21.5	16.5	5.0	21.6	16.5	5.1
HSUPA Sub test 5	**23.3**	**18.8**	**4.5**	**23.3**	**18.8**	**4.5**	**23.3**	**18.9**	**4.4**

Table 14: Test results conducted power measurement UMTS FDD V 850MHz

8.2.5 Conducted power measurements WCDMA FDD II (1900 MHz)

Max. RMS output power FDD II (1900MHz) / dBm									
	Channel / frequency								
	9262 / 1852.4 MHz			9400 / 1880.0 MHz			9538 / 1907.6 MHz		
mode	full	**back off**	**diff.**	full	**back off**	**diff.**	full	**back off**	**diff.**
RMC 12.2 kbit/s	**23.8**	**12.4**	**11.4**	**24.1**	**11.9**	**12.2**	**24.0**	**12.6**	**11.4**
RMC 64 kbit/s	23.8	12.3	11.5	24.0	11.9	12.1	24.0	12.5	11.5
RMC 144 kbit/s	23.8	12.3	11.5	24.0	11.9	12.1	24.0	12.6	11.4
RMC 384 kbit/s	23.8	12.4	11.4	24.1	11.9	12.2	23.9	12.6	11.3
AMR 4.75 kbit/s	23.8	12.4	11.4	24.0	11.8	12.2	23.9	12.5	11.4
AMR 5.15 kbit/s	23.8	12.3	11.5	24.0	11.8	12.2	24.0	12.5	11.5
AMR 5.9 kbit/s	23.8	12.3	11.5	24.0	11.9	12.1	24.0	12.6	11.4
AMR 6.7 kbit/s	23.8	12.4	11.4	24.0	11.9	12.1	23.9	12.6	11.3
AMR 7.4 kbit/s	23.8	12.3	11.5	24.0	11.9	12.1	24.0	12.6	11.4
AMR 7.95 kbit/s	23.8	12.3	11.5	24.0	11.9	12.1	23.9	12.5	11.4
AMR 10.2 kbit/s	23.8	12.3	11.5	24.0	11.9	12.1	24.0	12.5	11.5
AMR 12.2 kbit/s	23.8	12.4	11.4	24.0	11.9	12.1	23.9	12.6	11.3
HSDPA Sub test 1	**22.9**	**11.9**	**11.0**	**23.4**	**11.5**	**11.9**	**23.4**	**12.0**	**11.4**
HSDPA Sub test 2	22.1	10.4	11.7	22.3	10.2	12.1	22.0	10.3	11.7
HSDPA Sub test 3	21.8	9.6	12.2	21.7	9.5	12.2	21.6	9.4	12.2
HSDPA Sub test 4	21.7	9.6	12.1	21.6	9.4	12.2	21.5	9.4	12.1
DC-HSDPA Sub test 1	**22.9**	**11.9**	**11.0**	**23.3**	**11.9**	**11.4**	**23.3**	**12.0**	**11.3**
DC-HSDPA Sub test 2	23.0	11.8	11.2	23.4	11.8	11.6	23.3	12.0	11.3
DC-HSDPA Sub test 3	22.3	11.3	11.0	22.9	11.2	11.7	22.8	11.4	11.4
DC-HSDPA Sub test 4	22.3	11.3	11.0	22.9	11.2	11.7	22.7	11.4	11.3
HSUPA Sub test 1	22.8	11.5	11.3	23.4	11.5	11.9	23.3	11.6	11.7
HSUPA Sub test 2	20.9	9.6	11.3	21.6	10.4	11.2	21.5	10.4	11.1
HSUPA Sub test 3	21.6	10.6	11.0	22.6	11.2	11.4	22.5	11.3	11.2
HSUPA Sub test 4	20.8	9.7	11.1	21.5	10.3	11.2	21.6	10.2	11.4
HSUPA Sub test 5	**22.7**	**11.5**	**11.2**	**23.2**	**11.4**	**11.8**	**23.2**	**11.6**	**11.6**

Table 15: Test results conducted power measurement UMTS FDD II 1900MHz

Remark: None of the HSDPA/HSUPA settings leads to conducted power values exceeding the conducted power in RMC mode by more than 0.25 dB.
Therefore no additional SAR measurements were performed in HSDPA/HSUPA mode.

8.2.6 Test-set-up information for WCDMA / HSPDA / HSUPA

a) WCDMA RMC

In RMC (reference measurement channel) mode the conducted power at 4 different bit rates was measured. They correspond with the used spreading factors as follows:

Bit rate	***12.2 kbit/s***	***64 kbit/s***	***144 kbit/s***	***384 kbit/s***
Spreading factor (SF)	64	16	8	4

In RMC mode only DPCCH and DPDCH are active. As bit rate changes do not influence the relative power of any code channel the measured RMS output power remains on the same level which is set to maximum by TPC (Transmit power control) pattern type 'All 1'.

b) HSDPA

HSDPA adds the HS-DPCCH in uplink as a control channel for high speed data transfer in downlink.
In HSDPA mode 4 sub-tests are defined by 3GPP 34.121 according to the following table:

Sub-test	β_c	β_d	β_d **(SF)**	β_c/β_d	β_{hs} (1)	**CM(dB)** (2)
1	2/15	15/15	64	2/15	4/15	0.0
2	12/15 (3)	15/15 (3)	64	12/15 (3)	24/15	1.0
3	15/15	8/15	64	15/8	30/15	1.5
4	15/15	4/15	64	15/4	30/15	1.5

Note 1: Δ_{ACK}, Δ_{NACK}, Δ_{CQI} = 8 $\Longleftrightarrow$ $A_{hs} = \beta_{hs}/\beta_c = 30/15 \Longleftrightarrow \beta_{hs} = 30/15 * \beta_c$
Note 2 : CM = 1 for β_c/β_d = 12/15, β_{hs}/β_c = 24/15
Note 3 : For subtest 2 the β_c/β_d ratio of 12/15 for the TFC during the measurement period (TF1, TF0) is achieved by setting the signalled gain factors for the reference TFC (TF1,TF1) to β_c = 11/15 and β_d = 15/15

Table 16: Sub-tests for UMTS Release 5 HSDPA

The β_c and β_d gain factors for DPCCH and DPDCH were set according to the values in the above table, β_{hs} for HS-DPCCH is set automatically to the correct value when Δ_{ACK}, Δ_{NACK}, Δ_{CQI} = 8. The variation of the β_c/β_d ratio causes a power reduction at sub-tests 2 - 4.
The measurements were performed with a Fixed Reference Channel (FRC) and H-Set 1 QPSK.

Parameter	***Value***
Nominal average inf. bit rate	534 kbit/s
Inter-TTI Distance	3 TTI's
Number of HARQ Processes	2 Processes
Information Bit Payload	3202 Bits
MAC-d PDU size	336 Bits
Number Code Blocks	1 Block
Binary Channel Bits Per TTI	4800 Bits
Total Available SMLs in UE	19200 SMLs
Number of SMLs per HARQ Process	9600 SMLs
Coding Rate	0.67
Number of Physical Channel Codes	5

Table 17: settings of required H-Set 1 QPSK acc. to 3GPP 34.121

c) DC-HSDPA (3GPP Release 8)

Dual Cell – HSDPA has been signalized using the following settings for connection setup:

Parameter During Connection Setup	Value
P-CPICH_Ec/Ior	-10 dB
P-CCPCH	-12
SCH_Ec/Ior	-12
PICH_Ec/Ior	-15
HS-PDSCH	off
HS-SCCH_1	off
DPCH_Ec/Ior	-5
OCNS_Ec/Ior	-3.1

Table 18: Downlink Physical Channels according to 3GPP 34.121 Table E.5.0

The fixed reference channel has been set to H-set 12 according to 3GPP TS 34.121 Table C.8.1.12:

Parameter	Unit	Value
Nominal Average Inf. Bit Rate	kbit/s	60
Inter-TTI Distance	TTI's	1
Information Bit Payload (N_{INF})	Bits	120
Number Code Blocks	Blocks	1
Binary Channel Bits Per TTI	Bits	960
Total Available SML's in UE	SML's	19200
Number of SML's per HARQ Process	SML's	3200
Coding Rate		0.15
Number of Physical Channel Codecs	Codecs	1
Modulation		QPSK
Note 1: The RMC is intended to be used for DC-HSDPA mode and both cells shall transmit with identical parameters as listed in the table. Note 2: Maximum number of transmission is limited to 1, i.e., retransmission is not allowed. The redundancy and constellation version 0 shall be used.		

Table 19: H-Set 12 QPSK configuration

The same Sub-test settings as for Release 5 HSDPA were used for the tests.

d) HSUPA

In HSUPA mode additional code channels (E-DPCCH, E-DPDCHn) are added for data transfer in uplink at higher bit rates.

5 sub-tests are defined by 3GPP 34.121 according to the following table :

Sub-test	β_c	β_d	β_d (SF)	β_c/β_d	β_{hs} (1)	β_{ec}	β_{ed}	β_{ec} (SF)	β_{ed} (code)	CM (2) (dB)	MPR (dB)	AG (4) Index	E-TFCI
1	11/15 (3)	15/15 (3)	64	11/15 (3)	22/15	209/225	1039/225	4	1	1.0	0.0	20	75
2	6/15	15/15	64	6/15	12/15	12/15	94/75	4	1	3.0	2.0	12	67
3	15/15	9/15	64	15/9	30/15	30/15	β_{ed1}:47/15 β_{ed2}:47/15	4	2	2.0	1.0	15	92
4	2/15	15/15	64	2/15	4/15	2/15	56/75	4	1	3.0	2.0	17	71
5	15/15 (4)	15/15 (4)	64	15/15 (4)	30/15	24/15	134/15	4	1	1.0	0.0	21	81

Note 1: Δ_{ACK}, Δ_{NACK}, Δ_{CQI} = 8 $\Longleftrightarrow$ $A_{hs} = \beta_{hs}/\beta_c$ = 30/15 $\Longleftrightarrow$ β_{hs} = 30/15 * β_c
Note 2 : CM = 1 for β_c/β_d = 12/15, β_{hs}/β_c = 24/15. For all other combinations of DPDCH, DPCCH, HS-DPCCH, E-DPDCH and E-DPCCH the MPR is based on the relative CM difference
Note 3 : For subtest 1 the β_c/β_d ratio of 11/15 for the TFC during the measurement period (TF1, TF0) is achieved by setting the signalled gain factors for the reference TFC (TF1,TF1) to β_c = 10/15 and β_d = 15/15
Note 4 : For subtest 5 the β_c/β_d ratio of 15/15 for the TFC during the measurement period (TF1, TF0) is achieved by setting the signalled gain factors for the reference TFC (TF1,TF1) to β_c = 14/15 and β_d = 15/15
Note 5 : Testing UE using E-DPDCH Physical Layer category 1 Sub-test 3 is not required according to TS 25.306 Table 5.1g
Note 6 : β_{ed} can not be set directly; it is set by Absolute Grant Value

Table 20: Subtests for UMTS Release 6 HSUPA

To achieve the settings above some additional procedures were defined by 3GPP 34.121. Those have been included in an application note for the CMU200 and were exactly followed :

- Test mode connection (BS signal tab) :
RMC 12.2 kbit/s + HSPA 34.108 with loop mode 1
- HS-DSCH settings (BS signal tab):
- FRC with H-set 1 QPSK
- ACK-NACK repetition factor = 3
- CQI feedback cycle = 4ms
- CQI repetition factor = 2
- HSUPA-specific signalling settings (UE signal tab) :
- E-TFCI table index = 0
- E-DCH minimum set E-TFCI = 9
- Puncturing limit non-max = 0.84
- max. number of channelisation codes = 2x SF4
- Initial Serving Grant Value = Off
- HSDPA and HSUPA Gain factors (UE signal tab)

Sub-test	β_c	β_d	Δ_{ACK}, Δ_{NACK}, Δ_{CQI}	ΔE–DPCCH)*
1	10	15	8	6
2	6	15	8	8
3	15	9	8	8
4	2	15	8	5
5	14	15	8	7

)* : β_{ec} and β_{ed} ratios (relative to β_c and β_d) are set by ΔE–DPCCH

- HSUPA Reference E-TFCIs (UE signal tab > HSUPA gain factors) :

Sub-test	**1, 2, 4, 5**				
Number of E-TFCIs	5				
Reference E-TFCI	11	67	71	75	81
Reference E-TFCI power offset	4	18	23	26	27

Sub-test	**3**	
Number of E-TFCIs	2	
Reference E-TFCI	11	92
Reference E-TFCI power offset	4	18

- HSUPA-specific generator parameters (BS Signal tab > HSUPA > E-AGCH > AG Pattern)

Sub-test	***Absolute Grant Value (AG Index)***
1	20
2	12
3	15
4	17
5	21

- Power Level settings (BS Signal tab > Node B-settings):
- Level reference : Output Channel Power (Ior)
- Output Channel Power (Ior) : -86 dBm

- Downlink Physical Channel Settings (BS signal tab)
- P-CPICH : -10 dB
- S-CPICH : Off
- P-SCH : -15 dB
- S-SCH : -15 dB
- P-CCPCH : -12 dB
- S-CCPCH : -12 dB
- PICH : -15 dB
- AICH : -12 dB
- DPDCH : -10 dB
- HS-SCCH : -8 dB
- HS-PDSCH : -3 dB
- E-AGCH : -20 dB
- E-RGCH/E-HICH - 20 dB
- E-RGCH Active : Off

The settings above were stored once for each sub-test and recalled before the measurement.

HSUPA test procedure :

To reach maximum output power in HSUPA mode the following procedures were followed:

3 different TPC patterns were defined :
Set 1 : Closed loop with target power 10 dBm
Set 2 : Single Pattern+Alternating with binary pattern '11111' for 1 dB steps 'up'
Set 3 : Single Pattern+Alternating with binary pattern '00000' for 1 dB steps 'down'

After recalling a certain HSUPA sub-test the HSUPA E-AGCH graph with E-TFCI event counter is displayed. After starting with the closed loop command the power is increased in 1 dB steps by activating pattern set 2 until the UE decreases the transmitted E-TFCI.
At this point set 3 is activated once to reduce the output power to the value at which the original E-TFCI, which is required for the sub-test, appears again.

For conducted power measurements the same steps are repeated in the power menu to read out the corresponding maximum RMS output power with the target E-TFCI.
For SAR measurements it is useful to switch to Code Domain Power vs. Time display.
Here the CMU200 shows relative power values (max. and min.) of each code channel which should roughly correspond to the numerators of the gain factors e.g. :

Sub-test	β_c	β_d	β_{hs}	β_{ec}	β_{ed}
5	15	15	30	24	134

By this way a surveillance of signalling conditions is possible to make sure that HSUPA code channels are active during the complete SAR measurement.

8.2.7 Conducted average power measurements CDMA

Band	Channel	Frequency (MHz)	Average power (dBm)							
			RC1/1, SO55		RC3/3, SO55		SO32, SCH0 disabled		SO32, SCH0 enabled	
			Full	Back Off	Full	Back Off	Full	Back Off	Full	Back Off
BC0	1013	824.70	23.8	19.5	23.7	19.5	23.8	19.5	23.8	19.5
	384	836.60	23.9	19.4	23.9	19.4	23.9	19.3	23.9	19.3
	777	848.31	24.0	19.4	24.0	19.4	24.0	19.4	24.0	19.4
BC1	25	1851.25	23.7	13.4	23.9	13.6	23.9	13.5	23.6	13.2
	600	1880.00	24.2	13.5	24.2	13.5	24.2	13.5	24.2	13.5
	1175	1908.75	24.0	12.5	24.0	12.5	24.0	12.8	24.0	12.7

Table 21: Test results conducted average power measurement **CDMA**

Band	Channel	Frequency (MHz)	Average power (dBm)			
			Rev 0		Rev A	
			Full	Back Off	Full	Back Off
BC0	1013	824.70	23.7	19.4	23.8	19.5
	384	836.60	23.7	19.3	23.8	19.4
	777	848.31	23.9	19.1	24.0	19.3
BC1	25	1851.25	23.9	13.4	23.9	13.5
	600	1880.00	24.2	13.4	24.2	13.5
	1175	1908.75	24.0	12.5	23.9	12.6

Table 22: Test results conducted average power measurement **EVDO CDMA**

8.2.8 Conducted power measurements LTE FDD 2 1900 MHz

Bandwidth (MHz)	Channel / Frequency (MHz)	Resource block allocation	MPR 3GPP (dB)	P_{avg} (dBm)	P_{avg} (dBm) back off	dev. dB	MPR 3GPP (dB)	P_{avg} (dBm)	P_{avg} (dBm) back off	dev. dB
			QPSK	QPSK	QPSK		16-QAM	16-QAM	16-QAM	
1.4	18607 / 1850.7	1 RB low	0	22.5	13.4	9.1	0-1	21.7	13.4	8.3
		1 RB mid	0	22.5	13.5	9.0	0-1	21.7	13.4	8.3
		1 RB high	0	22.5	13.2	9.3	0-1	21.7	13.2	8.5
		50% RB	0	22.5	13.4	9.1	0-1	21.4	13.3	8.1
		50% RB	0	22.5	13.4	9.1	0-1	21.4	13.2	8.2
		50% RB	0	22.6	13.3	9.3	0-1	21.4	13.2	8.2
		100% RB	0-1	21.4	13.3	8.1	0-2	20.4	12.9	7.5
	18900 / 1880.0	1 RB low	0	22.6	13.0	9.6	0-1	21.4	12.9	8.5
		1 RB mid	0	22.5	13.2	9.3	0-1	21.3	13.1	8.2
		1 RB high	0	22.6	13.1	9.5	0-1	21.4	13.0	8.4
		50% RB	0	22.5	13.2	9.3	0-1	21.7	13.2	8.5
		50% RB	0	22.5	13.2	9.3	0-1	21.6	13.2	8.4
		50% RB	0	22.5	13.2	9.3	0-1	21.7	13.2	8.5
		100% RB	0-1	21.6	13.1	8.5	0-2	20.7	13.2	7.5
	19193 / 1909.3	1 RB low	0	22.3	12.8	9.5	0-1	21.7	13.1	8.6
		1 RB mid	0	22.2	12.8	9.4	0-1	21.7	13.1	8.6
		1 RB high	0	22.3	12.6	9.7	0-1	21.7	12.9	8.8
		50% RB	0	22.4	12.8	9.6	0-1	21.5	13.0	8.5
		50% RB	0	22.4	12.8	9.6	0-1	21.5	13.0	8.5
		50% RB	0	22.4	12.8	9.6	0-1	21.6	13.0	8.6
		100% RB	0-1	21.6	12.8	8.8	0-2	20.6	13.1	7.5
3.0	18615 / 1851.5	1 RB low	0	22.5	13.5	9.0	0-1	21.6	13.6	8.0
		1 RB mid	0	22.5	13.4	9.1	0-1	21.6	13.4	8.2
		1 RB high	0	22.6	13.3	9.3	0-1	21.6	13.3	8.3
		50% RB	0-1	21.4	13.3	8.1	0-2	20.3	12.9	7.4
		50% RB	0-1	21.4	13.3	8.1	0-2	20.3	12.9	7.4
		50% RB	0-1	21.5	13.3	8.2	0-2	20.3	12.8	7.5
		100% RB	0-1	21.4	13.3	8.1	0-2	20.5	13.0	7.5
	18900 / 1880.0	1 RB low	0	22.6	13.1	9.5	0-1	21.4	13.1	8.3
		1 RB mid	0	22.5	13.2	9.3	0-1	21.2	13.1	8.1
		1 RB high	0	22.5	13.2	9.3	0-1	21.3	13.1	8.2
		50% RB	0-1	21.5	13.1	8.4	0-2	20.6	13.1	7.5
		50% RB	0-1	21.5	13.2	8.3	0-2	20.6	13.2	7.4
		50% RB	0-1	21.5	13.2	8.3	0-2	20.6	13.2	7.4
		100% RB	0-1	21.5	13.1	8.4	0-2	20.4	12.9	7.5
	19185 / 1908.5	1 RB low	0	22.6	13.3	9.3	0-1	21.3	13.5	7.8
		1 RB mid	0	22.6	13.0	9.6	0-1	21.3	13.1	8.2
		1 RB high	0	22.7	12.8	9.9	0-1	21.4	13.0	8.4
		50% RB	0-1	21.5	13.1	8.4	0-2	20.5	13.3	7.2
		50% RB	0-1	21.5	13.0	8.5	0-2	20.5	13.2	7.3
		50% RB	0-1	21.6	12.8	8.8	0-2	20.6	13.0	7.6
		100% RB	0-1	21.6	13.0	8.6	0-2	20.5	13.1	7.4

5.0	18625 / 1852.5	1 RB low	0	22.5	13.5	9.0	0-1	21.5	13.4	8.1
		1 RB mid	0	22.5	13.2	9.3	0-1	21.4	13.2	8.2
		1 RB high	0	22.6	13.1	9.5	0-1	21.5	13.1	8.4
		50% RB	0-1	21.5	13.3	8.2	0-2	20.5	13.1	7.4
		50% RB	0-1	21.4	13.2	8.2	0-2	20.5	13.0	7.5
		50% RB	0-1	21.5	13.2	8.3	0-2	20.6	12.9	7.7
		100% RB	0-1	21.5	13.3	8.2	0-2	20.5	13.0	7.5
	18900 / 1880.0	1 RB low	0	22.5	12.9	9.6	0-1	21.8	13.6	8.2
		1 RB mid	0	22.5	13.1	9.4	0-1	21.8	13.8	8.0
		1 RB high	0	22.5	13.1	9.4	0-1	21.9	13.8	8.1
		50% RB	0-1	21.5	13.1	8.4	0-2	20.5	13.0	7.5
		50% RB	0-1	21.4	13.2	8.2	0-2	20.5	13.1	7.4
		50% RB	0-1	21.5	13.1	8.4	0-2	20.5	13.0	7.5
		100% RB	0-1	21.4	13.1	8.3	0-2	20.5	12.8	7.7
	19175 / 1907.5	1 RB low	0	22.6	13.3	9.3	0-1	21.4	13.4	8.0
		1 RB mid	0	22.5	13.2	9.3	0-1	21.2	13.4	7.8
		1 RB high	0	22.6	12.8	9.8	0-1	21.4	13.1	8.3
		50% RB	0-1	21.5	13.3	8.2	0-2	20.5	13.4	7.1
		50% RB	0-1	21.5	13.2	8.3	0-2	20.5	13.3	7.2
		50% RB	0-1	21.6	13.0	8.6	0-2	20.6	13.1	7.5
		100% RB	0-1	21.5	13.2	8.3	0-2	20.6	13.4	7.2
10.0	18650 / 1855	1 RB low	0	22.5	13.5	9.0	0-1	21.6	13.6	8.0
		1 RB mid	0	22.5	13.1	9.4	0-1	21.6	13.1	8.5
		1 RB high	0	22.5	**13.5**	9.0	0-1	21.7	13.6	8.1
		50% RB	0-1	21.5	13.3	8.2	0-2	20.5	13.0	7.5
		50% RB	0-1	21.5	13.0	8.5	0-2	20.6	12.8	7.8
		50% RB	0-1	21.4	13.1	8.3	0-2	20.5	13.1	7.4
		100% RB	0-1	21.5	13.2	8.3	0-2	20.5	12.9	7.6
	18900 / 1880	1 RB low	0	22.5	12.9	9.6	0-1	21.3	12.8	8.5
		1 RB mid	0	22.5	13.1	9.4	0-1	21.3	13.1	8.2
		1 RB high	0	22.5	13.2	9.3	0-1	21.3	13.1	8.2
		50% RB	0-1	21.5	13.0	8.5	0-2	20.6	12.9	7.7
		50% RB	0-1	21.5	13.0	8.5	0-2	20.6	13.0	7.6
		50% RB	0-1	21.5	13.2	8.3	0-2	20.6	13.1	7.5
		100% RB	0-1	21.5	13.1	8.4	0-2	20.5	13.0	7.5
	19150 / 1905	1 RB low	0	22.6	13.1	9.5	0-1	21.2	13.1	8.1
		1 RB mid	0	22.7	13.2	9.5	0-1	21.3	13.4	7.9
		1 RB high	0	22.7	13.1	9.6	0-1	21.4	13.2	8.2
		50% RB	0-1	21.5	13.1	8.4	0-2	20.5	13.2	7.3
		50% RB	0-1	21.5	13.1	8.4	0-2	20.5	13.2	7.3
		50% RB	0-1	21.6	13.2	8.4	0-2	20.5	13.3	7.2
		100% RB	0-1	21.5	13.1	8.4	0-2	20.6	13.2	7.4

15.0	18675 / 1857.5	1 RB low	0	22.5	13.4	9.1	0-1	21.6	13.1	8.5
		1 RB mid	0	22.5	13.3	9.2	0-1	21.6	13.5	8.1
		1 RB high	0	22.5	13.0	9.5	0-1	21.7	13.2	8.5
		50% RB	0-1	21.5	13.1	8.4	0-2	20.6	12.8	7.8
		50% RB	0-1	21.4	13.2	8.2	0-2	20.5	13.1	7.4
		50% RB	0-1	21.5	13.2	8.3	0-2	20.6	13.1	7.5
		100% RB	0-1	21.5	13.0	8.5	0-2	20.5	13.0	7.5
	18900 / 1880.0	1 RB low	0	22.5	12.7	9.8	0-1	21.9	13.0	8.9
		1 RB mid	0	22.5	13.2	9.3	0-1	21.8	13.5	8.3
		1 RB high	0	22.4	13.0	9.4	0-1	21.8	13.2	8.6
		50% RB	0-1	21.4	12.8	8.6	0-2	20.4	12.6	7.8
		50% RB	0-1	21.4	13.0	8.4	0-2	20.5	12.9	7.6
		50% RB	0-1	21.4	13.1	8.3	0-2	20.4	12.9	7.5
		100% RB	0-1	21.5	12.9	8.6	0-2	20.4	12.8	7.6
	19125 / 1902.5	1 RB low	0	22.5	12.6	9.9	0-1	21.2	12.7	8.5
		1 RB mid	0	22.5	13.0	9.5	0-1	21.2	13.0	8.2
		1 RB high	0	22.6	12.9	9.7	0-1	21.3	13.0	8.3
		50% RB	0-1	21.5	13.1	8.4	0-2	20.5	13.2	7.3
		50% RB	0-1	21.5	13.5	8.0	0-2	20.5	13.5	7.0
		50% RB	0-1	21.5	13.4	8.1	0-2	20.5	13.7	6.8
		100% RB	0-1	21.5	13.3	8.2	0-2	20.5	13.4	7.1
20.0	18700 / 1860	1 RB low	0	22.4	12.8	9.6	0-1	21.5	12.3	9.2
		1 RB mid	0	22.5	**13.3**	9.2	0-1	21.5	13.2	8.3
		1 RB high	0	**22.5**	12.4	10.1	0-1	21.5	12.3	9.2
		50% RB	0-1	21.4	12.9	8.5	0-2	20.4	12.2	8.2
		50% RB	0-1	21.4	**13.1**	8.3	0-2	20.5	12.5	8.0
		50% RB	0-1	21.4	12.7	8.7	0-2	20.5	12.1	8.4
		100% RB	0-1	21.4	12.8	8.6	0-2	20.5	12.3	8.2
	18900 / 1880	1 RB low	0	22.5	12.2	10.3	0-1	21.7	12.1	9.6
		1 RB mid	0	**22.5**	13.2	9.3	0-1	21.6	13.0	8.6
		1 RB high	0	22.5	12.9	9.6	0-1	21.6	12.5	9.1
		50% RB	0-1	21.4	12.7	8.7	0-2	20.4	12.0	8.4
		50% RB	0-1	21.4	13.0	8.4	0-2	20.4	12.4	8.0
		50% RB	0-1	21.5	12.9	8.6	0-2	20.4	12.3	8.1
		100% RB	0-1	21.4	12.7	8.7	0-2	20.5	12.1	8.4
	19100 / 1900	1 RB low	0	22.4	12.7	9.7	0-1	21.5	12.4	9.1
		1 RB mid	0	22.4	13.0	9.4	0-1	21.5	12.9	8.6
		1 RB high	0	**22.5**	12.6	9.9	0-1	21.6	12.7	8.9
		50% RB	0-1	21.5	12.4	9.1	0-2	20.5	12.0	8.5
		50% RB	0-1	21.5	12.9	8.6	0-2	20.5	12.4	8.1
		50% RB	0-1	21.5	12.9	8.6	0-2	20.6	12.5	8.1
		100% RB	0-1	21.5	12.7	8.8	0-2	20.5	12.2	8.3

Table 23: Test results conducted power measurement LTE FDD 2 1900 MHz.

8.2.9 Conducted power measurements LTE FDD 4 1700 MHz

Bandwidth (MHz)	Channel / Frequency (MHz)	Resource block allocation	MPR 3GPP (dB)	P_{avg} (dBm)	P_{avg} (dBm) back off	dev. dB	MPR 3GPP (dB)	P_{avg} (dBm)	P_{avg} (dBm) back off	dev. dB
			QPSK	QPSK	QPSK		16-QAM	16-QAM	16-QAM	
1.4	19957 / 1710.7	1 RB low	0	22.5	13.1	9.4	0-1	21.8	13.5	8.3
		1 RB mid	0	22.5	13.2	9.3	0-1	21.7	13.5	8.2
		1 RB high	0	22.5	12.9	9.6	0-1	21.8	13.3	8.5
		50% RB low	0	22.6	13.1	9.5	0-1	21.5	13.3	8.2
		50% RB	0	22.6	13.1	9.5	0-1	21.5	13.3	8.2
		50% RB	0	22.6	13.0	9.6	0-1	21.5	13.2	8.3
		100% RB	0-1	21.5	13.1	8.4	0-2	20.3	13.0	7.3
	20175 / 1732.5	1 RB low	0	22.6	12.8	9.8	0-1	21.4	12.7	8.7
		1 RB mid	0	22.6	13.1	9.5	0-1	21.4	13.0	8.4
		1 RB high	0	22.6	12.9	9.7	0-1	21.5	12.8	8.7
		50% RB low	0	22.6	13.0	9.6	0-1	21.7	13.0	8.7
		50% RB	0	22.5	13.1	9.4	0-1	21.7	13.1	8.6
		50% RB	0	22.6	13.0	9.6	0-1	21.7	13.1	8.6
		100% RB	0-1	21.5	13.0	8.5	0-2	20.7	13.1	7.6
	20393 / 1754.3	1 RB low	0	22.6	13.0	9.6	0-1	21.6	13.1	8.5
		1 RB mid	0	22.5	13.1	9.4	0-1	21.6	13.3	8.3
		1 RB high	0	22.6	13.1	9.5	0-1	21.7	13.3	8.4
		50% RB low	0	22.6	13.0	9.6	0-1	21.5	13.1	8.4
		50% RB	0	22.6	13.1	9.5	0-1	21.5	13.2	8.3
		50% RB	0	22.6	13.2	9.4	0-1	21.5	13.3	8.2
		100% RB	0-1	21.6	13.1	8.5	0-2	20.6	13.2	7.4
3.0	19965 / 1711.5	1 RB low	0	22.6	13.4	9.2	0-1	21.7	13.8	7.9
		1 RB mid	0	22.4	13.0	9.4	0-1	21.6	13.4	8.2
		1 RB high	0	22.5	12.8	9.7	0-1	21.6	13.3	8.3
		50% RB low	0-1	21.5	13.0	8.5	0-2	20.3	13.0	7.3
		50% RB	0-1	21.3	12.9	8.4	0-2	20.2	12.9	7.3
		50% RB	0-1	21.4	12.8	8.6	0-2	20.2	12.8	7.4
		100% RB	0-1	21.4	12.9	8.5	0-2	20.5	12.9	7.6
	20175 / 1732.5	1 RB low	0	22.6	13.0	9.6	0-1	21.4	12.9	8.5
		1 RB mid	0	22.6	13.1	9.5	0-1	21.4	13.0	8.4
		1 RB high	0	22.6	13.0	9.6	0-1	21.4	13.0	8.4
		50% RB low	0-1	21.6	12.9	8.7	0-2	20.6	13.0	7.6
		50% RB	0-1	21.6	13.1	8.5	0-2	20.6	13.2	7.4
		50% RB	0-1	21.5	13.0	8.5	0-2	20.6	13.0	7.6
		100% RB	0-1	21.5	13.0	8.5	0-2	20.5	12.8	7.7
	20385 / 1753.5	1 RB low	0	22.7	12.8	9.9	0-1	21.3	12.8	8.5
		1 RB mid	0	22.6	13.0	9.6	0-1	21.3	13.1	8.2
		1 RB high	0	22.7	13.3	9.4	0-1	21.4	13.2	8.2
		50% RB low	0-1	21.6	12.8	8.8	0-2	20.6	13.0	7.6
		50% RB	0-1	21.5	12.9	8.6	0-2	20.5	13.1	7.4
		50% RB	0-1	21.5	13.1	8.4	0-2	20.5	13.2	7.3
		100% RB	0-1	21.5	13.0	8.5	0-2	20.6	13.1	7.5

5.0	19975 / 1712.5	1 RB low	0	22.6	13.1	9.5	0-1	21.5	13.6	7.9
		1 RB mid	0	22.4	12.9	9.5	0-1	21.4	13.3	8.1
		1 RB high	0	22.6	12.7	9.9	0-1	21.4	13.2	8.2
		50% RB	0-1	21.4	13.1	8.3	0-1	20.4	13.2	7.2
		50% RB	0-1	21.3	12.9	8.4	0-1	20.4	13.0	7.4
		50% RB	0-1	21.4	12.7	8.7	0-1	20.5	13.0	7.5
		100% RB	0-1	21.4	12.9	8.5	0-2	20.4	12.9	7.5
	20175 / 1732.5	1 RB low	0	22.5	12.9	9.6	0-1	21.8	13.6	8.2
		1 RB mid	0	22.5	13.0	9.5	0-1	21.9	13.7	8.2
		1 RB high	0	22.6	13.0	9.6	0-1	21.9	13.7	8.2
		50% RB	0-1	21.5	12.9	8.6	0-1	20.5	12.8	7.7
		50% RB	0-1	21.5	13.1	8.4	0-1	20.6	13.0	7.6
		50% RB	0-1	21.5	13.0	8.5	0-1	20.6	13.0	7.6
		100% RB	0-1	21.5	13.0	8.5	0-2	20.5	12.8	7.7
	20375 / 1752.5	1 RB low	0	22.6	12.8	9.8	0-1	21.3	12.8	8.5
		1 RB mid	0	22.6	12.8	9.8	0-1	21.2	12.9	8.3
		1 RB high	0	22.6	13.2	9.4	0-1	21.3	13.2	8.1
		50% RB	0-1	21.5	12.8	8.7	0-1	20.6	12.8	7.8
		50% RB	0-1	21.5	12.7	8.8	0-1	20.5	12.8	7.7
		50% RB	0-1	21.6	13.0	8.6	0-1	20.6	13.1	7.5
		100% RB	0-1	21.5	12.8	8.7	0-2	20.6	12.9	7.7
10.0	20000 / 1715.0	1 RB low	0	22.6	13.3	9.3	0-1	21.7	13.8	7.9
		1 RB mid	0	22.6	12.9	9.7	0-1	21.5	13.3	8.2
		1 RB high	0	22.5	13.1	9.4	0-1	21.7	13.4	8.3
		50% RB	0-1	21.4	13.0	8.4	0-2	20.4	13.0	7.4
		50% RB	0-1	21.4	12.8	8.6	0-2	20.4	12.9	7.5
		50% RB	0-1	21.4	12.9	8.5	0-2	20.4	12.9	7.5
		100% RB	0-1	21.3	12.8	8.5	0-2	20.4	12.8	7.6
	20175 / 1732.5	1 RB low	0	22.7	13.2	9.5	0-1	21.4	13.1	8.3
		1 RB mid	0	22.6	13.0	9.6	0-1	21.3	13.0	8.3
		1 RB high	0	22.6	13.2	9.4	0-1	21.4	13.3	8.1
		50% RB	0-1	21.5	13.1	8.4	0-2	20.6	13.0	7.6
		50% RB	0-1	21.5	13.0	8.5	0-2	20.7	13.0	7.7
		50% RB	0-1	21.5	13.1	8.4	0-2	20.7	13.0	7.7
		100% RB	0-1	21.6	13.1	8.5	0-2	20.5	13.0	7.5
	20350 / 1750.0	1 RB low	0	22.6	12.8	9.8	0-1	21.2	12.9	8.3
		1 RB mid	0	22.6	12.7	9.9	0-1	21.2	12.8	8.4
		1 RB high	0	22.6	13.2	9.4	0-1	21.3	13.2	8.1
		50% RB	0-1	21.5	12.7	8.8	0-2	20.5	12.8	7.7
		50% RB	0-1	21.5	12.7	8.8	0-2	20.4	12.8	7.6
		50% RB	0-1	21.5	12.9	8.6	0-2	20.5	12.9	7.6
		100% RB	0-1	21.5	12.9	8.6	0-2	20.5	12.9	7.6

15.0	20025 / 1717.5	1 RB low	0	22.6	13.1	9.5	0-1	21.7	13.6	8.1
		1 RB mid	0	22.5	12.8	9.7	0-1	21.6	13.2	8.4
		1 RB high	0	22.6	12.9	9.7	0-1	21.7	13.2	8.5
		50% RB	0-1	21.4	12.7	8.7	0-1	20.5	12.9	7.6
		50% RB	0-1	21.4	12.8	8.6	0-1	20.5	12.9	7.6
		50% RB	0-1	21.4	13.1	8.3	0-1	20.5	13.2	7.3
		100% RB	0-1	21.5	12.9	8.6	0-2	20.5	13.0	7.5
	20175 / 1732.5	1 RB low	0	22.6	12.9	9.7	0-1	22.0	13.2	8.8
		1 RB mid	0	22.5	13.0	9.5	0-1	21.9	13.3	8.6
		1 RB high	0	22.5	12.9	9.6	0-1	21.9	13.4	8.5
		50% RB	0-1	21.5	12.9	8.6	0-1	20.5	12.8	7.7
		50% RB	0-1	21.5	13.0	8.5	0-1	20.5	12.8	7.7
		50% RB	0-1	21.5	13.0	8.5	0-1	20.5	12.9	7.6
		100% RB	0-1	21.6	13.0	8.6	0-2	20.6	12.9	7.7
	20325 / 1747.5	1 RB low	0	22.5	13.0	9.5	0-1	21.2	13.0	8.2
		1 RB mid	0	22.6	12.7	9.9	0-1	21.2	12.8	8.4
		1 RB high	0	22.6	12.9	9.7	0-1	21.3	12.9	8.4
		50% RB	0-1	21.5	13.2	8.3	0-1	20.4	13.3	7.1
		50% RB	0-1	21.5	13.0	8.5	0-1	20.4	13.1	7.3
		50% RB	0-1	21.5	13.0	8.5	0-1	20.5	13.0	7.5
		100% RB	0-1	21.6	13.0	8.6	0-2	20.5	13.0	7.5
20.0	20050 / 1720.0	1 RB low	0	22.5	12.9	9.6	0-1	21.6	13.2	8.4
		1 RB mid	0	22.5	**13.4**	9.1	0-1	21.6	13.5	8.1
		1 RB high	0	**22.7**	12.9	9.8	0-1	21.7	12.8	8.9
		50% RB	0-1	21.4	12.9	8.5	0-2	20.4	12.5	7.9
		50% RB	0-1	21.4	**13.4**	8.0	0-2	20.5	13.0	7.5
		50% RB	0-1	**21.5**	13.1	8.4	0-2	20.6	12.6	8.0
		100% RB	0-1	21.5	13.0	8.5	0-2	20.5	12.5	8.0
	20175 / 1732.5	1 RB low	0	22.4	12.9	9.5	0-1	21.8	12.9	8.9
		1 RB mid	0	22.4	**13.5**	8.9	0-1	21.7	13.3	8.4
		1 RB high	0	22.4	13.0	9.4	0-1	21.6	12.9	8.7
		50% RB	0-1	21.5	13.1	8.4	0-2	20.5	12.5	8.0
		50% RB	0-1	21.5	**13.4**	8.1	0-2	20.6	12.8	7.8
		50% RB	0-1	**21.5**	13.2	8.3	0-2	20.5	12.6	7.9
		100% RB	0-1	21.5	13.2	8.3	0-2	20.5	12.6	7.9
	20300 / 1745.0	1 RB low	0	22.5	13.1	9.4	0-1	21.7	12.9	8.8
		1 RB mid	0	22.4	**13.4**	9.0	0-1	21.6	13.4	8.2
		1 RB high	0	22.5	12.9	9.6	0-1	21.6	13.0	8.6
		50% RB	0-1	21.5	13.2	8.3	0-2	20.5	12.8	7.7
		50% RB	0-1	21.5	**13.3**	8.2	0-2	20.5	12.9	7.6
		50% RB	0-1	**21.5**	13.0	8.5	0-2	20.5	12.6	7.9
		100% RB	0-1	21.5	13.1	8.4	0-2	20.5	12.6	7.9

Table 24: Test results conducted power measurement LTE FDD 4 1700 MHz.

8.2.10 Conducted power measurements LTE FDD 7 2600 MHz

Bandwidth (MHz)	Channel / Frequency (MHz)	Resource block allocation	MPR 3GPP (dB)	P_{avg} (dBm)	P_{avg} (dBm) back off	dev. dB	MPR 3GPP (dB)	P_{avg} (dBm)	P_{avg} (dBm) back off	dev. dB
			QPSK	QPSK	QPSK		16-QAM	16-QAM	16-QAM	
5.0	20775 / 2502.5	1 RB low	0	22.8	15.5	7.3	0-1	21.8	15.5	6.3
		1 RB mid	0	22.7	15.7	7.0	0-1	21.7	15.6	6.1
		1 RB high	0	22.7	15.7	7.0	0-1	21.7	15.5	6.2
		50% RB low	0-1	21.8	15.6	6.2	0-1	20.8	15.5	5.3
		50% RB	0-1	21.8	15.6	6.2	0-1	20.8	15.6	5.2
		50% RB	0-1	21.7	15.6	6.1	0-1	20.7	15.7	5.0
		100% RB	0-1	21.8	15.6	6.2	0-2	20.7	15.5	5.2
	21100 / 2535	1 RB low	0	22.6	15.0	7.6	0-1	21.9	15.8	6.1
		1 RB mid	0	22.5	15.0	7.5	0-1	21.8	15.8	6.0
		1 RB high	0	22.6	15.0	7.6	0-1	21.9	15.7	6.2
		50% RB low	0-1	21.5	15.2	6.3	0-1	20.5	15.3	5.2
		50% RB	0-1	21.5	15.2	6.3	0-1	20.5	15.3	5.2
		50% RB	0-1	21.6	15.1	6.5	0-1	20.6	15.3	5.3
		100% RB	0-1	21.5	15.2	6.3	0-2	20.5	15.2	5.3
	21425 / 2567.5	1 RB low	0	22.6	15.8	6.8	0-1	21.4	15.8	5.6
		1 RB mid	0	22.5	15.6	6.9	0-1	21.2	15.6	5.6
		1 RB high	0	22.4	15.2	7.2	0-1	21.2	15.3	5.9
		50% RB low	0-1	21.6	**15.9**	5.7	0-1	20.6	16.0	4.6
		50% RB	0-1	21.5	15.8	5.7	0-1	20.6	15.8	4.8
		50% RB	0-1	21.5	15.5	6.0	0-1	20.4	15.6	4.8
		100% RB	0-1	21.5	15.7	5.8	0-2	20.6	15.9	4.7
10.0	20800 / 2505	1 RB low	0	22.8	15.5	7.3	0-1	22.0	15.6	6.4
		1 RB mid	0	22.6	15.9	6.7	0-1	21.9	15.7	6.2
		1 RB high	0	22.6	15.8	6.8	0-1	21.8	15.8	6.0
		50% RB low	0-1	21.8	15.6	6.2	0-2	20.7	15.7	5.0
		50% RB	0-1	21.8	15.7	6.1	0-2	20.7	15.6	5.1
		50% RB	0-1	21.6	15.6	6.0	0-2	20.6	15.6	5.0
		100% RB	0-1	21.7	15.6	6.1	0-2	20.7	15.6	5.1
	21100 / 2535	1 RB low	0	22.6	15.4	7.2	0-1	21.3	15.4	5.9
		1 RB mid	0	22.6	15.1	7.5	0-1	21.3	15.2	6.1
		1 RB high	0	22.6	15.0	7.6	0-1	21.3	15.1	6.2
		50% RB low	0-1	21.5	15.4	6.1	0-2	20.6	15.6	5.0
		50% RB	0-1	21.5	15.3	6.2	0-2	20.5	15.4	5.1
		50% RB	0-1	21.6	15.2	6.4	0-2	20.7	15.4	5.3
		100% RB	0-1	21.5	15.2	6.3	0-2	20.5	15.4	5.1
	21400 / 2565	1 RB low	0	22.7	15.6	7.1	0-1	21.4	15.5	5.9
		1 RB mid	0	22.7	15.8	6.9	0-1	21.4	15.7	5.7
		1 RB high	0	22.5	15.4	7.1	0-1	21.2	15.6	5.6
		50% RB low	0-1	21.5	15.7	5.8	0-2	20.5	15.7	4.8
		50% RB	0-1	21.6	15.9	5.7	0-2	20.6	16.0	4.6
		50% RB	0-1	21.6	15.8	5.8	0-2	20.5	15.8	4.7
		100% RB	0-1	21.6	15.8	5.8	0-2	20.6	15.8	4.8

15.0	20825 / 2507.5	1 RB low	0	22.8	15.5	7.3	0-1	21.9	15.7	6.2
		1 RB mid	0	22.6	15.8	6.8	0-1	21.8	15.8	6.0
		1 RB high	0	22.6	15.8	6.8	0-1	21.7	16.0	5.7
		50% RB	0-1	21.7	15.5	6.2	0-1	20.8	15.7	5.1
		50% RB	0-1	21.7	15.6	6.1	0-1	20.6	15.6	5.0
		50% RB	0-1	21.6	15.7	5.9	0-1	20.6	15.7	4.9
		100% RB	0-1	21.6	15.6	6.0	0-2	20.7	15.7	5.0
	21100 / 2535	1 RB low	0	22.6	15.5	7.1	0-1	21.9	15.9	6.0
		1 RB mid	0	22.5	15.2	7.3	0-1	21.8	15.6	6.2
		1 RB high	0	22.5	15.0	7.5	0-1	21.9	15.3	6.6
		50% RB	0-1	21.5	15.3	6.2	0-1	20.5	15.4	5.1
		50% RB	0-1	21.5	15.3	6.2	0-1	20.5	15.4	5.1
		50% RB	0-1	21.6	15.2	6.4	0-1	20.6	15.2	5.4
		100% RB	0-1	21.6	15.2	6.4	0-2	20.5	15.3	5.2
	21375 / 2562.5	1 RB low	0	22.7	15.8	6.9	0-1	21.4	15.7	5.7
		1 RB mid	0	22.5	15.8	6.7	0-1	21.3	15.6	5.7
		1 RB high	0	22.5	15.5	7.0	0-1	21.3	15.6	5.7
		50% RB	0-1	21.7	15.9	5.8	0-1	20.7	15.8	4.9
		50% RB	0-1	21.7	15.8	5.9	0-1	20.6	15.7	4.9
		50% RB	0-1	21.6	16.1	5.5	0-1	20.6	16.1	4.5
		100% RB	0-1	21.7	15.9	5.8	0-2	20.5	15.9	4.6
20.0	20850 / 2510	1 RB low	0	**22.7**	15.7	7.0	0-1	21.8	15.6	6.2
		1 RB mid	0	22.6	**15.7**	6.9	0-1	21.6	15.7	5.9
		1 RB high	0	22.6	15.7	6.9	0-1	21.6	15.8	5.8
		50% RB	0-1	**21.8**	15.6	6.2	0-2	20.7	15.6	5.1
		50% RB	0-1	21.7	15.6	6.1	0-2	20.6	15.7	4.9
		50% RB	0-1	21.6	**15.8**	5.8	0-2	20.5	15.8	4.7
		100% RB	0-1	21.7	**15.9**	5.8	0-2	20.6	15.7	4.9
	21100 / 2535	1 RB low	0	22.4	15.0	7.4	0-1	21.6	15.4	6.2
		1 RB mid	0	**22.5**	**15.2**	7.3	0-1	21.6	15.6	6.0
		1 RB high	0	22.4	14.6	7.8	0-1	21.6	15.0	6.6
		50% RB	0-1	21.4	15.1	6.3	0-2	20.4	15.2	5.2
		50% RB	0-1	21.5	**15.2**	6.3	0-2	20.5	15.3	5.2
		50% RB	0-1	**21.6**	14.9	6.7	0-2	20.6	15.0	5.6
		100% RB	0-1	21.4	15.0	6.4	0-2	20.5	15.1	5.4
	21350 / 2560	1 RB low	0	22.4	15.1	7.3	0-1	21.7	15.5	6.2
		1 RB mid	0	**22.5**	**15.7**	6.8	0-1	21.7	16.1	5.6
		1 RB high	0	22.4	15.1	7.3	0-1	21.7	15.8	5.9
		50% RB	0-1	21.6	15.5	6.1	0-2	20.6	15.5	5.1
		50% RB	0-1	21.6	**15.7**	5.9	0-2	20.7	15.7	5.0
		50% RB	0-1	**21.7**	15.6	6.1	0-2	20.7	15.7	5.0
		100% RB	0-1	21.6	15.6	6.0	0-2	20.7	15.6	5.1

Table 25: Test results conducted power measurement LTE FDD 7 2600 MHz.

8.2.11 Conducted power measurements LTE FDD 13 700 MHz

Bandwidth (MHz)	Channel / Frequency (MHz)	Resource block allocation	MPR 3GPP (dB)	P_{avg} (dBm)	P_{avg} (dBm) back off	dev. dB	MPR 3GPP (dB)	P_{avg} (dBm)	P_{avg} (dBm) back off	dev. dB
			QPSK	QPSK	QPSK		16-QAM	16-QAM	16-QAM	
5.0	23205 / 779.5	1 RB low	0	22.7	19.1	3.6	0-1	21.7	19.0	2.7
		1 RB mid	0	22.5	19.0	3.5	0-1	21.4	18.9	2.5
		1 RB high	0	22.8	18.9	3.9	0-1	21.7	18.9	2.8
		50% RB low	0-1	21.5	19.0	2.5	0-1	20.6	19.2	1.4
		50% RB mid	0-1	21.4	19.0	2.4	0-1	20.5	19.1	1.4
		50% RB high	0-1	21.6	18.8	2.8	0-1	20.7	18.9	1.8
		100% RB	0-1	21.5	18.8	2.7	0-2	20.6	19.0	1.6
	23230 / 782	1 RB low	0	22.4	19.0	3.4	0-1	21.8	19.3	2.5
		1 RB mid	0	22.7	18.8	3.9	0-1	22.0	19.2	2.8
		1 RB high	0	22.7	19.0	3.7	0-1	22.1	19.3	2.8
		50% RB low	0-1	21.6	18.9	2.7	0-1	20.6	18.9	1.7
		50% RB mid	0-1	21.7	18.9	2.8	0-1	20.7	18.9	1.8
		50% RB high	0-1	21.7	18.9	2.8	0-1	20.8	18.8	2.0
		100% RB	0-1	21.7	18.9	2.8	0-2	20.7	18.9	1.8
	23255 / 784.5	1 RB low	0	22.8	18.9	3.9	0-1	21.5	18.7	2.8
		1 RB mid	0	22.7	19.1	3.6	0-1	21.5	19.0	2.5
		1 RB high	0	22.8	19.0	3.8	0-1	21.5	18.8	2.7
		50% RB low	0-1	21.7	18.9	2.8	0-1	20.8	19.0	1.8
		50% RB mid	0-1	21.7	19.0	2.7	0-1	20.8	18.7	2.1
		50% RB high	0-1	21.7	19.0	2.7	0-1	20.8	19.1	1.7
		100% RB	0-1	21.7	19.0	2.7	0-2	20.8	18.8	2.0
10.0	23230 / 782	1 RB low	0	22.8	19.1	3.7	0-1	21.5	18.8	2.7
		1 RB mid	0	22.8	19.0	3.8	0-1	21.5	18.7	2.8
		1 RB high	0	**22.9**	**19.1**	3.8	0-1	21.6	18.9	2.7
		50% RB low	0-1	21.6	18.9	2.7	0-1	20.6	19.1	1.5
		50% RB mid	0-1	21.7	**19.0**	2.7	0-1	20.8	19.0	1.8
		50% RB high	0-1	**21.7**	18.9	2.8	0-1	20.8	18.6	2.2
		100% RB	0-1	21.6	18.9	2.7	0-2	20.7	19.0	1.7

Table 26: Test results conducted power measurement LTE FDD 13 700 MHz.

8.2.12 Justification of SAR measurements in LTE mode

According to Chapter 5 'SAR test procedures for LTE devices of FCC KDB Publication 941225 D05 the following test configurations for standalone measurements of the largest channel bandwidth (chapter 5.2) had to be taken into consideration:

5.2.1. QPSK with 1 RB allocation
Start with the largest channel bandwidth and measure SAR for QPSK with 1 RB allocation, using the RB offset and *required test channel* combination with the highest maximum output power for RB offsets at the upper edge, middle and lower edge of each *required test channel*. When the *reported* SAR is ≤ 0.8 W/kg, testing of the remaining RB offset configurations and *required test channels* is not required for 1 RB allocation; otherwise, SAR is required for the remaining *required test channels* and only for the RB offset configuration with the highest output power for that channel.6 When the *reported* SAR of a *required test channel* is > 1.45 W/kg, SAR is required for all three RB offset configurations for that *required test channel*.

5.2.2. QPSK with 50% RB allocation
The procedures required for 1 RB allocation in 5.2.1 are applied to measure the SAR for QPSK with 50% RB allocation.

5.2.3. QPSK with 100% RB allocation
For QPSK with 100% RB allocation, SAR is not required when the highest maximum output power for 100 % RB allocation is less than the highest maximum output power in 50% and 1 RB allocations and the highest *reported* SAR for 1 RB and 50% RB allocation in 5.2.1 and 5.2.2 are ≤ 0.8 W/kg. Otherwise, SAR is measured for the highest output power channel and if the *reported* SAR is > 1.45 W/kg, the remaining *required test channels* must also be tested.

5.2.4. Higher order modulations
For each modulation besides QPSK; e.g., 16-QAM, 64-QAM, apply the QPSK procedures in sections 5.2.1, 5.2.2 and 5.2.3 to determine the QAM configurations that may need SAR measurement. For each configuration identified as required for testing, SAR is required only when the highest maximum output power for the configuration in the higher order modulation is > ½ dB higher than the same configuration in QPSK or when the *reported* SAR for the QPSK configuration is > 1.45 W/kg.

Testing of other channel bandwidths was not necessary because the output power of equivalent channel configurations was less than ½ dB larger compared to the largest channel bandwidth and reported SAR was < 1.45 W/kg

Conducted and radiated measurements were performed with the maximum number of bundled TTIs supported by the DUT (see section 2.4 for details).

8.2.13 MPR information in LTE mode

There is a permanently applied MPR implemented by the manufacturer.
MPR is enabled for this device according to 3GPP TS36.101.

Modulation	Channel bandwidth / resource block configuration						Target MPR	3 GPP MPR
	1.4 MHz	3 MHz	5 MHz	10 MHz	15 MHz	20 MHz		
QPSK	> 5	> 4	> 8	> 12	> 16	> 18	1	≤ 1
16QAM	≤ 5	≤ 4	≤ 8	≤ 12	≤ 16	≤ 18	1	≤ 1
16QAM	> 5	> 4	> 8	> 12	> 16	> 18	2	≤ 2

Therefore there is no power reduction at 1.4 MHz bandwidth with 50% RB allocation (3 RBs).

Additional differences in conducted power are not caused by implemented MPR but depend on measurement uncertainty and allowable tolerances per 3GPP or tune-up.
A-MPR was disabled for all SAR tests.

Power backoff is lower than lowest power level allowed by MPR for full power according to 3GPP.
Therefore power levels for back off are rather constant for all bandwith and resource block configurations.

8.2.14 LTE - Carrier Aggregation

The tests for Carrier Aggregation were performed by the applicant itself. The system set up and detailed test results are attached in **Annex F: LTE Carrier Aggregation.**

The relevant test results are given in the following paragraphs.

Remark: None of the LTE Carrier Aggregation settings leads to conducted power values exceeding the conducted power in LTE mode by more than 0.5 dB,
Therefore no additional SAR measurements were performed with LTE Carrier Aggregation.

8.2.14.1 LTE - Carrier Aggregation B4

			Output Power (conducted_CA)			Output Power (Conducted_Non-CA)		Deviaton (nonCA - CA) [dB]	
BW [MHz]	Channel / Frequency [MHz]	Resource block allocation	Average Output Power [dBm]	Average Output Power [dBm]	SCC setting (band 4)	Average Output Power [dBm]	Average Output Power [dBm]		
			QPSK	16-QAM		QPSK	16-QAM	QPSK	16-QAM
5	19975 / 1712.5	100% RB	22.1	21.0	10 MHz BW 100% RB	22.2	21.1	0.1	0.1
	20175 / 1732.5	100% RB	21.7	20.8	10 MHz BW 100% RB	21.8	20.8	0.1	0.0
	20375 / 1752.5	100% RB	22.0	21.0	10 MHz BW 100% RB	22.1	21.2	0.1	0.2
10	20000 / 1715.0	100% RB	22.1	21.1	10 MHz BW 100% RB	22.2	21.1	0.1	0.0
	20175 / 1732.5	100% RB	21.8	20.8	10 MHz BW 100% RB	21.8	20.9	0.0	0.1
	20350 / 1750.0	100% RB	22.1	20.9	10 MHz BW 100% RB	22.1	21.1	0.0	0.2

Table 27: Results for LTE B4 default power.

			Output Power (conducted_CA)			Output Power (Conducted_Non-CA)		Deviaton (nonCA - CA) [dB]	
BW [MHz]	Channel / Frequency [MHz]	Resource block allocation	Average Output Power [dBm]	Average Output Power [dBm]	SCC setting (band 4)	Average Output Power [dBm]	Average Output Power [dBm]		
			QPSK	16-QAM		QPSK	16-QAM	QPSK	16-QAM
5	19975 / 1712.5	100% RB	13.0	13.1	10 MHz BW 100% RB	12.5	12.6	-0.5	-0.5
	20175 / 1732.5	100% RB	13.0	13.0	10 MHz BW 100% RB	12.5	12.5	-0.5	-0.5
	20375 / 1752.5	100% RB	13.1	13.1	10 MHz BW 100% RB	12.6	12.6	-0.5	-0.5
10	20000 / 1715.0	100% RB	13.2	13.2	10 MHz BW 100% RB	12.7	12.7	-0.5	-0.5
	20175 / 1732.5	100% RB	13.2	13.0	10 MHz BW 100% RB	12.7	12.5	-0.5	-0.5
	20350 / 1750.0	100% RB	13.3	13.2	10 MHz BW 100% RB	12.8	12.7	-0.5	-0.5

Table 28: Results for LTE B4 back off power.

8.2.14.2 LTE - Carrier Aggregation B13

			Output Power (conducted_CA)			Output Power (Conducted_Non-CA)		Deviaton (nonCA - CA) [dB]	
BW [MHz]	Channel / Frequency [MHz]	Resource block allocation	Average Output Power [dBm]	Average Output Power [dBm]	SCC setting (band 13)	Average Output Power [dBm]	Average Output Power [dBm]		
			QPSK	16-QAM		QPSK	16-QAM	QPSK	16-QAM
10	23230 / 782	100% RB	21.9	21.0	5 MHz BW 100% RB	22.3	21.3	0.4	0.3
	23230 / 782	100% RB	21.9	21.0	10 MHz BW 100% RB	22.3	21.3	0.4	0.3

Table 29: Results for LTE B13 default power.

			Output Power (conducted_CA)			Output Power (Conducted_Non-CA)		Deviaton (nonCA - CA) [dB]	
BW [MHz]	Channel / Frequency [MHz]	Resource block allocation	Average Output Power [dBm]	Average Output Power [dBm]	SCC setting (band 13)	Average Output Power [dBm]	Average Output Power [dBm]		
			QPSK	16-QAM		QPSK	16-QAM	QPSK	16-QAM
10	23230 / 782	100% RB	18.9	19.0	5 MHz BW 100% RB	19.1	19.1	0.2	0.1
	23230 / 782	100% RB	18.9	19.0	10 MHz BW 100% RB	19.1	19.1	0.2	0.1

Table 30: Results for LTE B13 back off power.

8.2.14.3 LTE - Carrier Aggregation B2

Bandwidth [MHz]	Channel / Frequency [MHz]	Resource block allocation	Output Power (conducted_CA) Average Output Power [dBm] QPSK	Output Power (conducted_CA) Average Output Power [dBm] 16-QAM	SCC setting (band 13)	Output Power (Conducted_Non-CA) Average Output Power [dBm] QPSK	Output Power (Conducted_Non-CA) Average Output Power [dBm] 16-QAM	Deviaton (nonCA - CA) [dB] QPSK	Deviaton (nonCA - CA) [dB] 16-QAM
default power									
5 MHz	18625 / 1852.5	100% RB	22.11	21.13	10 MHz BW 100% RB	21.98	21.09	-0.13	-0.04
	18900 / 1880.0	100% RB	21.76	20.75	10 MHz BW 100% RB	21.73	20.73	-0.03	-0.02
	19175 / 1907.5	100% RB	22.26	21.20	10 MHz BW 100% RB	22.22	21.16	-0.04	-0.04
10 MHz	18650 / 1855.0	100% RB	22.12	21.07	10 MHz BW 100% RB	22.04	21.00	-0.08	-0.07
	18900 / 1880.0	100% RB	21.78	20.87	10 MHz BW 100% RB	21.77	20.84	-0.01	-0.03
	19150 / 1905.0	100% RB	22.10	21.02	10 MHz BW 100% RB	22.10	21.11	0.00	0.09
backoff power									
5 MHz	18625 / 1852.5	100% RB	12.55	12.45	10 MHz BW 100% RB	12.41	12.26	-0.14	-0.19
	18900 / 1880.0	100% RB	12.39	12.48	10 MHz BW 100% RB	12.46	12.34	0.07	-0.14
	19175 / 1907.5	100% RB	12.23	12.19	10 MHz BW 100% RB	12.13	12.07	-0.10	-0.12
10 MHz	18650 / 1855.0	100% RB	12.43	12.29	10 MHz BW 100% RB	12.30	12.19	-0.13	-0.10
	18900 / 1880.0	100% RB	12.52	12.56	10 MHz BW 100% RB	12.41	12.47	-0.11	-0.09
	19150 / 1905.0	100% RB	12.41	12.41	10 MHz BW 100% RB	12.33	12.33	-0.08	-0.08

Table 31: Results for LTE B2 back off power.
Default Power S/N CB5126DPJR
Backoff Power S/N CB5126SKBX

8.2.14.4 LTE - Carrier Aggregation B13

			Output Power (conducted_CA)			Output Power (Conducted_Non-CA)		Deviaton (nonCA - CA) [dB]	
Bandwidth [MHz]	Channel / Frequency [MHz]	Resource block allocation	Average Output Power [dBm]	Average Output Power [dBm]	SCC setting (band 2)	Average Output Power [dBm]	Average Output Power [dBm]		
			QPSK	16-QAM		QPSK	16-QAM	QPSK	16-QAM
default power									
10 MHz	23230 / 782	100% RB	21.82	20.86	5 MHz BW 100% RB	21.70	20.73	-0.12	-0.13
10 MHz	23230 / 782	100% RB	21.83	20.85	10 MHz BW 100% RB	21.70	20.73	-0.13	-0.12
backoff power									
10 Mhz	23230 / 782	100% RB	18.66	18.65	5 MHz BW 100% RB	18.59	18.60	-0.07	-0.05
10 MHz	23230 / 782	100% RB	18.66	18.66	10 MHz BW 100% RB	18.59	18.60	-0.07	-0.06

Table 32: Results for LTE B13.
B13 Default Power S/N CB5126DPJR
B13 Backoff Power S/N CB5126SKBX

8.2.15 Conducted power measurements WLAN 2.4 GHz

802.11b		maximum average conducted output power [dBm]			
Band	**Ch**	**1Mbps**	**2Mbps**	**5.5Mbps**	**11Mbps**
2450MHz	1	10.2	10.2	10.1	10.3
	6	10.2	10.4	10.0	10.2
	11	**10.3**	10.4	10.4	10.2

Table 33: Test results conducted power measurement 802.11b

802.11g		maximum average conducted output power [dBm]							
Band	**Ch**	**6Mbps**	**9Mbps**	**12Mbps**	**18Mbps**	**24Mbps**	**36Mbps**	**48Mbps**	**54Mbps**
2450MHz	1	9.7	9.8	9.3	9.3	9.2	8.9	8.7	8.5
	6	**9.9**	9.8	9.8	9.6	9.3	8.9	8.8	8.4
	11	9.7	9.7	9.7	9.6	9.7	9.4	8.9	9.2

Table 34: Test results conducted power measurement 802.11g

802.11n HT-20		maximum average conducted output power [dBm]							
Band	**Ch**	**MCS-0 6.5Mbps**	**MCS-1 13Mbps**	**MCS-2 19.5Mbps**	**MCS-3 26Mbps**	**MCS-4 39Mbps**	**MCS-5 52Mbps**	**MCS-6 58.5Mbps**	**MCS-7 65Mbps**
2450MHz	1	**9.7**	9.5	9.3	9.1	9.0	8.8	8.8	8.6
	6	9.7	9.5	9.4	9.3	9.2	8.7	8.6	8.5
	11	9.5	9.7	9.3	9.3	9.2	9.0	8.7	8.5

Table 35: Test results conducted power measurement 802.11n HT-20

8.2.16 Conducted power measurements WLAN 5 GHz

802.11a		maximum average conducted output power [dBm]							
Band [MHz]	Ch	6Mbps	9Mbps	12Mbps	18Mbps	24Mbps	36Mbps	48Mbps	54Mbps
5200	36	10.2	10.0	10.0	9.7	9.6	9.7	9.4	9.2
	40	10.4	10.3	10.1	9.9	9.8	9.6	9.5	9.2
	44	10.4	10.3	10.2	10.1	10.2	10.0	9.4	9.7
	48	**10.6**	10.5	10.1	9.9	9.8	10.2	9.5	9.5
5300	52	**10.6**	10.5	10.4	10.3	10.2	9.9	9.8	9.7
	56	10.3	10.3	10.3	10.1	9.9	9.7	9.4	9.3
	60	10.4	10.3	10.3	10.0	9.9	9.5	9.5	9.4
	64	10.3	10.4	10.2	10.0	10.1	9.7	9.6	9.4
5600	100	10.1	10.0	10.1	10.1	9.7	9.5	9.0	9.3
	104	9.8	9.7	9.7	9.4	9.5	9.2	8.9	8.8
	108	10.0	9.9	9.6	9.8	9.3	9.1	8.9	8.9
	112	9.6	9.9	9.5	9.4	9.5	9.2	9.1	8.9
	116	9.9	9.8	9.8	9.7	9.5	9.3	9.1	8.9
	120	9.9	9.8	9.7	9.9	9.7	9.5	9.1	9.1
	124	9.8	10.0	9.9	9.5	9.4	9.2	9.1	8.9
	128	9.9	9.9	9.8	9.8	9.5	9.2	9.1	9.0
	132	10.1	9.9	9.8	9.7	9.5	9.2	9.1	9.0
	136	**10.1**	10.0	10.0	9.8	9.5	9.3	9.2	9.1
	140	10.0	9.9	9.8	9.7	9.4	9.2	9.1	8.9
5800	149	10.2	10.1	9.8	10.0	9.8	9.5	9.0	9.1
	153	**10.3**	9.9	10.1	10.0	9.8	9.5	9.3	9.1
	157	10.2	9.9	10.0	9.7	9.5	9.8	9.2	9.3
	161	10.1	9.9	10.1	9.8	9.3	9.6	9.2	9.2
	165	10.0	10.0	9.8	9.8	9.6	9.2	9.2	9.0

Table 36: Test results conducted power measurement 802.11a

802.11n HT-20 / 802.11ac VHT-20										
		maximum average conducted output power [dBm]								
Band [MHz]	Ch	MCS-0 6.5Mbps	MCS-1 13Mbps	MCS-2 19.5Mbps	MCS-3 26Mbps	MCS-4 39Mbps	MCS-5 52Mbps	MCS-6 58.5Mbps	MCS-7 65Mbps	MCS-8 78Mbps
5200	36	9.5	9.6	9.2	9.1	9.2	8.7	8.7	8.5	8.8
	40	9.7	9.6	9.5	9.4	9.2	8.8	8.7	8.7	8.6
	44	9.9	9.8	9.6	9.6	9.0	8.9	9.1	9.0	8.9
	48	9.9	9.7	9.6	9.6	9.4	9.2	9.1	9.0	8.8
5300	52	10.0	9.8	9.7	9.7	9.5	9.1	9.1	9.0	8.8
	56	9.6	9.7	9.5	9.3	9.1	8.9	8.8	8.7	8.6
	60	9.7	9.5	9.4	9.3	9.1	8.8	8.8	8.7	8.6
	64	9.8	9.9	9.5	9.6	9.2	8.8	9.0	8.9	8.5
5600	100	9.7	9.5	9.4	9.2	9.0	8.8	8.8	8.7	8.6
	104	9.6	9.1	9.3	9.1	8.5	8.5	8.3	8.6	8.1
	108	9.2	9.0	8.9	8.9	8.6	8.3	8.3	8.6	8.1
	112	9.2	9.0	9.1	8.9	8.7	8.5	8.6	8.5	8.1
	116	9.3	9.2	9.0	9.2	8.7	8.4	8.4	8.3	8.3
	120	9.1	9.4	9.2	9.0	8.8	8.6	8.6	8.5	8.4
	124	9.5	8.9	9.1	8.9	8.9	8.8	8.7	8.5	8.6
	128	9.3	9.1	9.0	9.2	8.9	8.9	8.7	8.7	8.6
	132	9.3	9.4	9.0	8.9	8.7	8.5	8.5	8.4	8.7
	136	9.7	9.3	8.9	9.0	8.6	8.5	8.7	8.6	8.6
	140	9.3	9.1	9.2	9.0	9.0	8.6	8.7	8.7	8.5
5800	149	9.5	9.4	9.3	9.4	8.9	8.9	8.7	8.5	8.5
	153	9.5	9.4	9.0	9.5	8.9	8.7	8.6	8.4	8.3
	157	9.6	9.7	9.3	9.4	8.9	8.8	8.7	8.6	8.3
	161	9.5	9.1	9.1	8.8	9.0	8.8	8.6	8.6	8.4
	165	9.3	9.5	9.0	9.2	8.7	8.6	8.5	8.5	8.4

Table 37: Test results conducted power measurement 802.11n HT-20 / 802.11ac VHT-20

802.11n HT-40 / 802.11ac VHT-40											
		maximum average conducted output power [dBm]									
Band [MHz]	Ch	MCS-0 13.5Mbps	MCS-1 27Mbps	MCS-2 40.5Mbps	MCS-3 54Mbps	MCS-4 81Mbps	MCS-5 108Mbps	MCS-6 121.5Mbps	MCS-7 135Mbps	MCS-8 162Mbps	MCS-9 180Mbps
5200	38	9.6	9.2	9.0	9.0	8.4	8.4	8.2	8.3	8.1	7.9
	46	9.7	9.6	9.2	9.0	8.8	8.6	8.2	8.3	8.5	8.3
5300	54	9.9	9.7	9.3	8.9	8.9	8.5	8.1	8.3	8.4	8.4
	62	9.8	9.5	9.2	8.8	8.5	8.7	8.0	8.5	8.1	8.3
5600	102	9.4	9.1	8.8	8.8	8.4	8.2	8.0	7.9	7.9	7.9
	110	9.2	8.9	8.7	8.3	8.4	7.9	7.8	7.9	7.8	7.7
	118	9.2	9.0	8.9	8.4	8.2	7.9	7.9	7.7	7.5	7.9
	126	9.2	9.0	8.7	8.8	8.5	8.3	7.9	7.9	7.7	7.7
	134	9.5	8.9	8.9	8.4	8.0	7.8	7.7	7.9	7.5	7.8
5800	151	9.4	9.1	9.2	8.8	8.5	8.3	8.2	8.1	7.9	7.9
	159	9.6	9.1	8.9	8.9	8.5	8.2	8.0	8.0	8.1	7.6

Table 38: Test results conducted power measurement 802.11n HT-40 / 802.11ac VHT-40

802.11ac VHT-80											
		maximum average conducted output power [dBm]									
Band	Ch	MCS-0 29.3Mbps	MCS-1 58.5Mbps	MCS-2 87.8Mbps	MCS-3 117Mbps	MCS-4 175.5Mbps	MCS-5 234Mbps	MCS-6 263.3Mbps	MCS-7 292.5Mbps	MCS-8 351Mbps	MCS-9 390Mbps
5200	42	9.3	8.8	8.9	8.5	8.1	7.8	7.7	7.8	7.5	7.5
5300	58	9.5	9.0	8.6	8.6	8.0	7.9	7.7	7.8	7.5	7.5
5600	106	9.1	8.7	8.1	8.1	7.6	7.5	7.3	7.3	7.0	6.9
	122	8.8	8.4	8.4	8.0	7.7	7.4	7.5	7.5	7.3	7.3
5800	155	9.1	8.7	8.4	8.1	7.7	7.6	7.4	7.7	7.2	7.2

Table 39: Test results conducted power measurement 802.11ac VHT-80

8.2.17 Standalone SAR Test Exclusion

Standalone SAR test exclusion considerations for **Body** position					
Communication system	freq. (MHz)	P_{avg}* (dBm)	P_{avg}* (mW)	**threshold$_{1-g}$ comparison value**	SAR test exclusion
GSM 850	835	25.0	316.2	57.8	no
GSM 1900	1880	23.0	199.5	55.0	no
UMTS FDD II	1880	24.5	281.8	77.7	no
UMTS FDD V	835	24.5	281.8	51.5	no
C2K - BC0	835	24.7	295.1	53.9	no
C2K - BC1	1880	24.2	263.0	72.5	no
LTE FDD 2	1880	24.0	251.2	68.9	no
LTE FDD 4	1750	24.0	251.2	66.5	no
LTE FDD 7	2535	24.0	251.2	80.0	no
LTE FDD 13	782	24.0	251.2	44.4	no
WLAN 2450	2450	11.5	14.1	4.4	no
WLAN 5.2 GHz	5200	11.5	14.1	6.4	no
WLAN 5.3 GHz	5300	11.5	14.1	6.5	no
WLAN 5.6 GHz	5600	11.5	14.1	6.7	no
WLAN 5.8 GHz	5800	11.5	14.1	6.8	no
Bluetooth 2450	2450	9.7	9.3	2.9	yes

Table 40: Standalone SAR test exclusion considerations in **body position**

P_{avg}* - maximum possible output power declared by manufacturer

The **1-g SAR test exclusion thresholds** for 100 MHz to 6 GHz at *test separation distances* ≤ 50 mm are determined by:
[(*max. power of channel, including tune-up tolerance, mW*)/(*min. test separation distance, mm*)] · [√f(GHz)] ≤ **3.0** for 1-g SAR, where:

- f(GHz) is the RF channel transmit frequency in GHz
- Power and distance are rounded to the nearest mW and mm before calculation
- The result is rounded to one decimal place for comparison

When the minimum test separation distance is < 5 mm, a distance of 5 mm is applied to determine SAR test exclusion

8.2.18 SAR measurement positions

SAR measurement positions						
mode	front	rear	left edge	right edge	top edge	bottom edge
GSM 850	no	yes	no	yes	yes	no
GSM 1900	no	yes	no	yes	yes	no
UMTS FDD II	no	yes	no	yes	yes	no
UMTS FDD V	no	yes	no	yes	yes	no
C2K – BC0	no	yes	no	yes	yes	no
C2K – BC1	no	yes	no	yes	yes	no
LTE FDD 2	no	yes	no	yes	yes	no
LTE FDD 4	no	yes	no	yes	yes	no
LTE FDD 7	no	yes	no	yes	yes	no
LTE FDD 13	no	yes	no	yes	yes	no
WLAN 2450	no	yes	no	no	yes	no
WLAN 5.2 GHz	no	yes	no	no	yes	no
WLAN 5.3 GHz	no	yes	no	no	yes	no
WLAN 5.6 GHz	no	yes	no	no	yes	no
WLAN 5.8 GHz	no	yes	no	no	yes	no

Note:
The distance of the antennas (see Annexe Photo documentation) to all adjacent edges SAR test exclusion for adjacent edges is possible according to KDB 447498 D01v05 chapter 4.3.1 2) or Appendix A/B.

Communication system	freq. (MHz)	P_{avg}* (dBm)	P_{avg}* (mW)	distance (mm)	**exclusion threshold$_{1g}$ (mW)**	SAR test exclusion
GSM 835	835	25.0	**316.2**	157.0	**759.8**	yes
GSM 1900	1880	23.0	**199.5**	157.0	**1179.4**	yes
UMTS FDD II	1880	24.5	**281.8**	157.0	**1179.4**	yes
UMTS FDD V	835	24.5	**281.8**	157.0	**759.8**	yes
C2K - BC0	835	24.7	**295.1**	157.0	**759.8**	yes
C2K - BC1	1880	24.2	**263.0**	157.0	**1179.4**	yes
LTE FDD 2	1880	24.0	**251.2**	157.0	**1179.4**	yes
LTE FDD 4	1750	24.0	**251.2**	157.0	**1183.4**	yes
LTE FDD 7	2535	24.0	**251.2**	157.0	**1164.2**	yes
LTE FDD 13	782	24.0	**251.2**	157.0	**727.5**	yes
WLAN 2450	2450	11.5	**14.1**	24.9	**47.6**	yes
WLAN 5.2 GHz	5200	11.5	**14.1**	24.9	**32.7**	yes
WLAN 5.3 GHz	5300	11.5	**14.1**	24.9	**32.4**	yes
WLAN 5.6 GHz	5600	11.5	**14.1**	24.9	**31.5**	yes
WLAN 5.8 GHz	5800	11.5	**14.1**	24.9	**31.0**	yes
Bluetooth 2450	2450	9.7	**9.3**	24.9	**47.6**	yes

Table 41: Adjacent edge SAR test exclusion considerations

1) The 1-g and 10-g SAR test exclusion thresholds for 100 MHz to 6 GHz at *test separation distances* ≤ 50 mm are determined by:
[(*max. power of channel, including tune-up tolerance, mW*)/(*min. test separation distance, mm*)]x[√f(GHz)] ≤ 3.0 for 1-g SAR and ≤ 7.5 for 10-g extremity SAR, where

- f(GHz) is the RF channel transmit frequency in GHz
- Power and distance are rounded to the nearest mW and mm before calculation
- The result is rounded to one decimal place for comparison
- 3.0 and 7.5 are referred to as the numeric thresholds in the step 2 below

The test exclusions are applicable only when the minimum *test separation distance* is ≤ 50 mm and for transmission frequencies between 100 MHz and 6 GHz. When the minimum *test separation distance* is < 5 mm, a distance of 5 mm is applied to determine SAR test exclusion.

2) At 100 MHz to 6 GHz and for *test separation distances* > 50 mm, the SAR test exclusion threshold is determined according to the following, and as illustrated in Appendix B:

a) [Power allowed at numeric threshold for 50 mm in step 1) + (test separation distance - 50 mm)·(f(MHz)/150)] mW, at 100 MHz to 1500 MHz
b) [Power allowed at numeric threshold for 50 mm in step 1) + (test separation distance - 50 mm)·10] mW at > 1500 MHz and ≤ 6 GHz

8.3 SAR test results

8.3.1 Results overview

measured / extrapolated SAR numbers - body worn - GSM 850 MHz														
Ch.	Freq. (MHz)	time slots	dist. (mm)	modulation	power level	Position	cond. P_{max} (dBm)		SAR_{1g} results(W/kg)		SAR_{10g} (W/kg)		Power drift (dB)	liquid (°C)
							declared**	measured	measured	extrapolated	measured	extrapolated		
190	836.6	3	16	GMSK	default	rear	29.2	28.4	0.304	0.365	0.211	0.254	-0.03	22.0
190	836.6	3	10	GMSK	default	top edge	29.2	28.4	0.271	0.326	0.192	0.231	0.09	22.0
190	836.6	3	0	GMSK	default	right edge	29.2	28.4	0.430	0.517	0.284	0.341	0.01	22.0
128	824.2	2	0	GMSK	backoff	rear	27.8	26.2	0.837	1.210	0.412	0.596	0.14	22.0
190	836.6	2	0	GMSK	backoff	rear	27.8	26.2	0.660	0.954	0.324	0.468	0.09	22.0
251	848.8	2	0	GMSK	backoff	rear	27.8	26.3	0.552	0.780	0.271	0.383	0.13	22.0
190	836.6	2	0	GMSK	backoff	top edge	27.8	26.2	0.367	0.530	0.157	0.227	0.01	22.0
128	824.2	2	0	GMSK	backoff	rear + HS	27.8	26.2	0.835	1.207	0.409	0.591	0.05	22.0
128	824.2	2	0	GMSK	backoff	rear	27.8	26.2	**0.847**	**1.224**	**0.418**	**0.604**	0.12	22.0

Table 42: Test results body worn SAR GSM 850 MHz (see max. SAR plot in Annex B.1: GSM 850MHz page 108)

measured / extrapolated SAR numbers - body worn - GSM 1900 MHz														
Ch.	Freq. (MHz)	time slots	dist. (mm)	modulation	power level	Position	cond. P_{max} (dBm)		SAR_{1g} results(W/kg)		SAR_{10g} (W/kg)		Power drift (dB)	liquid (°C)
							declared**	measured	measured	extrapolated	measured	extrapolated		
661	1880.0	4	16	GMSK	default	rear	25.7	25.1	0.468	0.537	0.270	0.310	-0.01	21.8
661	1880.0	4	10	GMSK	default	top edge	25.7	25.1	0.329	0.378	0.193	0.222	-0.08	21.8
661	1880.0	4	0	GMSK	default	right edge	25.7	25.1	0.213	0.245	0.122	0.140	0.09	21.8
512	1850.2	2	0	GMSK	backoff	rear	20.6	19.2	0.816	**1.126**	0.359	**0.496**	-0.12	21.8
661	1880.0	2	0	GMSK	backoff	rear	20.6	19.5	0.846	1.090	0.369	0.475	-0.02	21.8
810	1909.8	2	0	GMSK	backoff	rear	20.6	19.6	0.875	1.102	**0.374**	0.471	-0.03	21.8
661	1880.0	2	0	GMSK	backoff	top edge	20.6	19.5	0.215	0.277	0.090	0.116	-0.01	21.8
810	1909.8	2	0	GMSK	backoff	rear	20.6	19.6	**0.876**	1.103	0.373	0.470	-0.04	21.8

Table 43: Test results body worn SAR GSM 1900 MHz (see max. SAR plot in Annex B.2: GSM 1900MHz page 109)

* - repeated at the highest SAR measurement according to the FCC KDB 865664
** - maximum possible output power declared by manufacturer

measured / extrapolated SAR numbers - body worn - UMTS FDD II 1880 MHz													
Ch.	Freq. (MHz)	test condition	dist. (mm)	power level	Position	cond. P_{max} (dBm)		SAR_{1g} results(W/kg)		SAR_{10g} (W/kg)		Power drift (dB)	liquid (°C)
						declared**	measured	measured	extrapolated	measured	extrapolated		
9400	1880.0	RMC	16	default	rear	24.5	24.1	0.647	0.709	**0.378**	0.414	-0.02	21.8
9400	1880.0	RMC	10	default	top edge	24.5	24.1	0.381	0.418	0.220	0.241	0.01	21.8
9400	1880.0	RMC	0	default	right edge	24.5	24.1	0.293	0.321	0.127	0.139	-0.09	21.8
9262	1852.4	RMC	0	backoff	rear	13.5	11.9	0.693	1.002	0.300	0.434	-0.01	21.8
9400	1880.0	RMC	0	backoff	rear	13.5	11.9	0.726	1.049	0.311	**0.450**	0.00	21.8
9538	1907.6	RMC	0	backoff	rear	13.5	11.9	**0.727**	**1.051**	0.306	0.442	0.01	21.8
9400	1880.0	RMC	0	backoff	top edge	13.5	11.9	0.178	0.257	0.075	0.108	0.01	21.8

Table 44: Test results body worn SAR UMTS FDD II 1880 MHz (see max. SAR plot in Annex B.3: UMTS FDD II page 110)

measured / extrapolated SAR numbers - body worn - UMTS FDD V 850 MHz													
Ch.	Freq. (MHz)	test condition	dist. (mm)	power level	Position	cond. P_{max} (dBm)		SAR_{1g} results(W/kg)		SAR_{10g} (W/kg)		Power drift (dB)	liquid (°C)
						declared**	measured	measured	extrapolated	measured	extrapolated		
4182	836.4	RMC	16	default	rear	24.5	24.0	0.228	0.256	0.158	0.177	0.02	22.0
4182	836.4	RMC	10	default	top edge	24.5	24.0	0.180	0.202	0.129	0.145	0.00	22.0
4182	836.4	RMC	0	default	right edge	24.5	24.0	0.302	0.339	0.197	0.221	0.01	22.0
4132	826.4	RMC	0	backoff	rear	20.8	19.7	**0.807**	**1.040**	0.417	0.537	0.03	22.0
4182	836.4	RMC	0	backoff	rear	20.8	19.7	0.787	1.014	0.406	0.523	0.07	22.0
4233	846.6	RMC	0	backoff	rear	20.8	19.7	0.760	0.979	**0.434**	**0.559**	0.08	22.0
4182	836.4	RMC	0	backoff	top edge	20.8	19.7	0.324	0.417	0.158	0.204	-0.01	22.0
4132	826.4	RMC	0	backoff	rear	20.8	19.7	0.804	1.036	0.418	0.538	0.04	22.0

Table 45: Test results body worn SAR UMTS FDD V 850 MHz (see max. SAR plot in Annex B.4: UMTS FDD V page 111)

* - repeated at the highest SAR measurement according to the FCC KDB 865664
** - maximum possible output power declared by manufacturer

measured / extrapolated SAR numbers - body worn - CDMA2000 BC0 850 MHz												
Ch.	Freq. (MHz)	dist. (mm)	power level	Position	cond. P_{max} (dBm)		SAR_{1g} results(W/kg)		SAR_{10g} (W/kg)		Power drift (dB)	liquid (°C)
					declared**	measured	measured	extrapolated	measured	extrapolated		
384	836.6	16	default	rear	24.7	23.9	0.279	0.335	0.192	0.231	-0.02	21.6
384	836.6	10	default	top edge	24.7	23.9	0.263	0.316	0.186	0.224	0.01	21.6
384	836.6	0	default	right edge	24.7	23.9	0.309	0.371	0.205	0.246	0.00	21.6
1013	824.7	0	backoff	rear	21.0	19.5	0.834	1.178	0.408	0.576	0.08	21.6
384	836.6	0	backoff	rear	21.0	19.3	0.797	1.179	0.388	0.574	0.10	21.6
777	848.3	0	backoff	rear	21.0	19.4	0.748	1.081	0.365	0.528	0.11	21.6
384	836.6	0	backoff	top edge	21.0	19.3	0.454	0.672	0.201	0.297	0.07	21.6
1013	824.7	0	backoff	rear	21.0	19.5	**0.838**	**1.184**	**0.409**	**0.578**	0.07	21.6

Table 46: Test results body worn SAR CDMA BC0 850 MHz Mode: RC 3/3, H-PSK, SO 32 (see max. SAR plot in Annex B.5: CDMA 2000 BC0 page 112)

measured / extrapolated SAR numbers - body worn - CDMA2000 BC1 1900 MHz												
Ch.	Freq. (MHz)	dist. (mm)	power level	Position	cond. P_{max} (dBm)		SAR_{1g} results(W/kg)		SAR_{10g} (W/kg)		Power drift (dB)	liquid (°C)
					declared**	measured	measured	extrapolated	measured	extrapolated		
600	1880.00	16	default	rear	24.2	24.2	0.760	0.760	**0.438**	0.438	-0.02	21.8
600	1880.00	10	default	top edge	24.2	24.2	0.574	0.574	0.316	0.316	0.01	21.8
600	1880.00	0	default	right edge	24.2	24.2	0.352	0.352	0.164	0.164	-0.03	21.8
25	1851.25	0	backoff	rear	14.2	13.5	0.912	1.072	0.388	0.456	-0.07	21.8
600	1880.00	0	backoff	rear	14.2	13.5	**0.996**	**1.170**	0.419	**0.492**	-0.08	21.8
1175	1908.75	0	backoff	rear	14.2	12.8	0.783	1.081	0.325	0.449	-0.06	21.8
600	1880.00	0	backoff	top edge	14.2	13.5	0.260	0.305	0.109	0.128	0.00	21.8
600	1880.00	0	backoff	rear	14.2	13.5	0.970	1.140	0.411	0.483	-0.05	21.8

Table 47: Test results body worn SAR CDMA BC1 1900 MHz Mode: RC 3/3, H-PSK, SO 32 (see max. SAR plot in Annex B.6: CDMA 2000 BC1 page 113)

* - repeated at the highest SAR measurement according to the FCC KDB 865664
** - maximum possible output power declared by manufacturer

measured / extrapolated SAR numbers - body worn - LTE FDD 2 1900 MHz													
Ch.	Freq. (MHz)	RB offset	dist. (mm)	power level	Position	cond. P_{max} (dBm)		SAR_{1g} results(W/kg)		SAR_{10g} (W/kg)		Power drift (dB)	liquid (°C)
						declared**	measured	measured	extrapolated	meas.	extrap.		
20MHz BW/1RB/QPSK													
18700	1860	high	16	default	rear	24.0	22.5	0.567	0.801	0.332	0.469	-0.01	21.5
18900	1880	mid	16	default	rear	24.0	22.5	0.595	0.840	0.347	0.490	0.00	21.5
19100	1900	high	16	default	rear	24.0	22.5	0.611	0.863	0.353	0.499	0.01	21.5
18700	1860	high	10	default	top edge	24.0	22.5	0.546	0.771	0.302	0.427	-0.01	21.5
18700	1860	high	0	default	right edge	24.0	22.5	0.355	0.501	0.163	0.230	0.02	21.5
18700	1860	mid	0	backoff	rear	13.8	13.3	0.971	1.089	0.408	0.458	0.03	21.5
18900	1880	mid	0	backoff	rear	13.8	13.2	0.994	1.141	0.413	0.474	-0.01	21.5
19100	1900	mid	0	backoff	rear	13.8	13.0	**1.060**	1.274	**0.436**	**0.524**	0.01	21.5
18700	1860	mid	0	backoff	top edge	13.8	13.3	0.179	0.201	0.080	0.090	0.06	21.5
20MHz BW/50RB/QPSK													
19100	1900	low	16	default	rear	23.0	21.5	0.529	0.747	0.307	0.434	-0.01	21.5
19100	1900	low	10	default	top edge	23.0	21.5	0.475	0.671	0.254	0.359	0.01	21.5
19100	1900	low	0	default	right edge	23.0	21.5	0.344	0.486	0.150	0.212	0.07	21.5
18700	1860	mid	0	backoff	rear	13.8	13.1	0.980	1.151	0.411	0.483	0.01	21.5
18900	1880	mid	0	backoff	rear	13.8	13.0	0.965	1.160	0.402	0.483	-0.01	21.5
19100	1900	mid	0	backoff	rear	13.8	12.9	1.030	1.267	0.423	0.520	0.00	21.5
18700	1860	mid	0	backoff	top edge	13.8	13.1	0.183	0.215	0.081	0.095	0.03	21.5
20MHz BW/100RB/QPSK													
19100	1900	low	16	default	rear	23.0	21.5	0.530	0.749	0.307	0.434	0.02	21.5
19100	1900	low	10	default	top edge	23.0	21.5	0.470	0.664	0.250	0.353	0.01	21.5
19100	1900	low	0	default	right edge	23.0	21.5	0.332	0.469	0.145	0.205	-0.01	21.5
18700	1860	low	0	backoff	rear	13.8	12.8	0.963	1.212	0.401	0.505	-0.03	21.5
18900	1880	low	0	backoff	rear	13.8	12.7	0.982	1.265	0.405	0.522	-0.02	21.5
19100	1900	low	0	backoff	rear	13.8	12.7	0.991	**1.277**	0.405	0.522	0.00	21.5
18700	1860	low	0	backoff	top edge	13.8	12.8	0.184	0.232	0.081	0.102	0.08	21.5
19100	1900	low	0	backoff	rear	13.8	12.7	0.911	1.174	0.379	0.488	0.03	21.5

Table 48: Test results body worn SAR LTE FDD 2 1900 MHz (see max. SAR plot in Annex B.7: LTE FDD 2 page 114)

* - repeated at the highest SAR measurement according to the FCC KDB 865664
** - maximum possible output power declared by manufacturer

measured / extrapolated SAR numbers - body worn - LTE FDD 4 1750 MHz													
Ch.	Freq. (MHz)	RB offset	dist. (mm)	power level	Position	cond. P_{max} (dBm)		SAR_{1g} results(W/kg)		SAR_{10g} (W/kg)		Power drift (dB)	liquid (°C)
						declared**	measured	measured	extrapolated	meas.	extrap.		
20MHz BW/1RB/QPSK													
20050	1720.0	high	16	default	rear	24.0	22.7	0.510	0.688	0.328	0.442	-0.03	21.7
20050	1720.0	high	10	default	top edge	24.0	22.7	0.567	0.765	0.304	0.410	-0.01	21.7
20175	1732.5	high	10	default	top edge	24.0	22.4	0.536	0.775	0.287	0.415	0.03	21.7
20300	1745.0	high	10	default	top edge	24.0	22.5	0.556	0.785	0.297	0.420	0.02	21.7
20050	1720.0	high	0	default	right edge	24.0	22.7	0.726	0.979	0.335	0.452	-0.05	21.7
20175	1732.5	high	0	default	right edge	24.0	22.4	0.731	1.057	0.333	0.481	-0.02	21.7
20300	1745.0	high	0	default	right edge	24.0	22.5	0.817	1.154	0.369	**0.521**	-0.01	21.7
20050	1720.0	mid	0	backoff	rear	13.8	13.4	0.768	0.842	0.341	0.374	-0.06	21.7
20175	1732.5	mid	0	backoff	rear	13.8	13.5	0.726	0.778	0.322	0.345	-0.06	21.7
20300	1745.0	mid	0	backoff	rear	13.8	13.4	0.909	0.997	0.397	0.435	-0.04	21.7
20175	1732.5	mid	0	backoff	top edge	13.8	13.5	0.130	0.139	0.057	0.061	0.07	21.7
20MHz BW/50RB/QPSK													
20050	1720.0	high	16	default	rear	23.0	21.5	0.409	0.578	0.266	0.376	-0.01	21.7
20050	1720.0	high	10	default	top edge	23.0	21.5	0.449	0.634	0.241	0.340	0.03	21.7
20050	1720.0	high	0	default	right edge	23.0	21.5	0.605	0.855	0.338	0.477	-0.04	21.7
20175	1732.5	high	0	default	right edge	23.0	21.5	0.647	0.914	0.348	0.492	0.02	21.7
20300	1745.0	high	0	default	right edge	23.0	21.5	0.584	0.825	0.331	0.468	-0.02	21.7
20050	1720.0	mid	0	backoff	rear	13.8	13.4	0.973	1.067	0.416	0.456	-0.09	21.7
20175	1732.5	mid	0	backoff	rear	13.8	13.4	0.761	0.834	0.334	0.366	-0.06	21.7
20300	1745.0	mid	0	backoff	rear	13.8	13.3	**0.992**	1.113	0.419	0.470	-0.08	21.7
20175	1732.5	mid	0	backoff	top edge	13.8	13.4	0.127	0.139	0.056	0.061	0.12	21.7
20MHz BW/100RB/QPSK													
20050	1720.0	low	16	default	rear	23.0	21.5	0.396	0.559	0.257	0.363	-0.08	21.7
20050	1720.0	low	10	default	top edge	23.0	21.5	0.445	0.629	0.238	0.336	0.03	21.7
20050	1720.0	low	0	default	right edge	23.0	21.5	0.589	0.832	0.330	0.466	-0.04	21.7
20175	1732.5	low	0	default	right edge	23.0	21.5	0.574	0.811	0.320	0.452	0.00	21.7
20300	1745.0	low	0	default	right edge	23.0	21.5	0.562	0.794	0.317	0.448	-0.05	21.7
20050	1720.0	low	0	backoff	rear	13.8	13.0	0.769	0.925	0.327	0.393	-0.08	21.7
20175	1732.5	low	0	backoff	rear	13.8	13.2	0.977	1.122	0.418	0.480	-0.14	21.7
20300	1745.0	low	0	backoff	rear	13.8	13.1	0.991	**1.164**	**0.420**	0.493	-0.12	21.7
20175	1732.5	low	0	backoff	top edge	13.8	13.2	0.130	0.149	0.057	0.066	0.12	21.7
20300	1745.0	low	0	backoff	rear	13.8	13.1	0.846	0.994	0.357	0.419	0.09	21.7

Table 49: Test results body worn SAR LTE FDD 4 1750 MHz (see max. SAR plot in Annex B.8: LTE FDD 4 page 116)
** - maximum possible output power declared by manufacturer
* - repeated at the highest SAR measurement according to the FCC KDB 865664

measured / extrapolated SAR numbers - body worn - LTE FDD7 2600 MHz													
Ch.	Freq. (MHz)	RB offset	dist. (mm)	power level	Position	cond. P_{max} (dBm)		SAR_{1g} results(W/kg)		SAR_{10g} (W/kg)		Power drift (dB)	liquid (°C)
						declared**	measured	measured	extrapolated	meas.	extrap.		
20MHz BW/1RB/QPSK													
20850	2510	low	16	default	rear	24.0	22.7	0.239	0.322	0.125	0.169	0.00	22.0
20850	2510	low	10	default	top edge	24.0	22.7	0.514	0.693	0.251	0.339	-0.04	22.0
20850	2510	low	0	default	right edge	24.0	22.7	0.089	0.120	0.041	0.056	0.08	22.0
20850	2510	mid	0	backoff	rear	16.4	15.7	0.907	1.066	0.332	0.390	0.07	22.0
21100	2535	mid	0	backoff	rear	16.4	15.2	0.593	0.782	0.213	0.281	0.06	22.0
21350	2560	mid	0	backoff	rear	16.4	15.7	**1.010**	**1.187**	**0.359**	**0.422**	0.00	22.0
20850	2510	mid	0	backoff	top edge	16.4	15.7	0.524	0.616	0.192	0.226	-0.02	22.0
21350	2560	mid	0	backoff	rear	16.4	15.7	1.000	1.175	0.355	0.417	0.05	22.0
20MHz BW/50RB/QPSK													
20850	2510	low	16	default	rear	23.0	21.8	0.280	0.369	0.147	0.194	0.06	22.0
20850	2510	low	10	default	top edge	23.0	21.8	0.621	0.819	0.305	0.402	0.00	22.0
21100	2535	high	10	default	top edge	23.0	21.6	0.536	0.740	0.261	0.360	-0.01	22.0
21350	2560	high	10	default	top edge	23.0	21.7	0.471	0.635	0.228	0.308	0.01	22.0
20850	2510	low	0	default	right edge	23.0	21.8	0.099	0.131	0.047	0.061	0.11	22.0
20850	2510	high	0	backoff	rear	16.4	15.8	0.852	0.978	0.309	0.355	0.06	22.0
21100	2535	mid	0	backoff	rear	16.4	15.2	0.556	0.733	0.195	0.257	0.09	22.0
21350	2560	mid	0	backoff	rear	16.4	15.7	0.722	0.848	0.259	0.304	0.07	22.0
20850	2510	high	0	backoff	top edge	16.4	15.8	0.620	0.712	0.227	0.261	-0.06	22.0
20MHz BW/100RB/QPSK													
20850	2510	low	16	default	rear	23.0	21.7	0.274	0.370	0.142	0.192	0.08	22.0
20850	2510	low	10	default	top edge	23.0	21.7	0.449	0.606	0.218	0.294	-0.02	22.0
20850	2510	low	0	default	right edge	23.0	21.7	0.095	0.128	0.045	0.061	0.11	22.0
20850	2510	low	0	backoff	rear	16.4	15.9	0.788	0.884	0.292	0.328	0.08	22.0
21100	2535	low	0	backoff	rear	16.4	15.0	0.636	0.878	0.234	0.323	0.11	22.0
21350	2560	low	0	backoff	rear	16.4	15.6	0.905	1.088	0.327	0.393	0.09	22.0
20850	2510	low	0	backoff	top edge	16.4	15.9	0.432	0.485	0.162	0.182	-0.14	22.0

Table 50: Test results body worn SAR LTE FDD 7 2600 MHz (see max. SAR plot in Annex B.9: LTE FDD 7 page 118)
* - repeated at the highest SAR measurement according to the FCC KDB 865664
** - maximum possible output power declared by manufacturer

measured / extrapolated SAR numbers - body worn - LTE FDD 13 750 MHz													
Ch.	Freq. (MHz)	RB offset	dist. (mm)	power level	Position	cond. P_{max} (dBm)		SAR_{1g} results(W/kg)		SAR_{10g} (W/kg)		Power drift (dB)	liquid (°C)
						declared**	measured	measured	extrapolated	meas.	extrap.		
10MHz BW/1RB/QPSK													
23230	782.0	high	16	default	rear	24.0	22.9	0.183	0.236	0.130	0.167	0.01	21.8
23230	782.0	high	10	default	top edge	24.0	22.9	0.144	0.186	0.102	0.131	-0.01	21.8
23230	782.0	high	0	default	right edge	24.0	22.9	0.276	0.356	0.177	0.228	0.04	21.8
23230	782.0	high	0	backoff	rear	19.8	19.1	0.848	0.996	0.406	0.477	0.08	21.8
23230	782.0	high	0	backoff	top edge	19.8	19.1	0.360	0.423	0.150	0.176	0.04	21.8
10MHz BW/25RB/QPSK													
23230	782.0	high	16	default	rear	23.0	21.7	0.145	0.196	0.103	0.139	0.02	21.8
23230	782.0	high	10	default	top edge	23.0	21.7	0.113	0.152	0.080	0.108	0.00	21.8
23230	782.0	high	0	default	right edge	23.0	21.7	0.219	0.295	0.140	0.189	0.04	21.8
23230	782.0	mid	0	backoff	rear	19.8	19.0	**0.891**	1.071	0.424	0.510	0.07	21.8
23230	782.0	mid	0	backoff	top edge	19.8	19.0	0.414	0.498	0.173	0.208	0.07	21.8
10MHz BW/50RB/QPSK													
23230	782.0	low	0	backoff	rear	19.8	18.9	0.887	**1.091**	**0.426**	**0.524**	0.09	21.8
23230	782.0	low	0	backoff	top edge	19.8	18.9	0.340	0.418	0.150	0.185	0.03	21.8
23230	782.0	low	0	backoff	rear	19.8	18.9	0.885	1.089	0.426	0.524	0.07	21.8

Table 51: Test results body worn SAR LTE FDD 13 700 MHz (see max. SAR plot in Annex B.10: LTE FDD 13 page 119)

** - maximum possible output power declared by manufacturer
* - repeated at the highest SAR measurement according to the FCC KDB 865664

measured / extrapolated SAR numbers - body worn - WLAN 2450 MHz												
Ch.	Freq. (MHz)	Test condition	dist. (mm)	Position	cond. P_{max} (dBm)		SAR_{1g} results(W/kg)		SAR_{10g} (W/kg)		Power drift (dB)	liquid (°C)
					declared**	measured	measured	extrapolated	meas.	extrap.		
6	2437	1Mbit/s	16	rear	11.5	10.2	0.017	0.022	0.009	0.012	0.14	21.9
6	2437	1Mbit/s	10	top edge	11.5	10.2	0.027	0.037	0.014	0.018	0.11	21.9
1	2412	1Mbit/s	0	rear	11.5	10.2	0.478	0.645	0.165	0.223	-0.07	21.9
6	2437	1Mbit/s	0	rear	11.5	10.2	**0.526**	**0.710**	**0.181**	**0.244**	-0.02	21.9
11	2462	1Mbit/s	0	rear	11.5	10.3	0.505	0.666	0.117	0.154	-0.07	21.9
11	2462	1Mbit/s	0	top edge	11.5	10.3	0.118	0.156	0.050	0.066	0.00	21.9

Table 52: Test results body worn SAR WLAN 2450 MHz (see max. SAR plot in Annex B.11: WLAN 2450MHz page 121)
** - maximum possible output power declared by manufacturer

measured / extrapolated SAR numbers - Body worn - WLAN 5 GHz												
Ch.	Freq. (MHz)	Test conditio	distance (mm)	Position	cond. P_{max} (dBm)		SAR_{1g} results(W/kg)		SAR_{10g} (W/kg)		Power drift (dB)	liquid (°C)
					declared**	measured	measured	extrapolated	meas.	extrap.		
48	5240	6Mbit/s	0	rear	11.5	10.6	0.590	0.726	**0.189**	**0.233**	-0.01	21.9
52	5260	6Mbit/s	0	rear	11.5	10.6	0.582	0.716	0.185	0.228	0.06	21.9
104	5520	6Mbit/s	0	rear	11.5	9.8	0.584	0.864	0.105	0.155	0.09	21.9
116	5580	6Mbit/s	0	rear	11.5	9.9	0.553	0.799	0.098	0.141	-0.05	21.9
124	5620	6Mbit/s	0	rear	11.5	9.8	0.548	0.811	0.098	0.145	0.03	21.9
136	5680	6Mbit/s	0	rear	11.5	10.1	**0.696**	**0.961**	0.152	0.210	0.09	21.9
153	5765	6Mbit/s	0	rear	11.5	10.3	0.463	0.610	0.092	0.122	0.04	21.9
136	5680	6Mbit/s	16	rear	11.5	10.1	0.034	0.047	0.009	0.012	0.03	21.9
48	5240	6Mbit/s	0	top edge	11.5	10.6	0.402	0.495	0.140	0.172	0.01	21.9
52	5260	6Mbit/s	0	top edge	11.5	10.6	0.381	0.469	0.128	0.157	-0.04	21.9
136	5680	6Mbit/s	0	top edge	11.5	10.1	0.497	0.686	0.144	0.199	-0.05	21.9
153	5765	6Mbit/s	0	top edge	11.5	10.3	0.374	0.493	0.090	0.118	-0.09	21.9
136	5680	6Mbit/s	10	top edge	11.5	10.1	0.080	0.111	0.026	0.036	-0.01	21.9

Table 53: Test results body worn SAR WLAN 5 GHz (see max. SAR plot in Annex B.12: WLAN 5GHz page 122)
* - repeated at the highest SAR measurement according to the FCC KDB 865664
** - maximum possible output power declared by manufacturer

Estimated stand alone SAR.					
Communication system	freq. (GHz)	distance (mm)	P_{avg} (dBm)	P_{avg} (mW)	estimated$_{1-g}$ (W/kg)
Bluetooth 2450	2.45	5	9.7	9.3	0.390
	2.45	10	9.7	9.3	0.195
	2.45	16	9.7	9.3	0.122

Table 54: Estimated stand alone SAR_{max} for Bluetooth 2450MHz body worn

8.3.2 General description of test procedures

- The DUT is tested using CMU 200 and CMW 500 communications testers as controller unit to set test channels and maximum output power to the DUT, as well as for measuring the conducted peak power.
- Test positions as described in the tables above are in accordance with the specified test standard.
- Tests in body position were performed in that configuration, which generates the highest time based averaged output power (see conducted power results).
- UMTS was tested in RMC mode with 12.2 kbit/s and TPC bits set to 'all 1'.
- WLAN was tested in 802.11a/b mode with 1 MBit/s and 6 MBit/s. According to KDB 248227 the SAR testing for 802.11g/n/ac is not required since the maximum power of 802.11g/n/ac is less ¼ dB higher than maximum power of 802.11a/b.
- Required WLAN test channels were selected according to KDB 248227
- The device was tested in different scenarios that depended on the activation of a power back off triggered by the proximity sensor.
  - Scenario1: Rear position with 16mm distance without power reduction
  - Scenario2: Top position with 10mm distance without power reduction
  - Scenario3: Rear position with 0mm distance with power reduction
  - Scenario4: Top position with 0mm distance with power reduction
  - Scenario5: Right side position with 0mm distance without power reduction
- According to IEEE 1528 the SAR test shall be performed at middle channel. Testing of top and bottom channel is optional.
- According to KDB 447498 D01 testing of other required channels within the operating mode of a frequency band is not required when the reported 1-g or 10-g SAR for the mid-band or highest output power channel is:
  - ≤ 0.8 W/kg or 2.0 W/kg, for 1-g or 10-g respectively, when the transmission band is ≤ 100 MHz
  - ≤ 0.6 W/kg or 1.5 W/kg, for 1-g or 10-g respectively, when the transmission band is between 100 MHz and 200 MHz
  - ≤ 0.4 W/kg or 1.0 W/kg, for 1-g or 10-g respectively, when the transmission band is ≥ 200 MHz
- IEEE 1528-2003 requires the middle channel to be tested first. This generally applies to wireless devices that are designed to operate in technologies with tight tolerances for maximum output power variations across channels in the band. When the maximum output power variation across the required test channels is > ½ dB, instead of the middle channel, the highest output power channel must be used.

8.3.3 Multiple Transmitter Information

The following tables list information which is relevant for the decision if a simultaneous transmit evaluation is necessary according to FCC KDB 447498D01 General RF Exposure Guidance v05.

reported SAR **WWAN** and **WLAN 2.4GHz**, **ΣSAR** evaluation, **SPLSRi**						
Frequency band	Position	SARmax /W/kg		**ΣSAR**	distance	**ratio**
		WWAN	WLAN	<1.6W/kg	**Ri**, mm	≤ 0.040
GSM 850	rear 16mm	0.365	0.022	0.387		
GSM 850	top edge 10mm	0.326	0.037	0.363		
GSM 850	rear 0mm	1.224	0.710	**1.934**	138.5	0.019
GSM 850	top edge 0mm	0.530	0.156	0.686		
GSM 1900	rear 16mm	0.537	0.022	0.559		
GSM 1900	top edge 10mm	0.378	0.037	0.415		
GSM 1900	rear 0mm	1.126	0.710	**1.836**	168.6	0.015
GSM 1900	top edge 0mm	0.277	0.156	0.433		
UMTS FDD II	rear 16mm	0.709	0.022	0.731		
UMTS FDD II	top edge 10mm	0.418	0.037	0.455		
UMTS FDD II	rear 0mm	1.051	0.710	**1.761**	174.6	0.013
UMTS FDD II	top edge 0mm	0.257	0.156	0.413		
UMTS FDD V	rear 16mm	0.256	0.022	0.278		
UMTS FDD V	top edge 10mm	0.202	0.037	0.239		
UMTS FDD V	rear 0mm	1.040	0.710	**1.750**	135.5	0.017
UMTS FDD V	top edge 0mm	0.417	0.156	0.573		
CDMA2000 BC0	rear 16mm	0.335	0.022	0.357		
CDMA2000 BC0	top edge 10mm	0.316	0.037	0.353		
CDMA2000 BC0	rear 0mm	1.184	0.710	**1.894**	138.5	0.019
CDMA2000 BC0	top edge 0mm	0.672	0.156	0.828		
CDMA2000 BC1	rear 16mm	0.760	0.022	0.782		
CDMA2000 BC1	top edge 10mm	0.574	0.037	0.611		
CDMA2000 BC1	rear 0mm	1.170	0.710	**1.880**	170.1	0.015
CDMA2000 BC1	top edge 0mm	0.305	0.156	0.461		
LTE FDD 2	rear 16mm	0.863	0.022	0.885		
LTE FDD 2	top edge 10mm	0.771	0.037	0.808		
LTE FDD 2	rear 0mm	1.277	0.710	**1.987**	174.6	0.016
LTE FDD 2	top edge 0mm	0.232	0.156	0.388		
LTE FDD 4	rear 16mm	0.688	0.022	0.710		
LTE FDD 4	top edge 10mm	0.785	0.037	0.822		
LTE FDD 4	rear 0mm	1.164	0.710	**1.874**	168.7	0.015
LTE FDD 4	top edge 0mm	0.149	0.156	0.305		
LTE FDD 7	rear 16mm	0.370	0.022	0.392		
LTE FDD 7	top edge 10mm	0.819	0.037	0.856		
LTE FDD 7	rear 0mm	1.187	0.710	**1.897**	161.0	0.016
LTE FDD 7	top edge 0mm	0.712	0.156	0.868		
LTE FDD 13	rear 16mm	0.236	0.022	0.258		
LTE FDD 13	top edge 10mm	0.186	0.037	0.223		
LTE FDD 13	rear 0mm	1.091	0.710	**1.801**	140.0	0.017
LTE FDD 13	top edge 0mm	0.498	0.156	0.654		

Table 55: SAR_{max} WWAN and **WLAN 2.4GHz**, ΣSAR evaluation, **$SPLSR_i$**

reported SAR **WWAN** and **WLAN 5GHz**, **ΣSAR** evaluation, **SPLSRi**						
Frequency band	Position	SARmax /W/kg		**ΣSAR**	distance	**ratio**
		WWAN	WLAN	<1.6W/kg	**Ri**, mm	≤ 0.040
GSM 850	rear 16mm	0.365	0.047	0.412		
GSM 850	top edge 10mm	0.326	0.111	0.437		
GSM 850	rear 0mm	1.224	0.961	**2.185**	138.8	0.023
GSM 850	top edge 0mm	0.530	0.686	1.216		
GSM 1900	rear 16mm	0.537	0.047	0.584		
GSM 1900	top edge 10mm	0.378	0.111	0.489		
GSM 1900	rear 0mm	1.126	0.961	**2.087**	170.3	0.018
GSM 1900	top edge 0mm	0.277	0.686	0.963		
UMTS FDD II	rear 16mm	0.709	0.047	0.756		
UMTS FDD II	top edge 10mm	0.418	0.111	0.529		
UMTS FDD II	rear 0mm	1.051	0.961	**2.012**	176.3	0.016
UMTS FDD II	top edge 0mm	0.257	0.686	0.943		
UMTS FDD V	rear 16mm	0.256	0.047	0.303		
UMTS FDD V	top edge 10mm	0.202	0.111	0.313		
UMTS FDD V	rear 0mm	1.040	0.961	**2.001**	137.3	0.021
UMTS FDD V	top edge 0mm	0.417	0.686	1.103		
CDMA2000 BC0	rear 16mm	0.335	0.047	0.382		
CDMA2000 BC0	top edge 10mm	0.316	0.111	0.427		
CDMA2000 BC0	rear 0mm	1.184	0.961	**2.145**	140.3	0.022
CDMA2000 BC0	top edge 0mm	0.672	0.686	1.358		
CDMA2000 BC1	rear 16mm	0.760	0.047	0.807		
CDMA2000 BC1	top edge 10mm	0.574	0.111	0.685		
CDMA2000 BC1	rear 0mm	1.170	0.961	**2.131**	171.9	0.018
CDMA2000 BC1	top edge 0mm	0.305	0.686	0.991		
LTE FDD 2	rear 16mm	0.863	0.047	0.910		
LTE FDD 2	top edge 10mm	0.771	0.111	0.882		
LTE FDD 2	rear 0mm	1.277	0.961	**2.238**	176.4	0.019
LTE FDD 2	top edge 0mm	0.232	0.686	0.918		
LTE FDD 4	rear 16mm	0.688	0.047	0.735		
LTE FDD 4	top edge 10mm	0.785	0.111	0.896		
LTE FDD 4	rear 0mm	1.164	0.961	**2.125**	170.4	0.018
LTE FDD 4	top edge 0mm	0.149	0.686	0.835		
LTE FDD 7	rear 16mm	0.370	0.047	0.417		
LTE FDD 7	top edge 10mm	0.819	0.111	0.930		
LTE FDD 7	rear 0mm	1.187	0.961	**2.148**	162.8	0.019
LTE FDD 7	top edge 0mm	0.712	0.686	1.398		
LTE FDD 13	rear 16mm	0.236	0.047	0.283		
LTE FDD 13	top edge 10mm	0.186	0.111	0.297		
LTE FDD 13	rear 0mm	1.091	0.961	**2.052**	141.8	0.021
LTE FDD 13	top edge 0mm	0.498	0.686	1.184		

Table 56: SAR_{max} WWAN and **WLAN 5GHz**, ΣSAR evaluation, **$SPLSR_i$**

reported SAR **WWAN** and **Bluetooth 2.4GHz**, **ΣSAR** evaluation, **SPLSRi**						
Frequency band	Position	SARmax /W/kg		**ΣSAR**	distance	**ratio**
		WWAN	Bluetooth	<1.6W/kg	**Ri**, mm	≤ 0.040
GSM 850	rear 16mm	0.365	0.122	0.487		
GSM 850	top edge 10mm	0.326	0.195	0.521		
GSM 850	rear 0mm	1.224	0.390	**1.614**	125.0	0.016
GSM 850	top edge 0mm	0.530	0.390	0.920		
GSM 1900	rear 16mm	0.537	0.122	0.659		
GSM 1900	top edge 10mm	0.378	0.195	0.573		
GSM 1900	rear 0mm	1.126	0.390	1.516		
GSM 1900	top edge 0mm	0.277	0.390	0.667		
UMTS FDD II	rear 16mm	0.709	0.122	0.831		
UMTS FDD II	top edge 10mm	0.418	0.195	0.613		
UMTS FDD II	rear 0mm	1.051	0.390	1.441		
UMTS FDD II	top edge 0mm	0.257	0.390	0.647		
UMTS FDD V	rear 16mm	0.256	0.122	0.378		
UMTS FDD V	top edge 10mm	0.202	0.195	0.397		
UMTS FDD V	rear 0mm	1.040	0.390	1.430		
UMTS FDD V	top edge 0mm	0.417	0.390	0.807		
CDMA2000 BC0	rear 16mm	0.335	0.122	0.457		
CDMA2000 BC0	top edge 10mm	0.316	0.195	0.511		
CDMA2000 BC0	rear 0mm	1.184	0.390	1.574		
CDMA2000 BC0	top edge 0mm	0.672	0.390	1.062		
CDMA2000 BC1	rear 16mm	0.760	0.122	0.882		
CDMA2000 BC1	top edge 10mm	0.574	0.195	0.769		
CDMA2000 BC1	rear 0mm	1.170	0.390	1.560		
CDMA2000 BC1	top edge 0mm	0.305	0.390	0.695		
LTE FDD 2	rear 16mm	0.863	0.122	0.985		
LTE FDD 2	top edge 10mm	0.771	0.195	0.966		
LTE FDD 2	rear 0mm	1.277	0.390	**1.667**	125.0	0.017
LTE FDD 2	top edge 0mm	0.232	0.390	0.622		
LTE FDD 4	rear 16mm	0.688	0.122	0.810		
LTE FDD 4	top edge 10mm	0.785	0.195	0.980		
LTE FDD 4	rear 0mm	1.164	0.390	1.554		
LTE FDD 4	top edge 0mm	0.149	0.390	0.539		
LTE FDD 7	rear 16mm	0.370	0.122	0.492		
LTE FDD 7	top edge 10mm	0.819	0.195	1.014		
LTE FDD 7	rear 0mm	1.187	0.390	1.577		
LTE FDD 7	top edge 0mm	0.712	0.390	1.102		
LTE FDD 13	rear 16mm	0.236	0.122	0.358		
LTE FDD 13	top edge 10mm	0.186	0.195	0.381		
LTE FDD 13	rear 0mm	1.091	0.390	1.481		
LTE FDD 13	top edge 0mm	0.498	0.390	0.888		

Table 57: SAR_{max} WWAN and **Bluetooth 2450MHz**, ΣSAR evaluation

reported SAR **WWAN** and **WLAN 5GHz**, **ΣSAR** evaluation, **SPLSRi**							
Frequency band	Position	SARmax /W/kg			**ΣSAR**	distance	**ratio**
		WWAN	WLAN	BT	<1.6W/kg	**Ri**, mm	≤ 0.040
GSM 850	rear 16mm	0.365	0.047	0.122	0.534		
GSM 850	top edge 10mm	0.326	0.111	0.195	0.632		
GSM 850	rear 0mm	1.224	0.961	0.390	**2.575**	125.0	0.033
GSM 850	top edge 0mm	0.530	0.686	0.390	**1.606**	125.0	0.016
GSM 1900	rear 16mm	0.537	0.047	0.122	0.706		
GSM 1900	top edge 10mm	0.378	0.111	0.195	0.684		
GSM 1900	rear 0mm	1.126	0.961	0.390	**2.477**	125.0	0.031
GSM 1900	top edge 0mm	0.277	0.686	0.390	1.353		
UMTS FDD II	rear 16mm	0.709	0.047	0.122	0.878		
UMTS FDD II	top edge 10mm	0.418	0.111	0.195	0.724		
UMTS FDD II	rear 0mm	1.051	0.961	0.390	**2.402**	125.0	0.030
UMTS FDD II	top edge 0mm	0.257	0.686	0.390	1.333		
UMTS FDD V	rear 16mm	0.256	0.047	0.122	0.425		
UMTS FDD V	top edge 10mm	0.202	0.111	0.195	0.508		
UMTS FDD V	rear 0mm	1.040	0.961	0.390	**2.391**	125.0	0.030
UMTS FDD V	top edge 0mm	0.417	0.686	0.390	1.493		
CDMA2000 BC0	rear 16mm	0.335	0.047	0.122	0.504		
CDMA2000 BC0	top edge 10mm	0.316	0.111	0.195	0.622		
CDMA2000 BC0	rear 0mm	1.184	0.961	0.390	**2.535**	125.0	0.032
CDMA2000 BC0	top edge 0mm	0.672	0.686	0.390	**1.748**	125.0	0.018
CDMA2000 BC1	rear 16mm	0.760	0.047	0.122	0.929		
CDMA2000 BC1	top edge 10mm	0.574	0.111	0.195	0.880		
CDMA2000 BC1	rear 0mm	1.170	0.961	0.390	**2.521**	125.0	0.032
CDMA2000 BC1	top edge 0mm	0.305	0.686	0.390	1.381		
LTE FDD 2	rear 16mm	0.863	0.047	0.122	1.032		
LTE FDD 2	top edge 10mm	0.771	0.111	0.195	1.077		
LTE FDD 2	rear 0mm	1.277	0.961	0.390	**2.628**	125.0	0.034
LTE FDD 2	top edge 0mm	0.232	0.686	0.390	1.308		
LTE FDD 4	rear 16mm	0.688	0.047	0.122	0.857		
LTE FDD 4	top edge 10mm	0.785	0.111	0.195	1.091		
LTE FDD 4	rear 0mm	1.164	0.961	0.390	**2.515**	125.0	0.032
LTE FDD 4	top edge 0mm	0.149	0.686	0.390	1.225		
LTE FDD 7	rear 16mm	0.370	0.047	0.122	0.539		
LTE FDD 7	top edge 10mm	0.819	0.111	0.195	1.125		
LTE FDD 7	rear 0mm	1.187	0.961	0.390	**2.538**	125.0	0.032
LTE FDD 7	top edge 0mm	0.712	0.686	0.390	**1.788**	125.0	0.019
LTE FDD 13	rear 16mm	0.236	0.047	0.122	0.405		
LTE FDD 13	top edge 10mm	0.186	0.111	0.195	0.492		
LTE FDD 13	rear 0mm	1.091	0.961	0.390	**2.442**	125.0	0.031
LTE FDD 13	top edge 0mm	0.498	0.686	0.390	1.574		

Table 58: SAR_{max} **WWAN, WLAN 5GHz** and **Bluetooth 2450MHz**, ΣSAR evaluation
Minimum antenna separation distance between MAIN antenna and WLAN / Bluetooth antenna – **125 mm**

Conclusion:

ΣSAR > 1.6 W/kg, but SAR-to-(peak-locations spacing) **ratio** (**SPLSR$_i$**) is less than **0.04** therefore simultaneous transmissions SAR measurement with the enlarged zoom scan measurement and volume scan post-processing procedures is **not** required.

8.3.4 SAR peak location separation

GSM850 + WLAN2450 rear 0mm

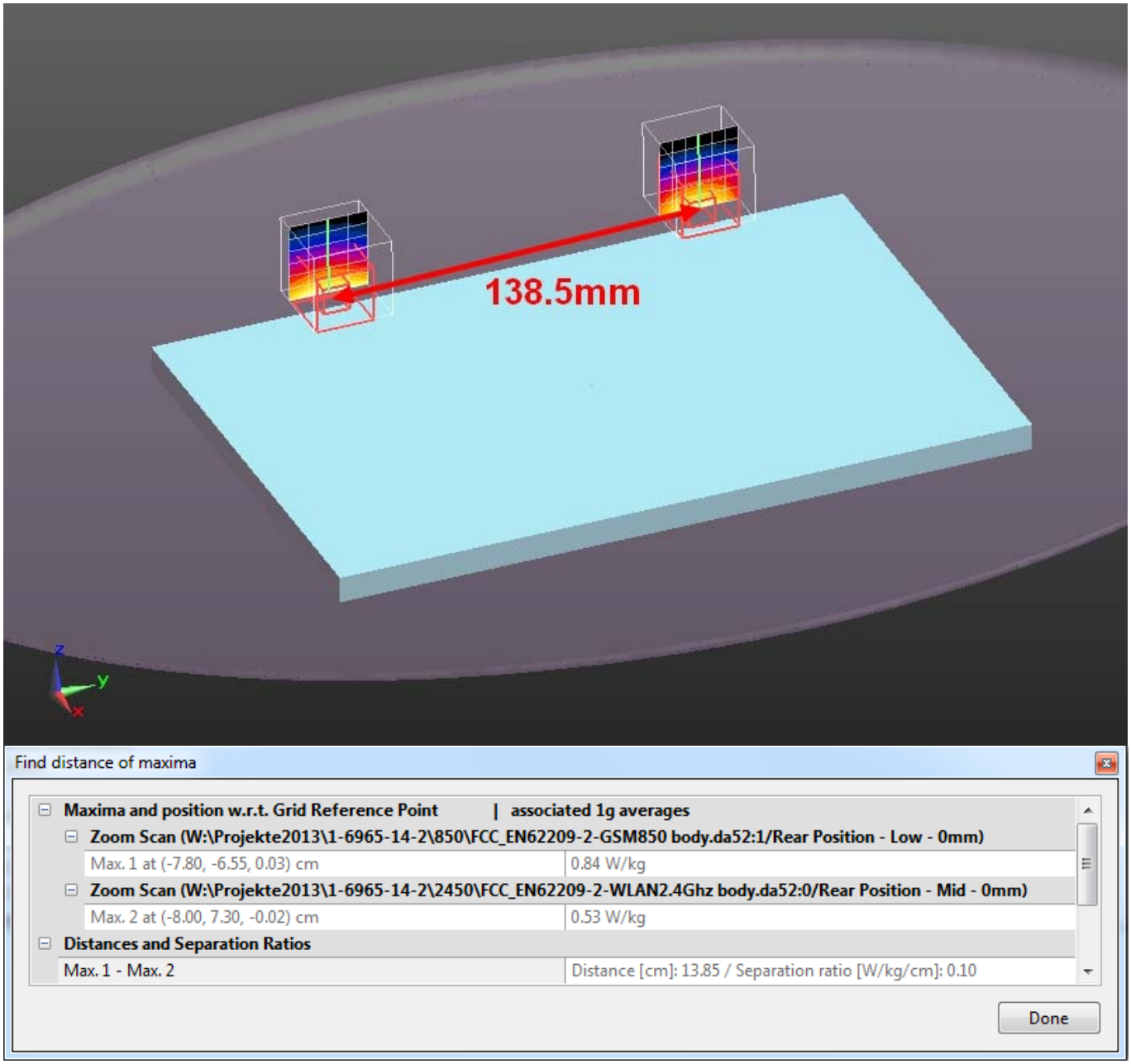

GSM1900 + WLAN2450 rear 0mm

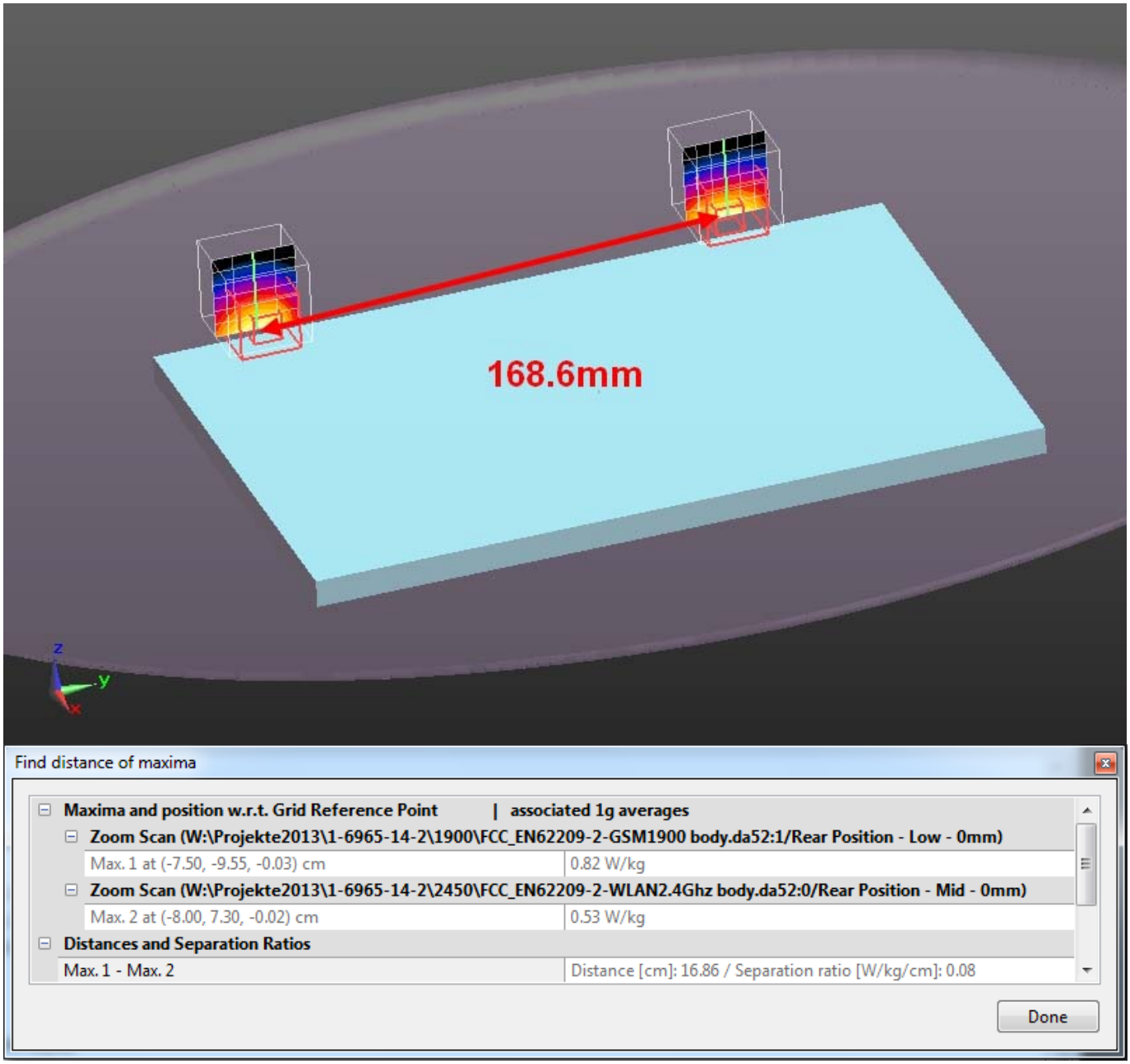

UMTS FDDII + WLAN2450 rear 0mm

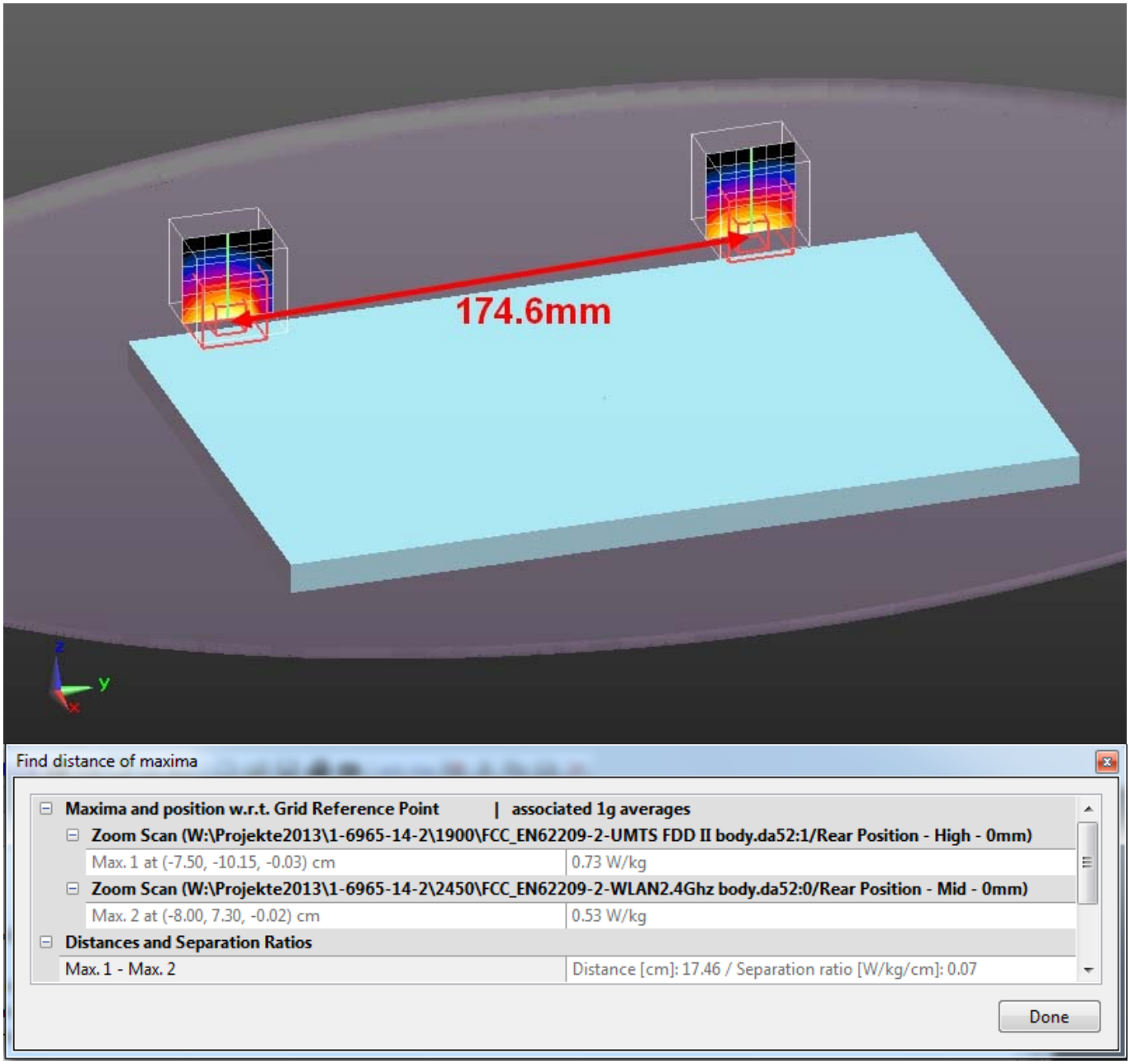

UMTS FDDV + WLAN2450 rear 0mm

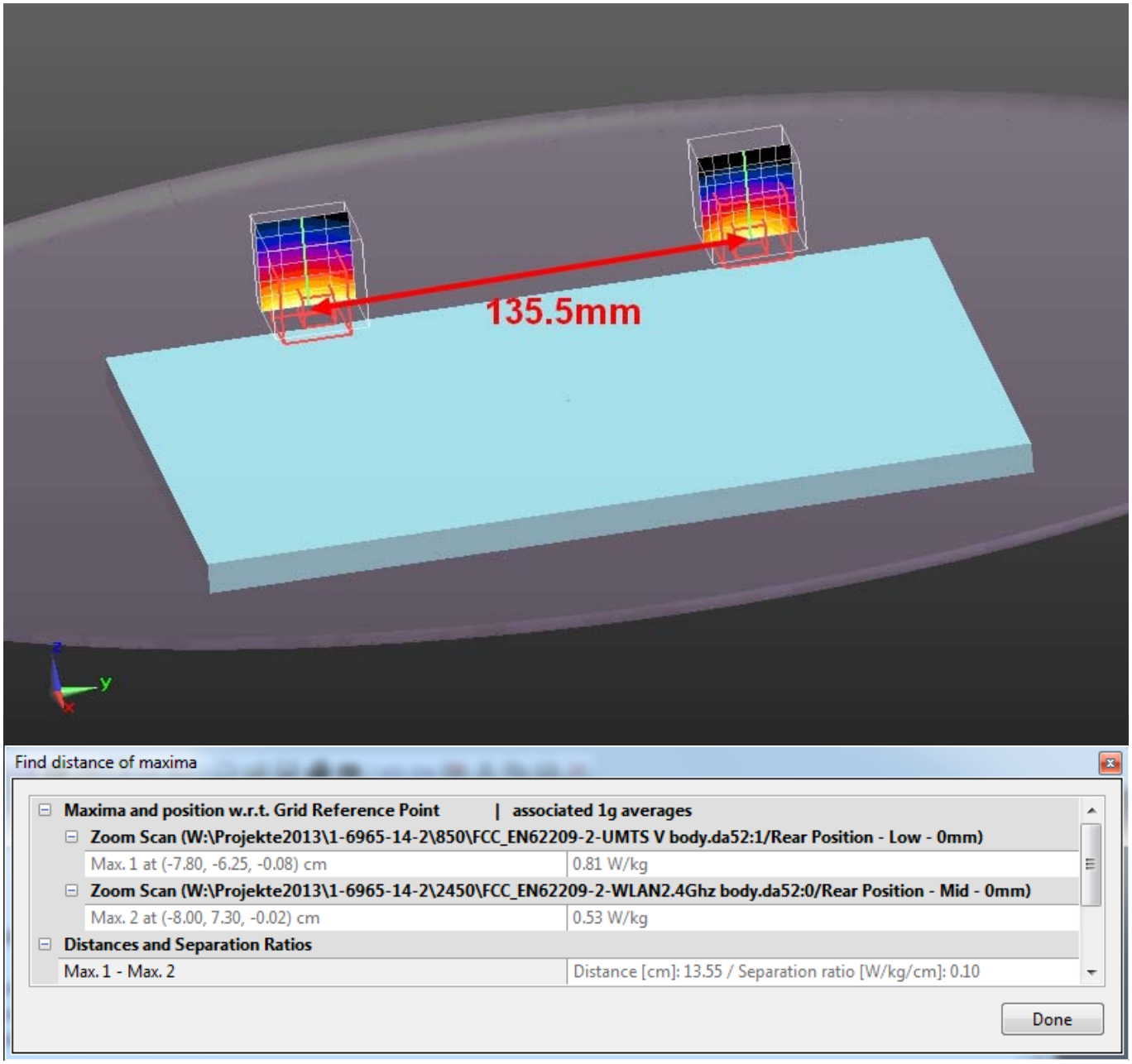

CDMA2000 BC0 + WLAN2450 rear 0mm

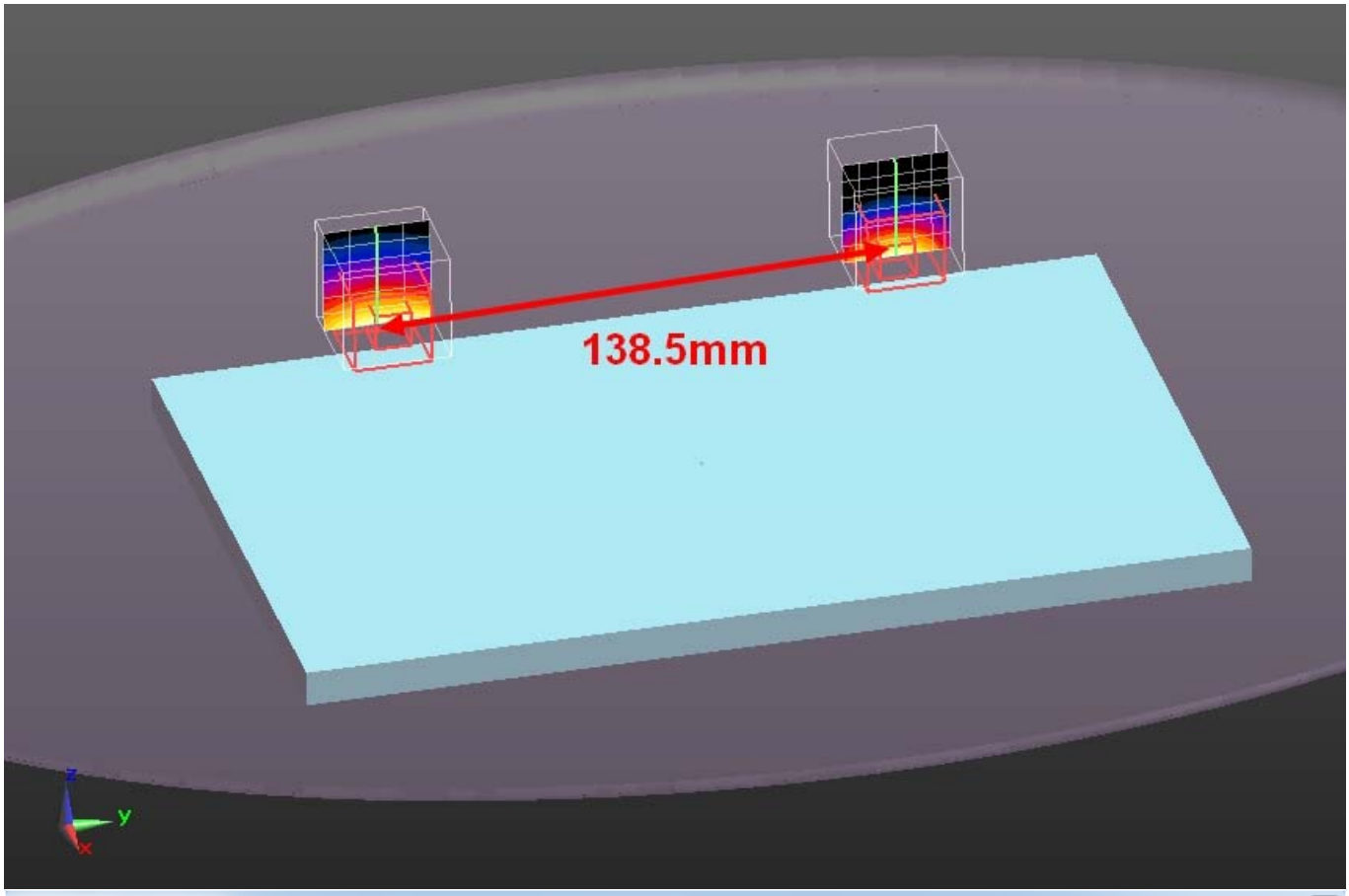

Find distance of maxima

Maxima and position w.r.t. Grid Reference Point	**associated 1g averages**
Zoom Scan (W:\Projekte2013\1-6965-14-2\850\FCC_EN62209-2-CDMA2000 BC0 body.da52:1/Rear Position - Low - 0mm WC)	
Max. 1 at (-7.95, -6.55, -0.04) cm	0.84 W/kg
Zoom Scan (W:\Projekte2013\1-6965-14-2\2450\FCC_EN62209-2-WLAN2.4Ghz body.da52:0/Rear Position - Mid - 0mm)	
Max. 2 at (-8.00, 7.30, -0.02) cm	0.53 W/kg
Distances and Separation Ratios	
Max. 1 - Max. 2	Distance [cm]: 13.85 / Separation ratio [W/kg/cm]: 0.10

Done

CDMA2000 BC1 + WLAN2450 rear 0mm

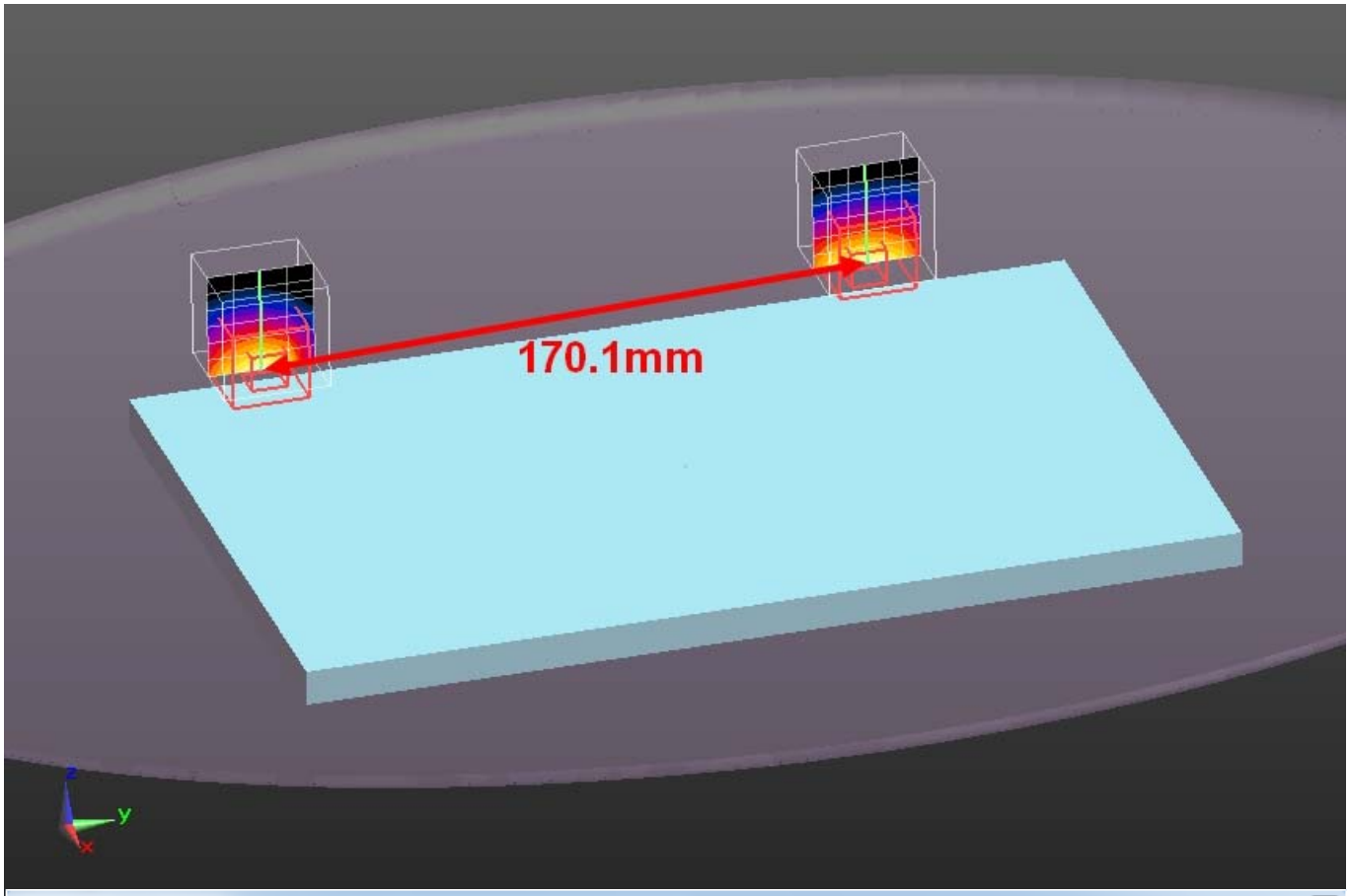

Find distance of maxima

Maxima and position w.r.t. Grid Reference Point	**associated 1g averages**
Zoom Scan (W:\Projekte2013\1-6965-14-2\1900\FCC_EN62209-2-CDMA2000 BC1 body.da52:1/Rear Position - Mid - 0mm)	
Max. 1 at (-7.35, -9.70, 0.02) cm	1.00 W/kg
Zoom Scan (W:\Projekte2013\1-6965-14-2\2450\FCC_EN62209-2-WLAN2.4Ghz body.da52:0/Rear Position - Mid - 0mm)	
Max. 2 at (-8.00, 7.30, -0.02) cm	0.53 W/kg
Distances and Separation Ratios	
Max. 1 - Max. 2	Distance [cm]: 17.01 / Separation ratio [W/kg/cm]: 0.09

Done

LTE FDD 2 + WLAN2450 rear 0mm

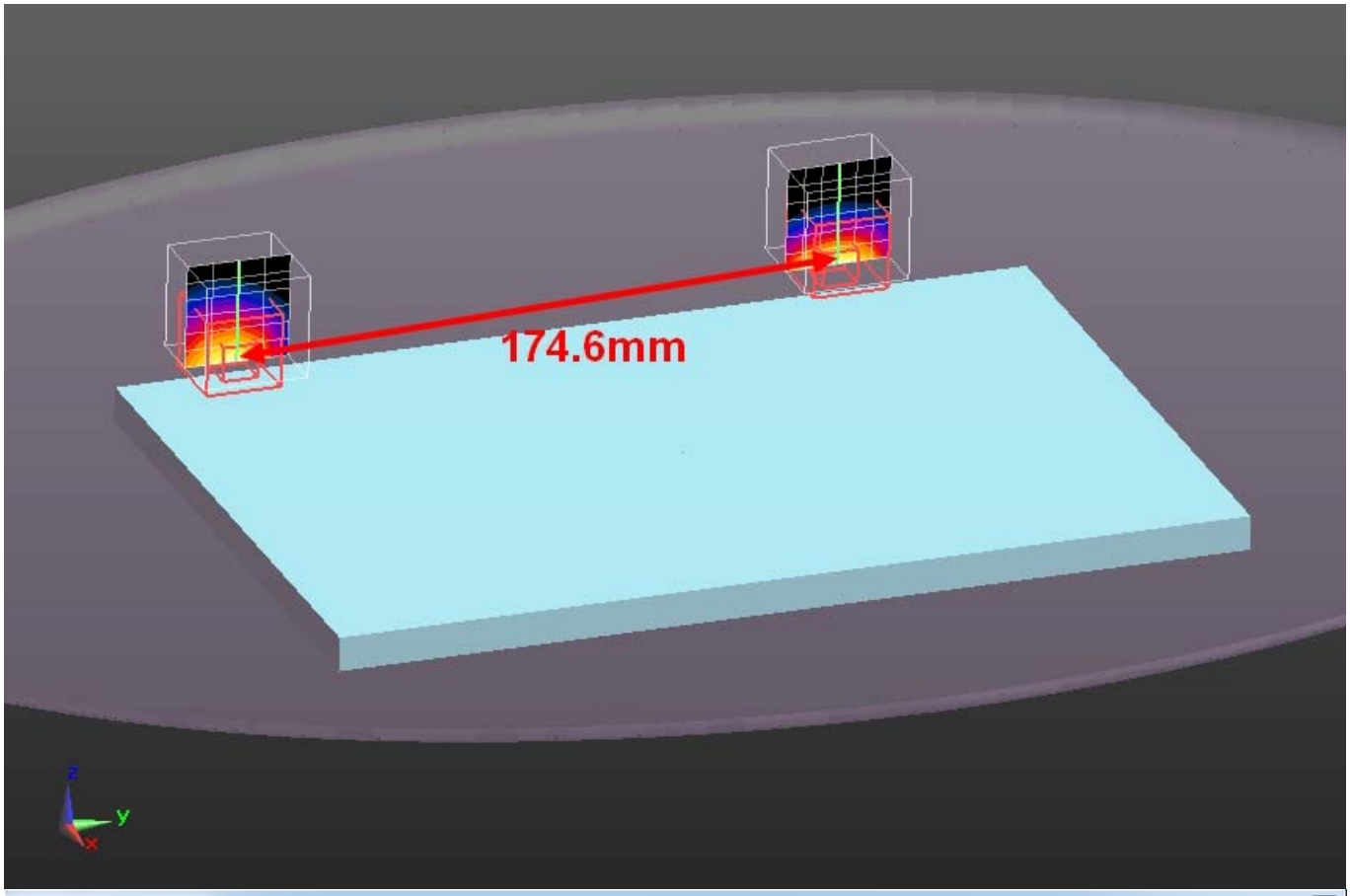

Find distance of maxima

Maxima and position w.r.t. Grid Reference Point	**associated 1g averages**
Zoom Scan (W:\Projekte2013\1-6965-14-2\1900\FCC_EN62209-2-LTE FDD 2 body.da52:3/Rear Position - High - 0RB offset - 0mm)	
Max. 1 at (-7.35, -10.15, 0.02) cm	0.99 W/kg
Zoom Scan (W:\Projekte2013\1-6965-14-2\2450\FCC_EN62209-2-WLAN2.4Ghz body.da52:0/Rear Position - Mid - 0mm)	
Max. 2 at (-8.00, 7.30, -0.02) cm	0.53 W/kg
Distances and Separation Ratios	
Max. 1 - Max. 2	Distance [cm]: 17.46 / Separation ratio [W/kg/cm]: 0.09

Done

LTE FDD 4 + WLAN2450 rear 0mm

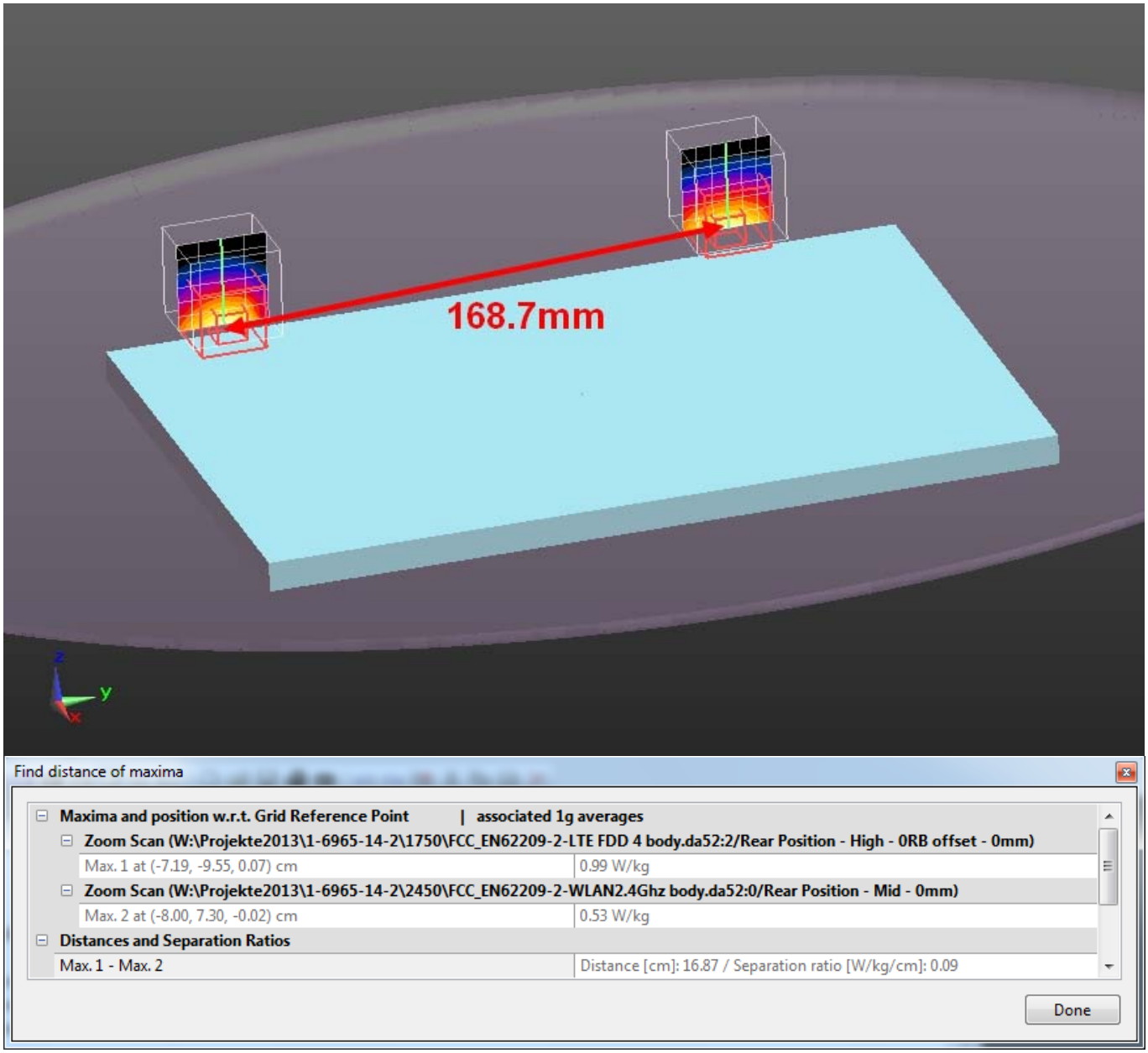

LTE FDD 7 + WLAN2450 rear 0mm

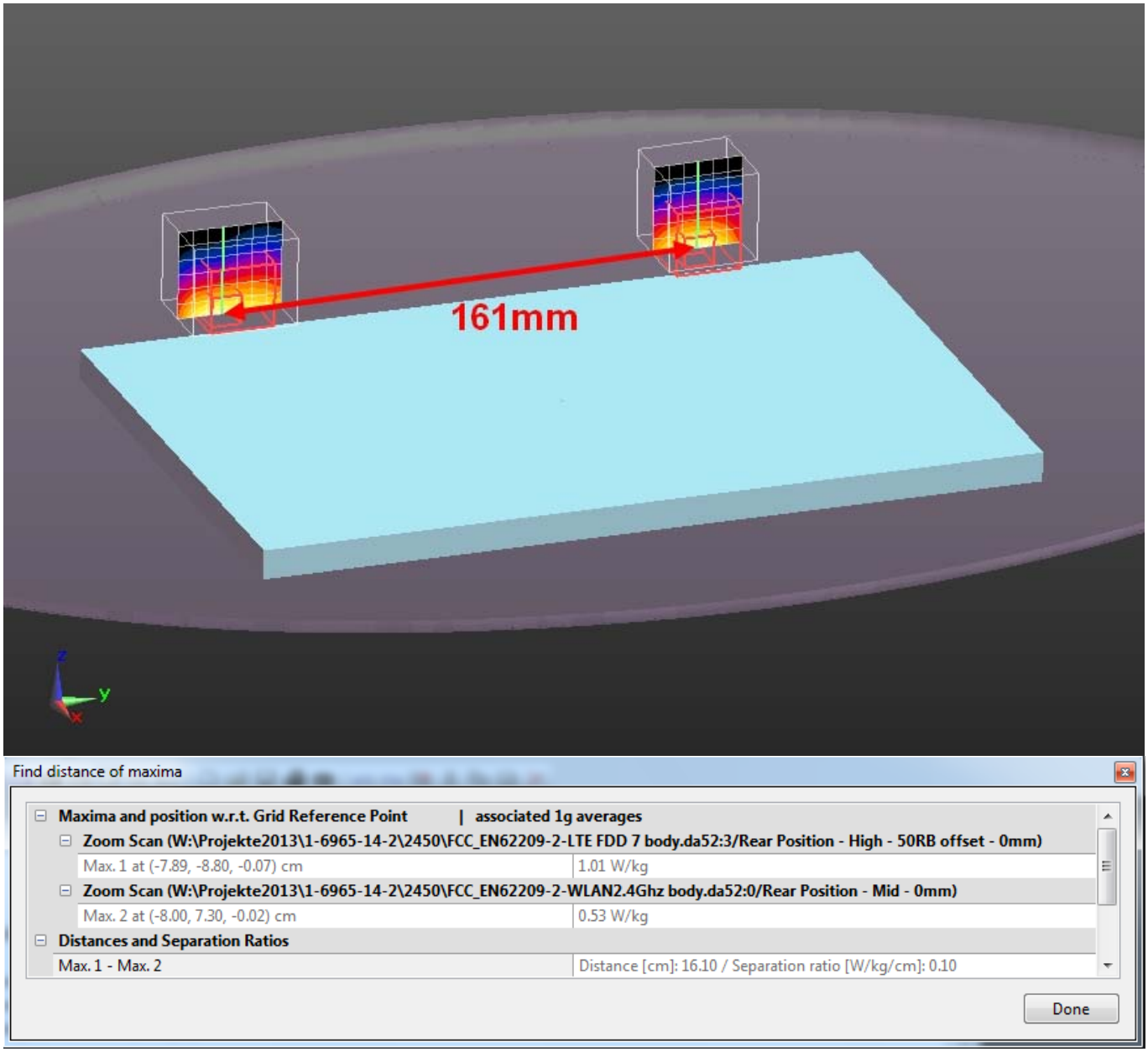

LTE FDD 13 + WLAN2450 rear 0mm

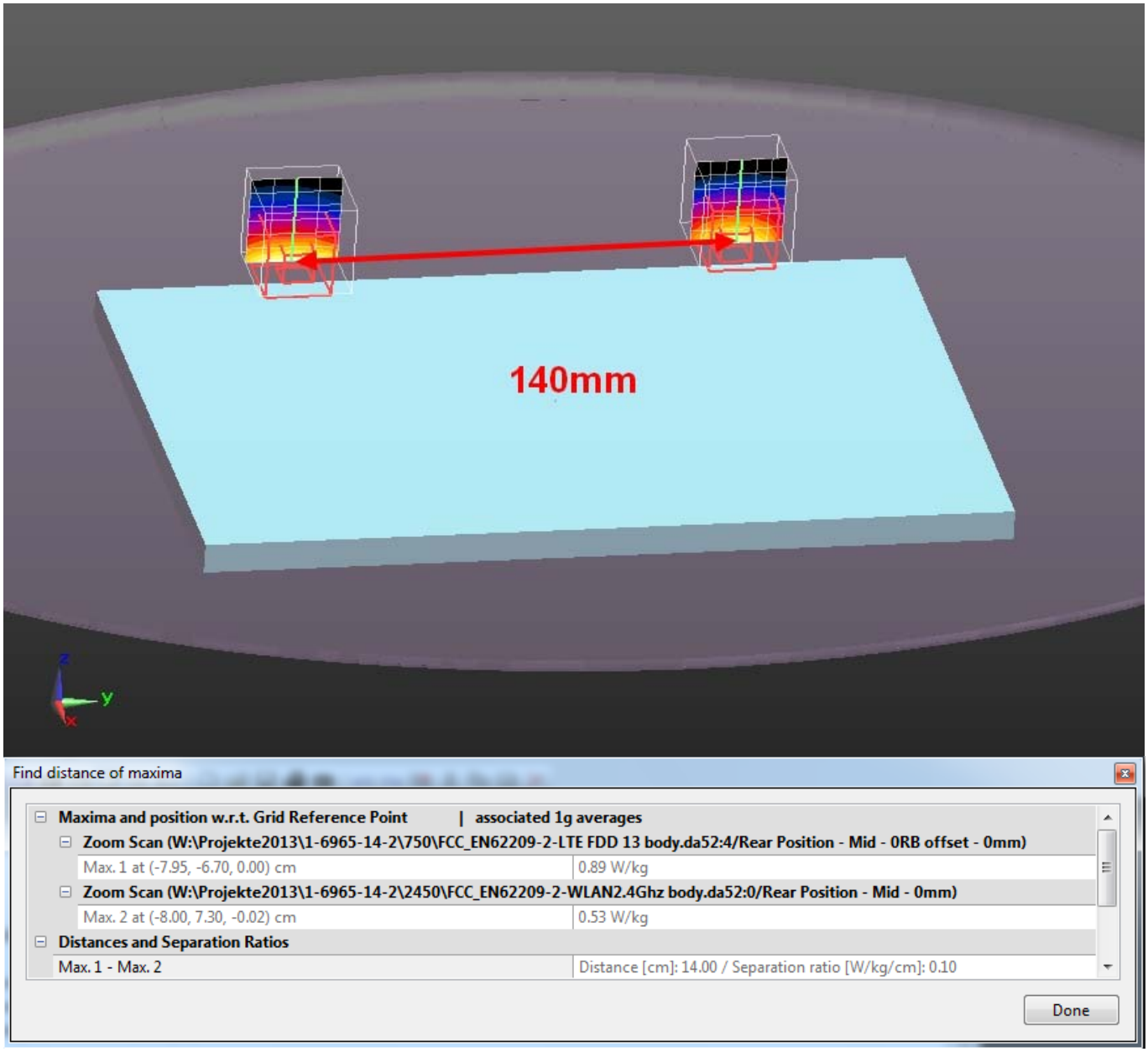

GSM850 + WLAN5GHz rear 0mm

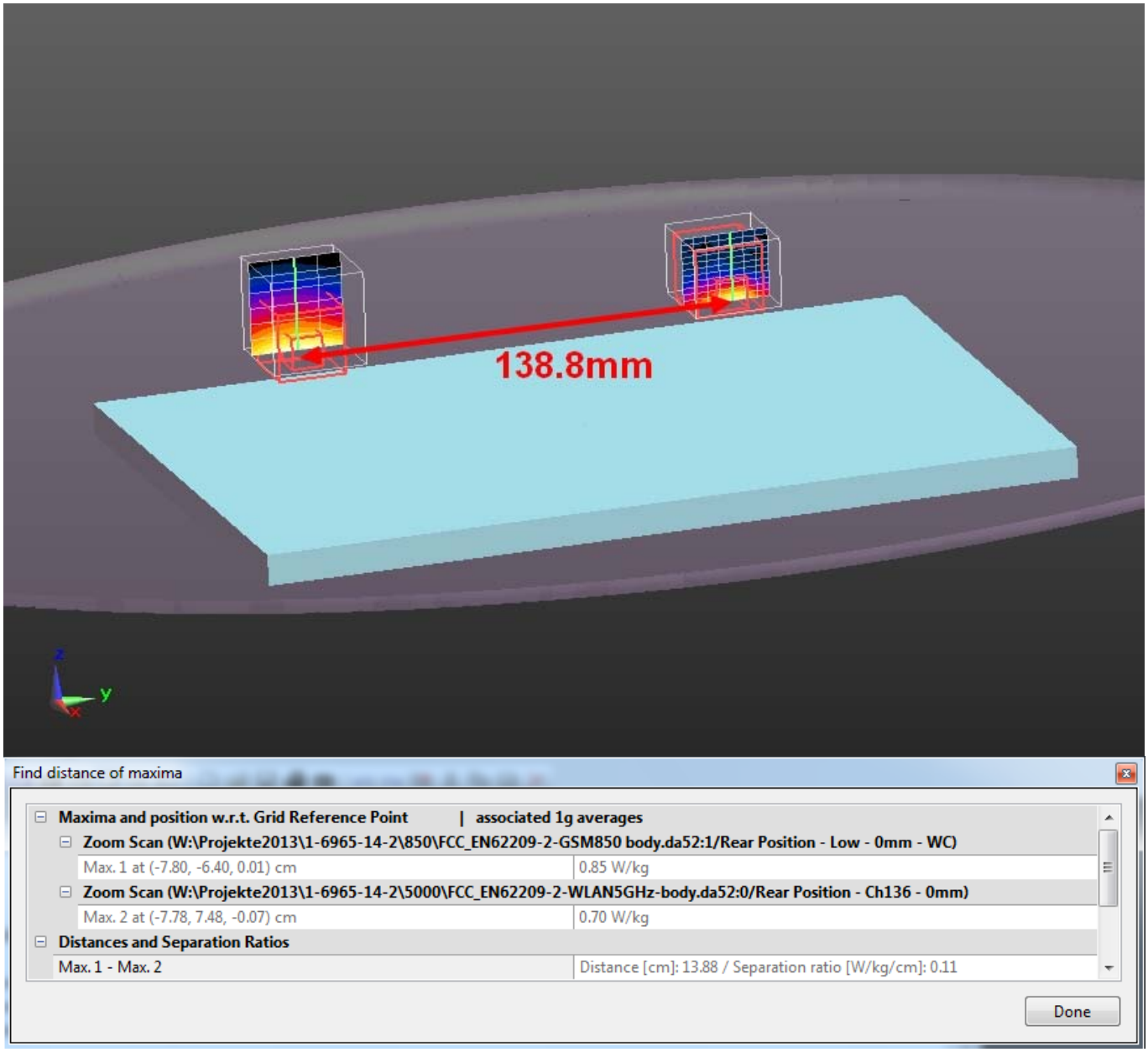

GSM1900 + WLAN5GHz rear 0mm

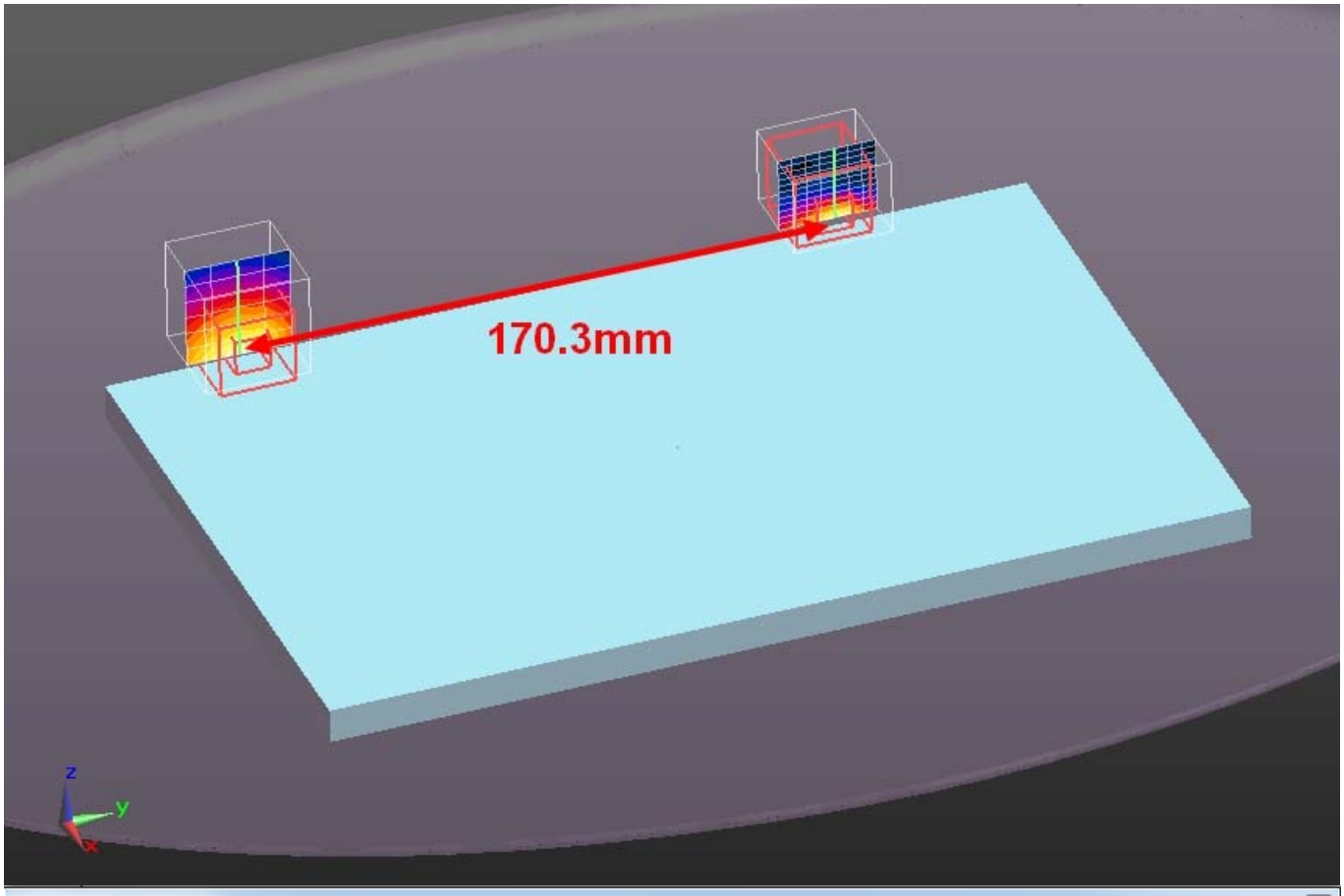

Find distance of maxima

Maxima and position w.r.t. Grid Reference Point	**associated 1g averages**
Zoom Scan (W:\Projekte2013\1-6965-14-2\1900\FCC_EN62209-2-GSM1900 body.da52:1/Rear Position - Low - 0mm)	
Max. 1 at (-7.50, -9.55, -0.03) cm	0.82 W/kg
Zoom Scan (W:\Projekte2013\1-6965-14-2\5000\FCC_EN62209-2-WLAN5GHz-body.da52:0/Rear Position - Ch136 - 0mm)	
Max. 2 at (-7.78, 7.48, -0.07) cm	0.70 W/kg
Distances and Separation Ratios	
Max. 1 - Max. 2	Distance [cm]: 17.03 / Separation ratio [W/kg/cm]: 0.09

Done

UMTS FDDII + WLAN5GHz rear 0mm

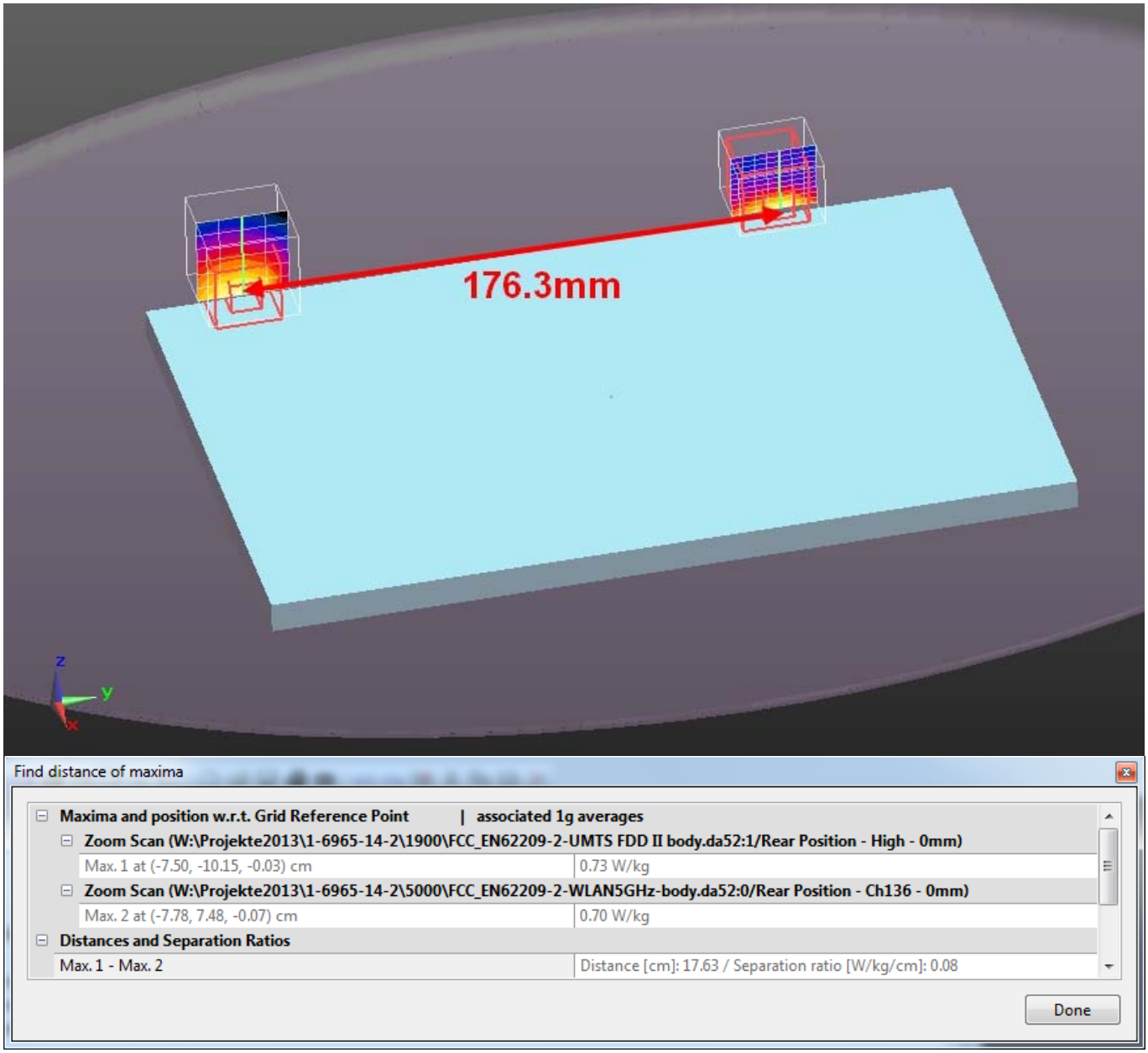

UMTS FDDV + WLAN5GHz rear 0mm

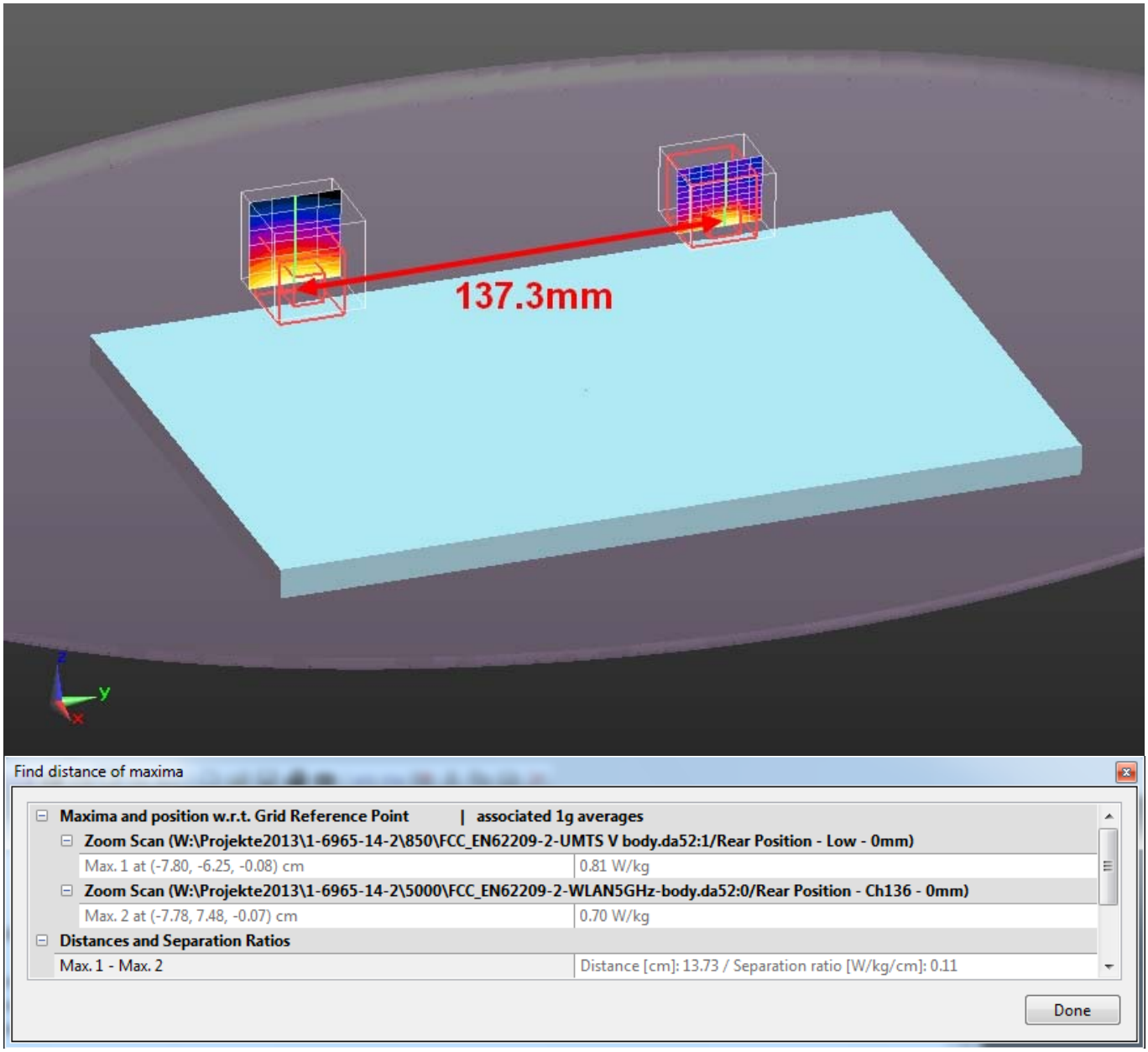

CDMA2000 BC0 + WLAN5GHz rear 0mm

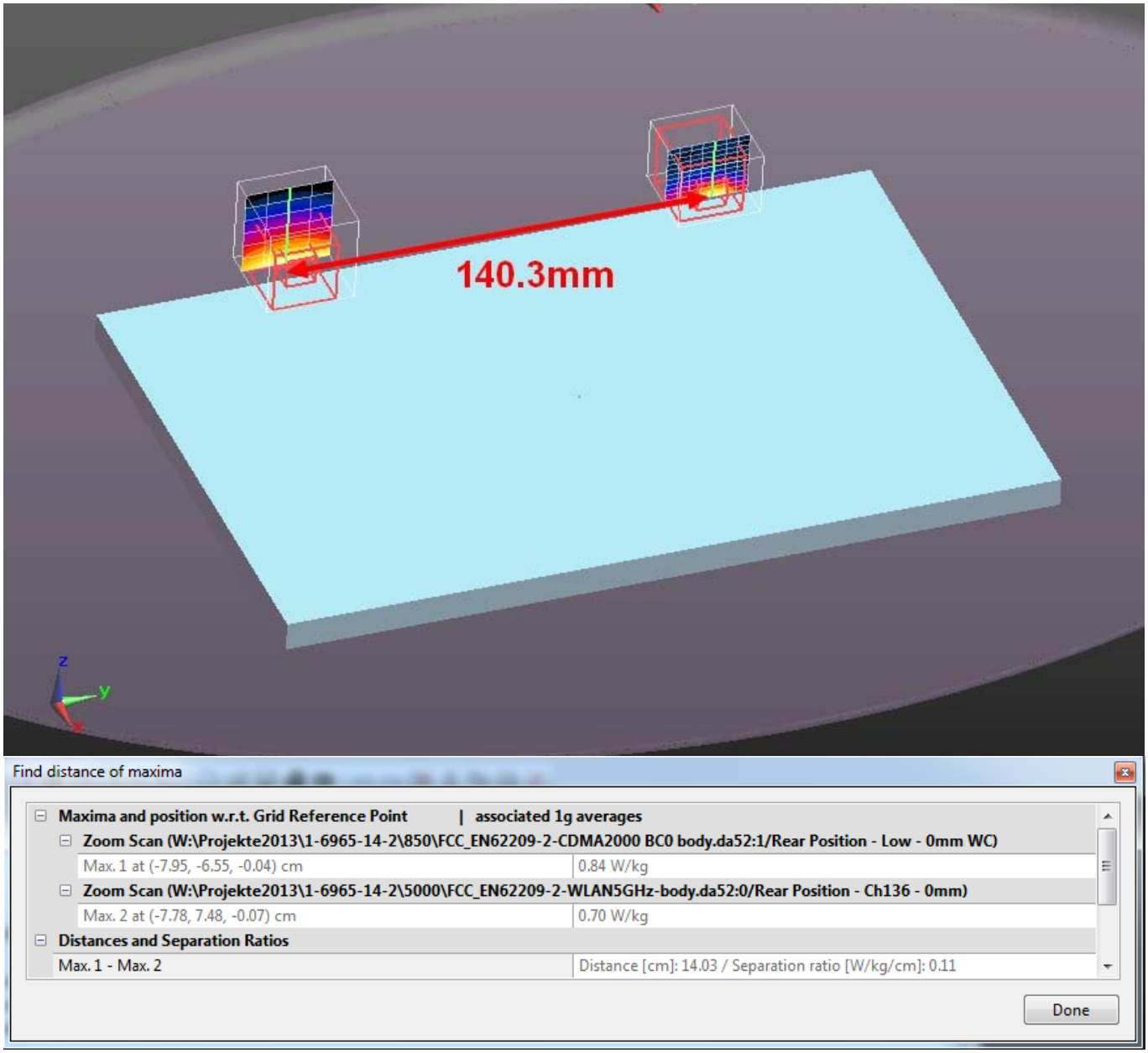

CDMA2000 BC1 + WLAN5GHz rear 0mm

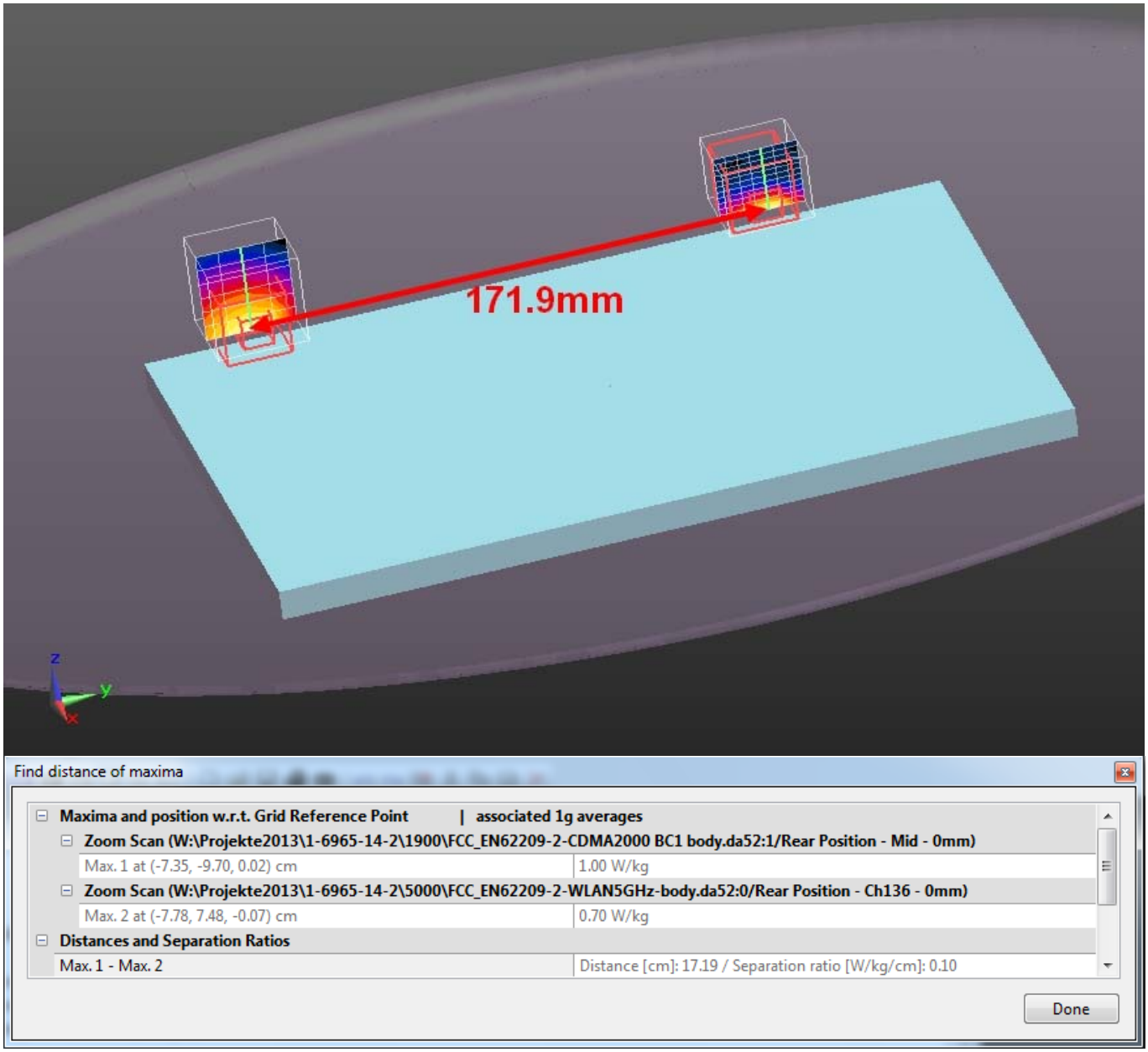

LTE FDD 2 + WLAN5GHz rear 0mm

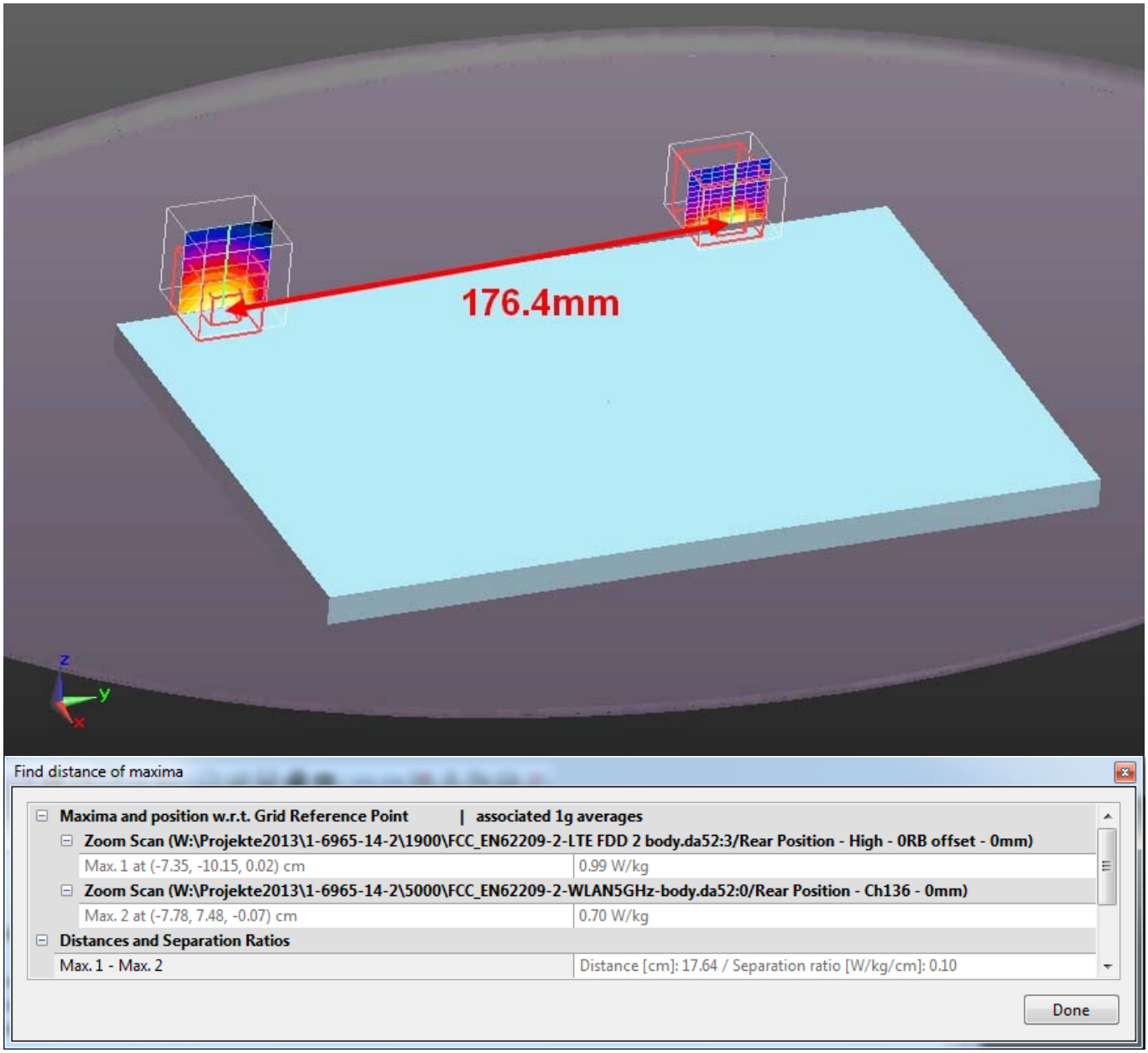

LTE FDD 4 + WLAN5GHz rear 0mm

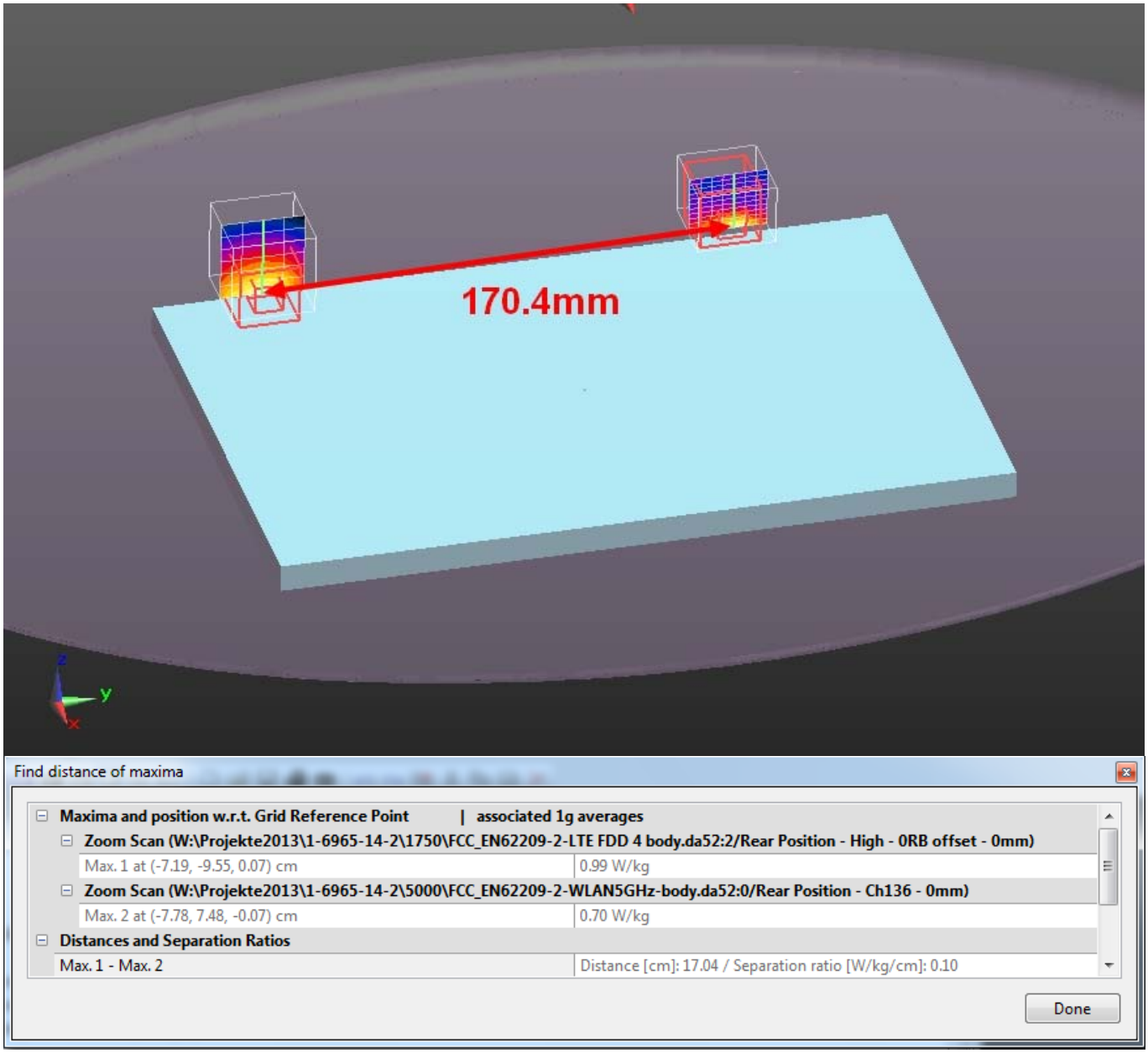

LTE FDD 7 + WLAN5GHz rear 0mm

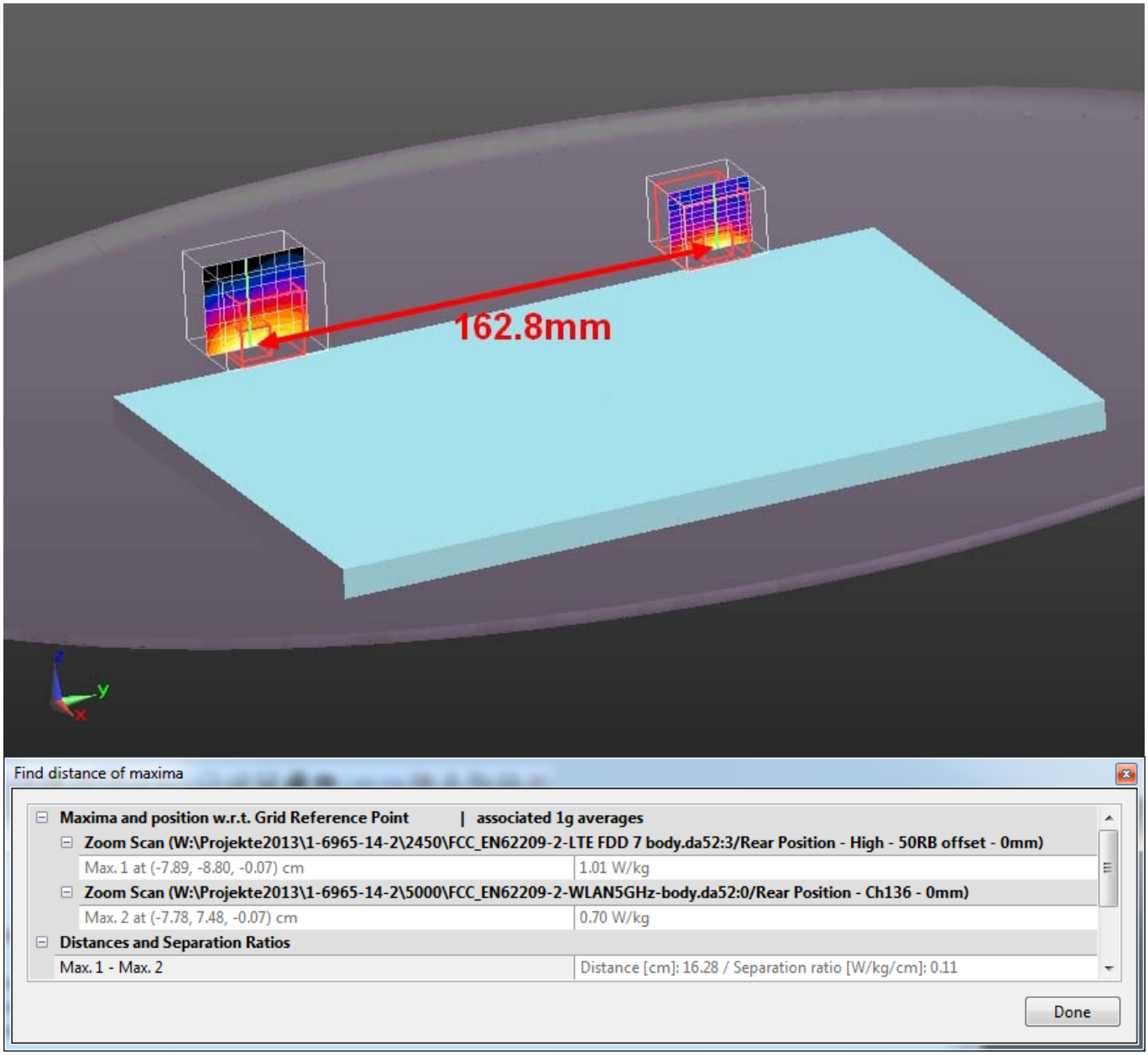

LTE FDD 13 + WLAN5GHz rear 0mm

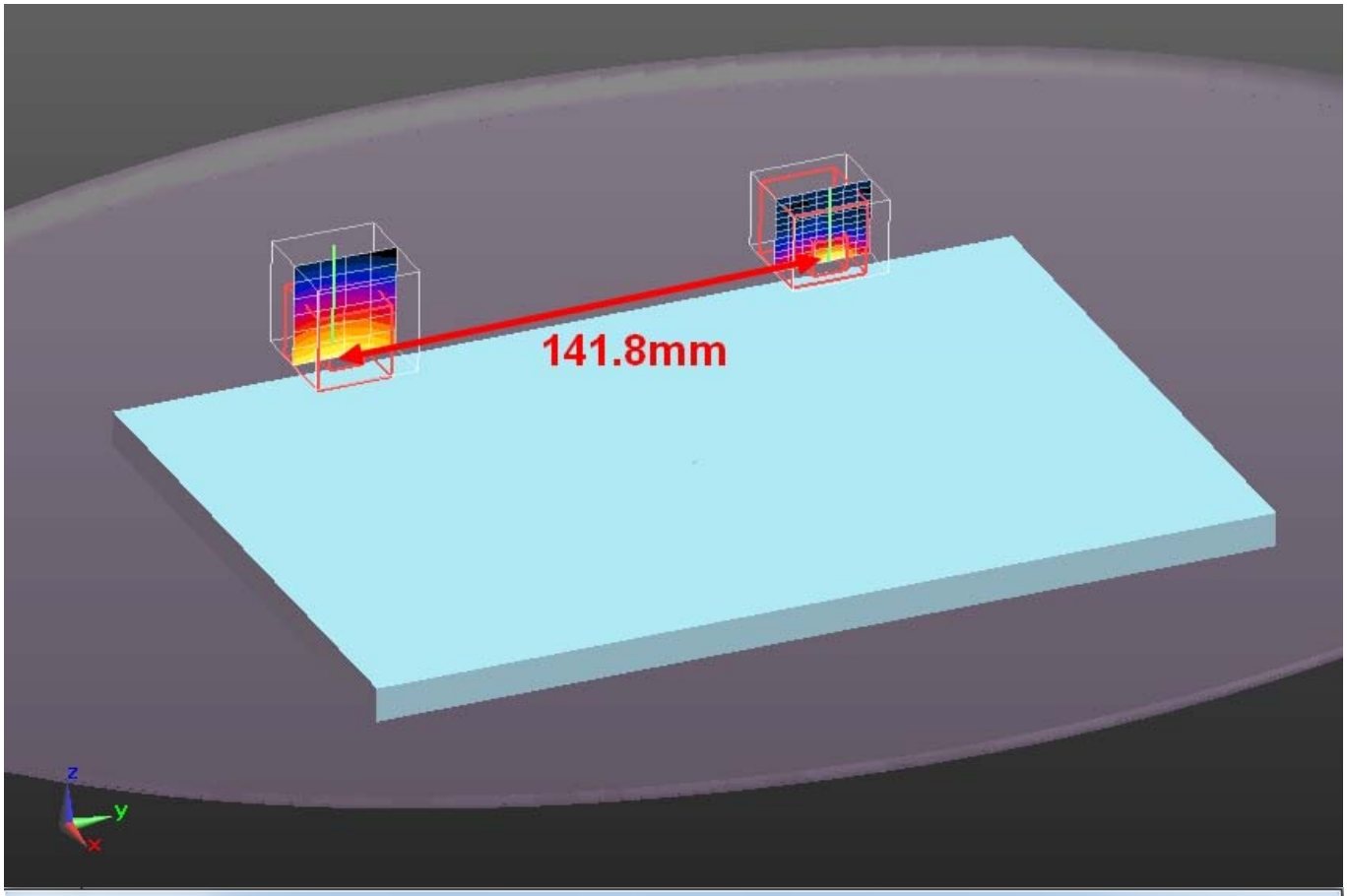

Find distance of maxima

Maxima and position w.r.t. Grid Reference Point	**associated 1g averages**
Zoom Scan (W:\Projekte2013\1-6965-14-2\750\FCC_EN62209-2-LTE FDD 13 body.da52:4/Rear Position - Mid - 0RB offset - 0mm)	
Max. 1 at (-7.95, -6.70, 0.00) cm	0.89 W/kg
Zoom Scan (W:\Projekte2013\1-6965-14-2\5000\FCC_EN62209-2-WLAN5GHz-body.da52:0/Rear Position - Ch136 - 0mm)	
Max. 2 at (-7.78, 7.48, -0.07) cm	0.70 W/kg
Distances and Separation Ratios	
Max. 1 - Max. 2	Distance [cm]: 14.18 / Separation ratio [W/kg/cm]: 0.11

Done

9 Test equipment and ancillaries used for tests

To simplify the identification of the test equipment and/or ancillaries which were used, the reporting of the relevant test cases only refer to the test item number as specified in the table below.

Equipment	Type	Manufacturer	Serial No.	Last Calibration	Frequency (months)
Dosimetric E-Field Probe	ES3DV3	Schmid & Partner Engineering AG	3320	June 04, 2013	12
Dosimetric E-Field Probe	EX3DV4	Schmid & Partner Engineering AG	3944	August 02, 2013	12
750 MHz System Validation Dipole	D750V3	Schmid & Partner Engineering AG	1041	August 15, 2013	24
835 MHz System Validation Dipole	D835V2	Schmid & Partner Engineering AG	4d153	June 06, 2013	24
1750 MHz System Validation Dipole	D1750V2	Schmid & Partner Engineering AG	1093	June 06, 2013	24
1900 MHz System Validation Dipole	D1900V2	Schmid & Partner Engineering AG	5d009	May 15, 2013	24
2450 MHz System Validation Dipole	D2450V2	Schmid & Partner Engineering AG	710	August 13, 2012	24
2600 MHz System Validation Dipole	D2600V2	Schmid & Partner Engineering AG	1040	August 15, 2013	24
5 GHz System Validation Dipole	D5GHzV2	Schmid & Partner Engineering AG	1055	August 19, 2013	24
Data acquisition electronics	DAE3V1	Schmid & Partner Engineering AG	413	January 16, 2014	12
Software	DASY52 52.8.7	Schmid & Partner Engineering AG	---	N/A	--
Phantom ELI 4.0	QDOVA001BA	Schmid & Partner Engineering AG	1046	N/A	--
Universal Radio Communication Tester	CMU 200	Rohde & Schwarz	106826	January 27, 2014	24
Universal Radio Communication Tester	CMW500	Rohde & Schwarz	102375	January 16, 2013	24
Network Analyser 300 kHz to 6 GHz	8753ES	Hewlett Packard)*	US39174436	February 24, 2012	24
Dielectric Probe Kit	85070C	Hewlett Packard	US99360146	N/A	12
Signal Generator	8671B	Hewlett Packard	2823A00656	January 15, 2013	24
Amplifier	25S1G4 (25 Watt)	Amplifier Reasearch	20452	N/A	--
Power Meter	NRP	Rohde & Schwarz	101367	January 21, 2014	24
Power Meter Sensor	NRP Z22	Rohde & Schwarz	100227	January 21, 2014	12
Power Meter Sensor	NRP Z22	Rohde & Schwarz	100234	January 21, 2014	12
Directional Coupler	778D	Hewlett Packard	19171	January 21, 2014	12

)* : Network analyzer probe calibration against air, distilled water and a shorting block performed before measuring liquid parameters.

10 Observations

No observations exceeding those reported with the single test cases have been made.

Annex A: System performance check

Date/Time: 19.03.2014 10:14:48

SystemPerformanceCheck-D750 body 2014-03-19

DUT: Dipole 750 MHz; Type: D750V3; Serial: 1041
Communication System: UID 0, CW (0); Communication System Band: D750 (750.0 MHz); Frequency: 750 MHz; Communication System PAR: 0 dB; PMF: 1
Medium parameters used: f = 750 MHz; σ = 0.957 S/m; ε_r = 54.355; ρ = 1000 kg/m^3
Phantom section: Flat Section
Measurement Standard: DASY5
DASY5 Configuration:
- Probe: ES3DV3 - SN3320; ConvF(6.36, 6.36, 6.36); Calibrated: 04.06.2013;
- Sensor-Surface: 4mm (Mechanical Surface Detection), z = 2.0, 32.0
- Electronics: DAE3 Sn413; Calibrated: 16.01.2014
- Phantom: ELI 4.0; Type: QDOVA001BA; Serial: 1046
- DASY52 52.8.7(1137); SEMCAD X 14.6.10(7164)

MSL750/d=15mm, Pin=1000 mW, dist=4.0mm/Area Scan (51x51x1):

Interpolated grid: dx=1.500 mm, dy=1.500 mm
Maximum value of SAR (interpolated) = 9.93 W/kg

MSL750/d=15mm, Pin=1000 mW, dist=4.0mm/Zoom Scan (7x7x7)/Cube 0:

Measurement grid: dx=5mm, dy=5mm, dz=5mm
Reference Value = 102.5 V/m; Power Drift = -0.05 dB
Peak SAR (extrapolated) = 13.1 W/kg
SAR(1 g) = 8.84 W/kg; SAR(10 g) = 5.87 W/kg
Maximum value of SAR (measured) = 9.44 W/kg

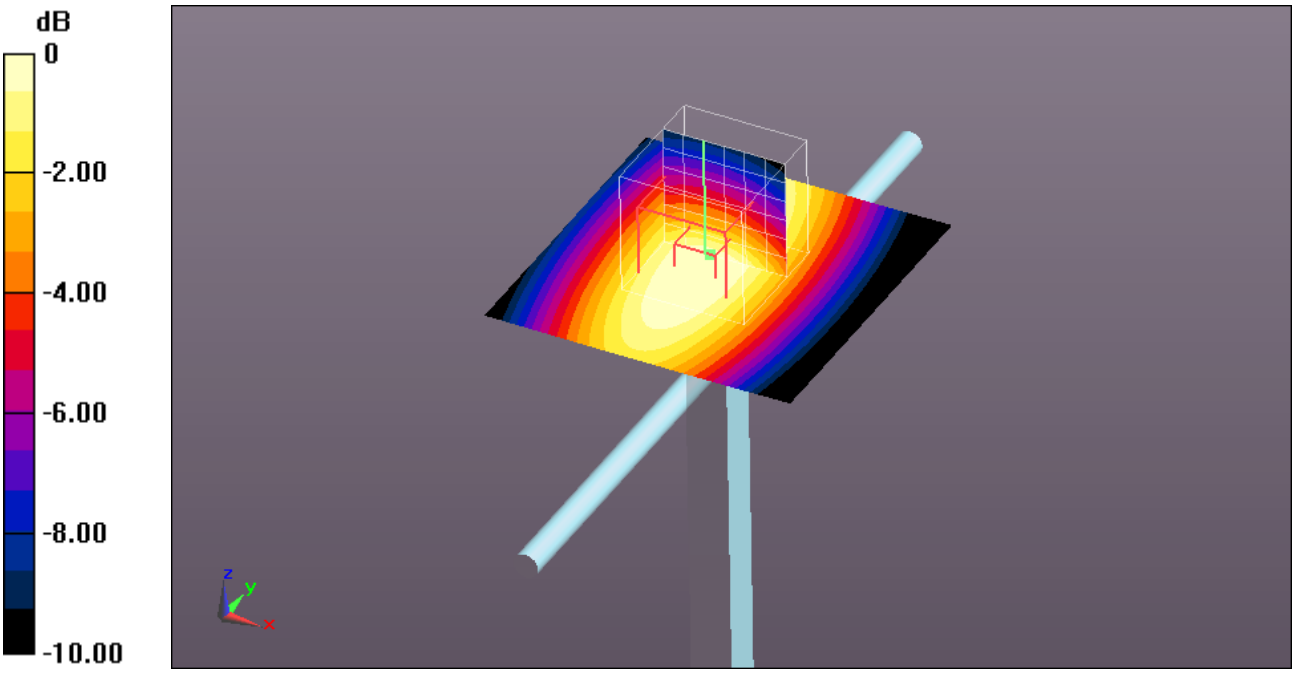

0 dB = 9.44 W/kg = 9.75 dBW/kg

Additional information:
ambient temperature: 22.2°C; liquid temperature: 21.8°C

Date/Time: 12.03.2014 22:47:56

SystemPerformanceCheck-D835 body 2014-03-12

DUT: Dipole 835 MHz; Type: D835V2; Serial: 4d153
Communication System: UID 0, CW (0); Communication System Band: D835 (835.0 MHz); Frequency: 835 MHz; Communication System PAR: 0 dB; PMF: 1
Medium parameters used: f = 835 MHz; σ = 0.991 S/m; ε_r = 53.92; ρ = 1000 kg/m^3
Phantom section: Flat Section
Measurement Standard: DASY5
DASY5 Configuration:
- Probe: ES3DV3 - SN3320; ConvF(6.29, 6.29, 6.29); Calibrated: 04.06.2013;
- Sensor-Surface: 4mm (Mechanical Surface Detection), z = 2.0, 32.0
- Electronics: DAE3 Sn413; Calibrated: 16.01.2014
- Phantom: ELI 4.0; Type: QDOVA001BA; Serial: 1046
- DASY52 52.8.7(1137); SEMCAD X 14.6.10(7164)

MSL835/d=10mm, Pin=1000 mW, dist=4.0mm/Area Scan (51x51x1):

Interpolated grid: dx=1.500 mm, dy=1.500 mm
Maximum value of SAR (interpolated) = 10.5 W/kg

MSL835/d=10mm, Pin=1000 mW, dist=4.0mm/Zoom Scan (7x7x7)/Cube 0:

Measurement grid: dx=5mm, dy=5mm, dz=5mm
Reference Value = 104.6 V/m; Power Drift = 0.01 dB
Peak SAR (extrapolated) = 14.7 W/kg
SAR(1 g) = 9.97 W/kg; SAR(10 g) = 6.56 W/kg
Maximum value of SAR (measured) = 10.8 W/kg

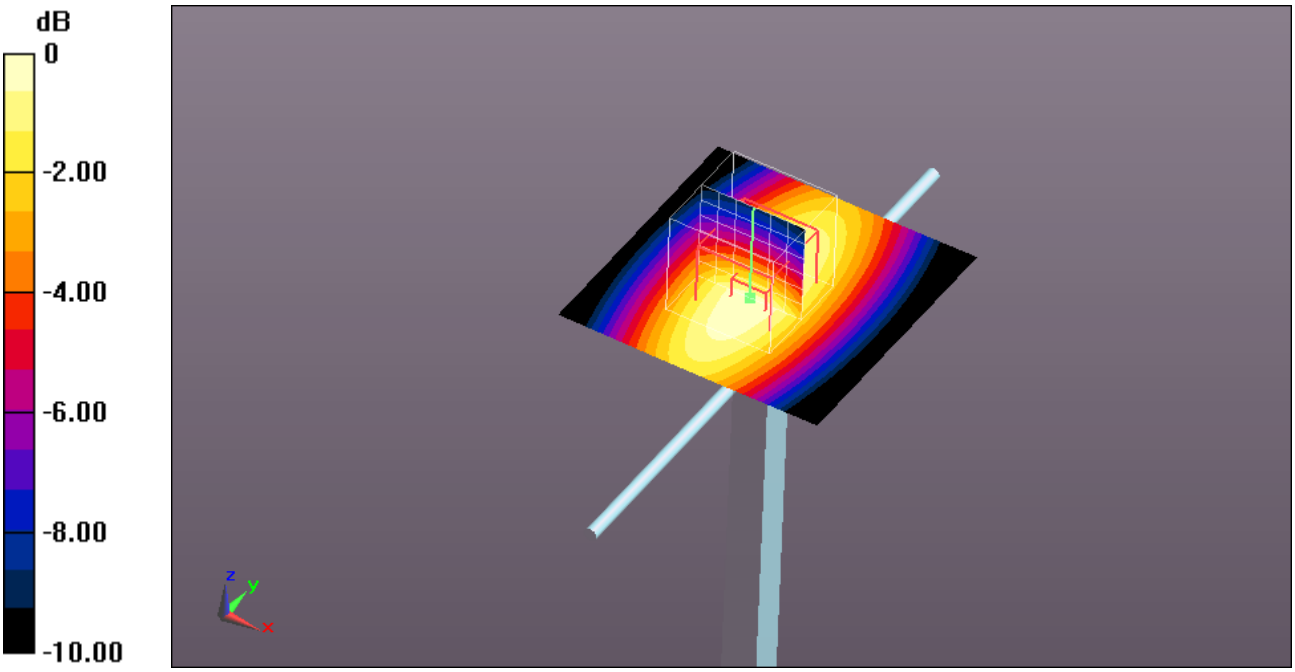

0 dB = 10.8 W/kg = 10.33 dBW/kg

Additional information:
ambient temperature: 22.5°C; liquid temperature: 22.0°C

Date/Time: 13.03.2014 10:02:31

SystemPerformanceCheck-D835 body 2014-03-13

DUT: Dipole 835 MHz; Type: D835V2; Serial: 4d153
Communication System: UID 0, CW (0); Communication System Band: D835 (835.0 MHz); Frequency: 835 MHz; Communication System PAR: 0 dB; PMF: 1
Medium parameters used: f = 835 MHz; σ = 0.991 S/m; ε_r = 53.92; ρ = 1000 kg/m^3
Phantom section: Flat Section
Measurement Standard: DASY5
DASY5 Configuration:
- Probe: ES3DV3 - SN3320; ConvF(6.29, 6.29, 6.29); Calibrated: 04.06.2013;
- Sensor-Surface: 4mm (Mechanical Surface Detection), z = 2.0, 32.0
- Electronics: DAE3 Sn413; Calibrated: 16.01.2014
- Phantom: ELI 4.0; Type: QDOVA001BA; Serial: 1046
- DASY52 52.8.7(1137); SEMCAD X 14.6.10(7164)

MSL835/d=10mm, Pin=1000 mW, dist=4.0mm/Area Scan (51x51x1):

Interpolated grid: dx=1.500 mm, dy=1.500 mm
Maximum value of SAR (interpolated) = 9.94 W/kg

MSL835/d=10mm, Pin=1000 mW, dist=4.0mm/Zoom Scan (7x7x7)/Cube 0:

Measurement grid: dx=5mm, dy=5mm, dz=5mm
Reference Value = 102.2 V/m; Power Drift = 0.04 dB
Peak SAR (extrapolated) = 14.0 W/kg
SAR(1 g) = 9.49 W/kg; SAR(10 g) = 6.25 W/kg
Maximum value of SAR (measured) = 10.3 W/kg

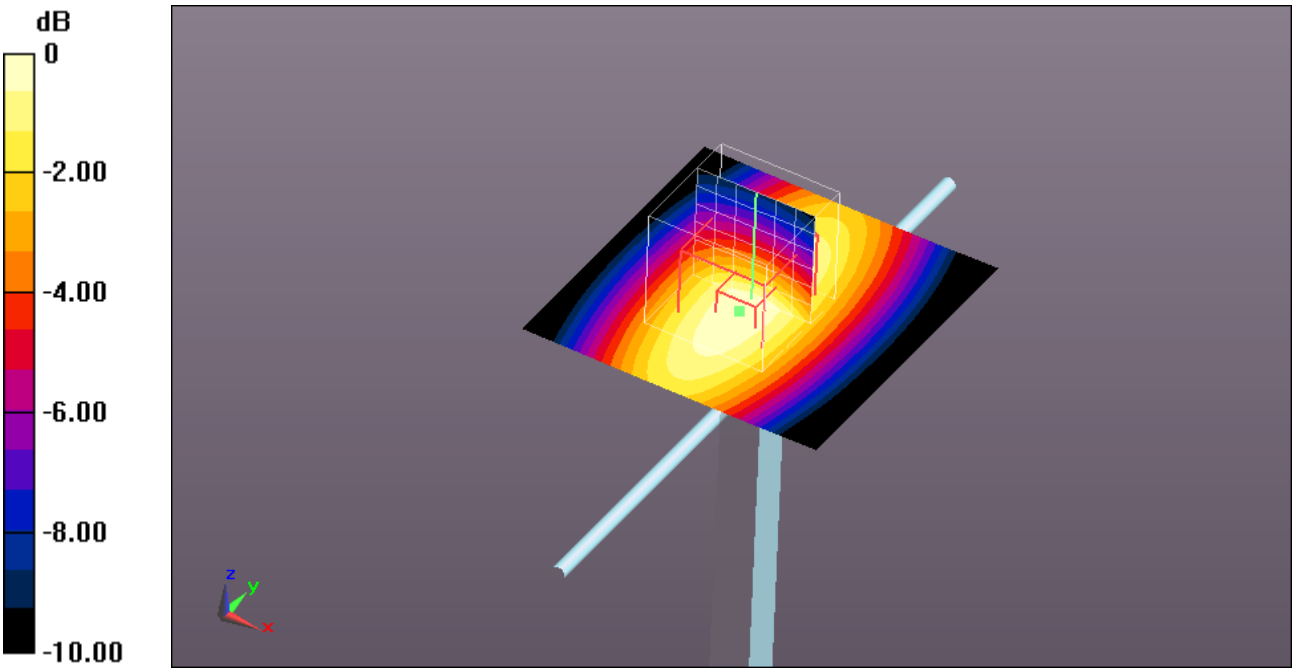

0 dB = 10.3 W/kg = 10.13 dBW/kg

Additional information:
ambient temperature: 22.2°C; liquid temperature: 21.6°C

Date/Time: 15.03.2014 22:18:39

SystemPerformanceCheck-D1750 body 2014-03-15

DUT: Dipole 1750 MHz; Type: D1750V2; Serial: 1093
Communication System: UID 0, CW (0); Communication System Band: D1750 (1750.0 MHz); Frequency: 1750 MHz; Communication System PAR: 0 dB; PMF: 1
Medium parameters used: f = 1750 MHz; σ = 1.494 S/m; ε_r = 52.5; ρ = 1000 kg/m^3
Phantom section: Flat Section
Measurement Standard: DASY5
DASY5 Configuration:
- Probe: ES3DV3 - SN3320; ConvF(5.04, 5.04, 5.04); Calibrated: 04.06.2013;
- Sensor-Surface: 4mm (Mechanical Surface Detection), z = 2.0, 32.0
- Electronics: DAE3 Sn413; Calibrated: 16.01.2014
- Phantom: ELI 4.0; Type: QDOVA001BA; Serial: 1046
- DASY52 52.8.7(1137); SEMCAD X 14.6.10(7164)

MSL1750/d=10mm, Pin=1000mW/Area Scan (51x51x1): Interpolated grid: dx=1.500 mm, dy=1.500 mm
Maximum value of SAR (interpolated) = 48.7 W/kg

MSL1750/d=10mm, Pin=1000mW/Zoom Scan (7x7x7)/Cube 0: Measurement grid: dx=5mm, dy=5mm, dz=5mm
Reference Value = 165.7 V/m; Power Drift = 0.12 dB
Peak SAR (extrapolated) = 65.2 W/kg
SAR(1 g) = 36.6 W/kg; SAR(10 g) = 19.6 W/kg
Maximum value of SAR (measured) = 41.0 W/kg

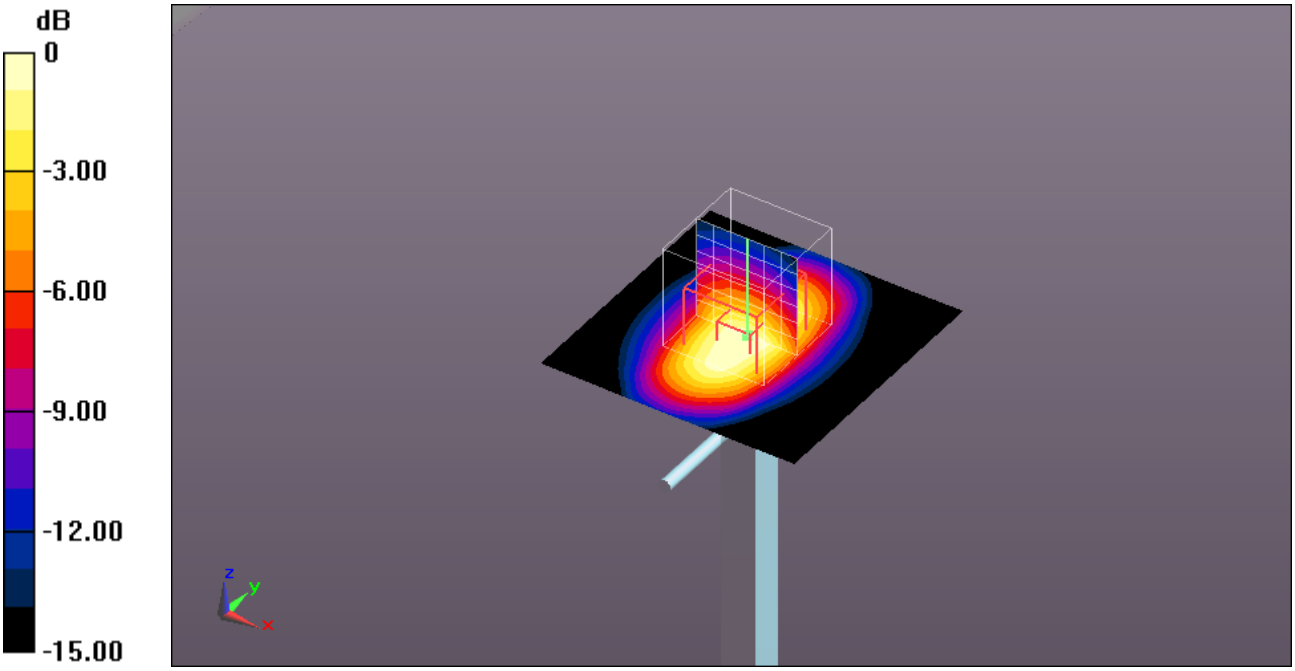

0 dB = 41.0 W/kg = 16.13 dBW/kg

Additional information:
ambient temperature: 22.3°C; liquid temperature: 21.7°C

Date/Time: 13.03.2014 10:42:29

SystemPerformanceCheck-D1900 body 2014-03-13

DUT: Dipole 1900 MHz; Type: D1900V2; Serial: 5d009

Communication System: UID 0, CW (0); Communication System Band: D1900 (1900.0 MHz); Frequency: 1900 MHz; Communication System PAR: 0 dB; PMF: 1

Medium parameters used: f = 1900 MHz; σ = 1.506 S/m; ε_r = 52.538; ρ = 1000 kg/m^3

Phantom section: Flat Section

Measurement Standard: DASY5

DASY5 Configuration:

- Probe: ES3DV3 - SN3320; ConvF(4.78, 4.78, 4.78); Calibrated: 04.06.2013;
- Sensor-Surface: 4mm (Mechanical Surface Detection), z = 2.0, 32.0
- Electronics: DAE3 Sn413; Calibrated: 16.01.2014
- Phantom: ELI 4.0; Type: QDOVA001BA; Serial: 1046
- DASY52 52.8.7(1137); SEMCAD X 14.6.10(7164)

MSL1900/d=10mm, Pin=1000 mW, dist=4.0mm/Area Scan (51x51x1):

Interpolated grid: dx=1.500 mm, dy=1.500 mm

Maximum value of SAR (interpolated) = 54.6 W/kg

MSL1900/d=10mm, Pin=1000 mW, dist=4.0mm/Zoom Scan (7x7x7)/Cube 0:

Measurement grid: dx=5mm, dy=5mm, dz=5mm

Reference Value = 173.3 V/m; Power Drift = 0.07 dB

Peak SAR (extrapolated) = 70.8 W/kg

SAR(1 g) = 39.6 W/kg; SAR(10 g) = 20.8 W/kg

Maximum value of SAR (measured) = 44.9 W/kg

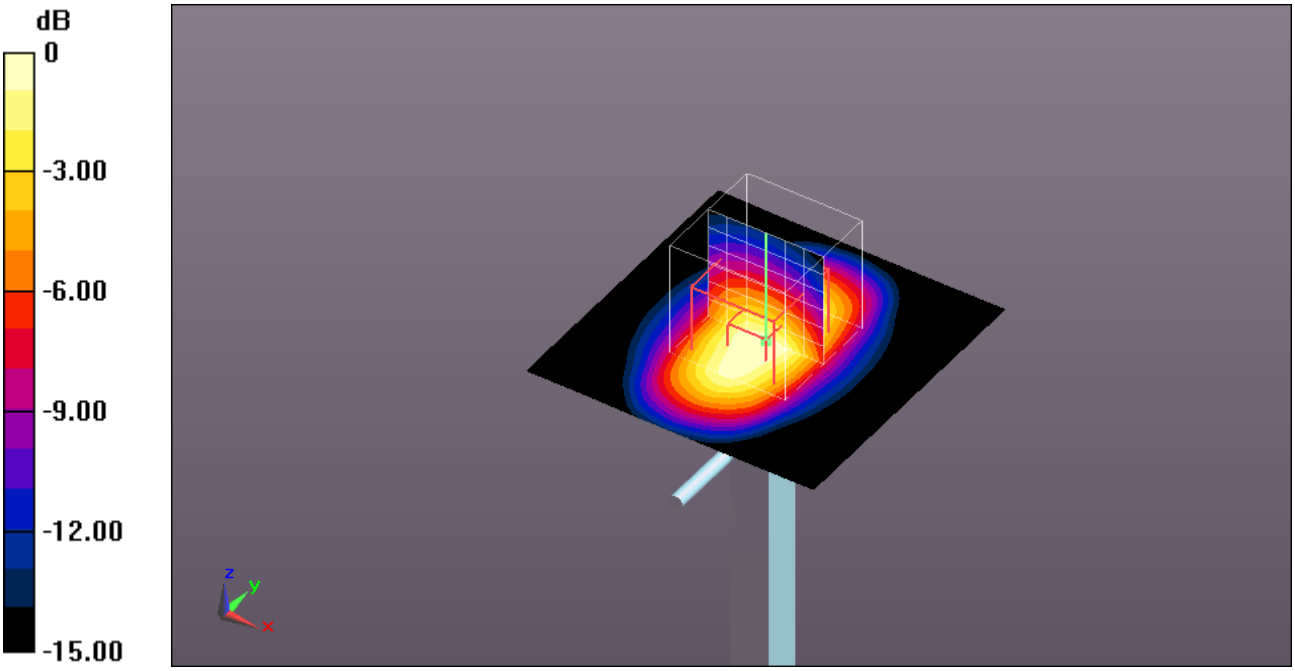

0 dB = 44.9 W/kg = 16.52 dBW/kg

Additional information:

ambient temperature: 22.2°C; liquid temperature: 21.8°C

Date/Time: 14.03.2014 16:43:34

SystemPerformanceCheck-D1900 body 2014-03-14

DUT: Dipole 1900 MHz; Type: D1900V2; Serial: 5d009
Communication System: UID 0, CW (0); Communication System Band: D1900 (1900.0 MHz); Frequency: 1900 MHz; Communication System PAR: 0 dB; PMF: 1
Medium parameters used: f = 1900 MHz; σ = 1.506 S/m; ε_r = 52.538; ρ = 1000 kg/m^3
Phantom section: Flat Section
Measurement Standard: DASY5
DASY5 Configuration:
- Probe: ES3DV3 - SN3320; ConvF(4.78, 4.78, 4.78); Calibrated: 04.06.2013;
- Sensor-Surface: 4mm (Mechanical Surface Detection), z = 2.0, 32.0
- Electronics: DAE3 Sn413; Calibrated: 16.01.2014
- Phantom: ELI 4.0; Type: QDOVA001BA; Serial: 1046
- DASY52 52.8.7(1137); SEMCAD X 14.6.10(7164)

MSL1900/d=10mm, Pin=1000 mW, dist=4.0mm/Area Scan (51x51x1):

Interpolated grid: dx=1.500 mm, dy=1.500 mm
Maximum value of SAR (interpolated) = 55.0 W/kg

MSL1900/d=10mm, Pin=1000 mW, dist=4.0mm/Zoom Scan (7x7x7)/Cube 0:

Measurement grid: dx=5mm, dy=5mm, dz=5mm
Reference Value = 172.7 V/m; Power Drift = -0.03 dB
Peak SAR (extrapolated) = 68.5 W/kg
SAR(1 g) = 38.2 W/kg; SAR(10 g) = 20.1 W/kg
Maximum value of SAR (measured) = 43.0 W/kg

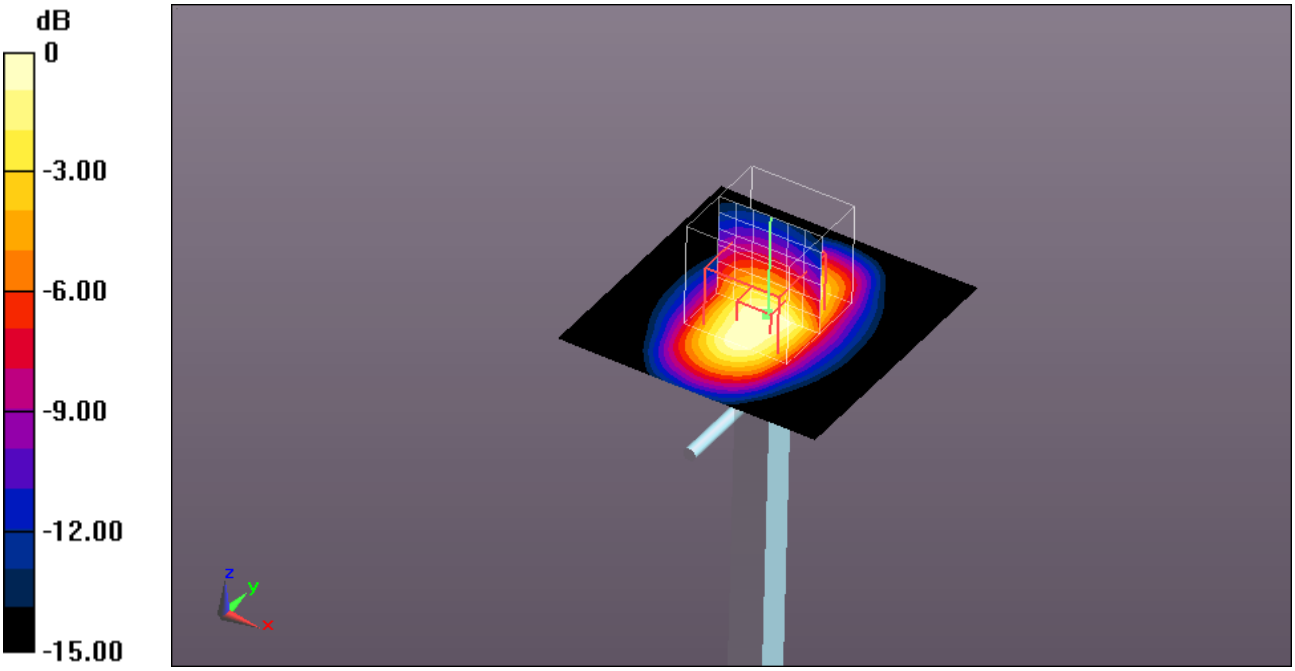

0 dB = 43.0 W/kg = 16.33 dBW/kg

Additional information:
ambient temperature: 22.1°C; liquid temperature: 21.5°C

Date/Time: 17.03.2014 23:02:38

SystemPerformanceCheck-D2450 body 2014-03-17

DUT: Dipole 2450 MHz; Type: D2450V2; Serial: 710
Communication System: UID 0, CW (0); Communication System Band: D2450 (2450.0 MHz); Frequency: 2450 MHz; Communication System PAR: 0 dB; PMF: 1
Medium parameters used: f = 2450 MHz; σ = 1.982 S/m; ε_r = 51.691; ρ = 1000 kg/m^3
Phantom section: Flat Section
Measurement Standard: DASY5
DASY5 Configuration:
- Probe: ES3DV3 - SN3320; ConvF(4.36, 4.36, 4.36); Calibrated: 04.06.2013;
- Sensor-Surface: 4mm (Mechanical Surface Detection), Sensor-Surface: 2mm (Mechanical Surface Detection), z = 2.0, 32.0
- Electronics: DAE3 Sn413; Calibrated: 16.01.2014
- Phantom: ELI 4.0; Type: QDOVA001BA; Serial: 1046
- DASY52 52.8.7(1137); SEMCAD X 14.6.10(7164)

MSL2450/d=10mm, Pin=1000 mW, dist=4.0mm/Area Scan (81x81x1):

Interpolated grid: dx=1.000 mm, dy=1.000 mm
Maximum value of SAR (interpolated) = 61.8 W/kg

MSL2450/d=10mm, Pin=1000 mW, dist=4.0mm/Zoom Scan (7x7x7)/Cube 0:

Measurement grid: dx=5mm, dy=5mm, dz=5mm
Reference Value = 171.5 V/m; Power Drift = 0.10 dB
Peak SAR (extrapolated) = 114 W/kg
SAR(1 g) = 53.6 W/kg; SAR(10 g) = 24.8 W/kg
Maximum value of SAR (measured) = 82.0 W/kg

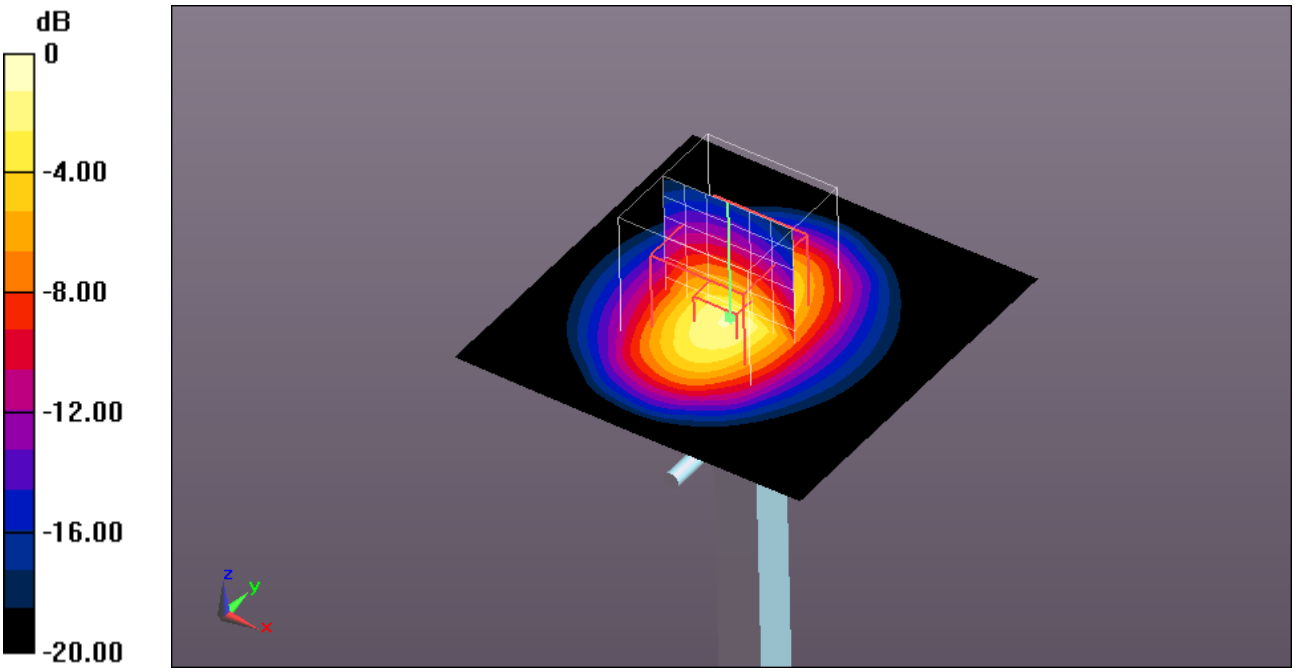

0 dB = 82.0 W/kg = 19.14 dBW/kg

Additional information:
ambient temperature: 22.5°C; liquid temperature: 21.9°C

Date/Time: 18.03.2014 05:41:43

SystemPerformanceCheck-D2600 body 2014-03-18

DUT: Dipole 2600 MHz; Type: D2600V2; Serial: 1040
Communication System: UID 0, CW (0); Communication System Band: D2600 (2600.0 MHz); Frequency: 2600 MHz; Communication System PAR: 0 dB; PMF: 1
Medium parameters used: f = 2600 MHz; σ = 2.142 S/m; ε_r = 51.146; ρ = 1000 kg/m^3
Phantom section: Flat Section
Measurement Standard: DASY5
DASY5 Configuration:
- Probe: EX3DV4 - SN3944; ConvF(7.27, 7.27, 7.27); Calibrated: 02.08.2013;
- Sensor-Surface: 2mm (Mechanical Surface Detection), z = 1.0, 31.0
- Electronics: DAE3 Sn413; Calibrated: 16.01.2014
- Phantom: ELI 4.0; Type: QDOVA001BA; Serial: 1046
- DASY52 52.8.7(1137); SEMCAD X 14.6.10(7164)

MSL2450_2600/d=10mm, Pin=1000 mW, dist=2.0mm/Area Scan (81x81x1):

Interpolated grid: dx=1.000 mm, dy=1.000 mm
Maximum value of SAR (interpolated) = 92.9 W/kg

MSL2450_2600/d=10mm, Pin=1000 mW, dist=2.0mm/Zoom Scan (7x7x7)/Cube 0: Measurement grid: dx=5mm, dy=5mm, dz=5mm

Reference Value = 208.7 V/m; Power Drift = -0.01 dB
Peak SAR (extrapolated) = 131 W/kg
SAR(1 g) = 60.2 W/kg; SAR(10 g) = 26.5 W/kg
Maximum value of SAR (measured) = 94.7 W/kg

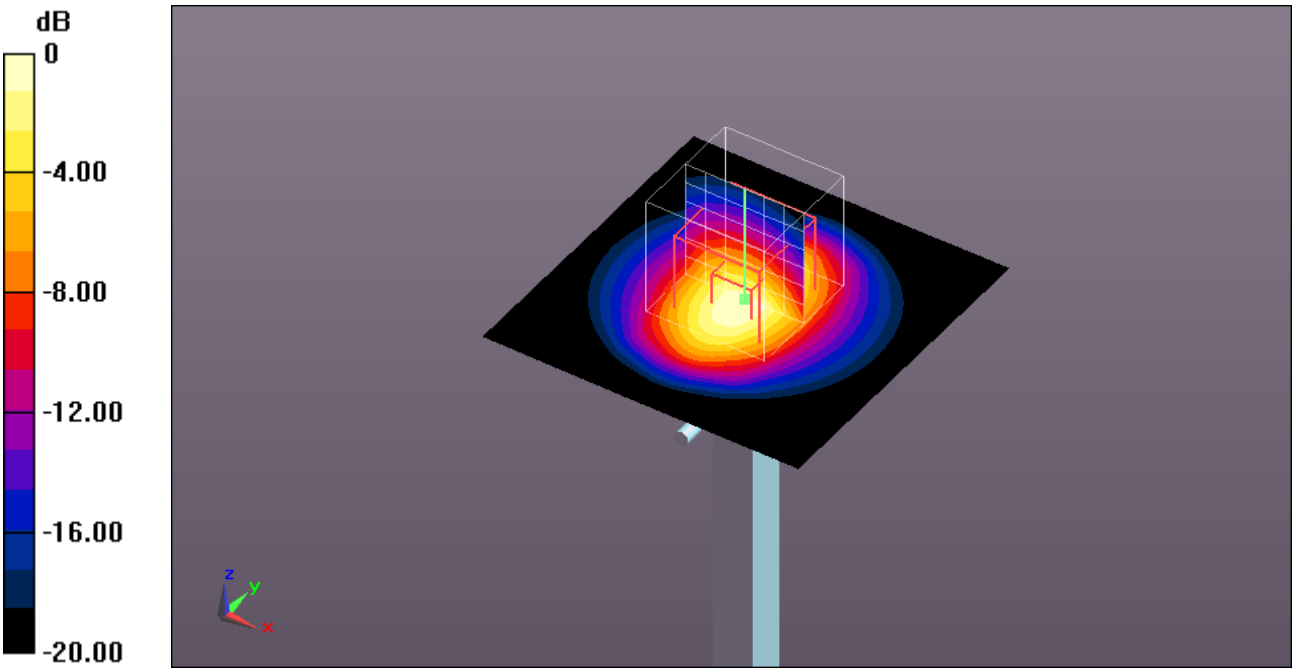

0 dB = 94.7 W/kg = 19.76 dBW/kg

Additional information:
ambient temperature: 22.6°C; liquid temperature: 22.0°C

Date/Time: 19.03.2014 15:39:15

SystemPerformanceCheck-D5GHz body 2014-2014-03-19

DUT: Dipole 5 GHz; Type: D5GHzV2; Serial: 1055
Communication System: UID 0, CW (0); Communication System Band: D5GHz (5000.0 - 6000.0 MHz);
Frequency: 5200 MHz; Communication System PAR: 0 dB; PMF: 1
Medium parameters used: f = 5200 MHz; σ = 5.217 S/m; ε_r = 48.385; ρ = 1000 kg/m^3
Phantom section: Flat Section
Measurement Standard: DASY5
DASY5 Configuration:
- Probe: EX3DV4 - SN3944; ConvF(4.47, 4.47, 4.47); Calibrated: 02.08.2013;
- Sensor-Surface: 2mm (Mechanical Surface Detection), z = 1.0, 23.0
- Electronics: DAE3 Sn413; Calibrated: 16.01.2014
- Phantom: ELI 4.0; Type: QDOVA001BA; Serial: 1046
- DASY52 52.8.7(1137); SEMCAD X 14.6.10(7164)

MSL 5GHz/d=10mm, Pin=100mW 5.2GHz/Area Scan (61x61x1): Interpolated grid: dx=1.000 mm, dy=1.000 mm

Maximum value of SAR (interpolated) = 15.4 W/kg

MSL 5GHz/d=10mm, Pin=100mW 5.2GHz/Zoom Scan (9x9x12)/Cube 0:

Measurement grid: dx=4mm, dy=4mm, dz=2mm
Reference Value = 57.153 V/m; Power Drift = -0.01 dB
Peak SAR (extrapolated) = 29.6 W/kg
SAR(1 g) = 7.34 W/kg; SAR(10 g) = 2.09 W/kg
Maximum value of SAR (measured) = 15.4 W/kg

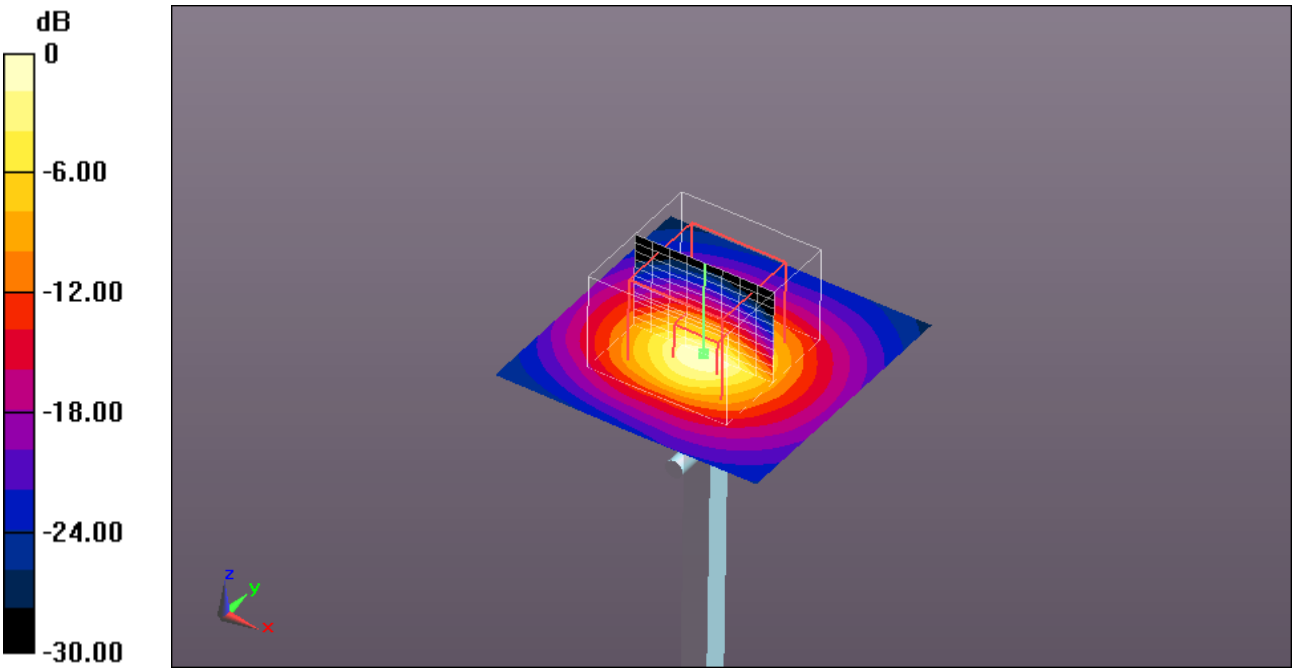

0 dB = 15.4 W/kg = 11.88 dBW/kg

Additional information:
ambient temperature: 22.5°C; liquid temperature: 21.9°C

Date/Time: 19.03.2014 16:13:52

SystemPerformanceCheck-D5GHz body 2014-2014-03-19

DUT: Dipole 5 GHz; Type: D5GHzV2; Serial: 1055
Communication System: UID 0, CW (0); Communication System Band: D5GHz (5000.0 - 6000.0 MHz);
Frequency: 5500 MHz; Communication System PAR: 0 dB; PMF: 1
Medium parameters used: f = 5500 MHz; σ = 5.606 S/m; ε_r = 47.627; ρ = 1000 kg/m^3
Phantom section: Flat Section
Measurement Standard: DASY5
DASY5 Configuration:
- Probe: EX3DV4 - SN3944; ConvF(4.09, 4.09, 4.09); Calibrated: 02.08.2013;
- Sensor-Surface: 2mm (Mechanical Surface Detection (Locations From Previous Scan Used)), Sensor-Surface: 2mm (Mechanical Surface Detection), z = 1.0, 23.0
- Electronics: DAE3 Sn413; Calibrated: 16.01.2014
- Phantom: ELI 4.0; Type: QDOVA001BA; Serial: 1046
- DASY52 52.8.7(1137); SEMCAD X 14.6.10(7164)

MSL 5GHz/d=10mm, Pin=100mW 5.5GHz/Area Scan (61x61x1): Interpolated grid: dx=1.000 mm, dy=1.000 mm

Maximum value of SAR (interpolated) = 20.8 W/kg

MSL 5GHz/d=10mm, Pin=100mW 5.5GHz/Zoom Scan (8x8x12)/Cube 0:

Measurement grid: dx=4mm, dy=4mm, dz=2mm
Reference Value = 60.996 V/m; Power Drift = -0.04 dB
Peak SAR (extrapolated) = 30.8 W/kg
SAR(1 g) = 7.45 W/kg; SAR(10 g) = 2.08 W/kg
Maximum value of SAR (measured) = 15.6 W/kg

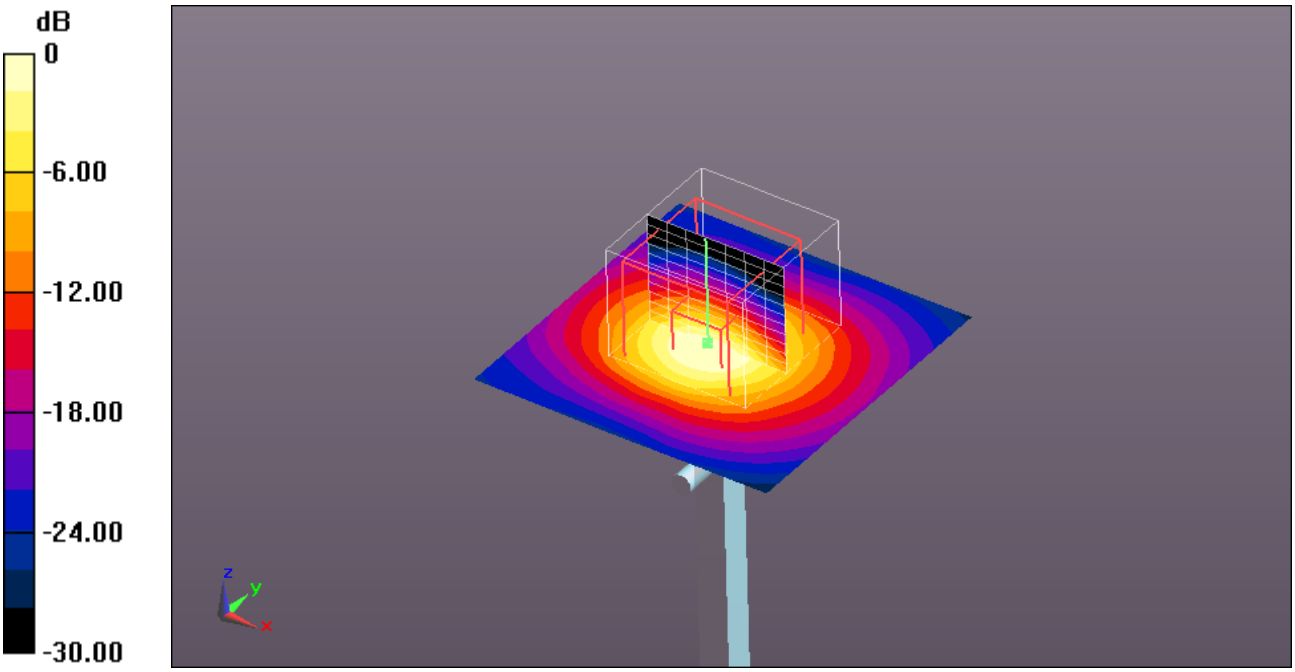

0 dB = 15.6 W/kg = 11.93 dBW/kg

Additional information:
ambient temperature: 22.5°C; liquid temperature: 21.9°C

Date/Time: 19.03.2014 15:02:04

SystemPerformanceCheck-D5GHz body 2014-2014-03-19

DUT: Dipole 5 GHz; Type: D5GHzV2; Serial: 1055
Communication System: UID 0, CW (0); Communication System Band: D5GHz (5000.0 - 6000.0 MHz);
Frequency: 5800 MHz; Communication System PAR: 0 dB; PMF: 1
Medium parameters used: f = 5800 MHz; σ = 5.962 S/m; ε_r = 47.058; ρ = 1000 kg/m^3
Phantom section: Flat Section
Measurement Standard: DASY5
DASY5 Configuration:
- Probe: EX3DV4 - SN3944; ConvF(4.2, 4.2, 4.2); Calibrated: 02.08.2013;
- Sensor-Surface: 2mm (Mechanical Surface Detection (Locations From Previous Scan Used)), Sensor-Surface: 2mm (Mechanical Surface Detection), z = 1.0, 23.0
- Electronics: DAE3 Sn413; Calibrated: 16.01.2014
- Phantom: ELI 4.0; Type: QDOVA001BA; Serial: 1046
- DASY52 52.8.7(1137); SEMCAD X 14.6.10(7164)

MSL 5GHz/d=10mm, Pin=100mW 5.8GHz/Area Scan (61x61x1): Interpolated grid: dx=1.000 mm, dy=1.000 mm

Maximum value of SAR (interpolated) = 18.8 W/kg

MSL 5GHz/d=10mm, Pin=100mW 5.8GHz/Zoom Scan (7x7x12)/Cube 0:

Measurement grid: dx=4mm, dy=4mm, dz=2mm
Reference Value = 56.112 V/m; Power Drift = 0.02 dB
Peak SAR (extrapolated) = 33.5 W/kg
SAR(1 g) = 7.82 W/kg; SAR(10 g) = 2.19 W/kg
Maximum value of SAR (measured) = 16.5 W/kg

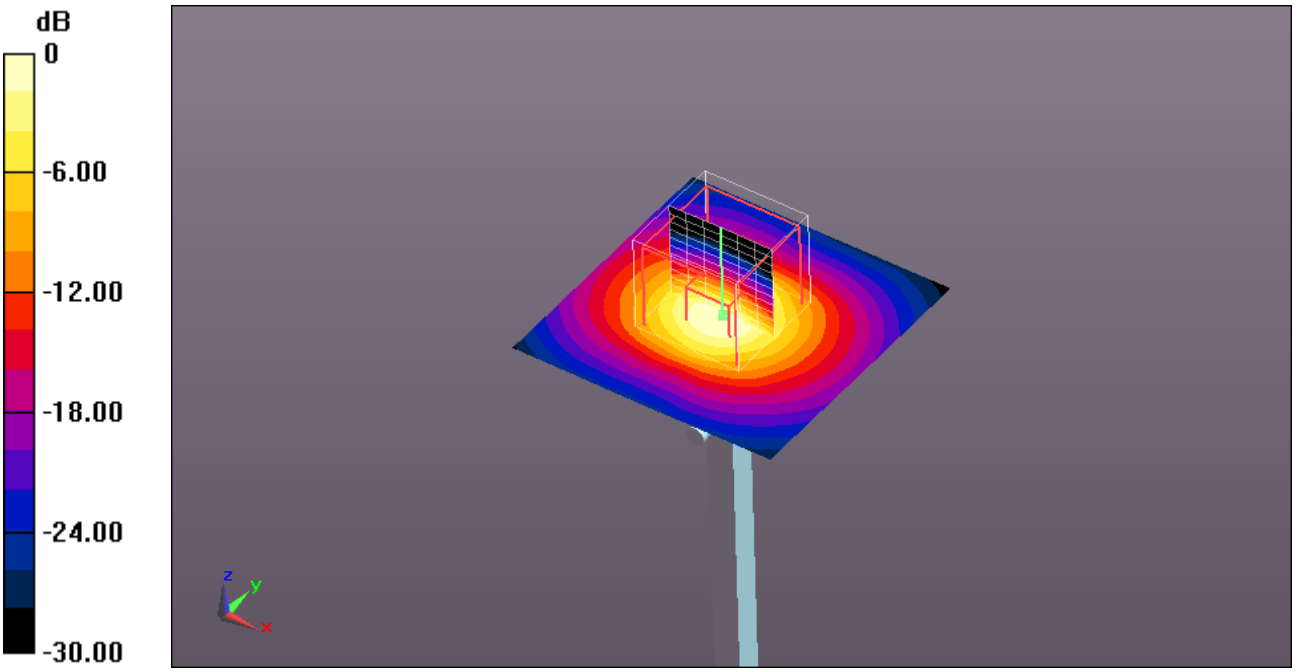

0 dB = 16.5 W/kg = 12.17 dBW/kg

Additional information:
ambient temperature: 22.5°C; liquid temperature: 21.9°C

Annex B: DASY5 measurement results

SAR plots for **the highest measured SAR** in each exposure configuration, wireless mode and frequency band combination according to FCC KDB 865664 D02

Annex B.1: GSM 850MHz

Date/Time: 12.03.2014 14:43:06

FCC_EN62209-2-GSM850 body

DUT: Sony; Type: -/-; Serial: CB5126DQ0B
Communication System: UID 0, GSM/GPRS 2TS (0); Communication System Band: GSM 850; Frequency: 824.2 MHz; Communication System PAR: 6.021 dB; PMF: 2.00009
Medium parameters used (interpolated): f = 824.2 MHz; σ = 0.977 S/m; ε_r = 54.044; ρ = 1000 kg/m^3
Phantom section: Flat Section
Measurement Standard: DASY5
DASY5 Configuration:
- Probe: ES3DV3 - SN3320; ConvF(6.29, 6.29, 6.29); Calibrated: 04.06.2013;
- Sensor-Surface: 4mm (Mechanical Surface Detection (Locations From Previous Scan Used)), Sensor-Surface: 4mm (Mechanical Surface Detection), z = 2.0, 32.0
- Electronics: DAE3 Sn413; Calibrated: 16.01.2014
- Phantom: ELI 4.0; Type: QDOVA001BA; Serial: 1046
- DASY52 52.8.7(1137); SEMCAD X 14.6.10(7164)

MSL835 - backoff power - 2TS/Rear Position - Low - 0mm - WC/Area Scan (151x211x1): Interpolated grid: dx=1.500 mm, dy=1.500 mm.

Maximum value of SAR (interpolated) = 1.07 W/kg

MSL835 - backoff power - 2TS/Rear Position - Low - 0mm - WC/Zoom Scan (5x5x7)/Cube 0: Measurement grid: dx=7.5mm, dy=7.5mm, dz=5mm

Reference Value = 29.818 V/m; Power Drift = 0.12 dB
Peak SAR (extrapolated) = 2.21 W/kg
SAR(1 g) = 0.847 W/kg; SAR(10 g) = 0.418 W/kg
Maximum value of SAR (measured) = 0.952 W/kg

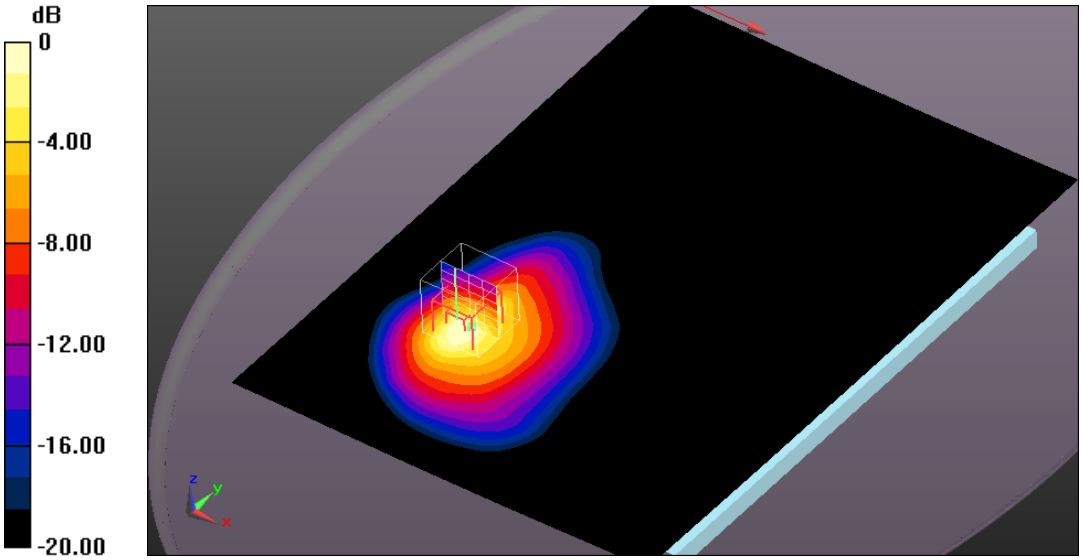

0 dB = 0.952 W/kg = -0.21 dBW/kg

Additional information:
position or distance of DUT to SAM: 0 mm
ambient temperature: 22.5°C; liquid temperature: 22.0°C

Annex B.2: GSM 1900MHz

Date/Time: 13.03.2014 17:58:17

FCC_EN62209-2-GSM1900 body

DUT: Sony; Type: -/-; Serial: CB5126DQ0B
Communication System: UID 0, GSM/GPRS 2TS (0); Communication System Band: GSM 1900; Frequency: 1909.8 MHz; Communication System PAR: 6.021 dB; PMF: 2.00009
Medium parameters used: f = 1910 MHz; σ = 1.507 S/m; ε_r = 52.421; ρ = 1000 kg/m^3
Phantom section: Flat Section
Measurement Standard: DASY5
DASY5 Configuration:
- Probe: ES3DV3 - SN3320; ConvF(4.78, 4.78, 4.78); Calibrated: 04.06.2013;
- Sensor-Surface: 4mm (Mechanical Surface Detection (Locations From Previous Scan Used)), Sensor-Surface: 4mm (Mechanical Surface Detection), z = 2.0, 32.0
- Electronics: DAE3 Sn413; Calibrated: 16.01.2014
- Phantom: ELI 4.0; Type: QDOVA001BA; Serial: 1046
- DASY52 52.8.7(1137); SEMCAD X 14.6.10(7164)

MSL1900 - backoff power 2TS/Rear Position - High - 0mm WC/Area Scan (151x211x1): Interpolated grid: dx=1.500 mm, dy=1.500 mm

Maximum value of SAR (interpolated) = 1.15 W/kg

MSL1900 - backoff power 2TS/Rear Position - High - 0mm WC/Zoom Scan (5x5x7)/Cube 0: Measurement grid: dx=7.5mm, dy=7.5mm, dz=5mm

Reference Value = 26.854 V/m; Power Drift = -0.04 dB
Peak SAR (extrapolated) = 1.99 W/kg
SAR(1 g) = 0.876 W/kg; SAR(10 g) = 0.373 W/kg
Maximum value of SAR (measured) = 0.987 W/kg

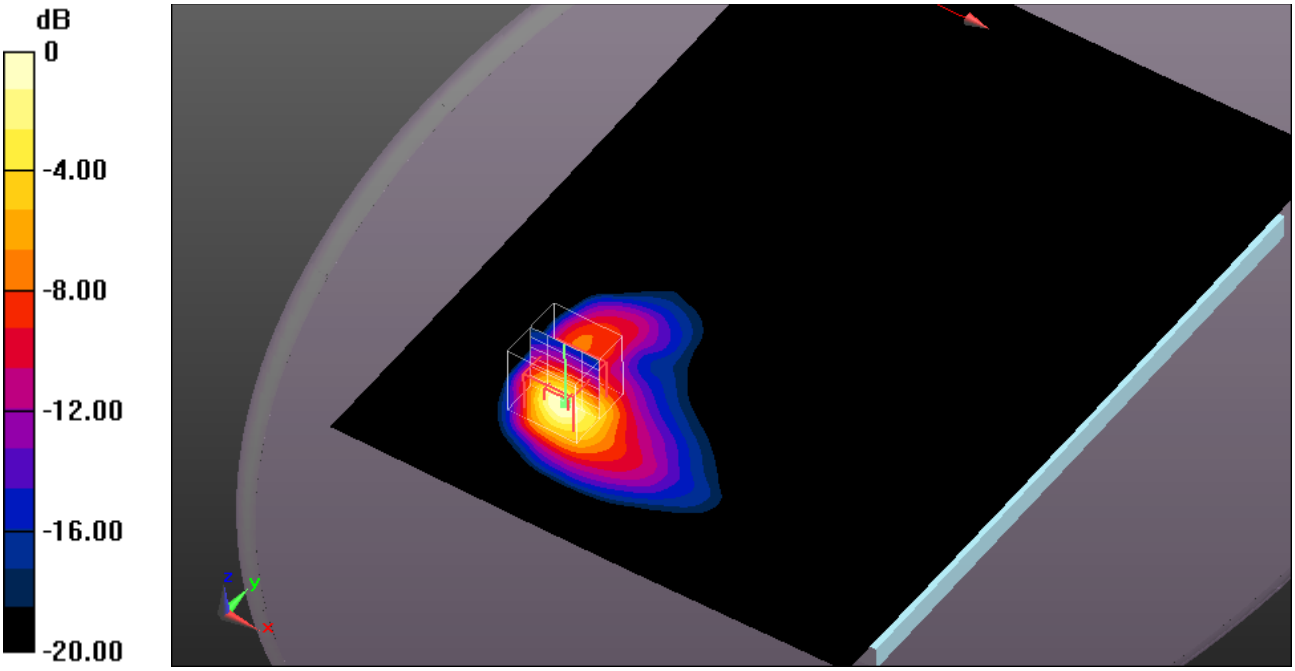

0 dB = 0.987 W/kg = -0.06 dBW/kg

Additional information:
position or distance of DUT to SAM: 0 mm
ambient temperature: 22.2°C; liquid temperature: 21.8°C

Annex B.3: UMTS FDD II

Date/Time: 13.03.2014 20:52:55

FCC_EN62209-2-UMTS FDD II body

DUT: Sony; Type: -/-; Serial: CB5126DQ7Z
Communication System: UID 0, UMTS FDD (0); Communication System Band: UMTS FDD II; Frequency: 1907.6 MHz; Communication System PAR: 0 dB; PMF: 1
Medium parameters used: f = 1908 MHz; σ = 1.508 S/m; ε_r = 52.446; ρ = 1000 kg/m^3
Phantom section: Flat Section
Measurement Standard: DASY5
DASY5 Configuration:
- Probe: ES3DV3 - SN3320; ConvF(4.78, 4.78, 4.78); Calibrated: 04.06.2013;
- Sensor-Surface: 4mm (Mechanical Surface Detection (Locations From Previous Scan Used)), Sensor-Surface: 4mm (Mechanical Surface Detection), z = 2.0, 32.0
- Electronics: DAE3 Sn413; Calibrated: 16.01.2014
- Phantom: ELI 4.0; Type: QDOVA001BA; Serial: 1046
- DASY52 52.8.7(1137); SEMCAD X 14.6.10(7164)

MSL1900 - backoff power/Rear Position - High - 0mm/Area Scan (151x211x1): Interpolated grid: dx=1.500 mm, dy=1.500 mm

Maximum value of SAR (interpolated) = 0.843 W/kg

MSL1900 - backoff power/Rear Position - High - 0mm/Zoom Scan (5x5x7)/Cube 0: Measurement grid: dx=7.5mm, dy=7.5mm, dz=5mm

Reference Value = 21.445 V/m; Power Drift = 0.01 dB
Peak SAR (extrapolated) = 1.68 W/kg
SAR(1 g) = 0.727 W/kg; SAR(10 g) = 0.306 W/kg
Maximum value of SAR (measured) = 0.842 W/kg

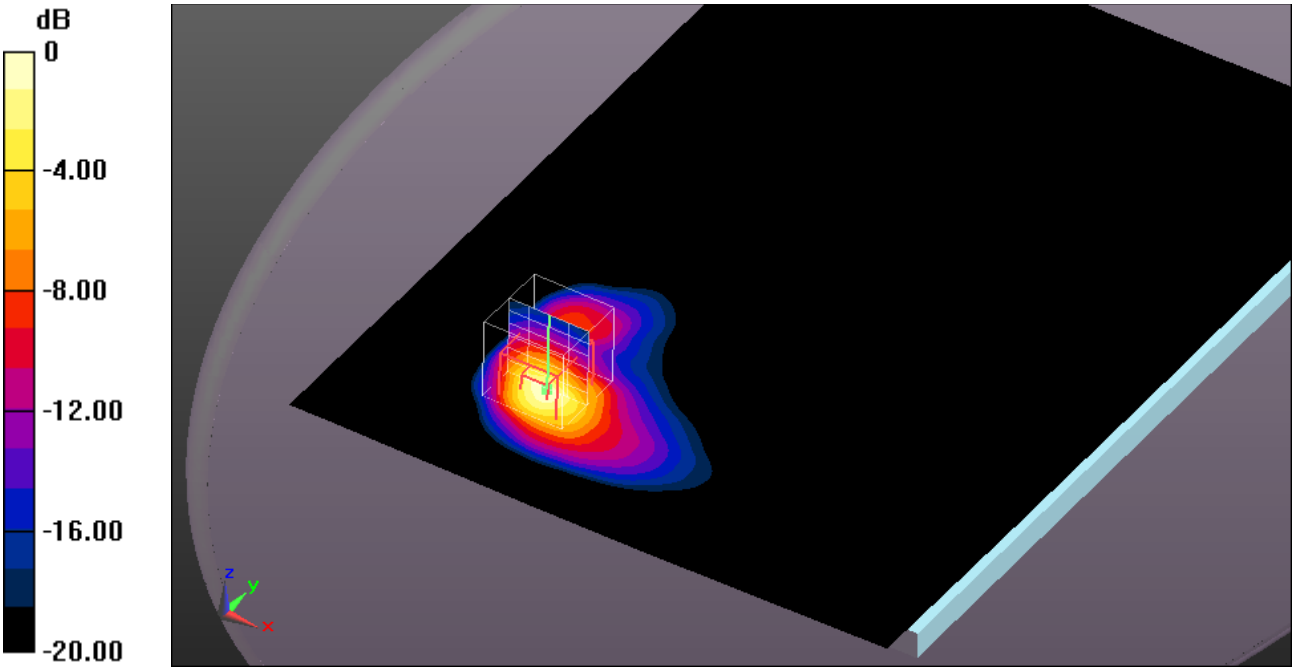

0 dB = 0.842 W/kg = -0.75 dBW/kg

Additional information:
position or distance of DUT to SAM: 0 mm
ambient temperature: 22.2°C; liquid temperature: 21.8°C

Annex B.4: UMTS FDD V

Date/Time: 12.03.2014 17:01:06

FCC_EN62209-2-UMTS V body

DUT: Sony; Type: -/-; Serial: CB5126DQ7Z
Communication System: UID 0, UMTS FDD (0); Communication System Band: UMTS FDD V; Frequency: 826.4 MHz; Communication System PAR: 0 dB; PMF: 1
Medium parameters used (interpolated): f = 826.4 MHz; σ = 0.981 S/m; ε_r = 54.028; ρ = 1000 kg/m^3
Phantom section: Flat Section
Measurement Standard: DASY5
DASY5 Configuration:
- Probe: ES3DV3 - SN3320; ConvF(6.29, 6.29, 6.29); Calibrated: 04.06.2013;
- Sensor-Surface: 4mm (Mechanical Surface Detection (Locations From Previous Scan Used)), Sensor-Surface: 4mm (Mechanical Surface Detection), z = 2.0, 32.0
- Electronics: DAE3 Sn413; Calibrated: 16.01.2014
- Phantom: ELI 4.0; Type: QDOVA001BA; Serial: 1046
- DASY52 52.8.7(1137); SEMCAD X 14.6.10(7164)

MSL835 - backoff power/Rear Position - Low - 0mm/Area Scan (151x211x1): Interpolated grid: dx=1.500 mm, dy=1.500 mm

Maximum value of SAR (interpolated) = 0.928 W/kg

MSL835 - backoff power/Rear Position - Low - 0mm/Zoom Scan (5x5x7)/Cube 0: Measurement grid: dx=7.5mm, dy=7.5mm, dz=5mm

Reference Value = 30.302 V/m; Power Drift = 0.03 dB
Peak SAR (extrapolated) = 1.97 W/kg
SAR(1 g) = 0.807 W/kg; SAR(10 g) = 0.417 W/kg
Maximum value of SAR (measured) = 0.857 W/kg

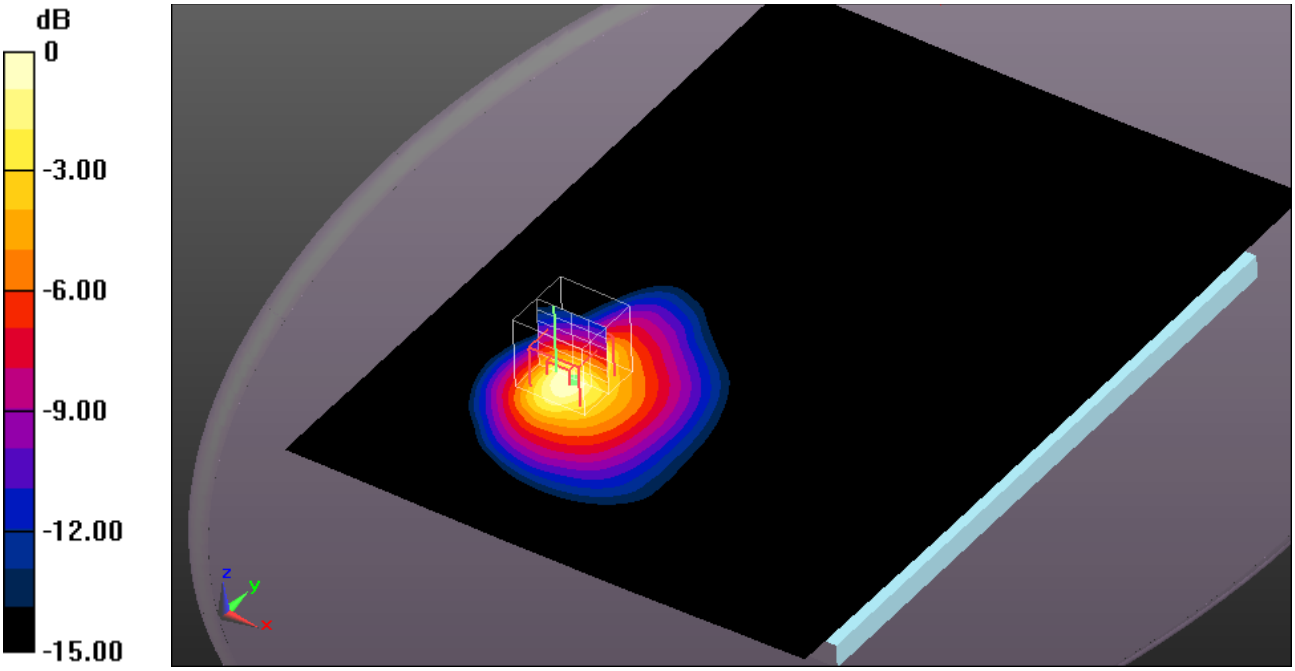

0 dB = 0.857 W/kg = -0.67 dBW/kg

Additional information:
position or distance of DUT to SAM: 0 mm
ambient temperature: 22.5°C; liquid temperature: 22.0°C

Annex B.5: CDMA 2000 BC0

Date/Time: 13.03.2014 09:24:13

FCC_EN62209-2-CDMA2000 BC0 body

DUT: Sony; Type: -/-; Serial: CB5126DQBB
Communication System: UID 0, CDMA2000 (0); Communication System Band: MC0; Frequency: 824.7 MHz; Communication System PAR: 0 dB; PMF: 1.12202e-005
Medium parameters used: f = 825 MHz; σ = 0.978 S/m; ε_r = 54.032; ρ = 1000 kg/m^3
Phantom section: Flat Section
Measurement Standard: DASY5
DASY5 Configuration:
- Probe: ES3DV3 - SN3320; ConvF(6.29, 6.29, 6.29); Calibrated: 04.06.2013;
- Sensor-Surface: 4mm (Mechanical Surface Detection (Locations From Previous Scan Used)), Sensor-Surface: 4mm (Mechanical Surface Detection), z = 2.0, 32.0
- Electronics: DAE3 Sn413; Calibrated: 16.01.2014
- Phantom: ELI 4.0; Type: QDOVA001BA; Serial: 1046
- DASY52 52.8.7(1137); SEMCAD X 14.6.10(7164)

MSL835 - backoff power/Rear Position - Low - 0mm WC/Area Scan (151x211x1): Interpolated grid: dx=1.500 mm, dy=1.500 mm

Maximum value of SAR (interpolated) = 0.821 W/kg

MSL835 - backoff power/Rear Position - Low - 0mm WC/Zoom Scan (5x5x7)/Cube 0: Measurement grid: dx=7.5mm, dy=7.5mm, dz=5mm

Reference Value = 28.116 V/m; Power Drift = 0.07 dB
Peak SAR (extrapolated) = 2.19 W/kg
SAR(1 g) = 0.838 W/kg; SAR(10 g) = 0.409 W/kg
Maximum value of SAR (measured) = 0.931 W/kg

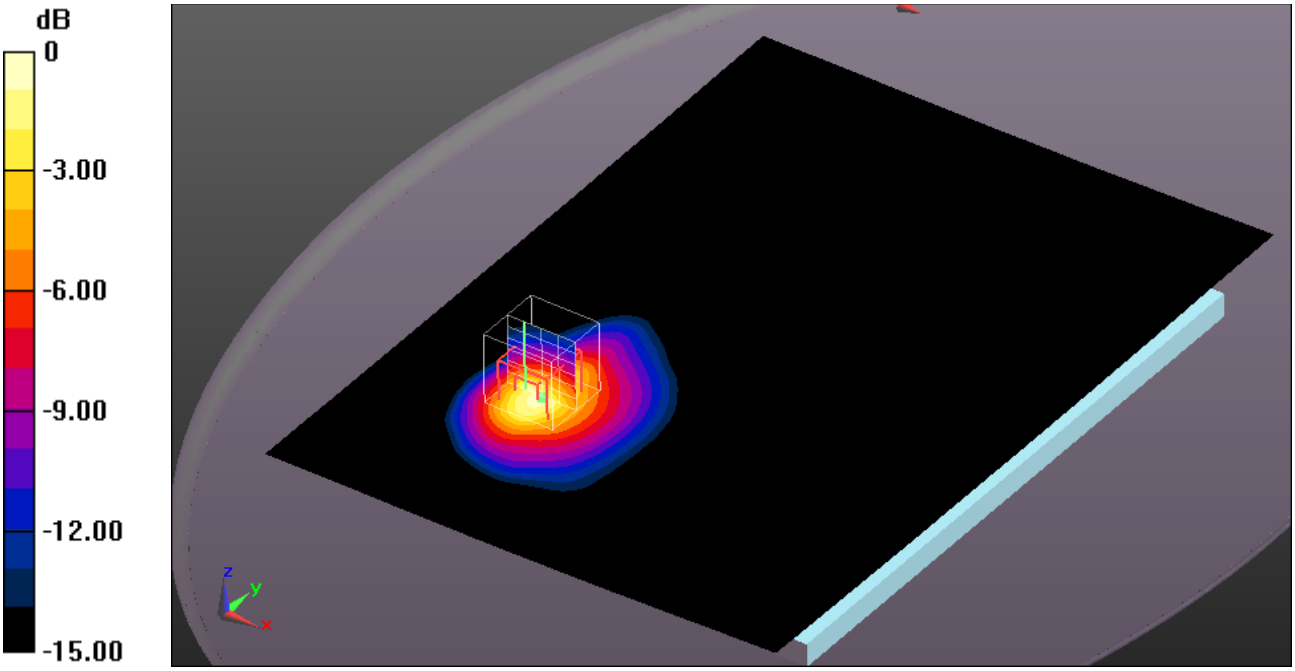

0 dB = 0.931 W/kg = -0.31 dBW/kg

Additional information:
position or distance of DUT to SAM: 0mm
ambient temperature: 22.3°C; liquid temperature: 21.6°C

Annex B.6: CDMA 2000 BC1

Date/Time: 13.03.2014 12:59:49

FCC_EN62209-2-CDMA2000 BC1 body

DUT: Sony; Type: -/-; Serial: CB5126DQBB
Communication System: UID 0, CDMA2000 (0); Communication System Band: MC1; Frequency: 1880 MHz;
Communication System PAR: 0 dB; PMF: 1.12202e-005
Medium parameters used: f = 1880 MHz; σ = 1.481 S/m; ε_r = 52.79; ρ = 1000 kg/m^3
Phantom section: Flat Section
Measurement Standard: DASY5
DASY5 Configuration:
- Probe: ES3DV3 - SN3320; ConvF(4.78, 4.78, 4.78); Calibrated: 04.06.2013;
- Sensor-Surface: 4mm (Mechanical Surface Detection (Locations From Previous Scan Used)), Sensor-Surface: 4mm (Mechanical Surface Detection), z = 2.0, 32.0
- Electronics: DAE3 Sn413; Calibrated: 16.01.2014
- Phantom: ELI 4.0; Type: QDOVA001BA; Serial: 1046
- DASY52 52.8.7(1137); SEMCAD X 14.6.10(7164)

MSL1900 - backoff power/Rear Position - Mid - 0mm/Area Scan (151x211x1): Interpolated grid: dx=1.500 mm, dy=1.500 mm

Maximum value of SAR (interpolated) = 1.47 W/kg

MSL1900 - backoff power/Rear Position - Mid - 0mm/Zoom Scan (5x5x7)/Cube 0: Measurement grid: dx=7.5mm, dy=7.5mm, dz=5mm

Reference Value = 28.413 V/m; Power Drift = -0.08 dB
Peak SAR (extrapolated) = 2.31 W/kg
SAR(1 g) = 0.996 W/kg; SAR(10 g) = 0.419 W/kg
Maximum value of SAR (measured) = 1.18 W/kg

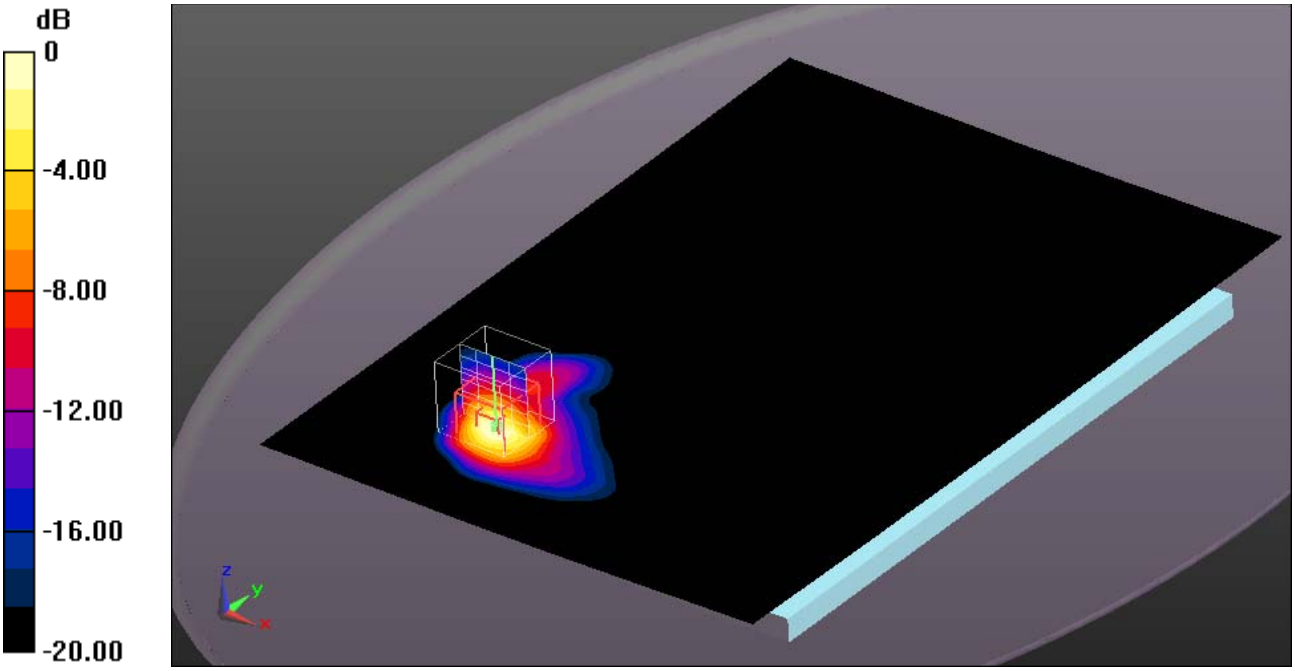

0 dB = 1.18 W/kg = 0.72 dBW/kg

Additional information:
position or distance of DUT to SAM: 0mm
ambient temperature: 22.2°C; liquid temperature: 21.8°C

Annex B.7: LTE FDD 2

Date/Time: 14.03.2014 09:25:28

FCC_EN62209-2-LTE FDD 2 body

DUT: Sony; Type: -/-; Serial: CB5126DPUK
Communication System: UID 0, LTE FDD (0); Communication System Band: LTE 2 (1900MHz); Frequency: 1900 MHz; Communication System PAR: 0 dB; PMF: 1
Medium parameters used: f = 1900 MHz; σ = 1.506 S/m; ε_r = 52.538; ρ = 1000 kg/m^3
Phantom section: Flat Section
Measurement Standard: DASY5
DASY5 Configuration:
- Probe: ES3DV3 - SN3320; ConvF(4.78, 4.78, 4.78); Calibrated: 04.06.2013;
- Sensor-Surface: 4mm (Mechanical Surface Detection (Locations From Previous Scan Used)), Sensor-Surface: 4mm (Mechanical Surface Detection), z = 2.0, 32.0
- Electronics: DAE3 Sn413; Calibrated: 16.01.2014
- Phantom: ELI 4.0; Type: QDOVA001BA; Serial: 1046
- DASY52 52.8.7(1137); SEMCAD X 14.6.10(7164)

MSL1900 - QPSK - 20MHz BW - 1RB - backoff power/Rear Position - High - 50RB offset - 0mm/Area Scan (151x211x1): Interpolated grid: dx=1.500 mm, dy=1.500 mm

Maximum value of SAR (interpolated) = 1.30 W/kg

MSL1900 - QPSK - 20MHz BW - 1RB - backoff power/Rear Position - High - 50RB offset - 0mm/Zoom Scan (5x5x7)/Cube 0: Measurement grid: dx=7.5mm, dy=7.5mm, dz=5mm

Reference Value = 24.716 V/m; Power Drift = 0.01 dB
Peak SAR (extrapolated) = 2.52 W/kg
SAR(1 g) = 1.06 W/kg; SAR(10 g) = 0.436 W/kg
Maximum value of SAR (measured) = 1.24 W/kg

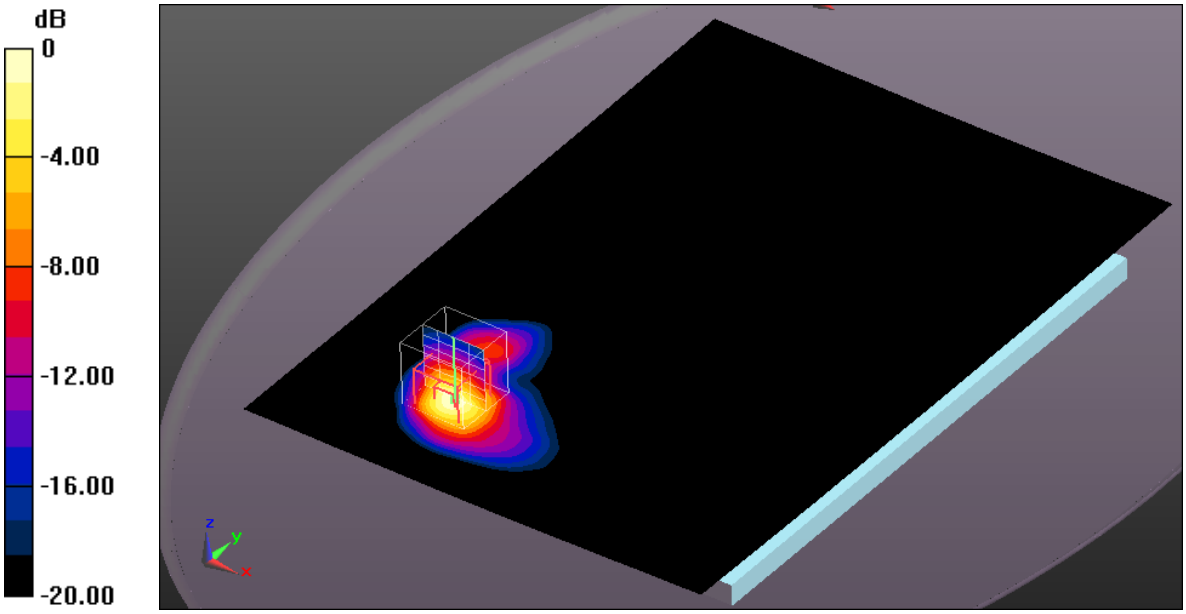

0 dB = 1.24 W/kg = 0.93 dBW/kg

Additional information:
position or distance of DUT to SAM: 0mm
ambient temperature: 22.1°C; liquid temperature: 21.5°C

Date/Time: 14.03.2014 10:28:53

FCC_EN62209-2-LTE FDD 2 body

DUT: Sony; Type: -/-; Serial: CB5126DPUK
Communication System: UID 0, LTE FDD (0); Communication System Band: LTE 2 (1900MHz); Frequency: 1900 MHz; Communication System PAR: 0 dB; PMF: 1
Medium parameters used: f = 1900 MHz; σ = 1.506 S/m; ε_r = 52.538; ρ = 1000 kg/m^3
Phantom section: Flat Section
Measurement Standard: DASY5
DASY5 Configuration:
- Probe: ES3DV3 - SN3320; ConvF(4.78, 4.78, 4.78); Calibrated: 04.06.2013;
- Sensor-Surface: 4mm (Mechanical Surface Detection (Locations From Previous Scan Used)), Sensor-Surface: 4mm (Mechanical Surface Detection), z = 2.0, 32.0
- Electronics: DAE3 Sn413; Calibrated: 16.01.2014
- Phantom: ELI 4.0; Type: QDOVA001BA; Serial: 1046
- DASY52 52.8.7(1137); SEMCAD X 14.6.10(7164)

MSL1900 - QPSK - 20MHz BW - 100RB - backoff power/Rear Position - High - 0RB offset - 0mm/Area Scan (151x211x1): Interpolated grid: dx=1.500 mm, dy=1.500 mm

Maximum value of SAR (interpolated) = 1.20 W/kg

MSL1900 - QPSK - 20MHz BW - 100RB - backoff power/Rear Position - High - 0RB offset - 0mm/Zoom Scan (5x5x7)/Cube 0: Measurement grid: dx=7.5mm, dy=7.5mm, dz=5mm

Reference Value = 23.732 V/m; Power Drift = 0.00 dB
Peak SAR (extrapolated) = 2.38 W/kg
SAR(1 g) = 0.991 W/kg; SAR(10 g) = 0.405 W/kg
Maximum value of SAR (measured) = 1.16 W/kg

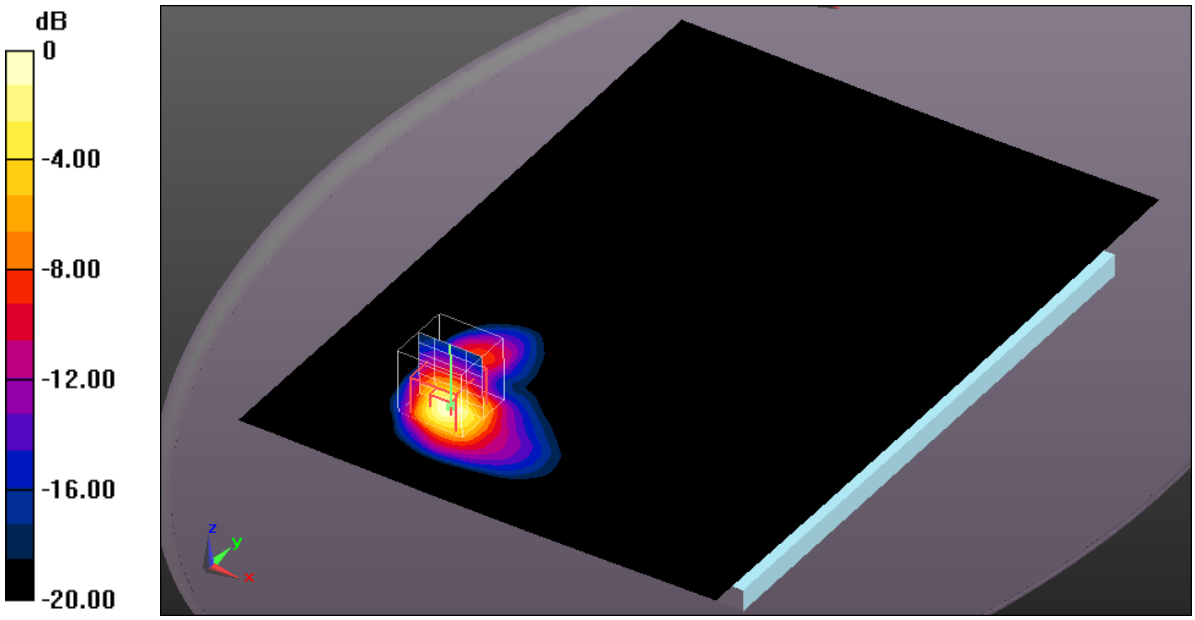

0 dB = 1.16 W/kg = 0.64 dBW/kg

Additional information:
position or distance of DUT to SAM: 0mm
ambient temperature: 22.1°C; liquid temperature: 21.5°C

Annex B.8: LTE FDD 4

Date/Time: 15.03.2014 12:27:27

FCC_EN62209-2-LTE FDD 4 body

DUT: Sony; Type: -/-; Serial: CB5126DPUK
Communication System: UID 0, LTE FDD (0); Communication System Band: LTE 4 (1700MHz); Frequency: 1745 MHz; Communication System PAR: 0 dB; PMF: 1
Medium parameters used: f = 1745 MHz; σ = 1.491 S/m; ε_r = 52.512; ρ = 1000 kg/m^3
Phantom section: Flat Section
Measurement Standard: DASY5
DASY5 Configuration:
- Probe: ES3DV3 - SN3320; ConvF(5.04, 5.04, 5.04); Calibrated: 04.06.2013;
- Sensor-Surface: 4mm (Mechanical Surface Detection (Locations From Previous Scan Used)), Sensor-Surface: 4mm (Mechanical Surface Detection), z = 2.0, 32.0
- Electronics: DAE3 Sn413; Calibrated: 16.01.2014
- Phantom: ELI 4.0; Type: QDOVA001BA; Serial: 1046
- DASY52 52.8.7(1137); SEMCAD X 14.6.10(7164)

MSL1900 - QPSK - 20MHz BW - 50RB - backoff power/Rear Position - High - 25RB offset - 0mm/Area Scan (151x211x1): Interpolated grid: dx=1.500 mm, dy=1.500 mm

Maximum value of SAR (interpolated) = 1.44 W/kg

MSL1900 - QPSK - 20MHz BW - 50RB - backoff power/Rear Position - High - 25RB offset - 0mm/Zoom Scan (5x5x7)/Cube 0: Measurement grid: dx=7.5mm, dy=7.5mm, dz=5mm

Reference Value = 27.175 V/m; Power Drift = -0.08 dB
Peak SAR (extrapolated) = 2.31 W/kg
SAR(1 g) = 0.992 W/kg; SAR(10 g) = 0.419 W/kg
Maximum value of SAR (measured) = 1.03 W/kg

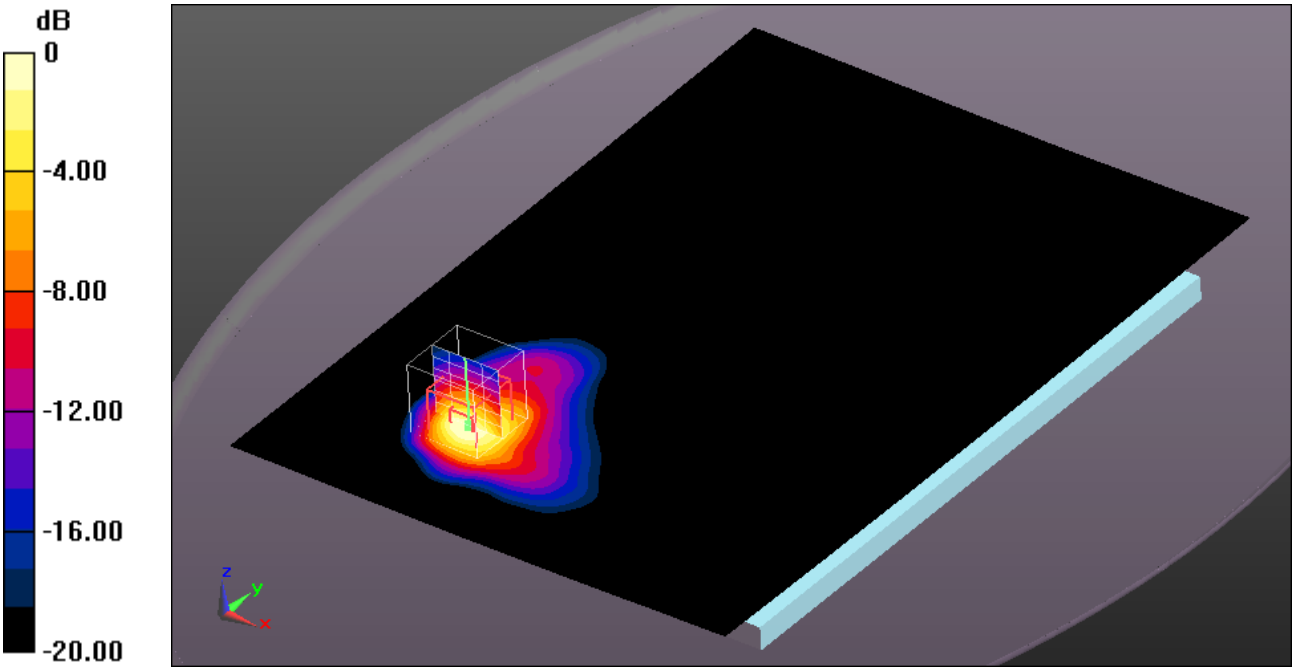

0 dB = 1.03 W/kg = 0.13 dBW/kg

Additional information:
position or distance of DUT to SAM: 0mm
ambient temperature: 22.3°C; liquid temperature: 21.7°C

Date/Time: 15.03.2014 13:35:14

FCC_EN62209-2-LTE FDD 4 body

DUT: Sony; Type: -/-; Serial: CB5126DPUK
Communication System: UID 0, LTE FDD (0); Communication System Band: LTE 4 (1700MHz); Frequency: 1745 MHz; Communication System PAR: 0 dB; PMF: 1
Medium parameters used: f = 1745 MHz; σ = 1.491 S/m; ε_r = 52.512; ρ = 1000 kg/m^3
Phantom section: Flat Section
Measurement Standard: DASY5
DASY5 Configuration:
- Probe: ES3DV3 - SN3320; ConvF(5.04, 5.04, 5.04); Calibrated: 04.06.2013;
- Sensor-Surface: 4mm (Mechanical Surface Detection (Locations From Previous Scan Used)), Sensor-Surface: 4mm (Mechanical Surface Detection), z = 2.0, 32.0
- Electronics: DAE3 Sn413; Calibrated: 16.01.2014
- Phantom: ELI 4.0; Type: QDOVA001BA; Serial: 1046
- DASY52 52.8.7(1137); SEMCAD X 14.6.10(7164)

MSL1900 - QPSK - 20MHz BW - 100RB - backoff power/Rear Position - High - 0RB offset - 0mm/Area Scan (151x211x1): Interpolated grid: dx=1.500 mm, dy=1.500 mm

Maximum value of SAR (interpolated) = 1.51 W/kg

MSL1900 - QPSK - 20MHz BW - 100RB - backoff power/Rear Position - High - 0RB offset - 0mm/Zoom Scan (5x5x7)/Cube 0: Measurement grid: dx=7.5mm, dy=7.5mm, dz=5mm

Reference Value = 24.674 V/m; Power Drift = -0.12 dB
Peak SAR (extrapolated) = 2.32 W/kg
SAR(1 g) = 0.991 W/kg; SAR(10 g) = 0.420 W/kg
Maximum value of SAR (measured) = 1.14 W/kg

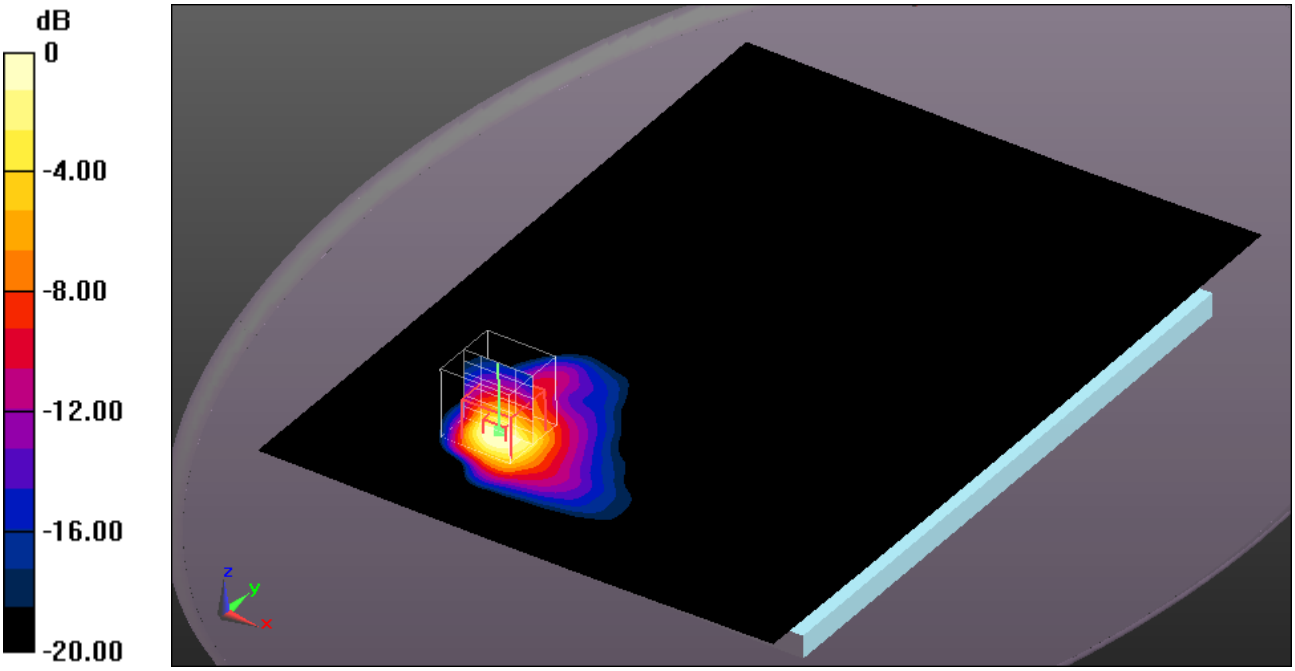

0 dB = 1.14 W/kg = 0.57 dBW/kg

Additional information:
position or distance of DUT to SAM: 0mm
ambient temperature: 22.3°C; liquid temperature: 21.7°C

Annex B.9: LTE FDD 7

Date/Time: 18.03.2014 20:52:02

FCC_EN62209-2-LTE FDD 7 body

DUT: Sony; Type: -/-; Serial: CB5126DPUK
Communication System: UID 0, LTE FDD (0); Communication System Band: LTE 7 (2600MHz); Frequency: 2560 MHz; Communication System PAR: 0 dB; PMF: 1
Medium parameters used: f = 2560 MHz; σ = 2.108 S/m; ε_r = 51.369; ρ = 1000 kg/m^3
Phantom section: Flat Section
Measurement Standard: DASY5
DASY5 Configuration:
- Probe: EX3DV4 - SN3944; ConvF(7.27, 7.27, 7.27); Calibrated: 02.08.2013;
- Sensor-Surface: 2mm (Mechanical Surface Detection (Locations From Previous Scan Used)), Sensor-Surface: 2mm (Mechanical Surface Detection), z = 1.0, 31.0
- Electronics: DAE3 Sn413; Calibrated: 16.01.2014
- Phantom: ELI 4.0; Type: QDOVA001BA; Serial: 1046
- DASY52 52.8.7(1137); SEMCAD X 14.6.10(7164)

MSL2450_2600 -QPSK - 20MHz BW - 1RB - backoff power/Rear Position - High - 50RB offset - 0mm/Area Scan (221x311x1): Interpolated grid: dx=1.000 mm, dy=1.000 mm

Maximum value of SAR (interpolated) = 2.02 W/kg

MSL2450_2600 -QPSK - 20MHz BW - 1RB - backoff power/Rear Position - High - 50RB offset - 0mm/Zoom Scan (7x8x7)/Cube 0: Measurement grid: dx=5mm, dy=5mm, dz=5mm

Reference Value = 24.392 V/m; Power Drift = 0.00 dB
Peak SAR (extrapolated) = 3.29 W/kg
SAR(1 g) = 1.01 W/kg; SAR(10 g) = 0.359 W/kg
Maximum value of SAR (measured) = 1.96 W/kg

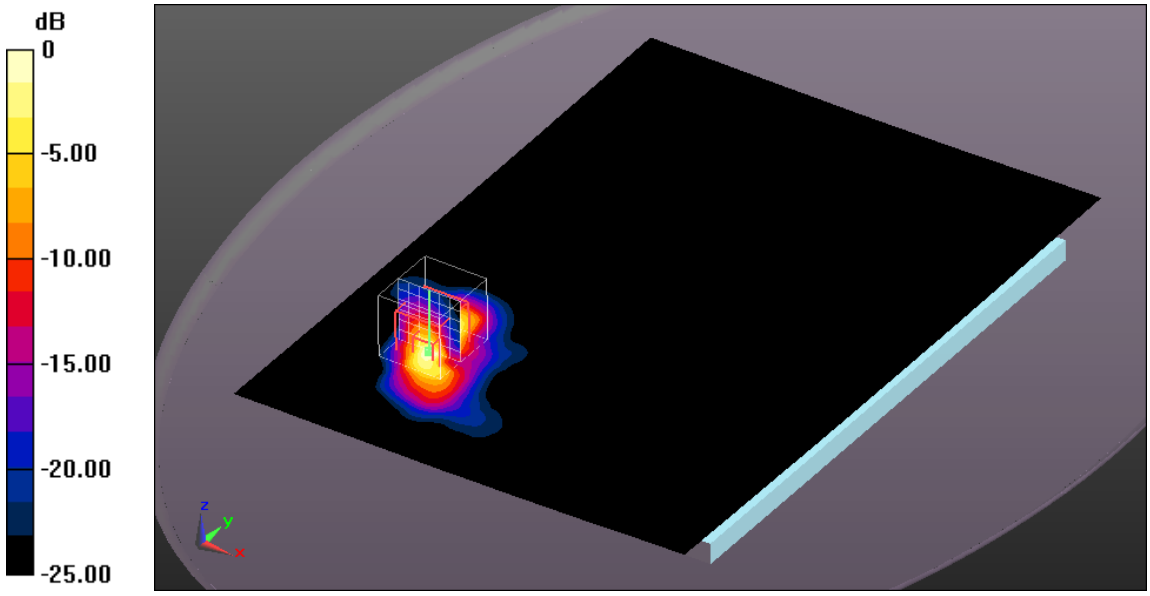

0 dB = 1.96 W/kg = 2.92 dBW/kg

Additional information:
position or distance of DUT to SAM: 0mm
ambient temperature: 22.6°C; liquid temperature: 22.0°C

Annex B.10: LTE FDD 13

Date/Time: 19.03.2014 13:51:46

FCC_EN62209-2-LTE FDD 13 body

DUT: Sony; Type: -/-; Serial: CB5126DPUK
Communication System: UID 0, LTE FDD (0); Communication System Band: LTE 13 (700MHz); Frequency: 782 MHz; Communication System PAR: 0 dB; PMF: 1
Medium parameters used: f = 782 MHz; σ = 0.991 S/m; ε_r = 54.086; ρ = 1000 kg/m^3
Phantom section: Flat Section
Measurement Standard: DASY5
DASY5 Configuration:
- Probe: ES3DV3 - SN3320; ConvF(6.36, 6.36, 6.36); Calibrated: 04.06.2013;
- Sensor-Surface: 4mm (Mechanical Surface Detection (Locations From Previous Scan Used)), Sensor-Surface: 4mm (Mechanical Surface Detection), z = 2.0, 32.0
- Electronics: DAE3 Sn413; Calibrated: 16.01.2014
- Phantom: ELI 4.0; Type: QDOVA001BA; Serial: 1046
- DASY52 52.8.7(1137); SEMCAD X 14.6.10(7164)

MSL750 - QPSK - 10MHz BW - 25RB - backoff power/Rear Position - Mid - 12RB offset - 0mm/Area Scan (151x211x1): Interpolated grid: dx=1.500 mm, dy=1.500 mm

Maximum value of SAR (interpolated) = 0.941 W/kg

MSL750 - QPSK - 10MHz BW - 25RB - backoff power/Rear Position - Mid - 12RB offset - 0mm/Zoom Scan (5x5x7)/Cube 0: Measurement grid: dx=7.5mm, dy=7.5mm, dz=5mm

Reference Value = 28.317 V/m; Power Drift = 0.07 dB
Peak SAR (extrapolated) = 2.44 W/kg
SAR(1 g) = 0.891 W/kg; SAR(10 g) = 0.424 W/kg
Maximum value of SAR (measured) = 1.02 W/kg

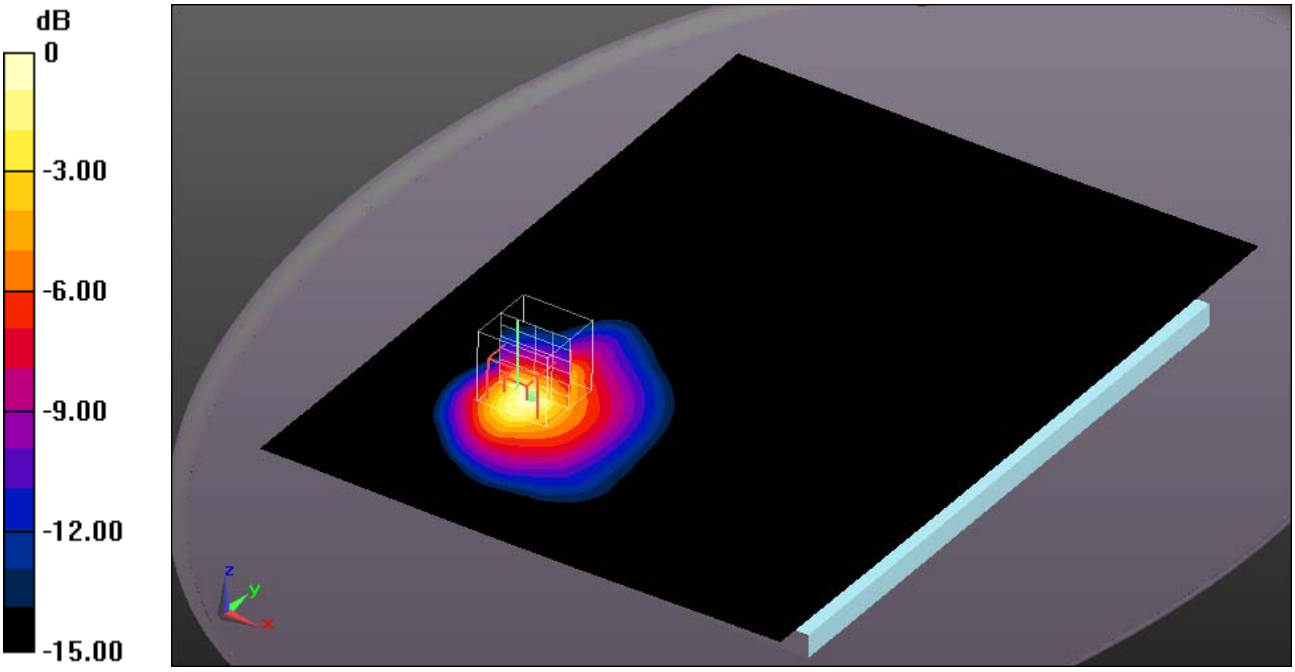

0 dB = 1.02 W/kg = 0.09 dBW/kg

Additional information:
position or distance of DUT to SAM: 0mm
ambient temperature: 22.2°C; liquid temperature: 21.8°C

Date/Time: 19.03.2014 14:33:02

FCC_EN62209-2-LTE FDD 13 body

DUT: Sony; Type: -/-; Serial: CB5126DPUK
Communication System: UID 0, LTE FDD (0); Communication System Band: LTE 13 (700MHz); Frequency: 782 MHz; Communication System PAR: 0 dB; PMF: 1
Medium parameters used: f = 782 MHz; σ = 0.991 S/m; ε_r = 54.086; ρ = 1000 kg/m^3
Phantom section: Flat Section
Measurement Standard: DASY5
DASY5 Configuration:
- Probe: ES3DV3 - SN3320; ConvF(6.36, 6.36, 6.36); Calibrated: 04.06.2013;
- Sensor-Surface: 4mm (Mechanical Surface Detection (Locations From Previous Scan Used)), Sensor-Surface: 4mm (Mechanical Surface Detection), z = 2.0, 32.0
- Electronics: DAE3 Sn413; Calibrated: 16.01.2014
- Phantom: ELI 4.0; Type: QDOVA001BA; Serial: 1046
- DASY52 52.8.7(1137); SEMCAD X 14.6.10(7164)

MSL750 - QPSK - 10MHz BW - 50RB - backoff power/Rear Position - Mid - 0RB offset - 0mm/Area Scan (151x211x1): Interpolated grid: dx=1.500 mm, dy=1.500 mm

Maximum value of SAR (interpolated) = 0.922 W/kg

MSL750 - QPSK - 10MHz BW - 50RB - backoff power/Rear Position - Mid - 0RB offset - 0mm/Zoom Scan (5x5x7)/Cube 0: Measurement grid: dx=7.5mm, dy=7.5mm, dz=5mm

Reference Value = 28.280 V/m; Power Drift = 0.09 dB
Peak SAR (extrapolated) = 2.42 W/kg
SAR(1 g) = 0.887 W/kg; SAR(10 g) = 0.426 W/kg
Maximum value of SAR (measured) = 0.995 W/kg

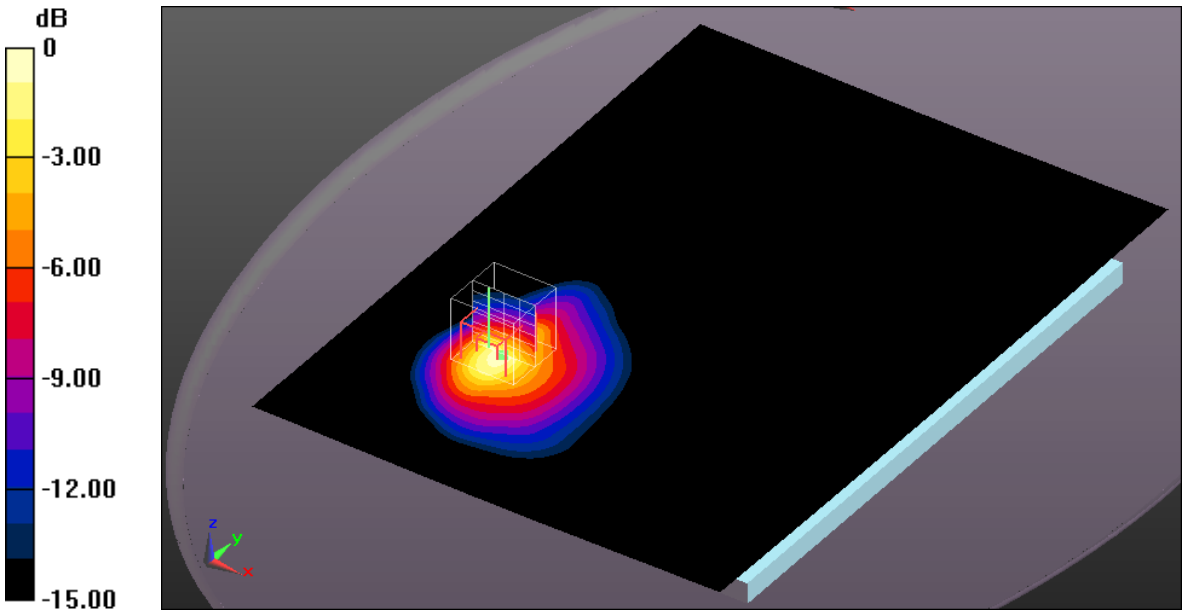

0 dB = 0.995 W/kg = -0.02 dBW/kg

Additional information:
position or distance of DUT to SAM: 0mm
ambient temperature: 22.2°C; liquid temperature: 21.8°C

Annex B.11: WLAN 2450MHz

Date/Time: 17.03.2014 13:58:38

FCC_EN62209-2-WLAN2.4Ghz body

DUT: Sony; Type: -/-; Serial: CB5126DQ3C
Communication System: UID 0, WLAN 2450 (0); Communication System Band: 2.4 GHz; Frequency: 2437 MHz; Communication System PAR: 0 dB; PMF: 1
Medium parameters used: f = 2437 MHz; σ = 1.964 S/m; ε_r = 51.671; ρ = 1000 kg/m^3
Phantom section: Flat Section
Measurement Standard: DASY5
DASY5 Configuration:
- Probe: ES3DV3 - SN3320; ConvF(4.36, 4.36, 4.36); Calibrated: 04.06.2013;
- Sensor-Surface: 4mm (Mechanical Surface Detection (Locations From Previous Scan Used)), Sensor-Surface: 4mm (Mechanical Surface Detection), z = 2.0, 32.0
- Electronics: DAE3 Sn413; Calibrated: 16.01.2014
- Phantom: ELI 4.0; Type: QDOVA001BA; Serial: 1046
- DASY52 52.8.7(1137); SEMCAD X 14.6.10(7164)

MSL2450_2600/Rear Position - Mid - 0mm/Area Scan (221x311x1): Interpolated grid: dx=1.000 mm, dy=1.000 mm

Maximum value of SAR (interpolated) = 0.603 W/kg

MSL2450_2600/Rear Position - Mid - 0mm/Zoom Scan (7x7x7)/Cube 0:

Measurement grid: dx=5mm, dy=5mm, dz=5mm
Reference Value = 17.995 V/m; Power Drift = -0.02 dB
Peak SAR (extrapolated) = 1.70 W/kg
SAR(1 g) = 0.526 W/kg; SAR(10 g) = 0.181 W/kg
Maximum value of SAR (measured) = 0.617 W/kg

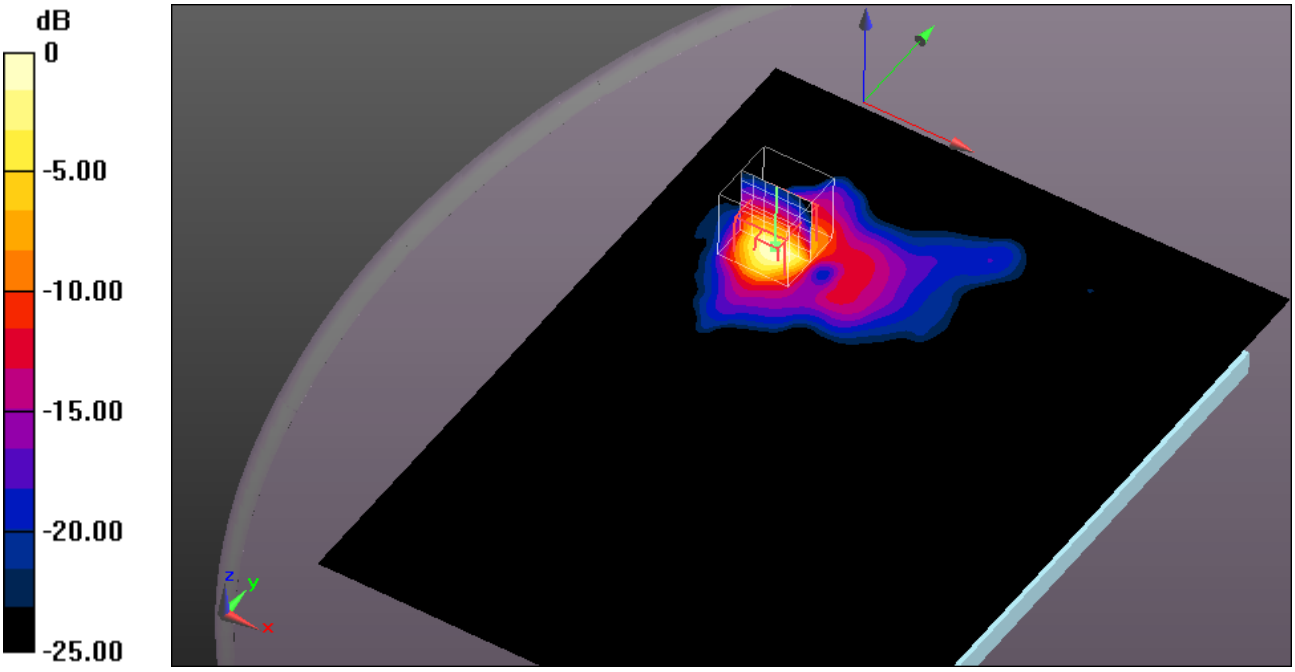

0 dB = 0.617 W/kg = -2.10 dBW/kg

Additional information:
position or distance of DUT to SAM : 0 mm
ambient temperature: 22.5°C; liquid temperature: 21.9°C

Annex B.12: WLAN 5GHz

Date/Time: 19.03.2014 21:38:56

FCC_EN62209-2-WLAN5GHz-body

DUT: Sony; Type: -/-; Serial: CB5126DQ3C
Communication System: UID 0, WLAN 5GHz (0); Communication System Band: 5 GHz Band; Frequency: 5680 MHz; Communication System PAR: 0 dB; PMF: 1
Medium parameters used: f = 5680 MHz; σ = 5.826 S/m; ε_r = 47.272; ρ = 1000 kg/m^3
Phantom section: Flat Section
Measurement Standard: DASY5
DASY5 Configuration:
- Probe: EX3DV4 - SN3944; ConvF(4.33, 4.33, 4.33); Calibrated: 02.08.2013;
- Sensor-Surface: 2mm (Mechanical Surface Detection (Locations From Previous Scan Used)), Sensor-Surface: 2mm (Mechanical Surface Detection), z = 1.0, 23.0
- Electronics: DAE3 Sn413; Calibrated: 16.01.2014
- Phantom: ELI 4.0; Type: QDOVA001BA; Serial: 1046
- DASY52 52.8.7(1137); SEMCAD X 14.6.10(7164)

MSL5GHz/Rear Position - Ch136 - 0mm/Area Scan (211x311x1): Interpolated grid: dx=1.000 mm, dy=1.000 mm

Maximum value of SAR (interpolated) = 1.96 W/kg

MSL5GHz/Rear Position - Ch136 - 0mm/Zoom Scan (8x8x12)/Cube 0:

Measurement grid: dx=4mm, dy=4mm, dz=2mm
Reference Value = 15.823 V/m; Power Drift = 0.09 dB
Peak SAR (extrapolated) = 7.95 W/kg
SAR(1 g) = 0.696 W/kg; SAR(10 g) = 0.152 W/kg
Maximum value of SAR (measured) = 1.94 W/kg

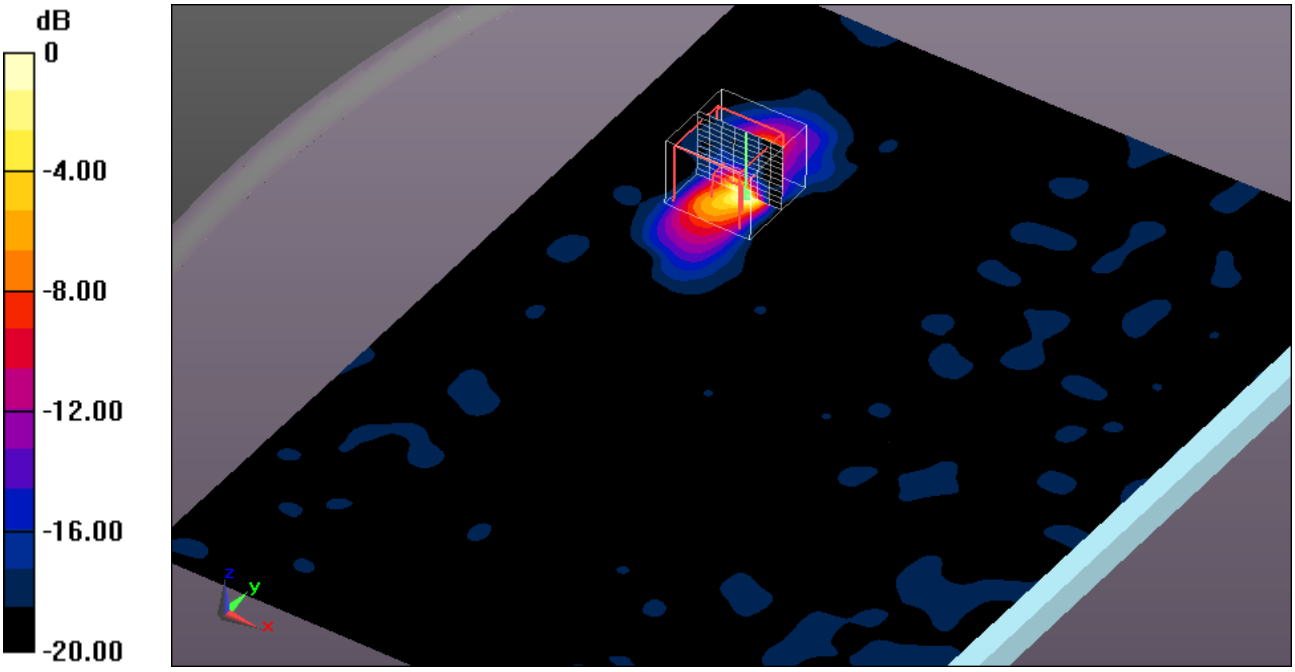

0 dB = 1.94 W/kg = 2.88 dBW/kg

Additional information:
position or distance of DUT to SAM: 0 mm
ambient temperature: 22.5°C; liquid temperature: 21.9°C

Annex B.13: Liquid depth

Photo 1: Liquid depth 750 MHz body simulating liquid

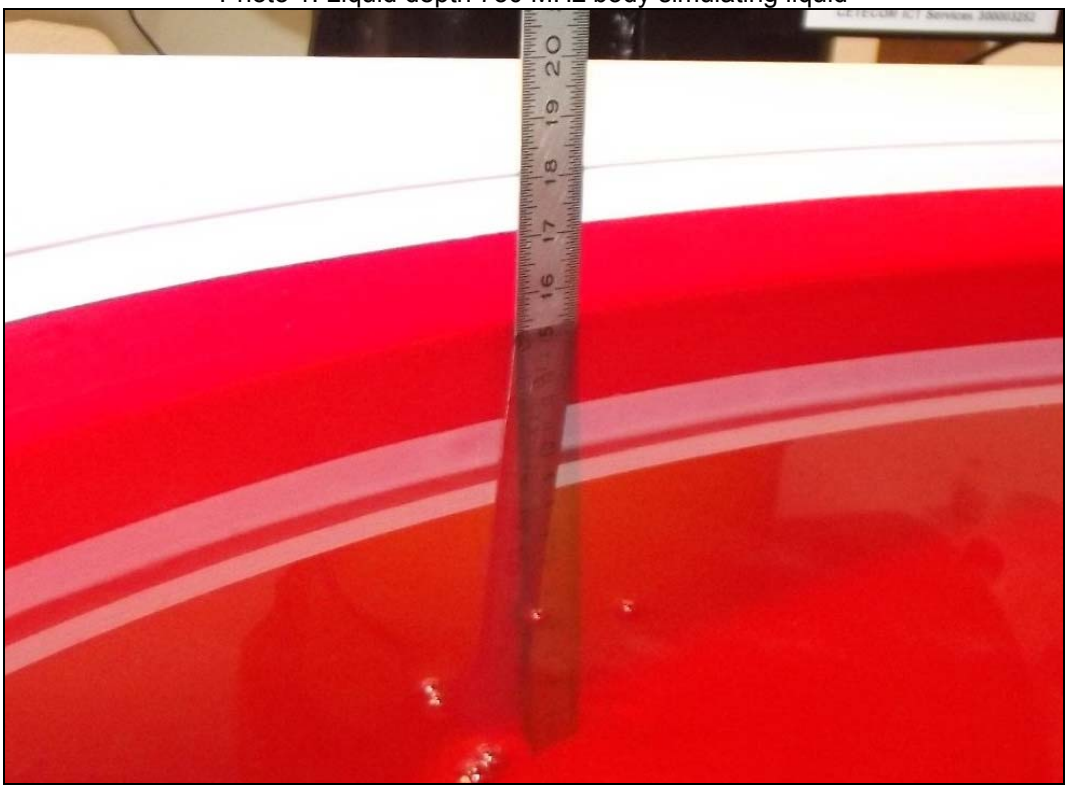

Photo 2: Liquid depth 850 MHz body simulating liquid

Photo 3: Liquid depth 1750 MHz body simulating liquid

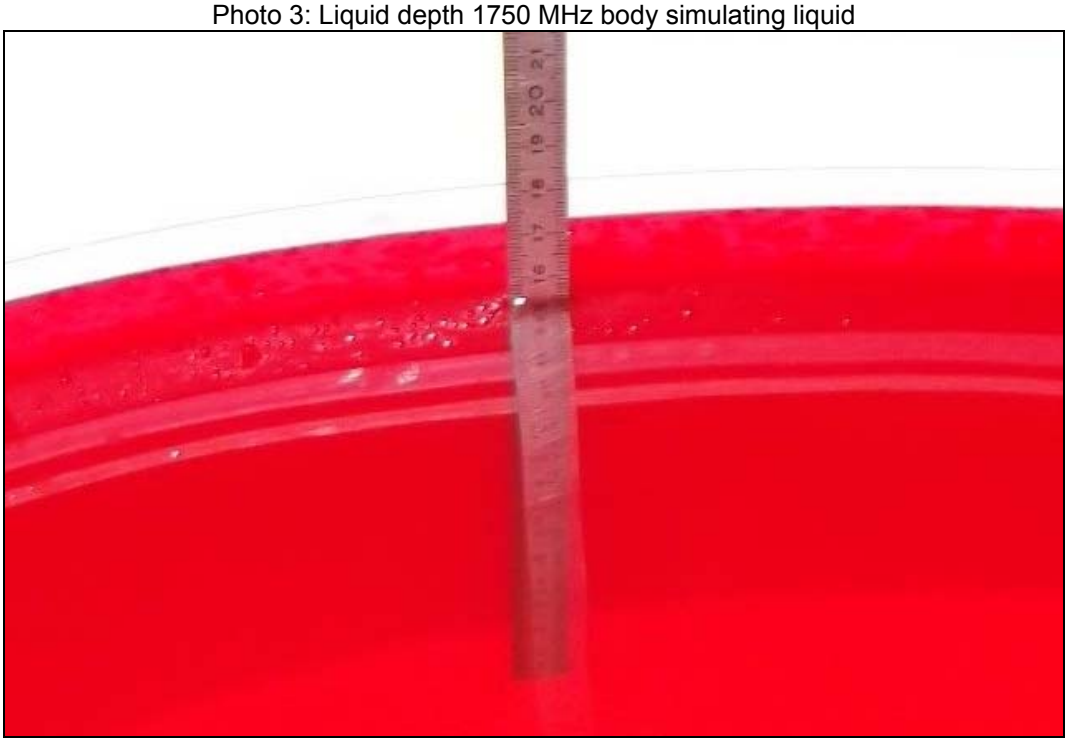

Photo 4: Liquid depth 1900 MHz body simulating liquid

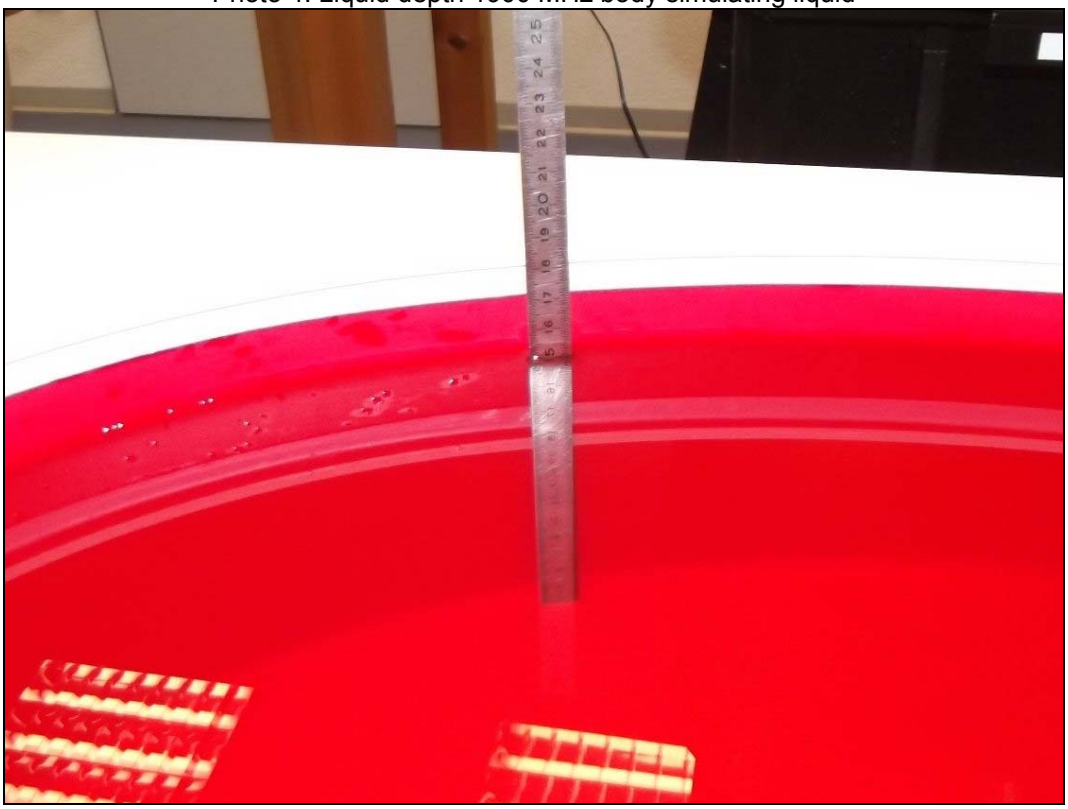

Photo 5: Liquid depth 2450 MHz body simulating liquid

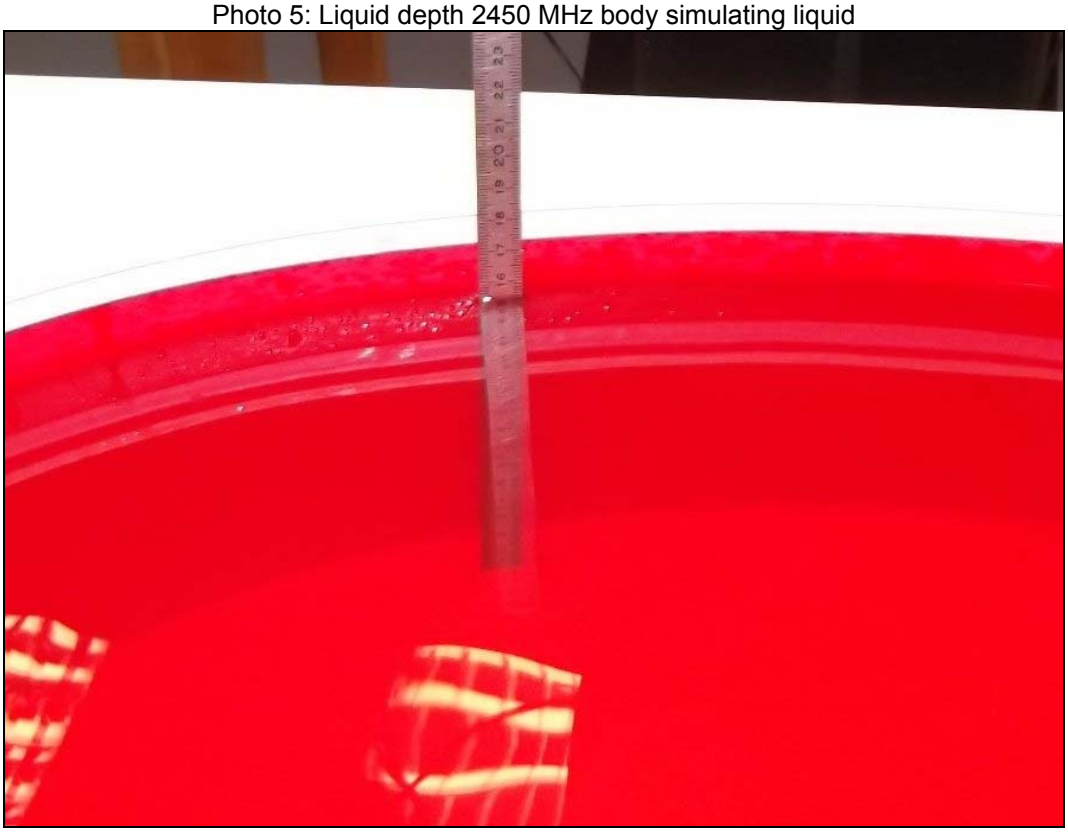

Photo 6: Liquid depth 5 GHz body simulating liquid

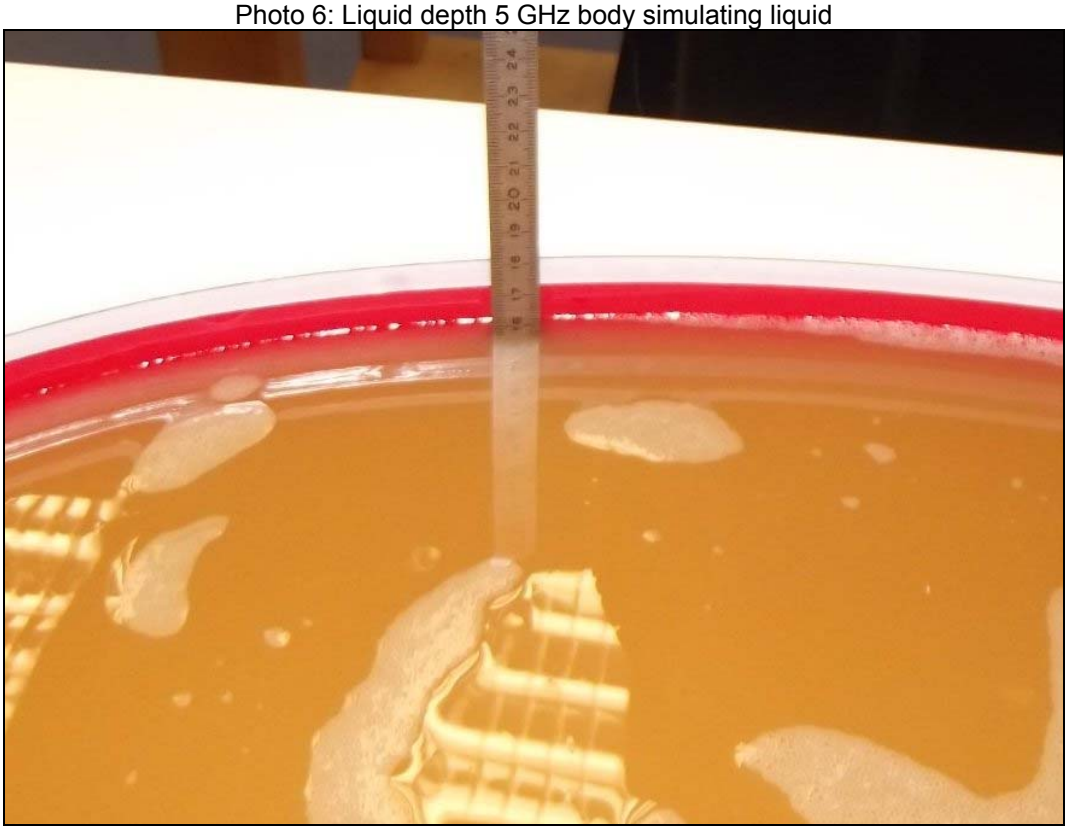

Annex C: Photo documentation

Photo documentation is described in the additional document:

Appendix to test report no. 1-6965/13-14-02-E Photo documentation

Annex D: Calibration parameters

Calibration parameters are described in the additional document:

Appendix to test report no. 1-6965/13-14-02-E
Calibration data, Phantom certificate
and detail information of the DASY5 System

Annex E: Proximity sensor data

According to KDB 616217 D04 SAR for laptop and tablets v01r01 the functionality of the sensors has to be approved for different aspects:

- Triggering distances
- Sensor coverage of the relevant area
- Sensor functionality in tilted positions
- Safety mechanisms in case of sensor Malfunction
- Material dependency of the triggering distances

are described in the additional document:

Appendix to test report no. 1-6965/13-14-02-E
Proximity sensor data

Annex F: LTE – Carrier Aggregation

The system set up and detailed test results are attached in
Appendix to test report no. 1-6965/13-14-02-E LTE – Carrier Aggregation

Annex G: Document History

Version	Applied Changes	Date of Release
	Initial Release	2014-03-21
-A	Removed DTM parts from 2.4Technical details.	2014-03-27
-B	The conducted output power for LTE CA were added in chapter 8.2.14.3 LTE - Carrier Aggregation B2 page 54, 8.2.14.4 LTE - Carrier Aggregation B13 page 55.	2014-07-18
-C	Table of contents was updated.	2014-07-22
-D	Corrected Test standards/ procedures references.	2014-08-11
-E	- Conducted power table for GSM/GPRS updated - Justification for GSM/GPRS SAR measurements (section 8.2.3) updated - MPR information added to LTE conducted power tables - Power drift information added to SAR test result tables - Base station simulator screen shots for carrier aggregation added to Annex F	2014-08-29

Annex H: Further Information

Glossary

BW - Bandwidth
DTS - Distributed Transmission System
DUT - Device under Test
EUT - Equipment under Test
FCC - Federal Communication Commission
FCC ID - Company Identifier at FCC
HW - Hardware
IC - Industry Canada
Inv. No. - Inventory number
LTE - Long Term Evolution
N/A - not applicable
PCE - Personal Consumption Expenditure
OET - Office of Engineering and Technology
RB - resource block(s)
SAR - Specific Absorption Rate
S/N - Serial Number
$SPLSR_i$ - SAR-to-(peak-locations spacing) ratio
SW - Software
UNII - Unlicensed National Information Infrastructure