If you experience a problem that is not noted in this manual, please do not return the product to the store. Our Customer Service Department may have a simple solution to your problem. Please contact us at 1-800-268-6237 or email us at summerinfant.com/contact.

FCC Information
This device complies with part 15 of the FCC Rules. Operation is subject to the following two conditions: (1) This device may not cause harmful interference,
and (2) this device must accept any interference received, including interference that may cause undesired operation.

CAUTION: Changes or modifications not expressly approved by Summer Infant may void the users authority to operate this equipment.

NOTE: This equipment has been tested and found to comply with the limits for a Class B digital device, pursuant to part 15 of the FCC Rules. These limits are designed to provide reasonable protection against harmful interference in a residential installation. This equipment generates, uses and can radiate radio frequency energy and, if not installed and used in accordance with the instructions, may cause harmful interference to radio communications. However, there is no guarantee that interference will not occur in a particular installation. If this equipment does cause harmful interference to radio or television reception, which can be determined by turning the equipment off and on, the user is encouraged to try to correct the interference by one or more of the following measures:

- Reorient or relocate the receiver
- Increase the separation between the equipment and the receiver
- Connect the equipment into an outlet on a circuit different from that to which the receiver is connected.
- Consult the dealer or an experienced radio/TV technician for help

CAUTION: 1. To comply with FCC RF exposure compliance requirements, a separation distance of at least 20 cm must be maintained between the antenna of this device and all persons. 2. This transmitter must not be co-located or operating in conjunction with any other antenna or transmitter.

Summer Infant, Inc. Monitor Warranty Policy
Summer Infant, Inc. will repair or replace (at our option) your unit free of charge for 12 months from the date of purchase if the unit is defective in workmanship or materials. To claim your repair/replacement, the product must be returned to Summer Infant along with a copy of the original purchase receipt. In the absence of the purchase receipt, the warranty will be 12 months from the date of manufacture. This warranty does not apply to normal wear or damage from misuse, abuse, improper storage and handling, installation, accident, unauthorized repair or alteration. Please contact our Customer Service Department by phone at 1-800-268-6237 or via e-mail at summerinfant.com/contact for details.

We **LOVE** our consumers!
Get to know us at:
www.summerinfant.com
Summer Infant stands behind all of its products.
If you are not completely satisfied or have any questions, please contact our Consumer Relations Team at
1-800-268-6237 or **www.summerinfant.com/contact**
connect with us:

Summer Infant, Inc.
1275 Park East Drive
Woonsocket, RI 02895 USA
1-800-268-6237

© 2014 Summer Infant, Inc.
Colors and styles may vary.
Please retain information for future reference.
MADE IN CHINA. 3/14

732-2897000-0700

28970

Please read the following instructions and warnings carefully.

Keep this instruction manual for future reference.

Tools required for wall mount: Screwdriver and drill (not included)

For technical support see back page.

For adult use only.

⚠ WARNING:
Adult assembly required.
Keep small parts away from children when assembling.

BC

INSTRUCTION MANUAL

SIDE BY SIDE™ SPLIT-SCREEN VIDEO MONITOR SET

⚠ WARNING:

STRANGULATION HAZARD - Children have STRANGLED in cords. Keep this cord out of reach of children (more than 3 feet (0.9 m) away from the crib). Use enclosed Security Clips to help secure cord away from baby's reach. Never use extension cords with AC Adapters. Only use the AC Adapters provided.

⚠ WARNING:

THIS PRODUCT CANNOT REPLACE RESPONSIBLE ADULT SUPERVISION.

- **STRANGULATION HAZARD** - Children have STRANGLED in cords. Keep this cord out of reach of children (more than 3 feet (0.9 m) away from the crib). Use enclosed Security Clips to help secure cord away from baby's reach. Never use extension cords with AC Adapters. Only use the AC Adapters provided.
- When an AC Adapter is plugged into an electrical outlet, do not touch the exposed end.
- Test monitor before first use, periodically, and when changing location of the Camera.
- Do not use monitor near water (such as bathtub, sink, etc.).
- Keep monitor away from heat sources (such as stoves, radiators, etc.).
- Make sure there is proper ventilation around all monitor components. Do not place on sofas, cushions, beds, etc. which may block ventilation.
- This product is not a toy. Do not allow children to play with it.
- This product contains small parts. Adult assembly required. Exercise care when unpacking and assembling the product.

⚠ BATTERY WARNING:

- Use only the original rechargeable battery provided. Please contact Summer Infant, Inc. for replacement battery. Contact information can be found on page 8 of these instructions or on the battery itself.
- Clean battery and product contacts prior to battery installation.
- Do not short-circuit supply terminals.
- Only the recommended battery or equivalent are to be used, volts and size.
- Remove battery when product is stored for long periods of time or when battery is exhausted.
- Dispose of exhausted battery properly.
- Keep all batteries away from children.

CAUTION
RISK OF ELECTRIC SHOCK
DO NOT OPEN
DO NOT EXPOSE TO RAIN OR MOISTURE

IMPORTANT SAFETY INSTRUCTIONS

1) Read Instructions - All the safety and operating instructions should be read before the product is operated.
2) Retain Instructions - The safety and operating instructions should be retained for future reference.
3) Heed Warnings - All warnings on the product and in the operating instructions should be adhered to.
4) Follow Instructions - All operating and use instructions should be followed.
5) Cleaning - Unplug this product from the wall outlet before cleaning. Do not use liquid cleaners or aerosol cleaners. Use a damp cloth for cleaning.
6) Attachments - Do not use attachments not recommended by the product manufacturer as they may cause hazards.
7) Water and Moisture - Do not use this product near water - for example, near a bath tub, wash bowl, kitchen sink, or laundry tub; in a wet basement; or near a swimming pool; and the like.
8) Accessories - Do not place this product on an unstable cart, stand, tripod, bracket, or table. The product may fall, causing serious injury to a child or adult, and serious damage to the product. Use only with a cart, stand, tripod, bracket, or table recommended by the manufacturer, or sold with the product. Any mounting of the product should follow the manufacturer's instructions, and should use a mounting accessory recommended by the manufacturer.
9) Ventilation - Slots and openings in the cabinet are provided for ventilation and to ensure reliable operation of the product and to protect it from overheating, and these openings must not be blocked or covered. The openings should never be blocked by placing the product on a bed, sofa, rug, or other similar surfaces. This product should not be placed in a built-in installation such as a bookcase or rack unless proper ventilation is provided or the manufacturer's instructions have been adhered to.
10) Power Sources - This product should be operated only from the type of power source indicated on the marking label. If you are not sure of the type of power supply to your home, consult your product dealer or local power company. For products intended to operate from battery power, or other sources, refer to the operating instructions.
11) Power-Cord Protection - Power-supply cords should be routed so that they are not likely to be walked on or pinched by items placed upon or against them, paying particular attention to cords at plugs, convenience receptacles, and the point where they exit from the product.
12) Power Lines - An outside antenna system should not be located in the vicinity of overhead power lines or other electric light or power circuits, or where it can fall into such power lines or circuits. When installing an outside antenna system, extreme care should be taken to keep from touching such power lines or circuits as contact with them might be fatal.
13) Overloading - Do not overload wall outlets, extension cords, or integral convenience receptacles as this can result in a risk of fire or electric shock.
14) Object and Liquid Entry - Never push objects of any kind into this product through openings as they may touch dangerous voltage points or short-out parts that could result in a fire or electric shock. Never spill liquid of any kind on the product.
15) Servicing - Do not attempt to service this product yourself as opening or removing covers may expose you to dangerous voltage or other hazards. Refer all servicing to qualified service personnel.
16) Damage Requiring Service - Unplug this product from the wall outlet and refer servicing to qualified service personnel under the following conditions:
    a) When the power-supply cord or plug is damaged,
    b) If liquid has been spilled, or objects have fallen into the product,
    c) If the product has been exposed to rain or water,
    d) If the product does not operate normally by following the operating instructions. Adjusting only those controls that are covered by the operating instructions as an improper adjustment of other controls may result in damage and will often require extensive work by a qualified technician to restore the product to its normal operation,
    e) If the product has been dropped or damaged in any way, and
    f) When the product exhibits a distinct change in performance - this indicated a need for service.
17) Replacement Parts - When replacement parts are required, be sure the service technician has used replacement parts specified by the manufacturer or have the same characteristics as the original part. Unauthorized substitutions may result in fire, electric shock, or other hazards.
18) Safety Check - Upon completion of any service or repairs to this product, ask the service technician to perform safety checks to determine that the product is in proper operating condition.
19) Wall or Ceiling Mounting - The product should be mounted to a wall or ceiling only as recommended by the manufacturer.
20) Heat - The product should be situated away from heat sources such as radiators, heat registers, stoves, or other products (including amplifiers) that produce heat.

MONITOR FEATURES (continued):

• **Pan/scan/zoom:** Remotely control the camera to see more of the baby's room and help keep a mobile baby in view. The pan and scan features allows you to move the camera left and right, and up and down. Multi-level zoom enables you to change the level of zoom for increasingly closer views on screen, up to 3x normal screen view.

• **Two-way communication:** Calm baby with the sound of your voice or use talk as a convenient way to remind each other of something needed from the nursery. By speaking into the monitor your voice is projected through the camera, so you can give comfort and reassurance, or gentle reminders, from another room.

• **Automatic night vision:** Rest assured knowing you can see your baby day and night, including overnight, with automatic night vision. Infrared LEDs automatically adjust to the level of light in the room and transmit a clear black and white image in low-light and darkened room conditions.

• **Power-save Mode:** While operating on battery power, the video screen will go to sleep, to conserve battery power. Audio and sound lights continue to function normally. With a simple, one-touch of the video on/off button, video resumes on screen.

• **Alert Indicators:** If the monitor is too far away from the camera or the battery is low, the monitor will emit 3 consecutive beeps to alert parent. The beeps will continue until the monitor is moved within range of the camera or it is plugged in.

• **Adjustable volume & brightness:** Volume adjustments allow higher volume settings to hear every little sound, while lower volume settings monitor the louder sounds and cries from baby. Brightness can be adjusted, as well, based on the level of light in the room. Press the Menu/Power button, then using the up and down arrows on the front of the monitor, adjust the brightness for lighter or darker video.

• **Sound lights:** The video monitor lets you not only hear baby but with sound activated lights, parents can "see" when sound is coming from baby's room. The lights are displayed on a color bar above the video screen, and change color, from green to amber to red, as the sound level increases.

TROUBLESHOOTING:

No picture or sound
- Make sure the camera and monitor are paired (see page 5)
- Make sure the camera and monitor are turned on
- Make sure the AC adapters are plugged in
- Make sure the outlets are working

Sound but no picture
- Press the Video On-Off Button once to turn on video mode
- Check to make sure nothing is blocking the camera
- Test reception by moving the monitor and/or camera to different locations
- Make sure the camera and monitor are paired (see page 5)

Picture but no sound
- Power the monitor completely off, remove and re-insert the battery, then turn monitor back on.
- Turn up the volume using Volume Control
- Make sure the camera and monitor are paired (see page 5)

Picture not clear
- Position the monitor closer to the camera
- Move the monitor away from other electronic devices, cordless phones, etc.
- Adjust the brightness using the Brightness Control
- Test reception by moving the monitor and/or camera to different locations

Squealing sound coming from speaker on Monitor
- Move the monitor and camera further away from each other
- Turn the volume down using Volume Control
- Power the monitor completely off, remove and re-insert the battery, then turn monitor back on.

REPLACEMENT PARTS AND PRODUCT REGISTRATION

If you need to order a replacement part or want to order an Extra Camera, you can contact our Customer Relations Department at **1-800-268-6237** or via email at **www.summerinfant.com/contact**

- Extra Camera: #28900
- Rechargeable Lithium ION 3.7V: #02800-10
- Camera AC Adapter: #02000-05
- Monitor AC Adapter: #28450-13

To register your product, visit:
www.summerinfant.com/product-registration/product-registration-form

FEATURES & COMPONENTS:

MONITOR:

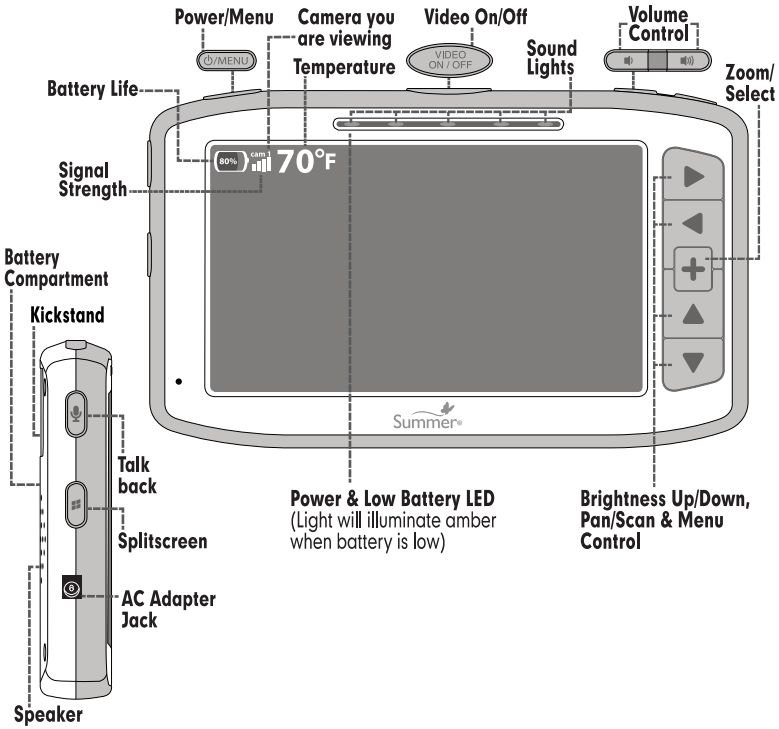

CAMERA:

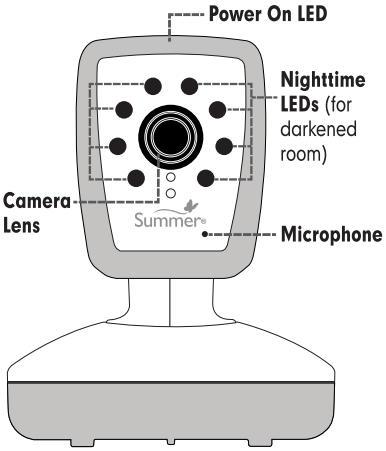

CAMERA (Back View)**:**

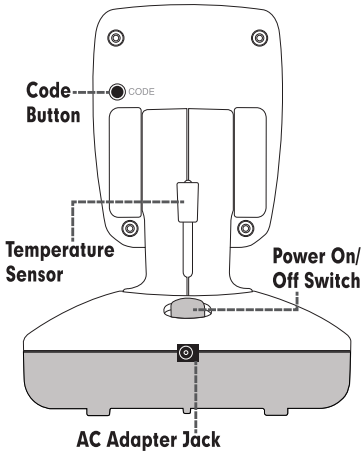

Adapters and Hardware:

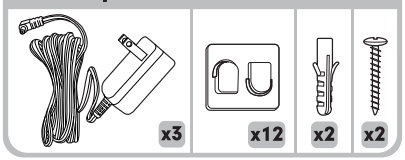

SETUP & USE:

⚠ WARNING:

STRANGULATION HAZARD - Children have STRANGLED in cords. Keep this cord out of reach of children (more than 3 feet (0.9 m) away from the crib). Use enclosed Security Clips to help secure cord away from baby's reach. Never use extension cords with AC Adapters. Only use the AC Adapters provided.

Testing Initial Setup:
Before using the monitor, **charge the battery for 4-5 hours**. To set up the system, you will need two adults. One adult should view the picture on the monitor while the other is in the nursery to adjust the camera. Often the quality of the reception can be improved by slightly repositioning the camera or the monitor. If may help to place an object in the crib to simulate the position and size of your baby.

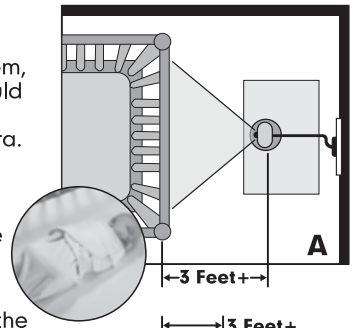

Step 1: To test reception, determine a location for the camera that will provide the best view of your baby in the crib (note: do not mount camera in permanent location until initial set up test completed). Plug AC adapter into wall outlet and turn camera power on.
Step 2: Press and hold POWER/MENU button on monitor for 4-seconds until the Summer logo appears on screen. Video should immediately appear on screen. If video does not appear, go to "Pairing Monitor and Camera" section (pg. 5). If video appears, the initial set up test is complete.

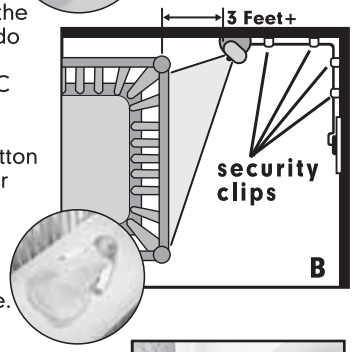

Installing Camera:
Place the camera on a flat surface, such as a bureau
or shelf (Fig A) or mount the camera on a wall (Fig B). NEVER place the camera or cords within 3-feet of the crib. Secure the cord to the wall using the 6 security clips included to keep the cord away from baby's reach.

To Wall-Mount Camera:

Step 1: Pre-drill a hole in the wall, a 3/16" (4.8mm) drill bit (Fig C).
Step 2: Insert the wall anchor (included) into the hole and with a hammer, tap gently on the end until the wall anchor is flush with the wall.
Step 3: Insert the screw (included) into the wall anchor and tighten screw until only ¼" (6.2mm) of the screw is exposed.
Step 4: Insert camera AC adapter into the camera's AC adapter jack.
Step 5: Slide the back of the camera down onto the screw until the camera is secure to the wall.
Step 6: Plug the AC adapter into a standard electrical outlet.
Step 7: Secure the cord to the wall using the **6 security clips** included to keep cord away from baby's reach. (Figures B & D)

SETUP & USE (continued):

Monitor:

To Use in Video & Audio Mode
Step 1: Place the monitor in the room from which you want to monitor your baby (ie., bedroom or living room). Plug the monitor AC adapter into the AC adapter jack and other end into standard electrical outlet.
Step 2: Press and hold POWER/MENU button for 4-seconds until the Summer logo or video appears on screen.
Step 3: For audio and no video, press the VIDEO ON/OFF button top of the unit.
Step 4: To turn the monitor off completely, press and hold the POWER/MENU button for 4 seconds.

To Use in Portable/Battery Mode:
Step 1: Before using the monitor in portable mode (battery), charge the battery for 4-5 hours.
Step 2: To charge the battery, plug the monitor adapter into the monitor AC adapter jack. Plug the other end into a standard electrical outlet.
Step 3: After initial 4-5 hour charge, to achieve optimal battery life, charge the battery overnight and use in battery-mode during daytime monitoring, for up to 6 hours of continuous use.

When battery is low, the Power-On LED will also illuminate amber indicating that the battery needs to be charged.

Pairing Monitor and Camera:
The monitor and the camera are paired at the factory for privacy reasons. If the monitor and camera are not paired with each other for any reason, follow steps to pair:

Step 1: Move the monitor to the same area as the camera and make sure both are turned on.
Step 2: Press "MENU/POWER⏻" button. Use the right arrow to highlight the CAM MENU ICON (📹).
Step 3: Use the up arrow to highlight the "ADD CAM" (➕📹) menu. Press ZOOM/SELECT to enter ADD CAM menu.
Step 4: The next available camera (📹 **2 3 4**) will automatically be highlighted. Press ZOOM/SELECT to begin pairing.
Step 5: Within 20 seconds, press the "CODE" button on the back of the camera head and live video will appear once the camera is successfully paired.

If this is unsuccessful, you should repeat steps above making sure the camera and monitor are close enough to each other for pairing.

ADDING ADDITIONAL CAMERA:

Note: This product accepts up to 4 cameras and operates on audio and video auto-scan to view each camera on an 8-second rotation when not in split-screen mode. To order an additional camera (item #28900), please contact our Consumer Relations Team by phone at: 1-800-268-6237 or online at: www.summerinfant.com/contact for details.

MONITOR FEATURES:

• **Split-screen:** Split-screen technology enables viewing more than one room on screen simultaneously, helpful for parents who want to keep multiple children in view at the same time.Audio is transmitted from one room in split-screen mode, parents can manually move from room to room to hear audio from each by using the left and right, and up and down arrows to move the orange line highlighting the room transmitting audio. The option for auto-scan between rooms is always available, providing a full view of each room, with the video and audio from each room on screen on an 8-second rotation between rooms. Auto-scan is recommended for overnight to ensure parents receive audio from all rooms being monitored.
• **Temperature display:** Monitoring the temperature in baby's room is important for parents. They want to know baby is comfortable and the on-screen display provides a convenient way for them to see this and if the room gets too hot or too color they can adjust the temperature.

IC Warning:

This device complies with Industry Canada licence-exempt RSS standard(s). Operation is subject to the following two conditions: (1) this device may not cause interference, and (2) this device must accept any interference, including interference that may cause undesired operation of the device.

Le présent appareil est conforme aux CNR d'Industrie Canada applicables aux appareils radio exempts de licence. L'exploitation est autorisée aux deux conditions suivantes:
(1) l'appareil ne doit pas produire de brouillage, et
(2) l'utilisateur de l'appareil doit accepter tout brouillage radioélectrique subi, même si le brouillage est susceptible d'en compromettre le fonctionnement.

Under Industry Canada regulations, this radio transmitter may only operate using an antenna of a type and maximum (or lesser) gain approved for the transmitter by Industry Canada. To reduce potential radio interference to other users, the antenna type and its gain should be so chosen that the equivalent isotropically radiated power (e.i.r.p.) is not more than that necessary for successful communication.

Conformément à la réglementation d'Industrie Canada, le présent émetteur radio peut fonctionner avec une antenne d'un type et d'un gain maximal (ou inférieur) approuvé pour l'émetteur par Industrie Canada. Dans le but de réduire les risques de brouillage radioélectrique à l'intention des autres utilisateurs, il faut choisir le type d'antenne et son gain de sorte que la puissance isotrope rayonnée équivalente (p.i.r.e.) ne dépasse pas l'intensité nécessaire à l'établissement d'une communication satisfaisante.