SURE SIGHT™ 2.0

digital color video monitor

digital privacy · zoom · night light

Thank you for purchasing the Sure Sight™ 2.0 Digital Color Video Monitor by Summer Infant. This quick start guide will illustrate the few simple steps to get your device up and running.

SET-UP 1

Charge the Handheld

Charge for 4-5 hours.

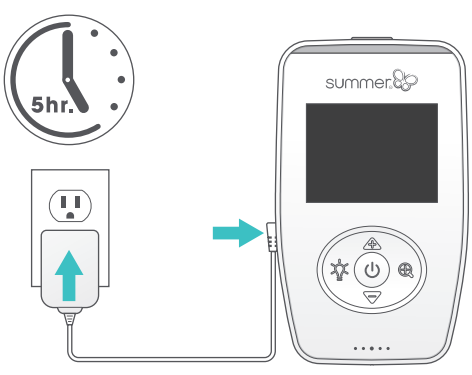

Install the Camera

Plug in camera. Place camera on a flat surface, such as a bureau or shelf or mount the camera on a wall using the screw and wall anchor provided.

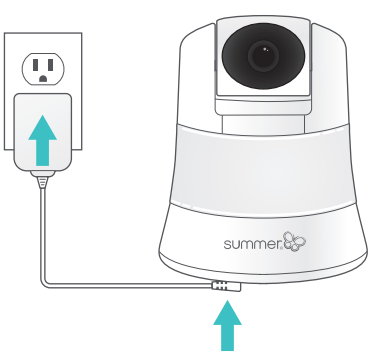

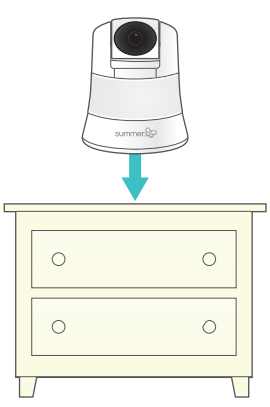

tabletop

or

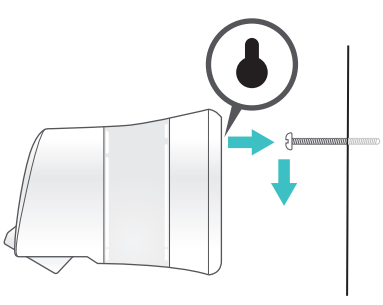

wall mount

Secure the Camera Cord

NEVER place the camera or cords within 3-feet of the crib. Secure the cord to your wall using the 6 security clips included to keep the cord away from baby's reach.

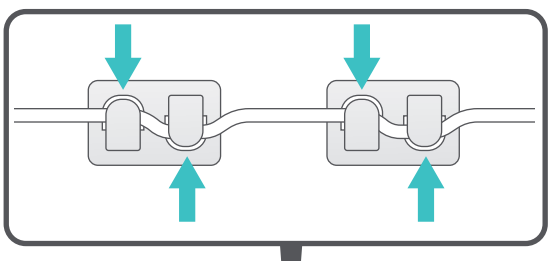

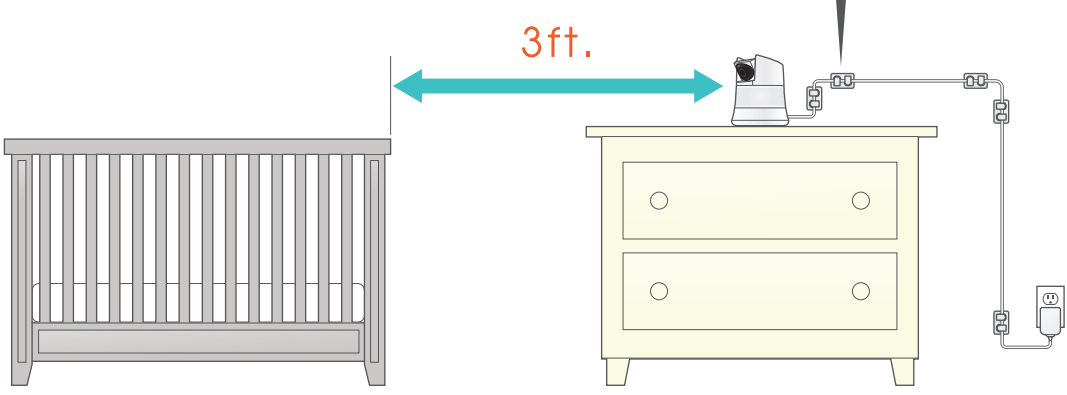

Read all warnings prior to using this product.

⚠ WARNING

STRANGULATION HAZARD: Children have strangled in cords. Keep this cord out of the reach of children (more than 3 ft. (0.9m) away).

Power on the Camera and Handheld

Press the ON/OFF/Nightlight button on the **camera** and hold for 3 seconds. A green light will appear near the lens.

Press and hold the power button on the **handheld** unit for 3 seconds. The handheld will automatically sync with the camera. *(The handheld unit and the camera are paired at the factory for privacy reasons. If the handheld and camera are not paired with each other for any reason, see pairing section in the menu guide.)*

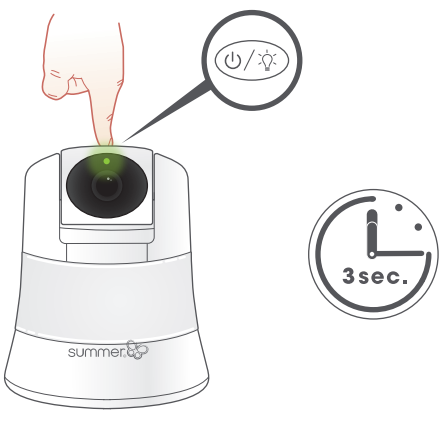

Congratulation You are now ready to use your Sure Sight 2.0™ Digital Color Video Monitor!

SCREEN ICONS & FUNCTION BUTTONS 2

Screen Icons

- Battery Life
- Current Viewing Camera (1-4)
- Reception
- Nightlight On

Function Buttons

- Video ON/OFF
- Power/Menu
- Zoom
- Up
- Down
- Nightlight On/Off

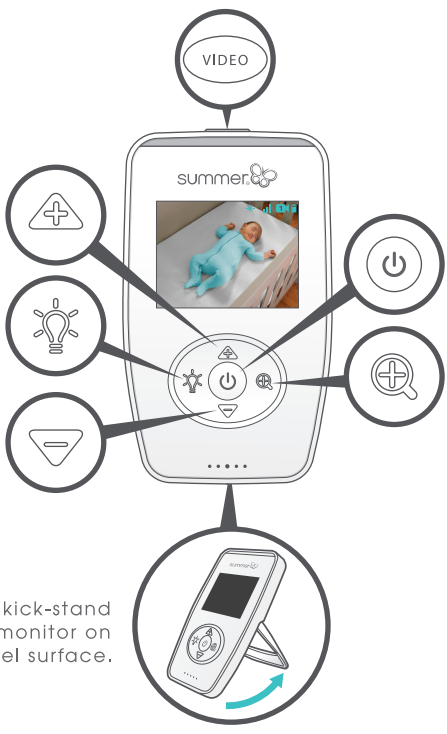

Flip out the kick-stand and place the monitor on a stable, level surface.

USING THE HANDHELD 3

Nightlight

Press the nightlight button on the handheld to activate the soft glow nightlight on the camera. Press the button again to turn the nightlight off.

The nightlight can be turned on or off from the camera by pressing the ON/OFF/Nightlight button.

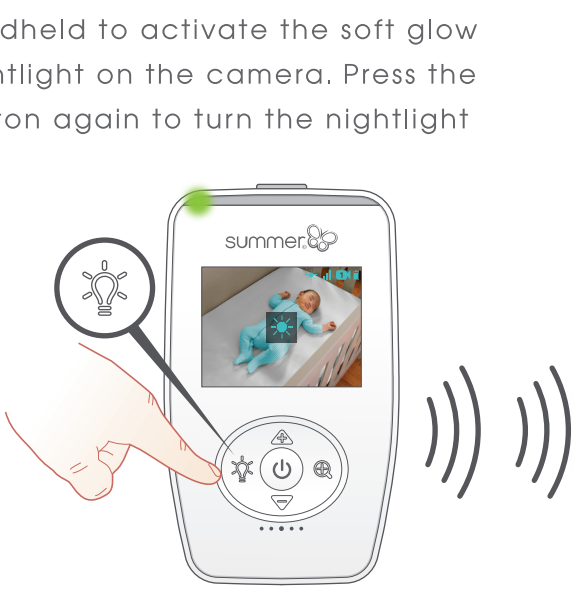

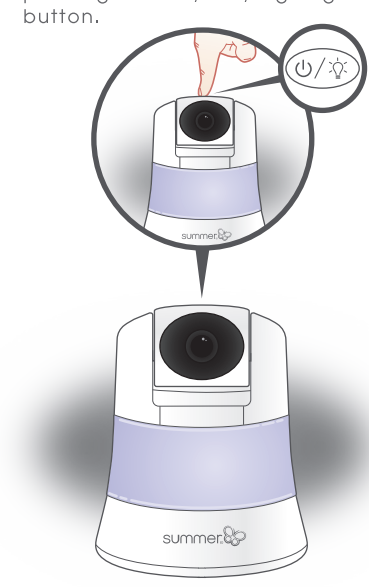

Zoom

Press the zoom button to magnify the screen. Press the button again to zoom out.

Sound Activated Lights

The LED light bar on the top of the handheld will light up as it picks up noises. Softer sounds will light up the green LEDs. Louder noises will light up the red LEDs.

Video On/Off

Turn off the handheld's video by pressing the VIDEO button. The screen will go dark. This feature allows you to preserve battery life when not plugged into A/C adapter. The audio feature will remain activated allowing you to monitor sounds. Press the button again to resume video monitoring.

For understanding Menu features including: adjusting brightness, scan, select camera, delete camera, pair, and exit menu, plese refer to the user's guide.

FCC Caution:

Any Changes or modifications not expressly approved by the party responsible for compliance could void the user's authority to operate the equipment.
This device complies with part 15 of the FCC Rules. Operation is subject to the following two conditions: (1) This device may not cause harmful interference, and (2) this device must accept any interference received, including interference that may cause undesired operation.

FCC Radiation Exposure Statement:

This equipment complies with FCC radiation exposure limits set forth for an uncontrolled environment .This equipment should be installed and operated with minimum distance 20cm between the radiator& your body.
This transmitter must not be co-located or operating in conjunction with any other antenna or transmitter.

IC Warning

(1) this device may not cause interference, and
(2) this device must accept any interference, including interference that may cause undesired operation of the device.

Le présent appareil est conforme aux CNR d'Industrie Canada applicables aux appareils radio exempts de licence. L'exploitation est autorisée aux deux conditions suivantes : (1) l'appareil ne doit pas produire de brouillage, et (2) l'utilisateur de l'appareil doit accepter tout brouillage radioélectrique subi, même si le brouillage est susceptible d'en compromettre le fonctionnement

The device is compliance with RF exposure guidelines, users can obtain Canadian information on RF exposure and compliance.The minimum distance from body to use the device is 20cm.
Le présent appareil est conforme
Après examen de ce matériel aux conformité ou aux limites d’intensité de champ RF,
les utilisateurs peuvent sur l’exposition aux radiofréquences et la conformité and compliance d’acquérir les informations correspondantes. La distance minimale du corps à utiliser le dispositif est de 20cm.