model:FO

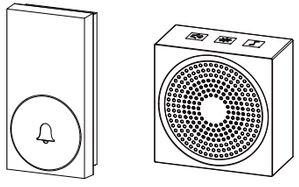

DOORBELL GUIDE

Model:FO-315-US
Model:FO-315-2-US

DOORBELL INSTALLATION

Receiver

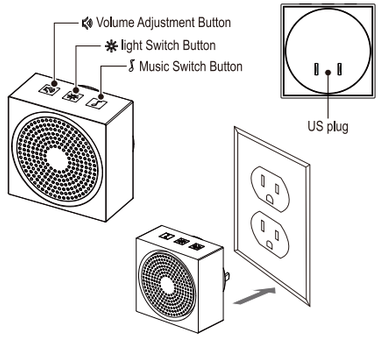

Tip: The recommended installation height is 1.2 meters off the ground.

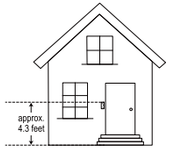

1. Before mounting, test the doorbell range. Press the doorbell button to verify that the doorbell work properly. Use a small flat blade screwdriver to remove the Push Button back plate.

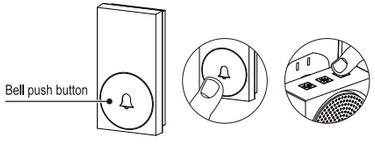

- **Package Contents:**

Model:FO-315-US　　Model:FO-315-2-US

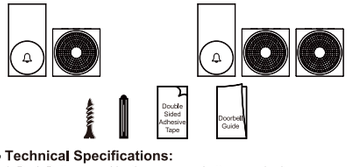

- **Technical Specifications:**
  1. Push Button uses kinetic energy, no battery required.
  2. Doorbell is with LED.
  3. Doorbell offers 59 different ringtones.
  4. Doorbell with volume control.
  5. 180M operating range in the open air.
  6. Power requirements 110V~220V/50Hz Input, with US plug.

- **Installation:**
  Features of technolygy:
  The Push Button can be mounted on door frame.
  The Doorbell should be plug-in the socket for main power supply.

- **How to Pairing:**
  The bell Push Button and Doorbell have been pairing during packaging. If your Doorbell is not working well. You can follow up below 3 steps to reset the product.
  1. Clear the pairing codes inside of the Doorbell. Firstly, press and hold the "Music Switch button", and plug it into the socket until you see the Doorbell's LED flashing and hear Ding Dong, then release the button, reset is completed.
  2. Pairing the Push Button and Doorbell. Press and hold the "Music Switch button" until you hear "Ding-Ding" sound, press the Push Button and you will hear the Doorbell play "Ding" sound, press the "Music Switch button" to exit the paring mode, now you can start using the Doorbell.
  3. Change melody: press the "Music Switch button" to select your desired melody.

- **Trouble shooting:**
  1. Check Doorbell receiver volume, make sure it is not in mute mode.
  2. Check doorbell transmitter and receiver power supply, make sure battery is installed in correct polarity.
  3. Ensure push button is not mounted on metal, near metal studs.
  4. Try a new location for the Doorbell.
  5. If the Doorbell and push button(s) do not operate, disconnect doorbell and push button and pairing them again,please refer to how to pairing process。

2. Drill two holes on the marked locations,then screw the back plate to the wall or use double-sided tape to mount the Push Button.

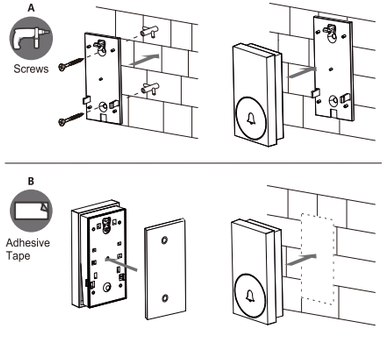

FCC COMPLIANCE STATEMENT:
This device complies with part 15 of the FCC Rules. Operation is subject to the following two conditions:
(1) This device may not cause harmful interference, and
(2) this device must accept any interference received, including interference that may cause undesired operation.

Note: This equipment has been tested and found to comply with the limits for a Class B digital device, pursuant to Part 15 of the FCC Rules. These limits are designed to provide reasonable protection against harmful interference in a residential installation. This equipment generates, uses and can radiate radio frequency energy and, if not installed and used in accordance with the instructions, may cause harmful interference to radio communications.

However, there is no guarantee that interference will not occur in a particular installation. If this equipment does cause harmful interference to radio or television reception, which can be determined by turning the equipment off and on, the user is encouraged to try to correct the interference by one or more of the following measures:

Reorient or relocate the receiving antenna.
Increase the separation between the equipment and receiver.
Connect the equipment into an outlet on a circuit different from that to which the receiver is connected.
Consult the dealer or an experienced radio/TV technician for help.

Warning: Changes or modifications to this unit not expressly approved by the part responsible for compliance could void the user's authority to operate the equipment.

FCC Radiation Exposure Statement
The device has been evaluated to meet general RF exposure requirement.
The device can be used in portable exposure condition without restriction.