OPTICON

H-35
Mobile Computer

Quick Start Guide

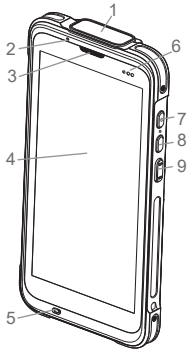

Front View

1. Scan window
2. Information LED
3. Speaker
4. Touch display
5. Microphone
6. Battery status LED
7. Power button
8. Function key
9. Trigger key

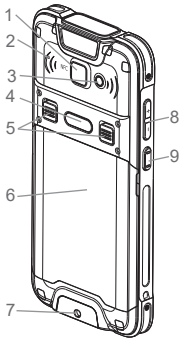

Back View

1. Autofocus camera
2. Microphone
3. Flash light LED
4. Pistol grip connection
5. Battery cover lock
6. Battery cover
7. Hand strap hook
8. Volume buttons
9. Trigger key

Confirm what is in the Box

- H-35
  A mobile computer with a barcode scanning feature.
- USB-C cable
  Charge/Communication cable.
- Rechargeable battery
- Hand strap
- Quick Start Guide
  Provides product information and instructions.

* The number of accessories may differ depending on the product configuration. If any of the accessories are damaged or missing, please contact your local representative.

General View

Bottom View

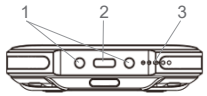

1. Charging pins
2. USB-C connector
3. Speaker

SD/SIM Card Installation

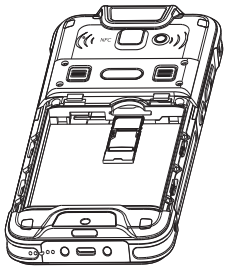

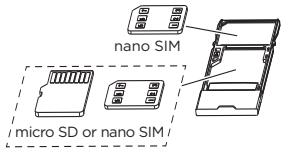

1. Turn off the H-35
2. Remove the battery cover
3. Remove the battery pack
4. Pull downwards the slot card, be careful not to touch the metal parts
5. Insert the micro SD or SIM card into the bottom slot
6. Insert the SIM card into the top slot
7. Re-insert the slot card
8. Insert the battery pack into the battery compartment
9. Close the battery cover and lock the battery cover lock switches

Charging Instructions

Battery Installation

The H-35 battery is initially not fully charged. After installing the battery, please charge it via the USB cable or the charging cradle. By default, the battery is not installed in the H-35 at the factory to avoid damage caused by excessive draining.

Annual replacement of the battery can avoid possible risks or abnormalities and ensure maximum performance. Do not store fully charged or (almost) empty batteries for long periods of time. We recommend charging spare batteries every two to three months to keep its charge at a moderate level to maximize battery life.

Open the battery compartment, by pushing both the battery cover lock switches to open position then remove the battery cover. Please make sure that the upper battery contacts are properly aligned with the contacts of the terminal. Close the battery cover and push the cover lock switches to lock.

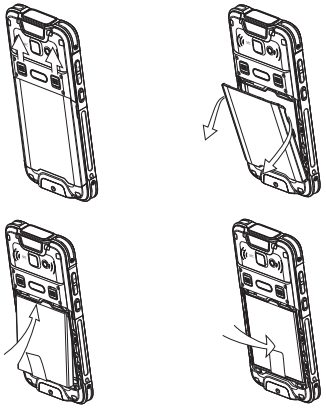

Charging Time

The required charging time depends on the actual application of the H-35 and the condition of the battery. The H-35 is shipped with a Lithium-ion battery that is not fully charged. Please fully charge it before the first time use.

Charging via USB Cable

Use the provided USB-C charge & communication cable together with a quick charge compliant power adapter (QC 3.0 power adapter not included) to charge the H-35 from a power outlet.

Charging via Charging Cradle

Connect the cradle with its power adapter to a power outlet. Insert the H-35 on the cradle for charging.

Barcode Data Capture

To scan a barcode label:

1. Point the scan window at the barcode.
2. Tap “Scan” on the screen or press one of the scan buttons on the H-35. The imager will project a red cross aiming laser which you can use to position the barcode or object within the field of view of the imager.
3. Ensure the entire barcode is within the area formed by the red cross aiming laser, then either wait for the timeout or release the scan key to capture the image. A white beam will illuminate the barcode to capture and decode it.

FCC Compliance for H-35 US

This Device complies with Part 15 of the FCC rules. Operation is subject to the following two conditions:
(1) This device may not cause harmful interference and,
(2) This device must accept any interference received, including interference that may cause undesired operation.

This device has been tested and found to comply with the limits for a Class B digital device, pursuant to Part 15 of the FCC Rules. These limits are designed to provide reasonable protection against harmful interference in a residential installation. This equipment generates, uses and can radiate radio frequency energy and, if not installed and used in accordance with the instructions, may cause harmful interference to radio communications. However, there is no guarantee that interference will not occur in a particular installation. If this equipment does cause harmful interference to radio or television reception, which can be determined by turning the equipment off and on, the user is encouraged to try to correct the interference by one or more of the following measures:

- Reorient or relocate the receiving antenna.
- Increase the separation between the equipment and receiver.
- Connect the equipment into an outlet on a circuit different from that to which the receiver is connected.
- Consult the dealer or an experienced radio/TV technician for help.

15.21 Statement
You are cautioned that changes or modifications not expressly approved by the part responsible for compliance could void the user’s authority to operate the equipment.
FCC RF Radiation Exposure Statement:

1. This Transmitter must not be co-located or operating in conjunction with any other antenna or transmitter.
2. This equipment complies with FCC RF radiation exposure limits set forth for an uncontrolled environment. This equipment should be installed and operated with a minimum distance of 1cm between the radiator and your body.

For further information please visit www.opticon.com

General Safety Rules

Please read this Guide thoroughly and carefully before you start using this device. Use only the components and accessories supplied by the manufacturer for H-35 you are using.
Do not attempt to disassemble H-35, as it does not contain parts that can be repaired by the user. Any tampering will void the warranty. When replacing the battery pack or at the end of life of H-35, disposal must be performed in compliance with the laws in force in your jurisdiction. Do not submerge H-35 in any liquid (water, detergent, etc).

For Safe Use Concern, Please Pay Special Attention on the Following Notices:
The manufacturer has taken safety as first priority during design stage. To avoid any potential accident, please be cautious on the following alert points:

- Please do not stock this device under conditions of high temperature which may cause the battery to become hot, catch fire, or become defective; leading to failure and safety concerns.
- When the charging time is noticeably longer than normally (CHARGING LED, RED, is still ON), please stop charging immediately. Please charge this device in a location without any water-spray or moisture.
- Ensure that the AC adapter can freely dissipate its heat; don't cover the AC adapter with objects, such as curtains.
- Never use a damaged AC adapter, immediately replace it with a new approved AC adapter.
- Please do not put any heavy weight on top of this device as it might cause the enclosure to crack and lead to injury.
- Please do not pull out the AC adapter with wet hands, which might cause electric shock.
- Please do not put the device into water which may cause short-circuit or fire.
- Please do not put this device in a location close to open fire.
- If the power or USB-C cable is seriously twisted or broken, please stop using it immediately or it may cause electric shock, short-circuit, or fire.
- Please stop using the device immediately when there is any unusual smell or overheat during charging or operation.
- Please stop using the device immediately when there is any liquid or dew on the device.
- Please do not use the AC adapter outdoors.
- While not used for charging, please remove the AC adapter plug from the wall AC outlet socket.

Important Notices When Using

- Before replacing battery pack due to failure, shortened life, or any other unusual behavior, please confirm if the device has been used correctly and there has no user operation issue involved.
- It is possible there will be some missed data or interference encountered during the wireless transmission. It is not a situation can be controlled by the manufacturer.
- Please do not use any alcohol, benzene, organic solvent, cleaner liquid, or steel-wool on the surface of this device.
- Please do not scratch the surface of the Scan Window in any way as this will cause problems with barcode scanning.

Audio Safety
To prevent possible hearing damage, do no listen at high volume for long periods.

European Union Regulatory Notes
Hereby, Opticon Sensors Europe BV declares that the radio equipment type H-35EU is in compliance with Directive 2014/53/EU.

The WiFi operating in the bands 5150 – 5350 MHz shall be restricted to indoor use for the following countries: AT, BE, BG, CH, CY, CZ, DE, DK, EE, EL, ES, FI, FR, HR, HU, IE, IS, IT, LI, LT, LU, LV, MT, NL, PL, PT, RO, SE, SI, SK, TR, UK(NI).

The full text of the Declaration of Conformity is available at the following internet address: https://opticon.com/product/h-35

Regulatory Notes US
The device for operation in the band 5150–5350 MHz is only for indoor use to reduce the potential for harmful interference to co-channel mobile satellite systems.

CE SAR
Head: 0.405 W/kg@10g, limit 2.0 W/kg
Body: 1.456 W/kg@10g, limit 2.0 W/kg
Limbs: 2.939 W/kg@10g, limit 4.0 W/kg

FCC SAR
Head: 1.098 W/kg@1g, limit 1.6 W/kg
Body: 0.793 W/kg@1g, limit 1.6 W/kg
Hotspot: 0.793 W/kg@1g, limit 1.6 W/kg
Extremity: 0.878 W/kg@10g, limit 1.6 W/kg

RF Exposure Information (SAR)
This device was tested for typical body-worn operations. A minimum separation distance must be maintained between the user's body and the handset, including the antenna: 0.5 cm to comply with the RF exposure requirements in Europe and 1.0 cm to comply with United States RF exposure requirements. Third-party belt-clips, holsters and similar accessories used by this device should not contain any metallic components. Body-worn accessories that do not meet these requirements may not comply with RF exposure requirements and should be avoided.

Battery Warning
Caution risk of explosion if battery is replaced by an incorrect type. Dispose of used batteries according to the instructions.

- Disposal of a battery into fire or a hot oven, or mechanically crushing or cutting of a battery, that can result in an explosion;
- Leaving a battery in an extremely high temperature surrounding environment that can result in an explosion or the leakage of flammable liquid or gas;
- A battery subjected to extremely low air pressure that may result in an explosion or the leakage of flammable liquid or gas.

Power and Frequency Ranges

H-35EU

Radio Type	Bands	Operation Frequency	Maximum Output
GSM	900	880-915 MHz	33 dBm
	1800	1710-1785 MHz	30 dBm
WCDMA	1	1920-1980 MHz	23.5 dBm
	8	880-915 MHz	23 dBm
LTE	1	1920-1980 MHz	23.5 dBm
	3	1710-1785 MHz	24 dBm
	7	2500-2570 MHz	23.5 dBm
	8	880-915 MHz	23.5 dBm
	20	832-862 MHz	24 dBm
	28	703-748 MHz	24.5 dBm
	38	2570-2620 MHz	23 dBm
	40	2300-2400 MHz	23.5 dBm
Bluetooth BR + EDR	2.4 GHz	2402-2480 MHz	EIRP 12.63 dBm
Bluetooth BLE	2.4 GHz	2402-2480 MHz	EIRP 8.01 dBm
Wi-Fi	2.4 GHz	2412-2472 MHz	EIRP 17.26 dBm
	5 GHz	5180-5240 MHz	EIRP 17.57 dBm
		5260-5320 MHz	EIRP 17.86 dBm
		5500-5700 MHz	EIRP 17.54 dBm
		5745-5825 MHz	EIRP 13.74 dBm
GNSS		1559-1610 MHz	N/A
NFC		13.56 MHz	-17.24dBμA/m at 10m

H-35US

Radio Type	Bands	Operation Frequency	Maximum Output
GSM	850	824-849 MHz	33 dBm
	1900	1850-1910 MHz	29.5 dBm
WCDMA	2	1850-1910 MHz	23.5 dBm
	4	1710-1755 MHz	23.5 dBm
	5	824-849 MHz	24 dBm
LTE	2	1850-1910 MHz	23 dBm
	4	1710-1755 MHz	23 dBm
	5	824-849 MHz	23 dBm
	7	2500-2570 MHz	22.5 dBm
	12	699-716 MHz	23 dBm
	13	777-787 MHz	23 dBm
	17	704-716 MHz	23 dBm
	38	2570-2620 MHz	22.5 dBm
	40A	2305-2315 MHz	23.5 dBm
	40B	2350-2360 MHz	23.5 dBm
	41	2496-2690 MHz	23 dBm
Bluetooth BR + EDR	2.4 GHz	2402-2480 MHz	P_{AV} 10.79 dBm
Bluetooth BLE	2.4 GHz	2402-2480 MHz	P_{AV} 6.06 dBm
Wi-Fi	2.4 GHz	2412-2472 MHz	P_{AV} 17.01 dBm
	5 GHz	5180-5240 MHz	P_{AV} 15.16 dBm
		5260-5320 MHz	P_{AV} 15.75 dBm
		5500-5700 MHz	P_{AV} 15.41 dBm
		5745-5825 MHz	P_{AV} 15.47 dBm
GNSS		1559-1610 MHz	N/A
NFC		13.56 MHz	-17.24dBμA/m at 10m

Documentation

Documentation, leaflet, drivers and software updates for the H-35 are available at: www.opticon.com

Opticon Sensors Europe BV
Opaallaan 35, 2132 XV Hoofddorp, the Netherlands.

© Copyright Opticon. All rights reserved.

This information is subject to change without prior notice. For availability, contact your local representative.

OPTICON

OPTICON

H-35
Mobile Computer

Quick Start Guide

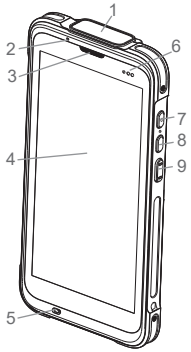

Front View

1. Scan window
2. Information LED
3. Speaker
4. Touch display
5. Microphone
6. Battery status LED
7. Power button
8. Function key
9. Trigger key

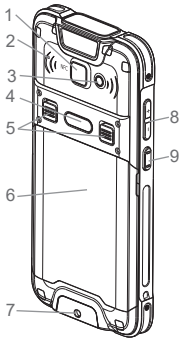

Back View

1. Autofocus camera
2. Microphone
3. Flash light LED
4. Pistol grip connection
5. Battery cover lock
6. Battery cover
7. Hand strap hook
8. Volume buttons
9. Trigger key

FOLDING INSTRUCTIONS

Confirm what is in the Box

- H-35
  A mobile computer with a barcode scanning feature.
- USB-C cable
  Charge/Communication cable.
- Rechargeable battery
- Hand strap
- Quick Start Guide
  Provides product information and instructions.

* The number of accessories may differ depending on the product configuration. If any of the accessories are damaged or missing, please contact your local representative.

General View

Bottom View

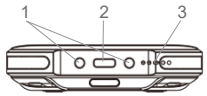

1. Charging pins
2. USB-C connector
3. Speaker

SD/SIM Card Installation

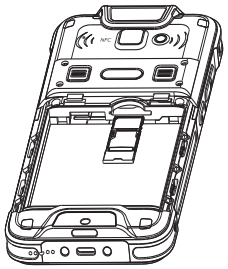

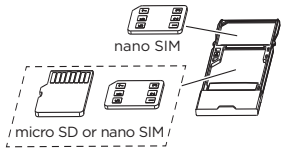

1. Turn off the H-35
2. Remove the battery cover
3. Remove the battery pack
4. Pull downwards the slot card, be careful not to touch the metal parts
5. Insert the micro SD or SIM card into the bottom slot
6. Insert the SIM card into the top slot
7. Re-insert the slot card
8. Insert the battery pack into the battery compartment
9. Close the battery cover and lock the battery cover lock switches

Charging Instructions

Battery Installation

The H-35 battery is initially not fully charged. After installing the battery, please charge it via the USB cable or the charging cradle. By default, the battery is not installed in the H-35 at the factory to avoid damage caused by excessive draining.

Annual replacement of the battery can avoid possible risks or abnormalities and ensure maximum performance. Do not store fully charged or (almost) empty batteries for long periods of time. We recommend charging spare batteries every two to three months to keep its charge at a moderate level to maximize battery life.

Open the battery compartment, by pushing both the battery cover lock switches to open position then remove the battery cover. Please make sure that the upper battery contacts are properly aligned with the contacts of the terminal. Close the battery cover and push the cover lock switches to lock.

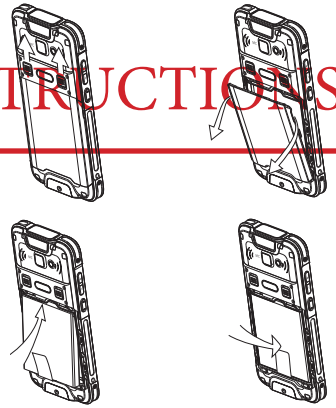

Charging Time

The required charging time depends on the actual application of the H-35 and the condition of the battery. The H-35 is shipped with a Lithium-ion battery that is not fully charged. Please fully charge it before the first time use.

Charging via USB Cable

Use the provided USB-C charge & communication cable together with a quick charge compliant power adapter (QC 3.0 power adapter not included) to charge the H-35 from a power outlet.

Charging via Charging Cradle

Connect the cradle with its power adapter to a power outlet. Insert the H-35 on the cradle for charging.

Barcode Data Capture

To scan a barcode label:

1. Point the scan window at the barcode.
2. Tap “Scan” on the screen or press one of the scan buttons on the H-35. The imager will project a red cross aiming laser which you can use to position the barcode or object within the field of view of the imager.
3. Ensure the entire barcode is within the area formed by the red cross aiming laser, then either wait for the timeout or release the scan key to capture the image. A white beam will illuminate the barcode to capture and decode it.

FCC Compliance for H-35 US

This Device complies with Part 15 of the FCC rules. Operation is subject to the following two conditions:
(1) This device may not cause harmful interference and,
(2) This device must accept any interference received, including interference that may cause undesired operation.

This device has been tested and found to comply with the limits for a Class B digital device, pursuant to Part 15 of the FCC Rules. These limits are designed to provide reasonable protection against harmful interference in a residential installation. This equipment generates, uses and can radiate radio frequency energy and, if not installed and used in accordance with the instructions, may cause harmful interference to radio communications. However, there is no guarantee that interference will not occur in a particular installation. If this equipment does cause harmful interference to radio or television reception, which can be determined by turning the equipment off and on, the user is encouraged to try to correct the interference by one or more of the following measures:

- Reorient or relocate the receiving antenna.
- Increase the separation between the equipment and receiver.
- Connect the equipment into an outlet on a circuit different from that to which the receiver is connected.
- Consult the dealer or an experienced radio/TV technician for help.

15.21 Statement
You are cautioned that changes or modifications not expressly approved by the part responsible for compliance could void the user’s authority to operate the equipment.
FCC RF Radiation Exposure Statement:

1. This Transmitter must not be co-located or operating in conjunction with any other antenna or transmitter.
2. This equipment complies with FCC RF radiation exposure limits set forth for an uncontrolled environment. This equipment should be installed and operated with a minimum distance of 1cm between the radiator and your body.

For further information please visit www.opticon.com

General Safety Rules

Please read this Guide thoroughly and carefully before you start using this device. Use only the components and accessories supplied by the manufacturer for H-35 you are using.
Do not attempt to disassemble H-35, as it does not contain parts that can be repaired by the user. Any tampering will void the warranty. When replacing the battery pack or at the end of life of H-35, disposal must be performed in compliance with the laws in force in your jurisdiction. Do not submerge H-35 in any liquid (water, detergent, etc).

For Safe Use Concern, Please Pay Special Attention on the Following Notices:
The manufacturer has taken safety as first priority during design stage. To avoid any potential accident, please be cautious on the following alert points:

- Please do not stock this device under conditions of high temperature which may cause the battery to become hot, catch fire, or become defective; leading to failure and safety concerns.
- When the charging time is noticeably longer than normally (CHARGING LED, RED, is still ON), please stop charging immediately. Please charge this device in a location without any water-spray or moisture.
- Ensure that the AC adapter can freely dissipate its heat; don't cover the AC adapter with objects, such as curtains.
- Never use a damaged AC adapter, immediately replace it with a new approved AC adapter.
- Please do not put any heavy weight on top of this device as it might cause the enclosure to crack and lead to injury.
- Please do not pull out the AC adapter with wet hands, which might cause electric shock.
- Please do not put the device into water which may cause short-circuit or fire.
- Please do not put this device in a location close to open fire.
- If the power or USB-C cable is seriously twisted or broken, please stop using it immediately or it may cause electric shock, short-circuit, or fire.
- Please stop using the device immediately when there is any unusual smell or overheat during charging or operation.
- Please stop using the device immediately when there is any liquid or dew on the device.
- Please do not use the AC adapter outdoors.
- While not used for charging, please remove the AC adapter plug from the wall AC outlet socket.

Important Notices When Using

- Before replacing battery pack due to failure, shortened life, or any other unusual behavior, please confirm if the device has been used correctly and there has no user operation issue involved.
- It is possible there will be some missed data or interference encountered during the wireless transmission. It is not a situation can be controlled by the manufacturer.
- Please do not use any alcohol, benzene, organic solvent, cleaner liquid, or steel-wool on the surface of this device.
- Please do not scratch the surface of the Scan Window in any way as this will cause problems with barcode scanning.

Audio Safety
To prevent possible hearing damage, do no listen at high volume for long periods.

European Union Regulatory Notes
Hereby, Opticon Sensors Europe BV declares that the radio equipment type H-35EU is in compliance with Directive 2014/53/EU.

The WiFi operating in the bands 5150 – 5350 MHz shall be restricted to indoor use for the following countries: AT, BE, BG, CH, CY, CZ, DE, DK, EE, EL, ES, FI, FR, HR, HU, IE, IS, IT, LI, LT, LU, LV, MT, NL, PL, PT, RO, SE, SI, SK, TR, UK(NI).

The full text of the Declaration of Conformity is available at the following internet address: https://opticon.com/product/h-35

Regulatory Notes US
The device for operation in the band 5150–5350 MHz is only for indoor use to reduce the potential for harmful interference to co-channel mobile satellite systems.

CE SAR
Head: 0.405 W/kg@10g, limit 2.0 W/kg
Body: 1.456 W/kg@10g, limit 2.0 W/kg
Limbs: 2.939 W/kg@10g, limit 4.0 W/kg

FCC SAR
Head: 1.098 W/kg@1g, limit 1.6 W/kg
Body: 0.793 W/kg@1g, limit 1.6 W/kg
Hotspot: 0.793 W/kg@1g, limit 1.6 W/kg
Extremity: 0.878 W/kg@10g, limit 1.6 W/kg

RF Exposure Information (SAR)
This device was tested for typical body-worn operations. A minimum separation distance must be maintained between the user's body and the handset, including the antenna: 0.5 cm to comply with the RF exposure requirements in Europe and 1.0 cm to comply with United States RF exposure requirements. Third-party belt-clips, holsters and similar accessories used by this device should not contain any metallic components. Body-worn accessories that do not meet these requirements may not comply with RF exposure requirements and should be avoided.

Battery Warning
Caution risk of explosion if battery is replaced by an incorrect type. Dispose of used batteries according to the instructions.

- Disposal of a battery into fire or a hot oven, or mechanically crushing or cutting of a battery, that can result in an explosion;
- Leaving a battery in an extremely high temperature surrounding environment that can result in an explosion or the leakage of flammable liquid or gas;
- A battery subjected to extremely low air pressure that may result in an explosion or the leakage of flammable liquid or gas.

Power and Frequency Ranges

H-35EU

Radio Type	Bands	Operation Frequency	Maximum Output
GSM	900	880-915 MHz	33 dBm
	1800	1710-1785 MHz	30 dBm
WCDMA	1	1920-1980 MHz	23.5 dBm
	8	880-915 MHz	23 dBm
LTE	1	1920-1980 MHz	23.5 dBm
	3	1710-1785 MHz	24 dBm
	7	2500-2570 MHz	23.5 dBm
	8	880-915 MHz	23.5 dBm
	20	832-862 MHz	24 dBm
	28	703-748 MHz	24.5 dBm
	38	2570-2620 MHz	23 dBm
	40	2300-2400 MHz	23.5 dBm
Bluetooth BR + EDR	2.4 GHz	2402-2480 MHz	EIRP 12.63 dBm
Bluetooth BLE	2.4 GHz	2402-2480 MHz	EIRP 8.01 dBm
Wi-Fi	2.4 GHz	2412-2472 MHz	EIRP 17.26 dBm
	5 GHz	5180-5240 MHz	EIRP 17.57 dBm
		5260-5320 MHz	EIRP 17.86 dBm
		5500-5700 MHz	EIRP 17.54 dBm
		5745-5825 MHz	EIRP 13.74 dBm
GNSS		1559-1610 MHz	N/A
NFC		13.56 MHz	-17.24dBμA/m at 10m

H-35US

Radio Type	Bands	Operation Frequency	Maximum Output
GSM	850	824-849 MHz	33 dBm
	1900	1850-1910 MHz	29.5 dBm
WCDMA	2	1850-1910 MHz	23.5 dBm
	4	1710-1755 MHz	23.5 dBm
	5	824-849 MHz	24 dBm
LTE	2	1850-1910 MHz	23 dBm
	4	1710-1755 MHz	23 dBm
	5	824-849 MHz	23 dBm
	7	2500-2570 MHz	22.5 dBm
	12	699-716 MHz	23 dBm
	13	777-787 MHz	23 dBm
	17	704-716 MHz	23 dBm
	38	2570-2620 MHz	22.5 dBm
	40A	2305-2315 MHz	23.5 dBm
	40B	2350-2360 MHz	23.5 dBm
	41	2496-2690 MHz	23 dBm
Bluetooth BR + EDR	2.4 GHz	2402-2480 MHz	P_{AV} 10.79 dBm
Bluetooth BLE	2.4 GHz	2402-2480 MHz	P_{AV} 6.06 dBm
Wi-Fi	2.4 GHz	2412-2472 MHz	P_{AV} 17.01 dBm
	5 GHz	5180-5240 MHz	P_{AV} 15.16 dBm
		5260-5320 MHz	P_{AV} 15.75 dBm
		5500-5700 MHz	P_{AV} 15.41 dBm
		5745-5825 MHz	P_{AV} 15.47 dBm
GNSS		1559-1610 MHz	N/A
NFC		13.56 MHz	-17.24dBμA/m at 10m

Documentation

Documentation, leaflet, drivers and software updates for the H-35 are available at: www.opticon.com

Opticon Sensors Europe BV
Opaallaan 35, 2132 XV Hoofddorp, the Netherlands.

© Copyright Opticon. All rights reserved.

This information is subject to change without prior notice. For availability, contact your local representative.

FOLLOWING INSTRUCTIONS

OPTICON