FCC SAR Test Report

APPLICANT	:	Opticon Sensors Europe B.V.
EQUIPMENT	:	Android Industrial Smartphone
BRAND NAME	:	Opticon
MODEL NAME	:	H-27
FCC ID	:	Q2QH-27
STANDARD	:	FCC 47 CFR Part 2 (2.1093) ANSI/IEEE C95.1-1992 IEEE 1528-2003

We, SPORTON INTERNATIONAL (XI'AN) INC., would like to declare that the tested sample has been evaluated in accordance with the procedures and had been in compliance with the applicable technical standards.

The test results in this report apply exclusively to the tested model / sample. Without written approval of SPORTON INTERNATIONAL (XI'AN) INC., the test report shall not be reproduced except in full.

Reviewed by: Eric Huang / Deputy Manager

Approved by: Jones Tsai / Manager

Testing Laboratory
2627

SPORTON INTERNATIONAL (XI'AN) INC.
1F, Building A3, No. 39 Chuangye Rd., Xi'an Hi-tech Zone, Shanxi Province, P. R. C.

Table of Contents

1. Statement of Compliance **4**
2. Administration Data **5**
3. Guidance Standard **5**
4. Equipment Under Test (EUT) **6**
4.1 General Information 6
4.2 Maximum Tune-up Limit 7
5. RF Exposure Limits **8**
5.1 Uncontrolled Environment 8
5.2 Controlled Environment 8
6. Specific Absorption Rate (SAR) **9**
6.1 Introduction 9
6.2 SAR Definition 9
7. System Description and Setup **10**
8. Measurement Procedures **11**
8.1 Spatial Peak SAR Evaluation 11
8.2 Power Reference Measurement 12
8.3 Area Scan 12
8.4 Zoom Scan 13
8.5 Volume Scan Procedures 13
8.6 Power Drift Monitoring 13
9. Test Equipment List **14**
10. System Verification **15**
10.1 Tissue Verification 15
10.2 System Performance Check Results 16
11. RF Exposure Positions **17**
11.1 Ear and handset reference point 17
11.2 Definition of the cheek position 18
11.3 Definition of the tilt position 19
11.4 Body Worn Accessory 20
11.5 Wireless Router 20
12. Conducted RF Output Power (Unit: dBm) **21**
13. Bluetooth Exclusions Applied **28**
14. Antenna Location **29**
15. SAR Test Results **30**
15.1 Head SAR 31
15.2 Hotspot SAR 33
15.3 Body Worn Accessory SAR 35
15.4 Repeated SAR Measurement 37
16. Simultaneous Transmission Analysis **38**
16.1 Head Exposure Conditions 39
16.2 Hotspot Exposure Conditions 42
16.3 Body-Worn Accessory Exposure Conditions 44
17. Uncertainty Assessment **45**
18. References **48**
Appendix A. Plots of System Performance Check
Appendix B. Plots of High SAR Measurement
Appendix C. DASY Calibration Certificate
Appendix D. Test Setup Photos

Revision History

REPORT NO.	VERSION	DESCRIPTION	ISSUED DATE
FA422837-02	Rev. 01	Initial issue of report	Jun. 20, 2014

1. Statement of Compliance

The maximum results of Specific Absorption Rate (SAR) found during testing for **Opticon Sensors Europe** B.V.**, Android Industrial Smartphone, H-27** are as follows.

Equipment Class	Frequency Band	Operating Mode	Highest SAR Summary			
			Head 1g SAR (W/kg)	Wireless Router 1g SAR (W/kg) (Gap 1cm)	Body-worn 1g SAR (W/kg) (Gap 1cm)	Simultaneous Transmission SAR (W/kg)
PCE	GSM850	Voice/Data	0.71	0.93	0.93	1.55
	GSM1900	Voice/Data	0.59	1.10	1.10	
	WCDMA Band V	Voice/Data	0.36	0.54	0.54	
	WCDMA Band IV	Voice/Data	0.62	1.19	1.19	
	WCDMA Band II	Voice/Data	0.57	1.06	1.06	
DTS	WLAN 2.4GHz Band	Data	<0.10	<0.10	<0.10	1.55
	WLAN 5.8GHz Band	Data	0.21	0.52	0.36	
NII	WLAN 5.2GHz Band	Data	0.26		0.20	1.50
	WLAN 5.3GHz Band	Data	0.19		0.16	
	WLAN 5.5GHz Band	Data	0.24		0.31	
DSS	Bluetooth	Data				1.23
Date of Testing:			Jun. 03, 2014 ~ Jun. 18, 2014			

This device is in compliance with Specific Absorption Rate (SAR) for general population/uncontrolled exposure limits (1.6 W/kg) specified in FCC 47 CFR part 2 (2.1093) and ANSI/IEEE C95.1-1992, and had been tested in accordance with the measurement methods and procedures specified in IEEE 1528-2003.

2. Administration Data

Testing Laboratory	
Test Site	SPORTON INTERNATIONAL (XI'AN) INC.
Test Site Location	1F, Building A3, No. 39 Chuangye Rd., Xi'an Hi-tech Zone, Shanxi Province, P. R. C. TEL: +86-029-8860-8767 FAX: +86-029-8860-8791

Applicant	
Company Name	Opticon Sensors Europe B.V.
Address	Opaallaan 35, 2132 XV Hoofddorp, The Netherlands

Manufacturer	
Company Name	Opticon Sensors Europe B.V.
Address	Opaallaan 35, 2132 XV Hoofddorp, The Netherlands

3. Guidance Standard

The Specific Absorption Rate (SAR) testing specification, method, and procedure for this device is in accordance with the following standards:

- FCC 47 CFR Part 2 (2.1093)
- ANSI/IEEE C95.1-1992
- IEEE 1528-2003
- FCC KDB 865664 D01 SAR Measurement 100 MHz to 6 GHz v01r03
- FCC KDB 865664 D02 SAR Reporting v01r01
- FCC KDB 447498 D01 General RF Exposure Guidance v05r02
- FCC KDB 648474 D04 SAR Evaluation Considerations for Wireless Handsets v01r02
- FCC KDB 248227 D01 SAR meas for 802 11abg v01r02
- FCC KDB 941225 D01 SAR test for 3G devices v02
- FCC KDB 941225 D02 HSPA and 1x Advanced v02r02
- FCC KDB 941225 D03 SAR Test Reduction GSM GPRS EDGE v01
- FCC KDB 941225 D06 Hotspot Mode SAR v01r01

4. Equipment Under Test (EUT)

4.1 General Information

Product Feature & Specification	
Equipment Name	Android Industrial Smartphone
Brand Name	Opticon
Model Name	H-27
FCC ID	Q2QH-27
IMEI Code	352132060000275
Wireless Technology and Frequency Range	GSM850: 824.2 MHz ~ 848.8 MHz GSM1900: 1850.2 MHz ~ 1909.8 MHz WCDMA Band V: 826.4 MHz ~ 846.6 MHz WCDMA Band IV: 1712.4 MHz ~ 1752.6 MHz WCDMA Band II: 1852.4 MHz ~ 1907.6 MHz WLAN 2.4GHz Band: 2412 MHz ~ 2462 MHz WLAN 5.2GHz Band: 5180 MHz ~ 5240 MHz WLAN 5.3GHz Band: 5260 MHz ~ 5320 MHz WLAN 5.5GHz Band: 5500 MHz ~ 5700 MHz WLAN 5.8GHz Band: 5745 MHz ~ 5805 MHz Bluetooth: 2402 MHz ~ 2480 MHz NFC : 13.56 MHz
Mode	• GSM/GPRS/EGPRS • RMC/AMR 12.2Kbps • HSDPA • HSUPA • 802.11a/b/g/n HT20/HT40 • Bluetooth v3.0+EDR, Bluetooth v4.0 LE • NFC
HW Version	V4.0
SW Version	R06C
GSM / (E)GPRS Transfer mode	Class B – EUT cannot support Packet Switched and Circuit Switched Network simultaneously but can automatically switch between Packet and Circuit Switched Network.
EUT Stage	Production Unit

Remark:

1. WLAN operation in 5600 MHz ~ 5650 MHz is notched.
2. This device 2.4GHz WLAN supports Hotspot operation, and 2.4GHz / 5.8GHz WLAN supports WiFi Direct (GC/GO), and 5.2GHz / 5.3GHz / 5.5GHz supports WiFi Direct (GC only).
3. This device supported VoIP in GPRS, EGPRS and WCDMA (e.g. 3rd party VoIP).
4. This device supports GRPS/EGPRS mode up to multi-slot class12 and does not support DTM operation.
5. There are two types of EUT that only different for scanner module but the others are the same, due the similarity between two types of EUT, we chose sample #1 to evaluate SAR for full test, and sample #2 only verified the worst cases of sample #1.

4.2 Maximum Tune-up Limit

Mode	Burst Average Power (dBm)	
	GSM850	GSM1900
GSM (GMSK, 1 Tx slot)	33.5	30.5
GPRS (GMSK, 1 Tx slot)	33.5	30.5
GPRS (GMSK, 2 Tx slots)	32.0	29.0
GPRS (GMSK, 3 Tx slots)	31.5	29.0
GPRS (GMSK, 4 Tx slots)	28.5	27.0
EDGE (8PSK, 1 Tx slot)	28.0	27.0
EDGE (8PSK, 2 Tx slots)	26.0	27.0
EDGE (8PSK, 3 Tx slots)	26.0	26.5
EDGE (8PSK, 4 Tx slots)	25.0	26.5

Mode	Average Power (dBm)		
	WCDMA Band V	WCDMA Band II	WCDMA Band IV
AMR 12.2Kbps	24.5	24.5	23.5
RMC 12.2Kbps	24.5	24.5	23.5
HSDPA Subtest-1	22.5	22.5	22.5
HSDPA Subtest-2	22.5	22.5	23.5
HSDPA Subtest-3	22.0	22.0	23.0
HSDPA Subtest-4	22.0	22.0	23.0
HSUPA Subtest-1	21.5	21.0	22.0
HSUPA Subtest-2	21.5	21.5	22.0
HSUPA Subtest-3	21.0	21.0	21.5
HSUPA Subtest-4	20.5	21.5	22.0
HSUPA Subtest-5	21.5	21.0	22.0

Mode			Maximum Average Power (dBm)
2.4GHz	802.11b		15.0
	802.11g		14.0
	802.11n HT20		13.5
	802.11n HT40		12.5
5GHz	802.11a	5.2GHz	14.5
		5.3GHz	14.5
		5.5GHz	14.0
		5.8GHz	15.5
	802.11n HT20	5.2GHz	12.5
		5.3GHz	12.0
		5.5GHz	12.5
		5.8GHz	13.5
	802.11n HT40	5.2GHz	12.5
		5.3GHz	13.0
		5.5GHz	12.5
		5.8GHz	13.0
Bluetooth v3.0+EDR			3.0
Bluetooth v4.0 LE			1.5

5. RF Exposure Limits

5.1 Uncontrolled Environment

Uncontrolled Environments are defined as locations where there is the exposure of individuals who have no knowledge or control of their exposure. The general population/uncontrolled exposure limits are applicable to situations in which the general public may be exposed or in which persons who are exposed as a consequence of their employment may not be made fully aware of the potential for exposure or cannot exercise control over their exposure. Members of the general public would come under this category when exposure is not employment-related; for example, in the case of a wireless transmitter that exposes persons in its vicinity.

5.2 Controlled Environment

Controlled Environments are defined as locations where there is exposure that may be incurred by persons who are aware of the potential for exposure, (i.e. as a result of employment or occupation). In general, occupational/controlled exposure limits are applicable to situations in which persons are exposed as a consequence of their employment, who have been made fully aware of the potential for exposure and can exercise control over their exposure. The exposure category is also applicable when the exposure is of a transient nature due to incidental passage through a location where the exposure levels may be higher than the general population/uncontrolled limits, but the exposed person is fully aware of the potential for exposure and can exercise control over his or her exposure by leaving the area or by some other appropriate means.

Limits for Occupational/Controlled Exposure (W/kg)

Whole-Body	Partial-Body	Hands, Wrists, Feet and Ankles
0.4	8.0	20.0

Limits for General Population/Uncontrolled Exposure (W/kg)

Whole-Body	Partial-Body	Hands, Wrists, Feet and Ankles
0.08	1.6	4.0

Whole-Body SAR is averaged over the entire body, partial-body SAR is averaged over any 1gram of tissue defined as a tissue volume in the shape of a cube. SAR for hands, wrists, feet and ankles is averaged over any 10 grams of tissue defined as a tissue volume in the shape of a cube.

6. Specific Absorption Rate (SAR)

6.1 Introduction

SAR is related to the rate at which energy is absorbed per unit mass in an object exposed to a radio field. The SAR distribution in a biological body is complicated and is usually carried out by experimental techniques or numerical modeling. The standard recommends limits for two tiers of groups, occupational/controlled and general population/uncontrolled, based on a person's awareness and ability to exercise control over his or her exposure. In general, occupational/controlled exposure limits are higher than the limits for general population/uncontrolled.

6.2 SAR Definition

The SAR definition is the time derivative (rate) of the incremental energy (dW) absorbed by (dissipated in) an incremental mass (dm) contained in a volume element (dv) of a given density (ρ). The equation description is as below:

$$\mathbf{SAR} = \frac{\mathbf{d}}{\mathbf{dt}}\left(\frac{\mathbf{dW}}{\mathbf{dm}}\right) = \frac{\mathbf{d}}{\mathbf{dt}}\left(\frac{\mathbf{dW}}{\boldsymbol{\rho}\mathbf{dv}}\right)$$

SAR is expressed in units of Watts per kilogram (W/kg)

$$\mathbf{SAR} = \frac{\boldsymbol{\sigma}|\mathbf{E}|^2}{\boldsymbol{\rho}}$$

Where: σ is the conductivity of the tissue, ρ is the mass density of the tissue and E is the RMS electrical field strength.

7. System Description and Setup

The DASY system used for performing compliance tests consists of the following items:

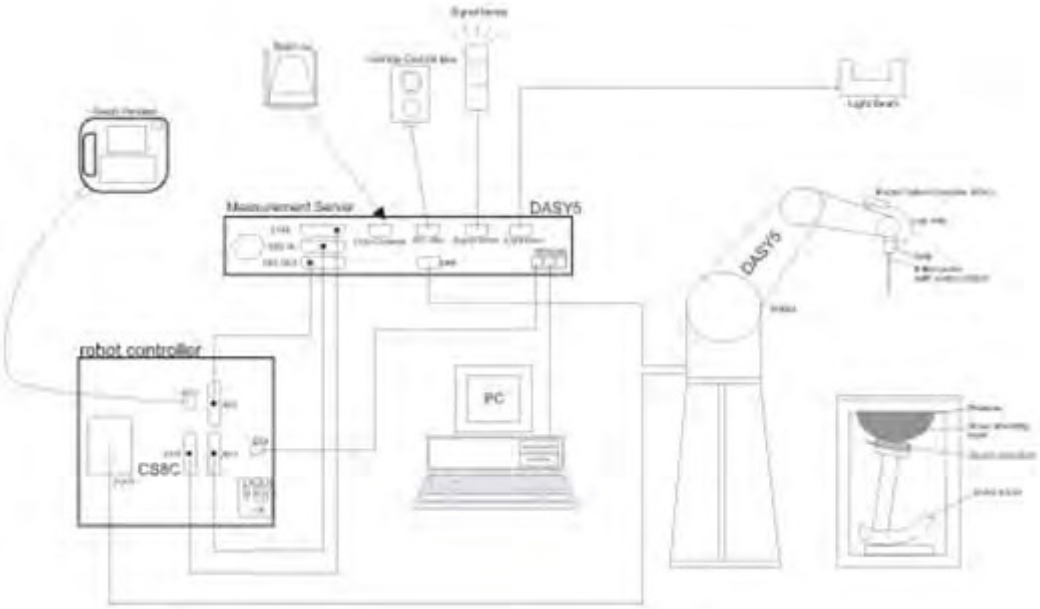

- A standard high precision 6-axis robot with controller, teach pendant and software. An arm extension for accommodating the data acquisition electronics (DAE).
- An isotropic Field probe optimized and calibrated for the targeted measurement.
- A data acquisition electronics (DAE) which performs the signal amplification, signal multiplexing, AD-conversion, offset measurements, mechanical surface detection, collision detection, etc. The unit is battery powered with standard or rechargeable batteries. The signal is optically transmitted to the EOC.
- The Electro-optical converter (EOC) performs the conversion from optical to electrical signals for the digital communication to the DAE. To use optical surface detection, a special version of the EOC is required. The EOC signal is transmitted to the measurement server.
- The function of the measurement server is to perform the time critical tasks such as signal filtering, control of the robot operation and fast movement interrupts.
- The Light Beam used is for probe alignment. This improves the (absolute) accuracy of the probe positioning.
- A computer running WinXP or Win7 and the DASY5 software.
- Remote control and teach pendant as well as additional circuitry for robot safety such as warning lamps, etc.
- The phantom, the device holder and other accessories according to the targeted measurement.

8. Measurement Procedures

The measurement procedures are as follows:

<Conducted power measurement>

(a) For WWAN power measurement, use base station simulator to configure EUT WWAN transmission in conducted connection with RF cable, at maximum power in each supported wireless interface and frequency band.
(b) Read the WWAN RF power level from the base station simulator.
(c) For WLAN/BT power measurement, use engineering software to configure EUT WLAN/BT continuously transmission, at maximum RF power in each supported wireless interface and frequency band
(d) Connect EUT RF port through RF cable to the power meter, and measure WLAN/BT output power

<SAR measurement>

(a) Use base station simulator to configure EUT WWAN transmission in radiated connection, and engineering software to configure EUT WLAN/BT continuously transmission, at maximum RF power, in the highest power channel.
(b) Place the EUT in the positions as Appendix D demonstrates.
(c) Set scan area, grid size and other setting on the DASY software.
(d) Measure SAR results for the highest power channel on each testing position.
(e) Find out the largest SAR result on these testing positions of each band
(f) Measure SAR results for other channels in worst SAR testing position if the reported SAR of highest power channel is larger than 0.8 W/kg

According to the test standard, the recommended procedure for assessing the peak spatial-average SAR value consists of the following steps:

(a) Power reference measurement
(b) Area scan
(c) Zoom scan
(d) Power drift measurement

8.1 Spatial Peak SAR Evaluation

The procedure for spatial peak SAR evaluation has been implemented according to the test standard. It can be conducted for 1g and 10g, as well as for user-specific masses. The DASY software includes all numerical procedures necessary to evaluate the spatial peak SAR value.

The base for the evaluation is a "cube" measurement. The measured volume must include the 1g and 10g cubes with the highest averaged SAR values. For that purpose, the center of the measured volume is aligned to the interpolated peak SAR value of a previously performed area scan.

The entire evaluation of the spatial peak values is performed within the post-processing engine (SEMCAD). The system always gives the maximum values for the 1g and 10g cubes. The algorithm to find the cube with highest averaged SAR is divided into the following stages:

(a) Extraction of the measured data (grid and values) from the Zoom Scan
(b) Calculation of the SAR value at every measurement point based on all stored data (A/D values and measurement parameters)
(c) Generation of a high-resolution mesh within the measured volume
(d) Interpolation of all measured values form the measurement grid to the high-resolution grid
(e) Extrapolation of the entire 3-D field distribution to the phantom surface over the distance from sensor to surface
(f) Calculation of the averaged SAR within masses of 1g and 10g

8.2 Power Reference Measurement

The Power Reference Measurement and Power Drift Measurements are for monitoring the power drift of the device under test in the batch process. The minimum distance of probe sensors to surface determines the closest measurement point to phantom surface. This distance cannot be smaller than the distance of sensor calibration points to probe tip as defined in the probe properties.

8.3 Area Scan

The area scan is used as a fast scan in two dimensions to find the area of high field values, before doing a fine measurement around the hot spot. The sophisticated interpolation routines implemented in DASY software can find the maximum found in the scanned area, within a range of the global maximum. The range (in dB0 is specified in the standards for compliance testing. For example, a 2 dB range is required in IEEE standard 1528 and IEC 62209 standards, whereby 3 dB is a requirement when compliance is assessed in accordance with the ARIB standard (Japan), if only one zoom scan follows the area scan, then only the absolute maximum will be taken as reference. For cases where multiple maximums are detected, the number of zoom scans has to be increased accordingly.

Area scan parameters extracted from FCC KDB 865664 D01v01r03 SAR measurement 100 MHz to 6 GHz.

	≤ 3 GHz	> 3 GHz
Maximum distance from closest measurement point (geometric center of probe sensors) to phantom surface	5 ± 1 mm	½·δ·ln(2) ± 0.5 mm
Maximum probe angle from probe axis to phantom surface normal at the measurement location	30° ± 1°	20° ± 1°
Maximum area scan spatial resolution: Δx_{Area}, Δy_{Area}	≤ 2 GHz: ≤ 15 mm 2 – 3 GHz: ≤ 12 mm	3 – 4 GHz: ≤ 12 mm 4 – 6 GHz: ≤ 10 mm
	When the x or y dimension of the test device, in the measurement plane orientation, is smaller than the above, the measurement resolution must be ≤ the corresponding x or y dimension of the test device with at least one measurement point on the test device.	

8.4 Zoom Scan

Zoom scans are used assess the peak spatial SAR values within a cubic averaging volume containing 1 gram and 10 gram of simulated tissue. The zoom scan measures points (refer to table below) within a cube shoes base faces are centered on the maxima found in a preceding area scan job within the same procedure. When the measurement is done, the zoom scan evaluates the averaged SAR for 1 gram and 10 gram and displays these values next to the job's label.

Zoom scan parameters extracted from FCC KDB 865664 D01v01r03 SAR measurement 100 MHz to 6 GHz.

			≤ 3 GHz	> 3 GHz
Maximum zoom scan spatial resolution: Δx_{Zoom}, Δy_{Zoom}			≤ 2 GHz: ≤ 8 mm 2 – 3 GHz: ≤ 5 mm*	3 – 4 GHz: ≤ 5 mm* 4 – 6 GHz: ≤ 4 mm*
Maximum zoom scan spatial resolution, normal to phantom surface	uniform grid: $\Delta z_{Zoom}(n)$		≤ 5 mm	3 – 4 GHz: ≤ 4 mm 4 – 5 GHz: ≤ 3 mm 5 – 6 GHz: ≤ 2 mm
	graded grid	$\Delta z_{Zoom}(1)$: between 1st two points closest to phantom surface	≤ 4 mm	3 – 4 GHz: ≤ 3 mm 4 – 5 GHz: ≤ 2.5 mm 5 – 6 GHz: ≤ 2 mm
		$\Delta z_{Zoom}(n>1)$: between subsequent points	$\leq 1.5 \cdot \Delta z_{Zoom}(n-1)$	
Minimum zoom scan volume	x, y, z		≥ 30 mm	3 – 4 GHz: ≥ 28 mm 4 – 5 GHz: ≥ 25 mm 5 – 6 GHz: ≥ 22 mm

Note: δ is the penetration depth of a plane-wave at normal incidence to the tissue medium; see draft standard IEEE P1528-2011 for details.

* When zoom scan is required and the *reported* SAR from the *area scan based 1-g SAR estimation* procedures of KDB 447498 is ≤ 1.4 W/kg, ≤ 8 mm, ≤ 7 mm and ≤ 5 mm zoom scan resolution may be applied, respectively, for 2 GHz to 3 GHz, 3 GHz to 4 GHz and 4 GHz to 6 GHz.

8.5 Volume Scan Procedures

The volume scan is used for assess overlapping SAR distributions for antennas transmitting in different frequency bands. It is equivalent to an oversized zoom scan used in standalone measurements. The measurement volume will be used to enclose all the simultaneous transmitting antennas. For antennas transmitting simultaneously in different frequency bands, the volume scan is measured separately in each frequency band. In order to sum correctly to compute the 1g aggregate SAR, the EUT remain in the same test position for all measurements and all volume scan use the same spatial resolution and grid spacing. When all volume scan were completed, the software, SEMCAD postprocessor can combine and subsequently superpose these measurement data to calculating the multiband SAR.

8.6 Power Drift Monitoring

All SAR testing is under the EUT install full charged battery and transmit maximum output power. In DASY measurement software, the power reference measurement and power drift measurement procedures are used for monitoring the power drift of EUT during SAR test. Both these procedures measure the field at a specified reference position before and after the SAR testing. The software will calculate the field difference in dB. If the power drifts more than 5%, the SAR will be retested.

9. Test Equipment List

Manufacturer	Name of Equipment	Type/Model	Serial Number	Calibration	
				Last Cal.	Due Date
SPEAG	835MHz System Validation Kit	D835V2	4d151	Mar. 25, 2013	Mar. 23, 2015
SPEAG	1750MHz System Validation Kit	D1750V2	1090	Mar. 27, 2013	Mar. 25, 2015
SPEAG	1900MHz System Validation Kit	D1900V2	5d170	Mar. 27, 2013	Mar. 25, 2015
SPEAG	2450MHz System Validation Kit	D2450V2	736	Aug. 23, 2013	Aug. 22, 2014
SPEAG	5GHz System Validation Kit	D5GHzV2	1006	Sep. 23, 2013	Sep. 22, 2014
SPEAG	Data Acquisition Electronics	DAE4	1353	Jan. 30, 2014	Jan. 29, 2015
SPEAG	Data Acquisition Electronics	DAE4	1210	May 19, 2014	May 18, 2015
SPEAG	Data Acquisition Electronics	DAE4	1358	Apr. 30, 2014	Apr. 29, 2015
SPEAG	Dosimetric E-Field Probe	EX3DV4	3898	Mar. 10, 2014	Mar. 09, 2015
SPEAG	Dosimetric E-Field Probe	EX3DV4	3661	Mar. 10, 2014	Mar. 09, 2015
SPEAG	Dosimetric E-Field Probe	EX3DV4	3911	Apr. 22, 2014	Apr. 21, 2015
SPEAG	Dosimetric E-Field Probe	EX3DV4	3753	Mar. 26, 2014	Mar. 25, 2015
SPEAG	Dosimetric E-Field Probe	EX3DV4	3857	May 23, 2014	May 22, 2015
SPEAG	SAM Twin Phantom	QD 000 P40 CD	TP-1753	NCR	NCR
SPEAG	SAM Twin Phantom	QD 000 P40 CD	TP-1754	NCR	NCR
SPEAG	SAM Twin Phantom	QD 000 P40 CB	TP-1477	NCR	NCR
SPEAG	SAM Twin Phantom	QD 000 P40 CB	TP-1479	NCR	NCR
Agilent	Wireless Communication Test Set	E5515C	MY52102600	Dec. 30, 2013	Dec. 29, 2014
Agilent	ENA Series Network Analyzer	E5071C	MY46111157	Dec. 30, 2013	Dec. 29, 2014
Agilent	Dielectric Probe Kit	85070E	MY44300751	NCR	NCR
Anritsu	Power Meter	ML2495A	1005002	Feb. 27, 2014	Feb. 26, 2015
Anritsu	Power Sensor	MA2411B	917070	Feb. 27, 2014	Feb. 26, 2015
R&S	Spectrum Analyzer	FSP7	101045	Dec. 30, 2013	Dec. 29, 2014
Agilent	Dual Directional Coupler	778D	50422	Note 2	
Woken	Attenuator	WK0602-XX	N/A	Note 2	
PE	Attenuator	PE7005-10	N/A	Note 2	
PE	Attenuator	PE7005- 3	N/A	Note 2	
AR	Power Amplifier	5S1G4M2	0328767	Note 2	
Mini-Circuits	Power Amplifier	ZVE-3W	162601250	Note 2	
Mini-Circuits	Power Amplifier	ZHL-42W+	13440021344	Note 2	

General Note:

1. The calibration certificate of DASY can be referred to appendix C of this report.
2. Prior to system verification and validation, the path loss from the signal generator to the system check source and the power meter, which includes the amplifier, cable, attenuator and directional coupler, was measured by the network analyzer. The reading of the power meter was offset by the path loss difference between the path to the power meter and the path to the system check source to monitor the actual power level fed to the system check source.
3. Referring to KDB 865664 D01v01r03, the dipole calibration interval can be extended to 3 years with justification. The dipoles are also not physically damaged, or repaired during the interval.
4. The justification data of dipole D835V2, SN: 4d151, D1750V2, SN: 1090 and D1900V2, SN: 5d170 can be found in appendix C. The return loss is < -20dB, within 20% of prior calibration, the impedance is within 5 ohm of prior calibration.

10. System Verification

10.1 Tissue Verification

The following tissue formulations are provided for reference only as some of the parameters have not been thoroughly verified. The composition of ingredients may be modified accordingly to achieve the desired target tissue parameters required for routine SAR evaluation.

Frequency (MHz)	Water (%)	Sugar (%)	Cellulose (%)	Salt (%)	Preventol (%)	DGBE (%)	Conductivity (σ)	Permittivity (εr)
For Head								
835	40.3	57.9	0.2	1.4	0.2	0	0.90	41.5
1750	55.2	0	0	0.3	0	44.5	1.37	40.1
1800, 1900, 2000	55.2	0	0	0.3	0	44.5	1.40	40.0
2450	55.0	0	0	0	0	45.0	1.80	39.2
For Body								
835	50.8	48.2	0	0.9	0.1	0	0.97	55.2
1750	70.2	0	0	0.4	0	29.4	1.49	53.4
1800, 1900, 2000	70.2	0	0	0.4	0	29.4	1.52	53.3
2450	68.6	0	0	0	0	31.4	1.95	52.7

Simulating Liquid for 5GHz, Manufactured by SPEAG

Ingredients	(% by weight)
Water	64~78%
Mineral oil	11~18%
Emulsifiers	9~15%
Additives and Salt	2~3%

<Tissue Dielectric Parameter Check Results>

Frequency (MHz)	Tissue Type	Liquid Temp. (℃)	Conductivity (σ)	Permittivity (ε_r)	Conductivity Target (σ)	Permittivity Target (ε_r)	Delta (σ) (%)	Delta (ε_r) (%)	Limit (%)	Date
835	Head	22.7	0.902	40.749	0.90	41.50	0.22	-1.81	±5	Jun. 04, 2014
1750	Head	22.5	1.378	41.340	1.37	40.10	0.58	3.09	±5	Jun. 11, 2014
1900	Head	22.5	1.412	39.311	1.40	40.00	0.86	-1.72	±5	Jun. 04, 2014
2450	Head	22.6	1.819	39.217	1.80	39.20	1.06	0.04	±5	Jun. 03, 2014
5200	Head	22.9	4.803	35.472	4.66	36.00	3.07	-1.47	±5	Jun. 05, 2014
5300	Head	22.9	4.910	35.343	4.76	35.90	3.15	-1.55	±5	Jun. 05, 2014
5600	Head	22.7	5.218	34.737	5.07	35.50	2.92	-2.15	±5	Jun. 18, 2014
5800	Head	22.9	5.406	34.362	5.27	35.30	2.58	-2.66	±5	Jun. 05, 2014
835	Body	22.4	0.974	54.204	0.97	55.20	0.41	-1.80	±5	Jun. 03, 2014
1750	Body	22.5	1.522	54.439	1.49	53.40	2.15	1.95	±5	Jun. 11, 2014
1900	Body	22.6	1.530	55.281	1.52	53.30	0.66	3.72	±5	Jun. 03, 2014
2450	Body	22.7	1.936	51.329	1.95	52.70	-0.72	-2.60	±5	Jun. 08, 2014
5200	Body	22.6	5.162	48.492	5.30	49.00	-2.60	-1.04	±5	Jun. 13, 2014
5300	Body	22.6	5.301	48.290	5.42	48.90	-2.20	-1.25	±5	Jun. 13, 2014
5600	Body	22.5	5.716	47.645	5.77	48.50	-0.94	-1.76	±5	Jun. 14, 2014
5800	Body	22.6	5.976	47.158	6.00	48.20	-0.40	-2.16	±5	Jun. 13, 2014

10.2 System Performance Check Results

Comparing to the original SAR value provided by SPEAG, the verification data should be within its specification of 10 %. Below table shows the target SAR and measured SAR after normalized to 1W input power. The table below indicates the system performance check can meet the variation criterion and the plots can be referred to Appendix A of this report.

Date	Frequency (MHz)	Tissue Type	Input Power (mW)	Dipole S/N	Probe S/N	DAE S/N	Measured SAR (W/kg)	Targeted SAR (W/kg)	Normalized SAR (W/kg)	Deviation (%)
Jun. 04, 2014	835	Head	250	4d151	3898	1353	2.52	9.49	10.08	6.22
Jun. 11, 2014	1750	Head	250	1090	3898	1353	9.17	36.90	36.68	-0.60
Jun. 04, 2014	1900	Head	250	5d170	3898	1353	9.29	40.20	37.16	-7.56
Jun. 03, 2014	2450	Head	250	736	3911	1358	13.30	53.20	53.2	0.00
Jun. 05, 2014	5200	Head	100	1006	3753	1358	7.83	76.60	78.3	2.22
Jun. 05, 2014	5300	Head	100	1006	3753	1358	8.32	80.40	83.2	3.48
Jun. 18, 2014	5600	Head	100	1006	3857	1210	7.65	79.90	76.5	-4.26
Jun. 05, 2014	5800	Head	100	1006	3753	1358	7.73	76.30	77.3	1.31
Jun. 03, 2014	835	Body	250	4d151	3898	1353	2.23	9.43	8.92	-5.41
Jun. 11, 2014	1750	Body	250	1090	3898	1353	9.56	38.10	38.24	0.37
Jun. 03, 2014	1900	Body	250	5d170	3898	1353	10.20	41.20	40.8	-0.97
Jun. 08, 2014	2450	Body	250	736	3753	1358	12.30	51.30	49.2	-4.09
Jun. 13, 2014	5200	Body	100	1006	3753	1358	7.42	71.50	74.2	3.78
Jun. 13, 2014	5300	Body	100	1006	3753	1358	7.39	75.20	73.9	-1.73
Jun. 14, 2014	5600	Body	100	1006	3661	1538	7.76	77.80	77.6	-0.26
Jun. 13, 2014	5800	Body	100	1006	3753	1358	7.32	72.30	73.2	1.24

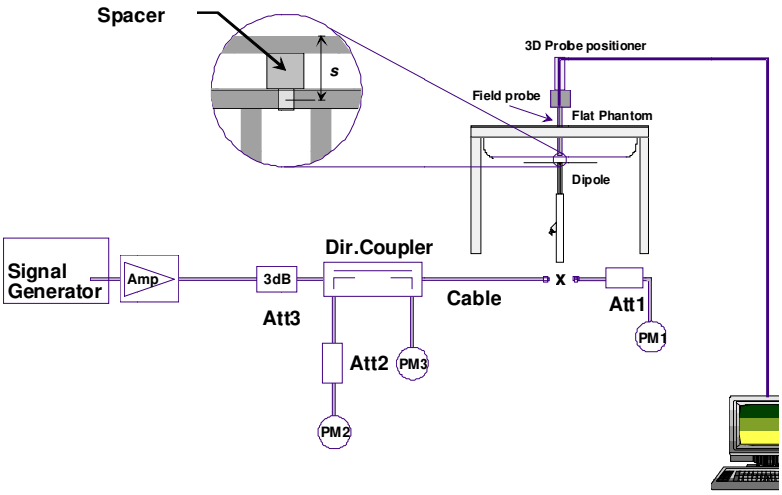

Fig 8.3.1 System Performance Check Setup

Fig 8.3.2 Setup Photo

11. RF Exposure Positions

11.1 Ear and handset reference point

Figure 9.1.1 shows the front, back, and side views of the SAM phantom. The center-of-mouth reference point is labeled "M," the left ear reference point (ERP) is marked "LE," and the right ERP is marked "RE." Each ERP is 15 mm along the B-M (back-mouth) line behind the entrance-to-ear-canal (EEC) point, as shown in Figure 9.1.2 The Reference Plane is defined as passing through the two ear reference points and point M. The line N-F (neck-front), also called the reference pivoting line, is normal to the Reference Plane and perpendicular to both a line passing through RE and LE and the B-M line (see Figure 9.1.3). Both N-F and B-M lines should be marked on the exterior of the phantom shell to facilitate handset positioning. Posterior to the N-F line the ear shape is a flat surface with 6 mm thickness at each ERP, and forward of the N-F line the ear is truncated, as illustrated in Figure 9.1.2. The ear truncation is introduced to preclude the ear lobe from interfering with handset tilt, which could lead to unstable positioning at the cheek.

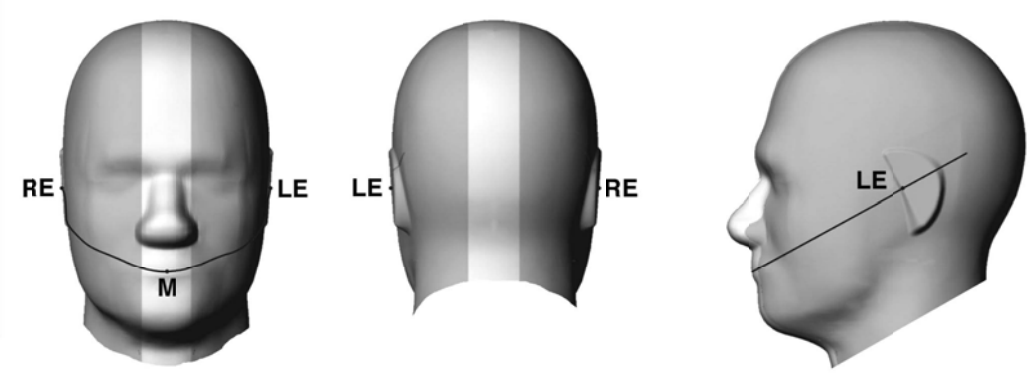

Fig 9.1.1 Front, back, and side views of SAM twin phantom

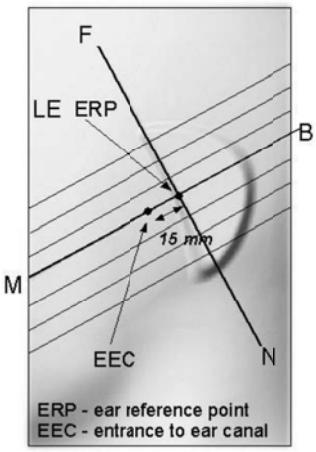

Fig 9.1.2 Close-up side view of phantom showing the ear region.

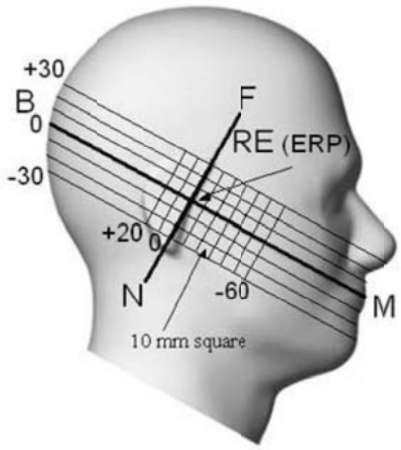

Fig 9.1.3 Side view of the phantom showing relevant markings and seven cross-sectional plane locations

11.2 Definition of the cheek position

1. Ready the handset for talk operation, if necessary. For example, for handsets with a cover piece (flip cover), open the cover. If the handset can transmit with the cover closed, both configurations must be tested.
2. Define two imaginary lines on the handset—the vertical centerline and the horizontal line. The vertical centerline passes through two points on the front side of the handset—the midpoint of the width wt of the handset at the level of the acoustic output (point A in Figure 9.2.1 and Figure 9.2.2), and the midpoint of the width wb of the bottom of the handset (point B). The horizontal line is perpendicular to the vertical centerline and passes through the center of the acoustic output (see Figure 9.2.1). The two lines intersect at point A. Note that for many handsets, point A coincides with the center of the acoustic output; however, the acoustic output may be located elsewhere on the horizontal line. Also note that the vertical centerline is not necessarily parallel to the front face of the handset (see Figure 9.2.2), especially for clamshell handsets, handsets with flip covers, and other irregularly-shaped handsets.
3. Position the handset close to the surface of the phantom such that point A is on the (virtual) extension of the line passing through points RE and LE on the phantom (see Figure 9.2.3), such that the plane defined by the vertical centerline and the horizontal line of the handset is approximately parallel to the sagittal plane of the phantom.
4. Translate the handset towards the phantom along the line passing through RE and LE until handset point A touches the pinna at the ERP.
5. While maintaining the handset in this plane, rotate it around the LE-RE line until the vertical centerline is in the plane normal to the plane containing B-M and N-F lines, i.e., the Reference Plane.
6. Rotate the handset around the vertical centerline until the handset (horizontal line) is parallel to the N-F line.
7. While maintaining the vertical centerline in the Reference Plane, keeping point A on the line passing through RE and LE, and maintaining the handset contact with the pinna, rotate the handset about the N-F line until any point on the handset is in contact with a phantom point below the pinna on the cheek. See Figure 9.2.3. The actual rotation angles should be documented in the test report.

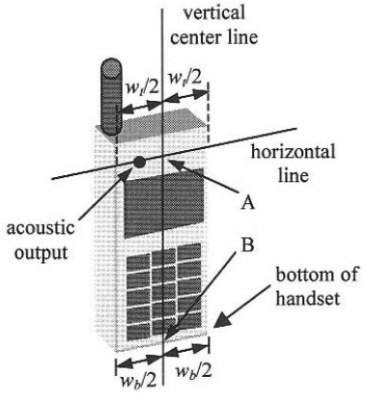

Fig 9.2.1 Handset vertical and horizontal reference lines—"fixed case

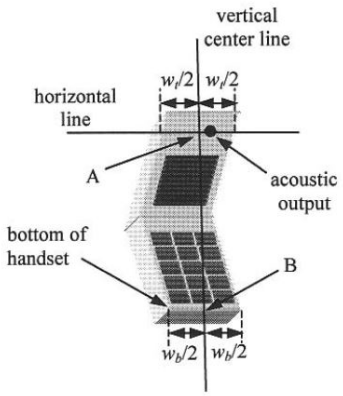

Fig 9.2.2 Handset vertical and horizontal reference lines—"clam-shell case"

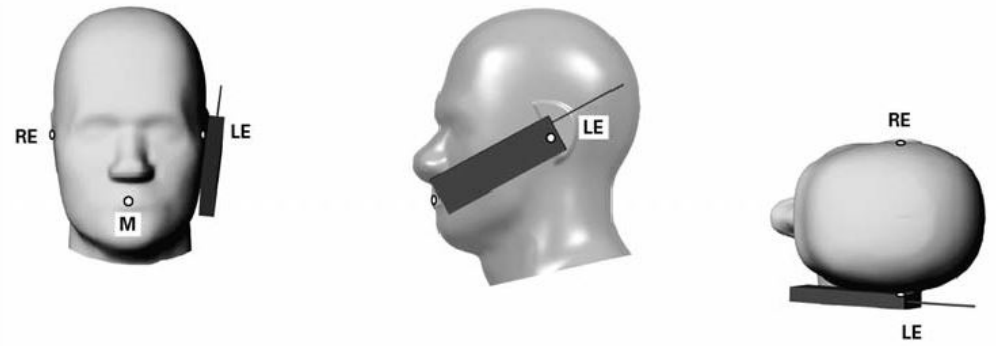

Fig 9.2.3 cheek or touch position. The reference points for the right ear (RE), left ear (LE), and mouth (M), which establish the Reference Plane for handset positioning, are indicated.

11.3 Definition of the tilt position

1. Ready the handset for talk operation, if necessary. For example, for handsets with a cover piece (flip cover), open the cover. If the handset can transmit with the cover closed, both configurations must be tested.
2. While maintaining the orientation of the handset, move the handset away from the pinna along the line passing through RE and LE far enough to allow a rotation of the handset away from the cheek by 15°.
3. Rotate the handset around the horizontal line by 15°.
4. While maintaining the orientation of the handset, move the handset towards the phantom on the line passing through RE and LE until any part of the handset touches the ear. The tilt position is obtained when the contact point is on the pinna. See Figure 9.3.1. If contact occurs at any location other than the pinna, e.g., the antenna at the back of the phantom head, the angle of the handset should be reduced. In this case, the tilt position is obtained if any point on the handset is in contact with the pinna and a second point

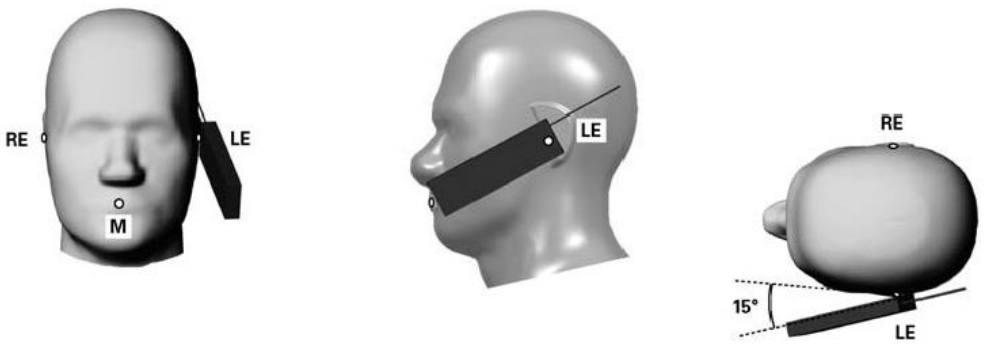

Fig 9.3.1 Tilt position. The reference points for the right ear (RE), left ear (LE), and mouth (M), which define the Reference Plane for handset positioning, are indicated.

11.4 Body Worn Accessory

Body-worn operating configurations are tested with the belt-clips and holsters attached to the device and positioned against a flat phantom in a normal use configuration (see Figure 9.4). Per KDB 648474 D04v01r02, body-worn accessory exposure is typically related to voice mode operations when handsets are carried in body-worn accessories. The body-worn accessory procedures in FCC KDB 447498 D01v05r02 should be used to test for body-worn accessory SAR compliance, without a headset connected to it. This enables the test results for such configuration to be compatible with that required for hotspot mode when the body-worn accessory test separation distance is greater than or equal to that required for hotspot mode, when applicable. When the reported SAR for body-worn accessory, measured without a headset connected to the handset is < 1.2 W/kg, the highest reported SAR configuration for that wireless mode and frequency band should be repeated for that body-worn accessory with a handset attached to the handset.

Accessories for body-worn operation configurations are divided into two categories: those that do not contain metallic components and those that do contain metallic components and those that do contain metallic components. When multiple accessories that do not contain metallic components are supplied with the device, the device is tested with only the accessory that dictates the closest spacing to the body. Then multiple accessories that contain metallic components are test with the device with each accessory. If multiple accessories share an identical metallic component (i.e. the same metallic belt-chip used with different holsters with no other metallic components) only the accessory that dictates the closest spacing to the body is tested.

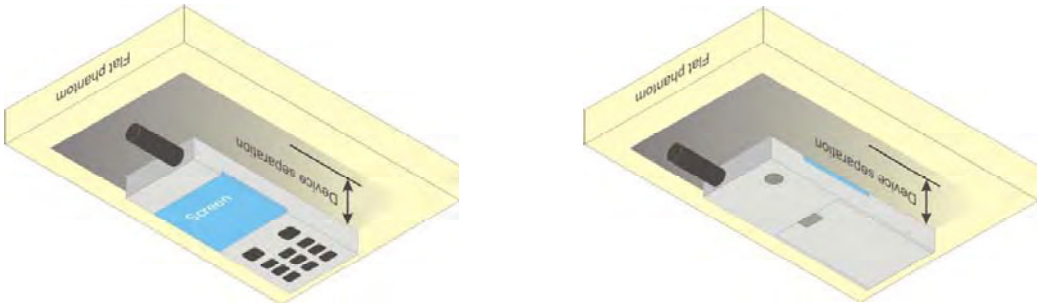

Fig 9.4 Body Worn Position

11.5 Wireless Router

Some battery-operated handsets have the capability to transmit and receive user through simultaneous transmission of WIFI simultaneously with a separate licensed transmitter. The FCC has provided guidance in FCC HDB Publication 941225 D06v01r01 where SAR test considerations for handsets (L x W ≥ 9 cm x 5 cm) are based on a composite test separation distance of 10mm from the front, back and edges of the device containing transmitting antennas within 2.5cm of their edges, determined form general mixed use conditions for this type of devices. Since the hotspot SAR results may overlap with the body-worn accessory SAR requirements, the more conservative configurations can be considered, thus excluding some body-worn accessory SAR tests.

When the user enables the personal wireless router functions for the handset, actual operations include simultaneous transmission of both the WIFI transmitter and another licensed transmitter. Both transmitters often do not transmit at the same transmitting frequency and thus cannot be evaluated for SAR under actual use conditions due to the limitations of the SAR assessment probes. Therefore, SAR must be evaluated for each frequency transmission and mode separately and spatially summed with the WIFI transmitter according to FCC KDB Publication 447498 D01v05r02 publication procedures. The “Portable Hotspot” feature on the handset was NOT activated during SAR assessments, to ensure the SAR measurements were evaluated for a single transmission frequency RF signal at a time.

12. Conducted RF Output Power (Unit: dBm)

<GSM Conducted Power>

General Note

1. Per KDB 447498 D01v05r02, the maximum output power channel is used for SAR testing and for further SAR test reduction.
2. According to October 2013TCB Workshop, for GSM / GPRS / EGPRS, the number of time slots to test for SAR should correspond to the highest source-based time-averaged maximum output power configuration, considering the possibility of e.g. 3rd party VoIP operation for head and body-worn SAR testing, the EUT was set in GPRS (3 Tx slots) for GSM850/GSM1900 band due to its highest frame-average power.
3. For hotspot mode SAR testing, GPRS / EDGE should be evaluated, therefore the EUT was set in GPRS 3 Tx slots for GSM850/GSM1900 band due to its highest frame-average power.

Band GSM850	Burst Average Power (dBm)			Tune-up Limit (dBm)	Frame-Average Power (dBm)			Tune-up Limit (dBm)
TX Channel	128	189	251		128	189	251	
Frequency (MHz)	824.2	836.4	848.8		824.2	836.4	848.8	
GSM (GMSK, 1 Tx slot)	32.91	**33.16**	32.14	33.5	23.91	24.16	23.14	24.5
GPRS (GMSK, 1 Tx slot) – CS1	32.82	33.04	33.05	33.5	23.82	24.04	24.05	24.5
GPRS (GMSK, 2 Tx slots) – CS1	31.89	31.97	31.93	32.0	25.89	25.97	25.93	26
GPRS (GMSK, 3 Tx slots) – CS1	30.24	30.36	30.35	31.5	25.98	**26.10**	26.09	27.24
GPRS (GMSK, 4 Tx slots) – CS1	28.15	28.36	28.26	28.5	25.15	25.36	25.26	25.5
EDGE (8PSK, 1 Tx slot) – MCS5	27.76	27.84	27.79	28.0	18.76	18.84	18.79	19
EDGE (8PSK, 2 Tx slots) – MCS5	25.90	25.96	25.94	26.0	19.90	19.96	19.94	20
EDGE (8PSK, 3 Tx slots) – MCS5	25.73	25.89	25.80	26.0	21.47	21.63	21.54	21.74
EDGE (8PSK, 4 Tx slots) – MCS5	24.52	24.59	24.57	25.0	21.52	21.59	21.57	22
Band GSM1900	Burst Average Power (dBm)			Tune-up Limit (dBm)	Frame-Average Power (dBm)			Tune-up Limit (dBm)
TX Channel	512	661	810		512	661	810	
Frequency (MHz)	1850.2	1880	1909.8		1850.2	1880	1909.8	
GSM (GMSK, 1 Tx slot)	**30.39**	30.04	29.99	30.5	21.39	21.04	20.99	21.5
GPRS (GMSK, 1 Tx slot) – CS1	30.38	29.93	29.90	30.5	21.38	20.93	20.90	21.5
GPRS (GMSK, 2 Tx slots) – CS1	28.95	28.57	28.53	29.0	22.95	22.57	22.53	23
GPRS (GMSK, 3 Tx slots) – CS1	28.87	28.43	28.41	29.0	**24.61**	24.17	24.15	24.74
GPRS (GMSK, 4 Tx slots) – CS1	26.59	26.25	26.12	27.0	23.59	23.25	23.12	24
EDGE (8PSK, 1 Tx slot) – MCS5	26.78	26.35	26.26	27.0	17.78	17.35	17.26	18
EDGE (8PSK, 2 Tx slots) – MCS5	26.62	26.21	26.15	27.0	20.62	20.21	20.15	21
EDGE (8PSK, 3 Tx slots) – MCS5	26.48	26.09	26.02	26.5	22.22	21.83	21.76	22.24
EDGE (8PSK, 4 Tx slots) – MCS5	26.36	25.91	25.81	26.5	23.36	22.91	22.81	23.5

Remark: The frame-averaged power is linearly scaled the maximum burst averaged power over 8 time slots.
The calculated method are shown as below:
Frame-averaged power = Maximum burst averaged power (1 Tx Slot) - 9 dB
Frame-averaged power = Maximum burst averaged power (2 Tx Slots) - 6 dB
Frame-averaged power = Maximum burst averaged power (3 Tx Slots) - 4.26 dB
Frame-averaged power = Maximum burst averaged power (4 Tx Slots) - 3 dB

<WCDMA Conducted Power>

1. The following tests were conducted according to the test requirements outlines in 3GPP TS 34.121 specification.
2. The procedures in KDB 941225 D01 are applied for 3GPP Rel. 6 HSPA to configure the device in the required sub-test mode(s) to determine SAR test exclusion.

A summary of these settings are illustrated below:

HSDPA Setup Configuration:

a. The EUT was connected to Base Station Agilent E5515C referred to the Setup Configuration.
b. The RF path losses were compensated into the measurements.
c. A call was established between EUT and Base Station with following setting:
   i. Set Gain Factors (β_c and β_d) and parameters were set according to each
   ii. Specific sub-test in the following table, C10.1.4, quoted from the TS 34.121
   iii. Set RMC 12.2Kbps + HSDPA mode.
   iv. Set Cell Power = -86 dBm
   v. Set HS-DSCH Configuration Type to FRC (H-set 1, QPSK)
   vi. Select HSDPA Uplink Parameters
   vii. Set Delta ACK, Delta NACK and Delta CQI = 8
   viii. Set Ack-Nack Repetition Factor to 3
   ix. Set CQI Feedback Cycle (k) to 4 ms
   x. Set CQI Repetition Factor to 2
   xi. Power Ctrl Mode = All Up bits
d. The transmitted maximum output power was recorded.

Table C.10.1.4: β values for transmitter characteristics tests with HS-DPCCH

Sub-test	β_c	β_d	β_d (SF)	β_c/β_d	β_{HS} (Note1, Note 2)	CM (dB) (Note 3)	MPR (dB) (Note 3)
1	2/15	15/15	64	2/15	4/15	0.0	0.0
2	12/15 (Note 4)	15/15 (Note 4)	64	12/15 (Note 4)	24/15	1.0	0.0
3	15/15	8/15	64	15/8	30/15	1.5	0.5
4	15/15	4/15	64	15/4	30/15	1.5	0.5

Note 1: Δ_{ACK}, Δ_{NACK} and Δ_{CQI} = 30/15 with β_{hs} = 30/15 * β_c.

Note 2: For the HS-DPCCH power mask requirement test in clause 5.2C, 5.7A, and the Error Vector Magnitude (EVM) with HS-DPCCH test in clause 5.13.1A, and HSDPA EVM with phase discontinuity in clause 5.13.1AA, Δ_{ACK} and Δ_{NACK} = 30/15 with β_{hs} = 30/15 * β_c, and Δ_{CQI} = 24/15 with β_{hs} = 24/15 * β_c.

Note 3: CM = 1 for β_c/β_d =12/15, β_{hs}/β_c=24/15. For all other combinations of DPDCH, DPCCH and HS-DPCCH the MPR is based on the relative CM difference. This is applicable for only UEs that support HSDPA in release 6 and later releases.

Note 4: For subtest 2 the β_c/β_d ratio of 12/15 for the TFC during the measurement period (TF1, TF0) is achieved by setting the signalled gain factors for the reference TFC (TF1, TF1) to β_c = 11/15 and β_d = 15/15.

Setup Configuration

HSUPA Setup Configuration:

a. The EUT was connected to Base Station Agilent E5515C referred to the Setup Configuration.
b. The RF path losses were compensated into the measurements.
c. A call was established between EUT and Base Station with following setting * :
   i. Call Configs = 5.2B, 5.9B, 5.10B, and 5.13.2B with QPSK
   ii. Set the Gain Factors (β_c and β_d) and parameters (AG Index) were set according to each specific sub-test in the following table, C11.1.3, quoted from the TS 34.121
   iii. Set Cell Power = -86 dBm
   iv. Set Channel Type = 12.2k + HSPA
   v. Set UE Target Power
   vi. Power Ctrl Mode= Alternating bits
   vii. Set and observe the E-TFCI
   viii. Confirm that E-TFCI is equal to the target E-TFCI of 75 for sub-test 1, and other subtest's E-TFCI
d. The transmitted maximum output power was recorded.

Table C.11.1.3: β values for transmitter characteristics tests with HS-DPCCH and E-DCH

Sub-test	β_c	β_d	β_d (SF)	β_c/β_d	β_{HS} (Note1)	β_{ec}	β_{ed} (Note 5) (Note 6)	β_{ed} (SF)	β_{ed} (Codes)	CM (dB) (Note 2)	MPR (dB) (Note 2)	AG Index (Note 6)	E-TFCI
1	11/15 (Note 3)	15/15 (Note 3)	64	11/15 (Note 3)	22/15	209/225	1309/225	4	1	1.0	0.0	20	75
2	6/15	15/15	64	6/15	12/15	12/15	94/75	4	1	3.0	2.0	12	67
3	15/15	9/15	64	15/9	30/15	30/15	β_{ed}1: 47/15 β_{ed}2: 47/15	4 4	2	2.0	1.0	15	92
4	2/15	15/15	64	2/15	4/15	2/15	56/75	4	1	3.0	2.0	17	71
5	15/15 (Note 4)	15/15 (Note 4)	64	15/15 (Note 4)	30/15	24/15	134/15	4	1	1.0	0.0	21	81

Note 1: Δ_{ACK}, Δ_{NACK} and Δ_{CQI} = 30/15 with β_{hs} = 30/15 * β_c .

Note 2: CM = 1 for β_c/β_d =12/15, β_{hs}/β_c=24/15. For all other combinations of DPDCH, DPCCH, HS- DPCCH, E-DPDCH and E-DPCCH the MPR is based on the relative CM difference.

Note 3: For subtest 1 the β_c/β_d ratio of 11/15 for the TFC during the measurement period (TF1, TF0) is achieved by setting the signalled gain factors for the reference TFC (TF1, TF1) to β_c = 10/15 and β_d = 15/15.

Note 4: For subtest 5 the β_c/β_d ratio of 15/15 for the TFC during the measurement period (TF1, TF0) is achieved by setting the signalled gain factors for the reference TFC (TF1, TF1) to β_c = 14/15 and β_d = 15/15.

Note 5: In case of testing by UE using E-DPDCH Physical Layer category 1, Sub-test 3 is omitted according to TS25.306 Table 5.1g.

Note 6: β_{ed} can not be set directly, it is set by Absolute Grant Value.

Setup Configuration

<WCDMA Conducted Power>

General Note:

1. SAR testing in AMR configuration is not required when the maximum average output of each RF channel for AMR 12.2Kbps is less than 0.25dB higher than that measured in RMC 12.2Kbps.
2. Per KDB 941225 D02v02r02, RMC 12.2kbps setting is used to evaluate SAR. If HSDPA/HSUPA output power is < 0.25dB higher than RMC, or reported SAR with RMC 12.2kbps setting is ≤ 1.2W/kg, HSDPA/HSUPA SAR evaluation can be excluded.

Band			WCDMA Band V				WCDMA Band II			
Tx Channel			4132	4182	4233	Tune-up Limit (dBm)	9262	9400	9538	Tune-up Limit (dBm)
Rx Channel			4357	4407	4458		9662	9800	9938	
Frequency (MHz)			826.4	836.4	846.6		1852.4	1880	1907.6	
MPR (dB)	3GPP Rel 99	AMR 12.2Kbps	23.39	23.32	23.38	24.5	23.15	23.09	23.22	24.5
	3GPP Rel 99	RMC 12.2Kbps	**23.41**	23.34	23.40	24.5	23.17	23.11	**23.25**	24.5
0	3GPP Rel 6	HSDPA Subtest-1	22.35	22.21	22.33	22.5	22.18	22.15	22.33	22.5
0	3GPP Rel 6	HSDPA Subtest-2	22.37	22.23	22.30	22.5	22.32	22.14	22.35	22.5
0.5	3GPP Rel 6	HSDPA Subtest-3	21.94	21.81	21.87	22.0	21.81	21.71	21.85	22.0
0.5	3GPP Rel 6	HSDPA Subtest-4	21.88	21.71	21.86	22.0	21.80	21.69	21.83	22.0
0	3GPP Rel 6	HSUPA Subtest-1	21.42	21.12	21.35	21.5	20.91	20.87	20.96	21.0
2	3GPP Rel 6	HSUPA Subtest-2	21.38	21.23	21.33	21.5	21.24	21.11	21.31	21.5
1	3GPP Rel 6	HSUPA Subtest-3	20.79	20.64	20.70	21.0	20.49	20.42	20.54	21.0
2	3GPP Rel 6	HSUPA Subtest-4	20.36	20.19	20.25	20.5	21.20	21.16	21.33	21.5
0	3GPP Rel 6	HSUPA Subtest-5	21.41	21.22	21.34	21.5	20.72	20.68	20.76	21.0

Band			WCDMA Band IV			
Tx Channel			1312	1413	1513	Tune-up Limit (dBm)
Rx Channel			1537	1638	1738	
Frequency (MHz)			1712.4	1732.6	1752.6	
MPR (dB)	3GPP Rel 99	AMR 12.2Kbps	22.88	22.46	23.17	23.5
	3GPP Rel 99	RMC 12.2Kbps	23.07	22.65	**23.25**	23.5
0	3GPP Rel 6	HSDPA Subtest-1	22.01	21.57	22.34	22.5
0	3GPP Rel 6	HSDPA Subtest-2	22.72	22.33	23.05	23.5
0.5	3GPP Rel 6	HSDPA Subtest-3	22.23	21.86	22.63	23.0
0.5	3GPP Rel 6	HSDPA Subtest-4	22.16	21.87	22.56	23.0
0	3GPP Rel 6	HSUPA Subtest-1	21.53	21.26	21.85	22.0
2	3GPP Rel 6	HSUPA Subtest-2	21.46	21.15	21.76	22.0
1	3GPP Rel 6	HSUPA Subtest-3	21.12	20.89	21.42	21.5
2	3GPP Rel 6	HSUPA Subtest-4	21.46	21.34	21.74	22.0
0	3GPP Rel 6	HSUPA Subtest-5	21.67	21.41	21.86	22.0

<WLAN Conducted Power>

General Note:

1. For 2.4GHz WLAN SAR testing, highest average RF output power channel for the lowest data rate for 802.11b were selected for SAR evaluation. 802.11g/n HT20/HT40 were not investigated since the average output powers over all channels and data rates were not more than 0.25 dB higher than the tested channel in the lowest data rate of 802.11b mode with highest duty cycle 97.63%.
2. For 5 GHz WLAN SAR testing, highest average RF output power channel for the lowest data rate for 802.11a were selected for SAR evaluation. 802.11n HT20/HT40 modes were not investigated since the average output powers over all channels and data rates were not more than 0.25 dB higher than the tested channel in the lowest data rate of 802.11a mode with highest duty cycle 87.26%.

<2.4GHz WLAN>

WLAN 2.4GHz 802.11b Average Power (dBm)							Tune up Limit (dBm)
Power vs. Channel			Power vs. Data Rate				
Channel	Frequency (MHz)	Data Rate 1Mbps	Channel	2Mbps	5.5Mbps	11Mbps	
CH 01	2412	14.09	CH 06	14.33	14.37	14.34	15.0
CH 06	2437	**14.39**					
CH 11	2462	13.04					

WLAN 2.4GHz 802.11g Average Power (dBm)											Tune up Limit (dBm)
Power vs. Channel			Power vs. Data Rate								
Channel	Frequency (MHz)	Data Rate 6Mbps	Channel	9Mbps	12Mbps	18Mbps	24Mbps	36Mbps	48Mbps	54Mbps	
CH 01	2412	13.66	CH 06	13.49	13.58	13.64	13.59	13.74	13.63	13.72	14.0
CH 06	2437	**13.91**									
CH 11	2462	12.48									

WLAN 2.4GHz 802.11n HT20 Average Power (dBm)											Tune up Limit (dBm)
Power vs. Channel			Power vs. MCS Index								
Channel	Frequency (MHz)	MCS Index MCS0	Channel	MCS1	MCS2	MCS3	MCS4	MCS5	MCS6	MCS7	
CH 01	2412	12.93	CH 06	13.13	13.09	13.15	13.09	13.11	13.15	13.11	13.5
CH 06	2437	**13.16**									
CH 11	2462	11.73									

WLAN 2.4GHz 802.11n HT40 Average Power (dBm)											Tune up Limit (dBm)
Power vs. Channel			Power vs. MCS Index								
Channel	Frequency (MHz)	MCS Index MCS0	Channel	MCS1	MCS2	MCS3	MCS4	MCS5	MCS6	MCS7	
CH 03	2422	**12.28**	CH 03	12.07	12.23	12.17	12.11	12.24	12.25	12.16	12.5
CH 06	2437	11.88									
CH 09	2452	11.27									

<5GHz WLAN>

WLAN 2.4GHz 802.11a Average Power (dBm)											Tune up Limit (dBm)
Power vs. Channel			Power vs. Data Rate								
Channel	Frequency (MHz)	Data Rate 6Mbps	Channel	9Mbps	12Mbps	18Mbps	24Mbps	36Mbps	48Mbps	54Mbps	
CH 36	5180	13.65	CH 48	14.13	14.13	14.13	14.17	14.19	14.16	14.11	14.5
CH 40	5200	13.76									
CH 44	5220	13.88									
CH 48	5240	**14.27**									
CH 52	5260	13.74	CH 64	13.78	13.92	13.94	13.80	14.06	14.03	14.02	14.5
CH 56	5280	13.76									
CH 60	5300	13.34									
CH 64	5320	**14.10**									
CH 100	5500	12.65	CH 116	13.36	13.39	13.42	13.50	13.53	13.49	13.53	14.0
CH 104	5520	12.79									
CH 108	5540	13.13									
CH 112	5560	13.16									
CH 116	5580	**13.54**									
CH 136	5680	13.00									
CH 140	5700	10.92									
CH 149	5745	15.08	CH 161	15.22	15.22	15.32	15.37	15.32	15.37	15.37	15.5
CH 153	5765	14.96									
CH 157	5785	15.08									
CH 161	5805	**15.38**									

WLAN 2.4GHz 802.11n HT20 Average Power (dBm)											Tune up Limit (dBm)
Power vs. Channel			Power vs. MCS Index								
Channel	Frequency (MHz)	MCS Index MCS0	Channel	MCS1	MCS2	MCS3	MCS4	MCS5	MCS6	MCS7	
CH 36	5180	11.47	CH 48	11.98	12.18	12.22	12.19	12.18	12.17	12.21	12.5
CH 40	5200	11.75									
CH 44	5220	11.86									
CH 48	5240	**12.23**									
CH 52	5260	11.35	CH 64	11.66	11.65	11.67	11.75	11.64	11.67	11.64	12.0
CH 56	5280	11.49									
CH 60	5300	10.95									
CH 64	5320	**11.76**									
CH 100	5500	11.24	CH 116	12.15	12.10	12.21	12.05	12.20	12.14	12.05	12.5
CH 104	5520	11.31									
CH 108	5540	11.72									
CH 112	5560	11.82									
CH 116	5580	**12.22**									
CH 136	5680	11.46									
CH 140	5700	9.13									
CH 149	5745	12.50	CH 161	12.78	12.79	12.88	13.09	13.03	13.05	12.93	13.5
CH 153	5765	12.39									
CH 157	5785	12.53									
CH 161	5805	**13.10**									

WLAN 2.4GHz 802.11n HT40 Average Power (dBm)											Tune up Limit (dBm)
Power vs. Channel			Power vs. MCS Index								
Channel	Frequency (MHz)	MCS Index MCS0	Channel	MCS1	MCS2	MCS3	MCS4	MCS5	MCS6	MCS7	
CH 38	5190	11.78	CH 46	12.18	12.25	12.19	12.19	12.20	12.02	12.25	12.5
CH 46	5230	**12.30**									
CH 54	5270	12.40	CH 62	12.53	12.51	12.49	12.48	12.19	12.49	12.50	13.0
CH 62	5310	**12.56**									
CH 102	5510	11.31	CH 134	11.86	11.80	11.83	11.73	11.89	11.84	11.89	12.5
CH 110	5550	11.82									
CH 134	5670	**11.91**									
CH 151	5755	12.07	CH 159	12.23	12.28	12.20	12.39	12.31	12.40	12.40	13.0
CH 159	5795	**12.41**									

13. Bluetooth Exclusions Applied

Mode Band	Average power(dBm)	
	Bluetooth v3.0+EDR	Bluetooth v4.0 LE
2.4GHz Bluetooth	3.0	1.5

Note:
Per KDB 447498 D01v05r02, the 1-g and 10-g SAR test exclusion thresholds for 100 MHz to 6 GHz at *test separation distances* ≤ 50 mm are determined by:

[(*max. power of channel, including tune-up tolerance, mW*)/(*min. test separation distance, mm*)] ·[√f(GHz)] ≤ 3.0 for 1-g SAR and ≤ 7.5 for 10-g extremity SAR

- f(GHz) is the RF channel transmit frequency in GHz
- Power and distance are rounded to the nearest mW and mm before calculation
- The result is rounded to one decimal place for comparison

Bluetooth Max Power (dBm)	Separation Distance (mm)	Frequency (GHz)	Exclusion Thresholds
3.0	2.00	2.48	0.63

Note:
Per KDB 447498 D01v05r02, when the minimum test separation distance is < 5 mm, a distance of 5 mm is applied to determine SAR test exclusion. The test exclusion threshold is 0.63 which is <= 3, SAR testing is not required.

14. Antenna Location

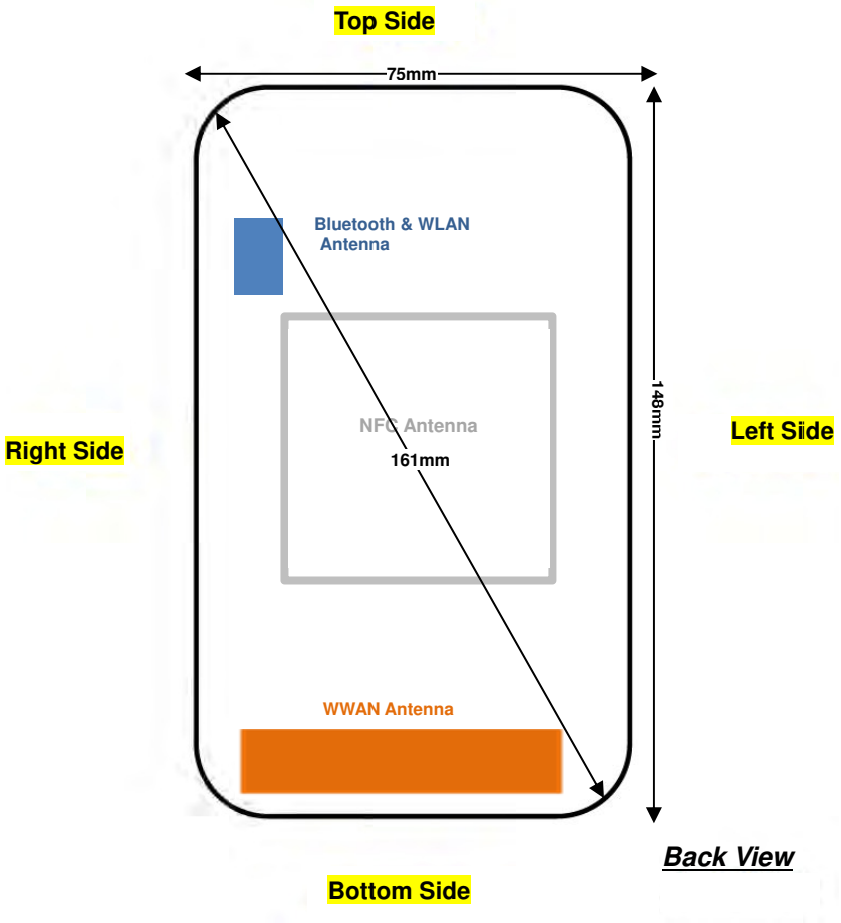

Distance of the Antenna to the EUT surface/edge						
Antennas	Back	Front	Top Side	Bottom Side	Right Side	Left Side
WWAN	≤ 25mm	≤ 25mm	127mm	≤ 25mm	≤ 25mm	≤ 25mm
Bluetooth & WLAN	≤ 25mm	≤ 25mm	43mm	99mm	≤ 25mm	65mm
Positions for SAR tests; Hotspot mode						
Antennas	Back	Front	Top Side	Bottom Side	Right Side	Left Side
WWAN	Yes	Yes	No	Yes	Yes	Yes
Bluetooth & WLAN	Yes	Yes	No	No	Yes	No

General Note:
Referring to KDB 941225 D06 v01r01, when the overall device length and width are ≥ 9cm*5cm, the test distance is 10 mm. SAR must be measured for all sides and surfaces with a transmitting antenna located within 25mm from that surface or edge.

15. SAR Test Results

General Note:

1. Per KDB 447498 D01v05r02, the reported SAR is the measured SAR value adjusted for maximum tune-up tolerance.
   a. Tune-up scaling Factor = tune-up limit power (mW) / EUT RF power (mW), where tune-up limit is the maximum rated power among all production units.
   b. For SAR testing of WLAN signal with non-100% duty cycle, the measured SAR is scaled-up by the duty cycle scaling factor which is equal to "1/(duty cycle)".
   c. For WWAN: Reported SAR (W/kg) = Measured SAR (W/kg)*Tune-up Scaling Factor.
   d. For WLAN: Reported SAR (W/kg) = Measured SAR (W/kg)* Duty Cycle scaling factor * Tune-up scaling factor.
2. Per KDB 447498 D01v05r02, for each exposure position, testing of other required channels within the operating mode of a frequency band is not required when the *reported* 1-g or 10-g SAR for the mid-band or highest output power channel is:
   - ≤ 0.8 W/kg or 2.0 W/kg, for 1-g or 10-g respectively, when the transmission band is ≤ 100 MHz
   - ≤ 0.6 W/kg or 1.5 W/kg, for 1-g or 10-g respectively, when the transmission band is between 100 MHz and 200 MHz
   - ≤ 0.4 W/kg or 1.0 W/kg, for 1-g or 10-g respectively, when the transmission band is ≥ 200 MHz
3. According to October 2013TCB Workshop, for GSM / GPRS / EGPRS, the number of time slots to test for SAR should correspond to the highest source-based time-averaged maximum output power configuration, considering the possibility of e.g. 3rd party VoIP operation for head and body-worn SAR testing, the EUT was set in GPRS (3 Tx slots) for GSM850/GSM1900 band due to its highest frame-average power.
4. For hotspot mode SAR testing, GPRS and EDGE should be evaluated, therefore the EUT was set in GPRS 3 Tx slots for GSM850/GSM1900 band due to its highest frame-average power.
5. This device 2.4GHz WLAN supports hotspot operation, and 2.4GHz / 5.8GHz WLAN supports WiFi Direct (Group Client / Group Owner), and 5.2GHz / 5.3GHz / 5.5GHz supports WiFi Direct (Group Client only).
6. Per KDB 941225 D02v02r02, RMC 12.2kbps setting is used to evaluate SAR. If HSDPA/HSUPA output power is < 0.25dB higher than RMC, or reported SAR with RMC 12.2kbps setting is ≤ 1.2W/kg, HSDPA/HSUPA SAR evaluation can be excluded.
7. Per KDB 648474 D04v01r02, when the reported SAR for a body-worn accessory measured without a headset connected to the handset is ≤ 1.2 W/kg, SAR testing with a headset connected to the handset is not required.

15.1 Head SAR

<GSM SAR>

Plot No.	Band	Mode	Test Position	Ch.	Freq. (MHz)	Sample	Average Power (dBm)	Tune-Up Limit (dBm)	Tune-up Scaling Factor	Power Drift (dB)	Measured 1g SAR (W/kg)	Reported 1g SAR (W/kg)
	GSM850	GPRS (3 Tx slots)	Right Cheek	189	836.4	#1	30.36	31.5	1.300	0.08	0.418	0.543
	GSM850	GPRS (3 Tx slots)	Right Tilted	189	836.4	#1	30.36	31.5	1.300	0.17	0.381	0.495
#01	GSM850	GPRS (3 Tx slots)	Left Cheek	189	836.4	#1	30.36	31.5	1.300	-0.01	0.543	**0.706**
	GSM850	GPRS (3 Tx slots)	Left Tilted	189	836.4	#1	30.36	31.5	1.300	-0.01	0.383	0.498
	GSM850	GPRS (3 Tx slots)	Left Cheek	189	836.4	#2	30.36	31.5	1.300	-0.01	0.442	0.575
#02	GSM1900	GPRS (3 Tx slots)	Right Cheek	512	1850.2	#1	28.87	29	1.030	-0.05	0.575	**0.592**
	GSM1900	GPRS (3 Tx slots)	Right Tilted	512	1850.2	#1	28.87	29	1.030	-0.12	0.197	0.203
	GSM1900	GPRS (3 Tx slots)	Left Cheek	512	1850.2	#1	28.87	29	1.030	0.03	0.434	0.447
	GSM1900	GPRS (3 Tx slots)	Left Tilted	512	1850.2	#1	28.87	29	1.030	0.08	0.185	0.191
	GSM1900	GPRS (3 Tx slots)	Right Cheek	512	1850.2	#2	28.87	29	1.030	0.04	0.557	0.574

<WCDMA SAR>

Plot No.	Band	Mode	Test Position	Ch.	Freq. (MHz)	Sample	Average Power (dBm)	Tune-Up Limit (dBm)	Tune-up Scaling Factor	Power Drift (dB)	Measured 1g SAR (W/kg)	Reported 1g SAR (W/kg)
	WCDMA Band V	RMC 12.2K	Right Cheek	4132	826.4	#1	23.41	24.5	1.285	0.06	0.231	0.297
	WCDMA Band V	RMC 12.2K	Right Tilted	4132	826.4	#1	23.41	24.5	1.285	0.14	0.206	0.265
	WCDMA Band V	RMC 12.2K	Left Cheek	4132	826.4	#1	23.41	24.5	1.285	-0.03	0.271	0.348
	WCDMA Band V	RMC 12.2K	Left Tilted	4132	826.4	#1	23.41	24.5	1.285	-0.02	0.202	0.260
#03	WCDMA Band V	RMC 12.2K	Left Cheek	4132	826.4	#2	23.41	24.5	1.285	0.04	0.280	**0.360**
	WCDMA Band IV	RMC 12.2K	Right Cheek	1513	1752.6	#1	23.25	23.5	1.059	-0.06	0.533	0.565
	WCDMA Band IV	RMC 12.2K	Right Tilted	1513	1752.6	#1	23.25	23.5	1.059	0.02	0.154	0.163
	WCDMA Band IV	RMC 12.2K	Left Cheek	1513	1752.6	#1	23.25	23.5	1.059	-0.02	0.408	0.432
	WCDMA Band IV	RMC 12.2K	Left Tilted	1513	1752.6	#1	23.25	23.5	1.059	0.15	0.143	0.151
#04	WCDMA Band IV	RMC 12.2K	Right Cheek	1513	1752.6	#2	23.25	23.5	1.059	0.02	0.582	**0.616**
#05	WCDMA Band II	RMC 12.2K	Right Cheek	9538	1907.6	#1	23.25	24.5	1.334	-0.03	0.424	**0.565**
	WCDMA Band II	RMC 12.2K	Right Tilted	9538	1907.6	#1	23.25	24.5	1.334	0.17	0.118	0.157
	WCDMA Band II	RMC 12.2K	Left Cheek	9538	1907.6	#1	23.25	24.5	1.334	0.05	0.379	0.505
	WCDMA Band II	RMC 12.2K	Left Tilted	9538	1907.6	#1	23.25	24.5	1.334	0.03	0.162	0.216
	WCDMA Band II	RMC 12.2K	Right Cheek	9538	1907.6	#2	23.25	24.5	1.334	-0.08	0.408	0.544

<DTS WLAN SAR>

Plot No.	Band	Mode	Test Position	Ch.	Freq. (MHz)	Sample	Average Power (dBm)	Tune-Up Limit (dBm)	Scaling Factor	Duty Cycle %	Duty Cycle Scaling Factor	Power Drift (dB)	Measured 1g SAR (W/kg)	Reported 1g SAR (W/kg)
	WLAN 2.4GHz	802.11b 1Mbps	Right Cheek	6	2437	#1	14.39	15	1.151	97.63	1.024	-0.01	0.026	0.031
	WLAN 2.4GHz	802.11b 1Mbps	Right Tilted	6	2437	#1	14.39	15	1.151	97.63	1.024	-0.05	0.013	0.015
#06	WLAN 2.4GHz	802.11b 1Mbps	Left Cheek	6	2437	#1	14.39	15	1.151	97.63	1.024	-0.12	0.035	**0.041**
	WLAN 2.4GHz	802.11b 1Mbps	Left Tilted	6	2437	#1	14.39	15	1.151	97.63	1.024	-0.05	0.018	0.021
	WLAN 2.4GHz	802.11b 1Mbps	Left Cheek	6	2437	#2	14.39	15	1.151	97.63	1.024	0.07	0.013	0.015
	WLAN 5.8GHz	802.11a 6Mbps	Right Cheek	161	5805	#1	15.38	15.5	1.028	87.26	1.146	0.05	0.134	0.158
	WLAN 5.8GHz	802.11a 6Mbps	Right Tilted	161	5805	#1	15.38	15.5	1.028	87.26	1.146	0.13	0.120	0.141
#07	WLAN 5.8GHz	802.11a 6Mbps	Left Cheek	161	5805	#1	15.38	15.5	1.028	87.26	1.146	0.14	0.178	**0.210**
	WLAN 5.8GHz	802.11a 6Mbps	Left Tilted	161	5805	#1	15.38	15.5	1.028	87.26	1.146	-0.06	0.084	0.099
	WLAN 5.8GHz	802.11a 6Mbps	Left Cheek	161	5805	#2	15.38	15.5	1.028	87.26	1.146	0.03	0.165	0.194

<UNII WLAN SAR>

Plot No.	Band	Mode	Test Position	Ch.	Freq. (MHz)	Sample	Average Power (dBm)	Tune-Up Limit (dBm)	Scaling Factor	Duty Cycle %	Duty Cycle Scaling Factor	Power Drift (dB)	Measured 1g SAR (W/kg)	Reported 1g SAR (W/kg)
	WLAN 5.2GHz	802.11a 6Mbps	Right Cheek	48	5240	#1	14.27	14.5	1.054	87.26	1.146	0.01	0.131	0.158
	WLAN 5.2GHz	802.11a 6Mbps	Right Tilted	48	5240	#1	14.27	14.5	1.054	87.26	1.146	0.02	0.074	0.089
#08	WLAN 5.2GHz	802.11a 6Mbps	Left Cheek	48	5240	#1	14.27	14.5	1.054	87.26	1.146	0.1	0.213	**0.257**
	WLAN 5.2GHz	802.11a 6Mbps	Left Tilted	48	5240	#1	14.27	14.5	1.054	87.26	1.146	0.05	0.114	0.138
	WLAN 5.2GHz	802.11a 6Mbps	Left Cheek	48	5240	#2	14.27	14.5	1.054	87.26	1.146	0.01	0.085	0.103
	WLAN 5.3GHz	802.11a 6Mbps	Right Cheek	64	5320	#1	14.10	14.5	1.096	87.26	1.146	0.08	0.081	0.102
	WLAN 5.3GHz	802.11a 6Mbps	Right Tilted	64	5320	#1	14.10	14.5	1.096	87.26	1.146	0.1	0.063	0.079
#09	WLAN 5.3GHz	802.11a 6Mbps	Left Cheek	64	5320	#1	14.10	14.5	1.096	87.26	1.146	0.02	0.149	**0.187**
	WLAN 5.3GHz	802.11a 6Mbps	Left Tilted	64	5320	#1	14.10	14.5	1.096	87.26	1.146	0.01	0.082	0.103
	WLAN 5.3GHz	802.11a 6Mbps	Left Cheek	64	5320	#2	14.10	14.5	1.096	87.26	1.146	0.09	0.136	0.171
	WLAN 5.5GHz	802.11a 6Mbps	Right Cheek	116	5580	#1	13.54	14.0	1.112	87.26	1.146	0.032	0.106	0.135
	WLAN 5.5GHz	802.11a 6Mbps	Right Tilted	116	5580	#1	13.54	14.0	1.112	87.26	1.146	-0.02	0.097	0.124
#10	WLAN 5.5GHz	802.11a 6Mbps	Left Cheek	116	5580	#1	13.54	14.0	1.112	87.26	1.146	0.05	0.185	**0.236**
	WLAN 5.5GHz	802.11a 6Mbps	Left Tilted	116	5580	#1	13.54	14.0	1.112	87.26	1.146	0.06	0.107	0.136
	WLAN 5.5GHz	802.11a 6Mbps	Left Cheek	116	5580	#2	13.54	14.0	1.112	87.26	1.146	0.09	0.114	0.145

15.2 Hotspot SAR

Distance of the Antenna to the EUT surface/edge						
Antennas	Back	Front	Top Side	Bottom Side	Right Side	Left Side
WWAN	≤ 25mm	≤ 25mm	127mm	≤ 25mm	≤ 25mm	≤ 25mm
Bluetooth & WLAN	≤ 25mm	≤ 25mm	43mm	99mm	≤ 25mm	65mm
Positions for SAR tests; Hotspot mode						
Antennas	Back	Front	Top Side	Bottom Side	Right Side	Left Side
WWAN	Yes	Yes	No	Yes	Yes	Yes
Bluetooth & WLAN	Yes	Yes	No	No	Yes	No

General Note:
Referring to KDB 941225 D06 v01r01, when the overall device length and width are ≥ 9cm*5cm, the test distance is 10 mm. SAR must be measured for all sides and surfaces with a transmitting antenna located within 25mm from that surface or edge.

<GSM SAR>

Plot No.	Band	Mode	Test Position	Gap (cm)	Ch.	Freq. (MHz)	Sample	Average Power (dBm)	Tune-Up Limit (dBm)	Tune-up Scaling Factor	Power Drift (dB)	Measured 1g SAR (W/kg)	Reported 1g SAR (W/kg)
	GSM850	GPRS (3 Tx slots)	Front	1	189	836.4	#1	30.36	31.5	1.300	0.03	0.437	0.568
	GSM850	GPRS (3 Tx slots)	Back	1	189	836.4	#1	30.36	31.5	1.300	-0.05	0.675	0.878
	GSM850	GPRS (3 Tx slots)	Left side	1	189	836.4	#1	30.36	31.5	1.300	0.01	0.424	0.551
	GSM850	GPRS (3 Tx slots)	Right side	1	189	836.4	#1	30.36	31.5	1.300	0.01	0.210	0.273
	GSM850	GPRS (3 Tx slots)	Bottom side	1	189	836.4	#1	30.36	31.5	1.300	0.07	0.197	0.256
	GSM850	GPRS (3 Tx slots)	Back	1	128	824.2	#1	30.24	31.5	1.337	-0.01	0.604	0.807
#11	GSM850	GPRS (3 Tx slots)	Back	1	251	848.8	#1	30.35	31.5	1.303	0.04	0.710	**0.925**
	GSM850	GPRS (3 Tx slots)	Back	1	251	848.8	#2	30.35	31.5	1.303	-0.05	0.643	0.838
	GSM850	GPRS (3 Tx slots)	Back	1	189	836.4	#2	30.36	31.5	1.300	-0.03	0.703	0.914
	GSM850	GPRS (3 Tx slots)	Back	1	128	824.2	#2	30.24	31.5	1.337	-0.01	0.655	0.875
	GSM1900	GPRS (3 Tx slots)	Front	1	512	1850.2	#1	28.87	29	1.030	0.03	0.709	0.731
	GSM1900	GPRS (3 Tx slots)	Back	1	512	1850.2	#1	28.87	29	1.030	0.08	0.998	1.028
	GSM1900	GPRS (3 Tx slots)	Left side	1	512	1850.2	#1	28.87	29	1.030	0.11	0.277	0.285
	GSM1900	GPRS (3 Tx slots)	Right side	1	512	1850.2	#1	28.87	29	1.030	0.1	0.488	0.503
	GSM1900	GPRS (3 Tx slots)	Bottom side	1	512	1850.2	#1	28.87	29	1.030	0.03	0.805	0.829
	GSM1900	GPRS (3 Tx slots)	Back	1	661	1880	#1	28.43	29	1.140	0.07	0.809	0.922
	GSM1900	GPRS (3 Tx slots)	Back	1	810	1909.8	#1	28.41	29	1.146	-0.07	0.655	0.750
	GSM1900	GPRS (3 Tx slots)	Bottom side	1	661	1880	#1	28.43	29	1.140	0.02	0.719	0.820
	GSM1900	GPRS (3 Tx slots)	Bottom side	1	810	1909.8	#1	28.41	29	1.146	0.04	0.592	0.678
#12	GSM1900	GPRS (3 Tx slots)	Back	1	512	1850.2	#2	28.87	29	1.030	0.05	1.070	**1.103**
	GSM1900	GPRS (3 Tx slots)	Back	1	661	1880	#2	28.43	29	1.140	0.04	0.939	1.071
	GSM1900	GPRS (3 Tx slots)	Back	1	810	1909.8	#2	28.41	29	1.146	0.03	0.738	0.845

<WCDMA SAR>

Plot No.	Band	Mode	Test Position	Gap (cm)	Ch.	Freq. (MHz)	Sample	Average Power (dBm)	Tune-Up Limit (dBm)	Tune-up Scaling Factor	Power Drift (dB)	Measured 1g SAR (W/kg)	Reported 1g SAR (W/kg)
	WCDMA Band V	RMC 12.2K	Front	1	4132	826.4	#1	23.41	24.5	1.285	0.03	0.243	0.312
#13	WCDMA Band V	RMC 12.2K	Back	1	4132	826.4	#1	23.41	24.5	1.285	0.06	0.420	**0.540**
	WCDMA Band V	RMC 12.2K	Left side	1	4132	826.4	#1	23.41	24.5	1.285	-0.02	0.228	0.293
	WCDMA Band V	RMC 12.2K	Right side	1	4132	826.4	#1	23.41	24.5	1.285	-0.03	0.118	0.152
	WCDMA Band V	RMC 12.2K	Bottom side	1	4132	826.4	#1	23.41	24.5	1.285	0.03	0.107	0.138
	WCDMA Band V	RMC 12.2K	Back	1	4132	826.4	#2	23.41	24.5	1.285	-0.01	0.374	0.481
	WCDMA Band IV	RMC 12.2K	Front	1	1513	1752.6	#1	23.25	23.5	1.059	-0.14	0.669	0.709
	WCDMA Band IV	RMC 12.2K	Back	1	1513	1752.6	#1	23.25	23.5	1.059	-0.02	1.060	1.123
	WCDMA Band IV	RMC 12.2K	Left side	1	1513	1752.6	#1	23.25	23.5	1.059	0.06	0.196	0.208
	WCDMA Band IV	RMC 12.2K	Right side	1	1513	1752.6	#1	23.25	23.5	1.059	0.09	0.492	0.521
	WCDMA Band IV	RMC 12.2K	Bottom side	1	1513	1752.6	#1	23.25	23.5	1.059	0.06	0.672	0.712
#14	WCDMA Band IV	RMC 12.2K	Back	1	1312	1712.4	#1	23.07	23.5	1.104	-0.09	1.080	**1.192**
	WCDMA Band IV	RMC 12.2K	Back	1	1413	1732.6	#1	22.65	23.5	1.216	0.06	0.947	1.152
	WCDMA Band IV	RMC 12.2K	Back	1	1312	1712.4	#2	23.07	23.5	1.104	0.09	1.070	1.181
	WCDMA Band IV	RMC 12.2K	Back	1	1413	1732.6	#2	22.65	23.5	1.216	0.01	0.970	1.180
	WCDMA Band IV	RMC 12.2K	Back	1	1513	1752.6	#2	23.25	23.5	1.059	0.04	1.120	1.186
	WCDMA Band II	RMC 12.2K	Front	1	9538	1907.6	#1	23.25	24.5	1.334	-0.11	0.534	0.712
	WCDMA Band II	RMC 12.2K	Back	1	9538	1907.6	#1	23.25	24.5	1.334	0.02	0.745	0.993
	WCDMA Band II	RMC 12.2K	Left side	1	9538	1907.6	#1	23.25	24.5	1.334	0.12	0.209	0.279
	WCDMA Band II	RMC 12.2K	Right side	1	9538	1907.6	#1	23.25	24.5	1.334	0.04	0.325	0.433
	WCDMA Band II	RMC 12.2K	Bottom side	1	9538	1907.6	#1	23.25	24.5	1.334	0.17	0.633	0.844
	WCDMA Band II	RMC 12.2K	Back	1	9262	1852.4	#1	23.17	24.5	1.358	0.02	0.629	0.854
	WCDMA Band II	RMC 12.2K	Back	1	9400	1880	#1	23.11	24.5	1.377	0.01	0.603	0.830
	WCDMA Band II	RMC 12.2K	Bottom side	1	9262	1852.4	#1	23.17	24.5	1.358	0.06	0.516	0.701
	WCDMA Band II	RMC 12.2K	Bottom side	1	9400	1880	#1	23.11	24.5	1.377	0.14	0.529	0.729
#15	WCDMA Band II	RMC 12.2K	Back	1	9538	1907.6	#2	23.25	24.5	1.334	0.03	0.791	**1.055**
	WCDMA Band II	RMC 12.2K	Back	1	9262	1852.4	#2	23.17	24.5	1.358	0.07	0.707	0.960
	WCDMA Band II	RMC 12.2K	Back	1	9400	1880	#2	23.11	24.5	1.377	0.04	0.728	1.003

<DTS WLAN SAR>

Plot No.	Band	Mode	Test Position	Gap (cm)	Ch.	Freq. (MHz)	Sample	Average Power (dBm)	Tune-Up Limit (dBm)	Scaling Factor	Duty Cycle %	Duty Cycle Scaling Factor	Power Drift (dB)	Measured 1g SAR (W/kg)	Reported 1g SAR (W/kg)
	WLAN 2.4GHz	802.11b 1Mbps	Front	1	6	2437	#1	14.39	15.0	1.151	97.63	1.024	-0.11	0.00279	0.003
#16	WLAN 2.4GHz	802.11b 1Mbps	Back	1	6	2437	#1	14.39	15.0	1.151	97.63	1.024	0.05	0.00383	**0.005**
	WLAN 2.4GHz	802.11b 1Mbps	Right Side	1	6	2437	#1	14.39	15.0	1.151	97.63	1.024	-0.12	0.00318	0.004
	WLAN 2.4GHz	802.11b 1Mbps	Back	1	6	2437	#2	14.39	15.0	1.151	97.63	1.024	-0.05	1.52e-005	<0.001
	WLAN 5.8GHz	802.11a 6Mbps	Front	1	161	5805	#1	15.38	15.5	1.028	87.26	1.146	0.01	0.042	0.049
	WLAN 5.8GHz	802.11a 6Mbps	Back	1	161	5805	#1	15.38	15.5	1.028	87.26	1.146	0.08	0.071	0.084
	WLAN 5.8GHz	802.11a 6Mbps	Right Side	1	161	5805	#1	15.38	15.5	1.028	87.26	1.146	0.08	0.170	0.200
	WLAN 5.8GHz	802.11a 6Mbps	Front	1	161	5805	#2	15.38	15.5	1.028	87.26	1.146	-0.07	0.061	0.072
	WLAN 5.8GHz	802.11a 6Mbps	Back	1	161	5805	#2	15.38	15.5	1.028	87.26	1.146	-0.08	0.306	0.361
#17	WLAN 5.8GHz	802.11a 6Mbps	Right Side	1	161	5805	#2	15.38	15.5	1.028	87.26	1.146	-0.02	0.440	**0.518**

15.3 Body Worn Accessory SAR

<GSM SAR>

Plot No.	Band	Mode	Test Position	Gap (cm)	Ch.	Freq. (MHz)	Sample	Average Power (dBm)	Tune-Up Limit (dBm)	Tune-up Scaling Factor	Power Drift (dB)	Measured 1g SAR (W/kg)	Reported 1g SAR (W/kg)
	GSM850	GPRS (3 Tx slots)	Front	1	189	836.4	#1	30.36	31.5	1.300	0.03	0.437	0.568
	GSM850	GPRS (3 Tx slots)	Back	1	189	836.4	#1	30.36	31.5	1.300	-0.05	0.675	0.878
	GSM850	GPRS (3 Tx slots)	Back	1	128	824.2	#1	30.24	31.5	1.337	-0.01	0.604	0.807
#11	GSM850	GPRS (3 Tx slots)	Back	1	251	848.8	#1	30.35	31.5	1.303	0.04	0.710	**0.925**
	GSM850	GPRS (3 Tx slots)	Back	1	251	848.8	#2	30.35	31.5	1.303	-0.05	0.643	0.838
	GSM850	GPRS (3 Tx slots)	Back	1	189	836.4	#2	30.36	31.5	1.300	-0.03	0.703	0.914
	GSM850	GPRS (3 Tx slots)	Back	1	128	824.2	#2	30.24	31.5	1.337	-0.01	0.655	0.875
	GSM1900	GPRS (3 Tx slots)	Front	1	512	1850.2	#1	28.87	29	1.030	0.03	0.709	0.731
	GSM1900	GPRS (3 Tx slots)	Back	1	512	1850.2	#1	28.87	29	1.030	0.08	0.998	1.028
	GSM1900	GPRS (3 Tx slots)	Back	1	661	1880	#1	28.43	29	1.140	0.07	0.809	0.922
	GSM1900	GPRS (3 Tx slots)	Back	1	810	1909.8	#1	28.41	29	1.146	-0.07	0.655	0.750
#12	GSM1900	GPRS (3 Tx slots)	Back	1	512	1850.2	#2	28.87	29	1.030	0.05	1.070	**1.103**
	GSM1900	GPRS (3 Tx slots)	Back	1	661	1880	#2	28.43	29	1.140	0.04	0.939	1.071
	GSM1900	GPRS (3 Tx slots)	Back	1	810	1909.8	#2	28.41	29	1.146	0.03	0.738	0.845

<WCDMA SAR>

Plot No.	Band	Mode	Test Position	Gap (cm)	Ch.	Freq. (MHz)	Sample	Average Power (dBm)	Tune-Up Limit (dBm)	Tune-up Scaling Factor	Power Drift (dB)	Measured 1g SAR (W/kg)	Reported 1g SAR (W/kg)
	WCDMA Band V	RMC 12.2K	Front	1	4132	826.4	#1	23.41	24.5	1.285	0.03	0.243	0.312
#13	WCDMA Band V	RMC 12.2K	Back	1	4132	826.4	#1	23.41	24.5	1.285	0.06	0.420	**0.540**
	WCDMA Band V	RMC 12.2K	Back	1	4132	826.4	#2	23.41	24.5	1.285	-0.01	0.374	0.481
	WCDMA Band IV	RMC 12.2K	Front	1	1513	1752.6	#1	23.25	23.5	1.059	-0.14	0.669	0.709
	WCDMA Band IV	RMC 12.2K	Back	1	1513	1752.6	#1	23.25	23.5	1.059	-0.02	1.060	1.123
#14	WCDMA Band IV	RMC 12.2K	Back	1	1312	1712.4	#1	23.07	23.5	1.104	-0.09	1.080	**1.192**
	WCDMA Band IV	RMC 12.2K	Back	1	1413	1732.6	#1	22.65	23.5	1.216	0.06	0.947	1.152
	WCDMA Band IV	RMC 12.2K	Back	1	1312	1712.4	#2	23.07	23.5	1.104	0.09	1.070	1.181
	WCDMA Band IV	RMC 12.2K	Back	1	1413	1732.6	#2	22.65	23.5	1.216	0.01	0.970	1.180
	WCDMA Band IV	RMC 12.2K	Back	1	1513	1752.6	#2	23.25	23.5	1.059	0.04	1.120	1.186
	WCDMA Band II	RMC 12.2K	Front	1	9538	1907.6	#1	23.25	24.5	1.334	-0.11	0.534	0.712
	WCDMA Band II	RMC 12.2K	Back	1	9538	1907.6	#1	23.25	24.5	1.334	0.02	0.745	0.993
	WCDMA Band II	RMC 12.2K	Back	1	9262	1852.4	#1	23.17	24.5	1.358	0.02	0.629	0.854
	WCDMA Band II	RMC 12.2K	Back	1	9400	1880	#1	23.11	24.5	1.377	0.01	0.603	0.830
#15	WCDMA Band II	RMC 12.2K	Back	1	9538	1907.6	#2	23.25	24.5	1.334	0.03	0.791	**1.055**
	WCDMA Band II	RMC 12.2K	Back	1	9262	1852.4	#2	23.17	24.5	1.358	0.07	0.707	0.960
	WCDMA Band II	RMC 12.2K	Back	1	9400	1880	#2	23.11	24.5	1.377	0.04	0.728	1.003

<DTS WLAN SAR>

Plot No.	Band	Mode	Test Position	Gap (cm)	Ch.	Freq. (MHz)	Sample	Average Power (dBm)	Tune-Up Limit (dBm)	Scaling Factor	Duty Cycle %	Duty Cycle Scaling Factor	Power Drift (dB)	Measured 1g SAR (W/kg)	Reported 1g SAR (W/kg)
	WLAN 2.4GHz	802.11b 1Mbps	Front	1	6	2437	#1	14.39	15.0	1.151	97.63	1.024	-0.11	0.00279	0.003
#16	WLAN 2.4GHz	802.11b 1Mbps	Back	1	6	2437	#1	14.39	15.0	1.151	97.63	1.024	0.05	0.00383	**0.005**
	WLAN 2.4GHz	802.11b 1Mbps	Back	1	6	2437	#2	14.39	15.0	1.151	97.63	1.024	-0.05	1.52e-005	<0.001
	WLAN 5.8GHz	802.11a 6Mbps	Front	1	161	5805	#1	15.38	15.5	1.028	87.26	1.146	0.01	0.042	0.049
	WLAN 5.8GHz	802.11a 6Mbps	Back	1	161	5805	#1	15.38	15.5	1.028	87.26	1.146	0.08	0.071	0.084
	WLAN 5.8GHz	802.11a 6Mbps	Front	1	161	5805	#2	15.38	15.5	1.028	87.26	1.146	-0.07	0.061	0.072
#18	WLAN 5.8GHz	802.11a 6Mbps	Back	1	161	5805	#2	15.38	15.5	1.028	87.26	1.146	-0.08	0.306	**0.361**

<NII WLAN SAR>

Plot No.	Band	Mode	Test Position	Gap (cm)	Ch.	Freq. (MHz)	Sample	Average Power (dBm)	Tune-Up Limit (dBm)	Scaling Factor	Duty Cycle %	Duty Cycle Scaling Factor	Power Drift (dB)	Measured 1g SAR (W/kg)	Reported 1g SAR (W/kg)
	WLAN 5.2GHz	802.11a 6Mbps	Front	1	48	5240	#1	14.27	14.5	1.054	87.26	1.146	0.07	0.042	0.051
#19	WLAN 5.2GHz	802.11a 6Mbps	Back	1	48	5240	#1	14.27	14.5	1.054	87.26	1.146	0.1	0.163	**0.197**
	WLAN 5.2GHz	802.11a 6Mbps	Back	1	48	5240	#2	14.27	14.5	1.054	87.26	1.146	0.02	0.147	0.178
	WLAN 5.3GHz	802.11a 6Mbps	Front	1	64	5320	#1	14.10	14.5	1.096	87.26	1.146	0.1	0.045	0.057
	WLAN 5.3GHz	802.11a 6Mbps	Back	1	64	5320	#1	14.10	14.5	1.096	87.26	1.146	0.05	0.124	0.156
#20	WLAN 5.3GHz	802.11a 6Mbps	Back	1	64	5320	#2	14.10	14.5	1.096	87.26	1.146	0.02	0.125	**0.157**
	WLAN 5.5GHz	802.11a 6Mbps	Front	1	116	5580	#1	13.54	14.0	1.112	87.26	1.146	0.1	0.070	0.089
	WLAN 5.5GHz	802.11a 6Mbps	Back	1	116	5580	#1	13.54	14.0	1.112	87.26	1.146	0.11	0.090	0.115
	WLAN 5.5GHz	802.11a 6Mbps	Front	1	116	5580	#2	13.54	14.0	1.112	87.26	1.146	0.06	0.075	0.096
#21	WLAN 5.5GHz	802.11a 6Mbps	Back	1	116	5580	#2	13.54	14.0	1.112	87.26	1.146	-0.02	0.244	**0.311**

15.4 Repeated SAR Measurement

No.	Band	Mode	Test Position	Gap (cm)	Ch.	Freq. (MHz)	Sample	Average Power (dBm)	Tune-Up Limit (dBm)	Tune-up Scaling Factor	Power Drift (dB)	Measured 1g SAR (W/kg)	Ratio	Reported 1g SAR (W/kg)
1st	GSM1900	GPRS (3 Tx slots)	Back	1	512	1850.2	#2	28.87	29	1.030	0.05	1.070	1	1.103
2nd	GSM1900	GPRS (3 Tx slots)	Back	1	512	1850.2	#2	28.87	29	1.030	0.05	1.060	1.009	1.092
1st	WCDMA Band IV	RMC 12.2K	Back	1	1513	1752.6	#2	23.25	23.5	1.059	0.04	1.120	1	1.186
2nd	WCDMA Band IV	RMC 12.2K	Back	1	1513	1752.6	#2	23.25	23.5	1.059	0.02	1.100	1.018	1.165

General Note:

1. Per KDB 865664 D01v01r03, for each frequency band, repeated SAR measurement is required only when the measured SAR is ≥0.8W/kg
2. Per KDB 865664 D01v01r03, if the ratio among the repeated measurement is ≤ 1.2 and the measured SAR <1.45W/kg, only one repeated measurement is required.
3. The ratio is the difference in percentage between original and repeated *measured SAR*.
4. All measurement SAR result is scaled-up to account for tune-up tolerance and is compliant.

16. Simultaneous Transmission Analysis

NO.	Simultaneous Transmission Configurations	Handheld POS Terminal			Note
		Head	Body-worn	Hotspot	
1.	GSM(voice) + WLAN 2.4GHz(data)	Yes	Yes		
2.	WCDMA(voice) + WLAN 2.4GHz(data)	Yes	Yes		
3.	GSM(voice) + WLAN 5.2/5.3/5.5/5.8GHz(data)	Yes	Yes		
4.	WCDMA(voice) + WLAN 5.2/5.3/5.5/5.8GHz(data)	Yes	Yes		
5.	GSM(voice) + Bluetooth(data)	Yes	Yes		
6.	WCDMA((voice) + Bluetooth(data)	Yes	Yes		
7.	GPRS/EDGE(data) + WLAN 2.4GHz(data)	Yes	Yes	Yes	2.4GHz Hotspot
8.	WCDMA(data) + WLAN 2.4GHz(data)	Yes	Yes	Yes	2.4GHz Hotspot
9.	GPRS/EDGE(data) + WLAN 5.2/5.3/5.5GHz(data)	Yes	Yes		WiFi Direct (GC)
10.	WCDMA(data) + WLAN 5.2/5.3/5.5GHz(data)	Yes	Yes		WiFi Direct (GC)
11.	GPRS/EDGE(data) + WLAN 5.8GHz(data)	Yes	Yes	Yes	WiFi Direct (GC/GO)
12.	WCDMA(data) + WLAN 5.8GHz(data)	Yes	Yes	Yes	WiFi Direct (GC/GO)
13.	GPRS/EDGE(data) + Bluetooth(data)	Yes	Yes	Yes	Bluetooth Tethering
14.	WCDMA(data) + Bluetooth(data)	Yes	Yes	Yes	Bluetooth Tethering

General Note:

1. This device supported VoIP in GPRS, EGPRS and WCDMA.
2. This device 2.4GHz WLAN supports hotspot operation, and 2.4GHz / 5.8GHz WLAN supports WiFi Direct (Group Client / Group Owner), and 5.2GHz / 5.3GHz / 5.5GHz supports WiFi Direct (Group Client only).
3. WLAN 2.4GHz and Bluetooth share the same antenna, and cannot transmit simultaneously.
4. EUT will choose either WLAN 2.4GHz or WLAN 5GHz according to the network signal condition; therefore, they will not transmit simultaneously at any moment.
5. EUT will choose either GSM or WCDMA according to the network signal condition; therefore, they will not transmit simultaneously at any moment.
6. The reported SAR summation is calculated based on the same configuration and test position.
7. Per KDB 447498 D01v05r02, simultaneous transmission SAR is compliant if,
   i) Scalar SAR summation < 1.6W/kg.
   ii) SPLSR = $(SAR_1 + SAR_2)^{1.5}$ / (*min. separation distance, mm*), and the peak separation distance is determined from the square root of $[(x_1-x_2)^2 + (y_1-y_2)^2 + (z_1-z_2)^2]$, where (x_1, y_1, z_1) and (x_2, y_2, z_2) are the coordinates of the extrapolated peak SAR locations in the zoom scan.
   iii) If SPLSR ≤ 0.04, simultaneously transmission SAR measurement is not necessary.
   iv) Simultaneously transmission SAR measurement, and the reported multi-band SAR < 1.6W/kg.
8. For simultaneous transmission analysis, Bluetooth SAR is estimated per KDB 447498 D01v05r02 based on the formula below.
   i) (*max. power of channel, including tune-up tolerance, mW*)/(*min. test separation distance, mm*)]·[$\sqrt{f(GHz)/x}$] W/kg for *test separation distances* ≤ 50 mm; where x = 7.5 for 1-g SAR, and x = 18.75 for 10-g SAR.
   ii) When the minimum separation distance is < 5mm, the distance is used 5mm to determine SAR test exclusion.
   iii) 0.4 W/kg for 1-g SAR and 1.0 W/kg for 10-g SAR, when the *test separation distances* is > 50 mm.
   iv) Bluetooth estimated SAR is conservatively determined by 5mm separation, for all applicable exposure positions.

Bluetooth Max Power	Exposure Position	Head	Hotspot	Body worn
	Test separation	0 mm	10 mm	10 mm
3 dBm	Estimated SAR (W/kg)	0.084 W/kg	0.042 W/kg	0.042 W/kg

16.1 Head Exposure Conditions

<WWAN PCE + WLAN DTS>

WWAN Band		Exposure Position	WWAN PCE Max. WWAN SAR (W/kg)	WLAN DTS Max. WLAN SAR (W/kg)	Summed SAR (W/kg)
GSM	GSM850	Right Cheek	0.543	0.158	0.70
		Right Tilted	0.495	0.141	0.64
		Left Cheek	0.706	0.210	0.92
		Left Tilted	0.498	0.099	0.60
	GSM1900	Right Cheek	0.592	0.158	0.75
		Right Tilted	0.203	0.141	0.34
		Left Cheek	0.447	0.210	0.66
		Left Tilted	0.191	0.099	0.29
WCMDA	Band V	Right Cheek	0.297	0.158	0.46
		Right Tilted	0.265	0.141	0.41
		Left Cheek	0.360	0.210	0.57
		Left Tilted	0.260	0.099	0.36
	Band IV	Right Cheek	0.616	0.158	0.77
		Right Tilted	0.163	0.141	0.30
		Left Cheek	0.432	0.210	0.64
		Left Tilted	0.151	0.099	0.25
	Band II	Right Cheek	0.565	0.158	0.72
		Right Tilted	0.157	0.141	0.30
		Left Cheek	0.505	0.210	0.72
		Left Tilted	0.216	0.099	0.32

<WWAN PCE + WLAN NII>

WWAN Band		Exposure Position	WWAN PCE Max. WWAN SAR (W/kg)	WLAN NII Max. WLAN SAR (W/kg)	Summed SAR (W/kg)
GSM	GSM850	Right Cheek	0.543	0.158	0.70
		Right Tilted	0.495	0.124	0.62
		Left Cheek	0.706	0.257	0.96
		Left Tilted	0.498	0.138	0.64
	GSM1900	Right Cheek	0.592	0.158	0.75
		Right Tilted	0.203	0.124	0.33
		Left Cheek	0.447	0.257	0.70
		Left Tilted	0.191	0.138	0.33
WCMDA	Band V	Right Cheek	0.297	0.158	0.46
		Right Tilted	0.265	0.124	0.39
		Left Cheek	0.360	0.257	0.62
		Left Tilted	0.260	0.138	0.40
	Band IV	Right Cheek	0.616	0.158	0.77
		Right Tilted	0.163	0.124	0.29
		Left Cheek	0.432	0.257	0.69
		Left Tilted	0.151	0.138	0.29
	Band II	Right Cheek	0.565	0.158	0.72
		Right Tilted	0.157	0.124	0.28
		Left Cheek	0.505	0.257	0.76
		Left Tilted	0.216	0.138	0.35

<WWAN PCE + Bluetooth DSS>

WWAN Band		Exposure Position	WWAN PCE Max. WWAN SAR (W/kg)	Bluetooth DSS Max. Bluetooth SAR (W/kg)	Summed SAR (W/kg)
GSM	GSM850	Right Cheek	0.543	0.084	0.63
		Right Tilted	0.495	0.084	0.58
		Left Cheek	0.706	0.084	0.79
		Left Tilted	0.498	0.084	0.58
	GSM1900	Right Cheek	0.592	0.084	0.68
		Right Tilted	0.203	0.084	0.29
		Left Cheek	0.447	0.084	0.53
		Left Tilted	0.191	0.084	0.28
WCMDA	Band V	Right Cheek	0.297	0.084	0.38
		Right Tilted	0.265	0.084	0.35
		Left Cheek	0.360	0.084	0.44
		Left Tilted	0.260	0.084	0.34
	Band IV	Right Cheek	0.616	0.084	0.70
		Right Tilted	0.163	0.084	0.25
		Left Cheek	0.432	0.084	0.52
		Left Tilted	0.151	0.084	0.24
	Band II	Right Cheek	0.565	0.084	0.65
		Right Tilted	0.157	0.084	0.24
		Left Cheek	0.505	0.084	0.59
		Left Tilted	0.216	0.084	0.30

16.2 Hotspot Exposure Conditions

<WWAN PCE + WLAN DTS>

WWAN Band		Exposure Position	WWAN PCE Max. WWAN SAR (W/kg)	WLAN DTS Max. WLAN SAR (W/kg)	Summed SAR (W/kg)
GSM	GSM850	Front	0.568	0.072	0.64
		Back	0.925	0.361	1.29
		Left side	0.551		0.55
		Right side	0.273	0.518	0.79
		Bottom side	0.256		0.26
	GSM1900	Front	0.731	0.072	0.80
		Back	1.103	0.361	1.46
		Left side	0.285		0.29
		Right side	0.503	0.518	1.02
		Bottom side	0.829		0.83
WCMDA	Band V	Front	0.312	0.072	0.38
		Back	0.540	0.361	0.90
		Left side	0.293		0.29
		Right side	0.152	0.518	0.67
		Bottom side	0.138		0.14
	Band IV	Front	0.709	0.072	0.78
		Back	1.192	0.361	**1.55**
		Left side	0.208		0.21
		Right side	0.521	0.518	1.04
		Bottom side	0.712		0.71
	Band II	Front	0.712	0.072	0.78
		Back	1.055	0.361	1.42
		Left side	0.279		0.28
		Right side	0.433	0.518	0.95
		Bottom side	0.844		0.84

<WWAN PCE + Bluetooth DSS>

WWAN Band		Exposure Position	WWAN PCE Max. WWAN SAR (W/kg)	Bluetooth DSS Max. Bluetooth SAR (W/kg)	Summed SAR (W/kg)
GSM	GSM850	Front	0.568	0.042	0.61
		Back	0.925	0.042	0.97
		Left side	0.551		0.55
		Right side	0.273	0.042	0.32
		Bottom side	0.256		0.26
	GSM1900	Front	0.731	0.042	0.77
		Back	1.103	0.042	1.15
		Left side	0.285		0.29
		Right side	0.503	0.042	0.55
		Bottom side	0.829		0.83
WCMDA	Band V	Front	0.312	0.042	0.35
		Back	0.540	0.042	0.58
		Left side	0.293		0.29
		Right side	0.152	0.042	0.19
		Bottom side	0.138		0.14
	Band IV	Front	0.709	0.042	0.75
		Back	1.192	0.042	**1.23**
		Left side	0.208		0.21
		Right side	0.521	0.042	0.56
		Bottom side	0.712		0.71
	Band II	Front	0.712	0.042	0.75
		Back	1.055	0.042	1.10
		Left side	0.279		0.28
		Right side	0.433	0.042	0.48
		Bottom side	0.844		0.84

16.3 Body-Worn Accessory Exposure Conditions

<WWAN PCE + WLAN DTS>

WWAN Band		Exposure Position	WWAN PCE Max. WWAN SAR (W/kg)	WLAN DTS Max. WLAN SAR (W/kg)	Summed SAR (W/kg)
GSM	GSM850	Front	0.568	0.072	0.64
		Back	0.925	0.361	1.29
	GSM1900	Front	0.731	0.072	0.80
		Back	1.103	0.361	1.46
WCMDA	Band V	Front	0.312	0.072	0.38
		Back	0.540	0.361	0.90
	Band IV	Front	0.709	0.072	0.78
		Back	1.192	0.361	**1.55**
	Band II	Front	0.712	0.072	0.78
		Back	1.055	0.361	1.42

<WWAN PCE + WLAN NII>

WWAN Band		Exposure Position	WWAN PCE Max. WWAN SAR (W/kg)	WLAN NII Max. WLAN SAR (W/kg)	Summed SAR (W/kg)
GSM	GSM850	Front	0.568	0.096	0.66
		Back	0.925	0.311	1.24
	GSM1900	Front	0.731	0.096	0.83
		Back	1.103	0.311	1.41
WCMDA	Band V	Front	0.312	0.096	0.41
		Back	0.540	0.311	0.85
	Band IV	Front	0.709	0.096	0.81
		Back	1.192	0.311	**1.50**
	Band II	Front	0.712	0.096	0.81
		Back	1.055	0.311	1.37

<WWAN PCE + Bluetooth DSS>

WWAN Band		Exposure Position	WWAN PCE Max. WWAN SAR (W/kg)	Bluetooth DSS Max. Bluetooth SAR (W/kg)	Summed SAR (W/kg)
GSM	GSM850	Front	0.568	0.042	0.61
		Back	0.925	0.042	0.97
	GSM1900	Front	0.731	0.042	0.77
		Back	1.103	0.042	1.15
WCMDA	Band V	Front	0.312	0.042	0.35
		Back	0.540	0.042	0.58
	Band IV	Front	0.709	0.042	0.75
		Back	1.192	0.042	**1.23**
	Band II	Front	0.712	0.042	0.75
		Back	1.055	0.042	1.10

Test Engineer : Kat Yin

17. Uncertainty Assessment

The component of uncertainly may generally be categorized according to the methods used to evaluate them. The evaluation of uncertainly by the statistical analysis of a series of observations is termed a Type An evaluation of uncertainty. The evaluation of uncertainty by means other than the statistical analysis of a series of observation is termed a Type B evaluation of uncertainty. Each component of uncertainty, however evaluated, is represented by an estimated standard deviation, termed standard uncertainty, which is determined by the positive square root of the estimated variance.

A Type A evaluation of standard uncertainty may be based on any valid statistical method for treating data. This includes calculating the standard deviation of the mean of a series of independent observations; using the method of least squares to fit a curve to the data in order to estimate the parameter of the curve and their standard deviations; or carrying out an analysis of variance in order to identify and quantify random effects in certain kinds of measurement.

A type B evaluation of standard uncertainty is typically based on scientific judgment using all of the relevant information available. These may include previous measurement data, experience, and knowledge of the behavior and properties of relevant materials and instruments, manufacture's specification, data provided in calibration reports and uncertainties assigned to reference data taken from handbooks. Broadly speaking, the uncertainty is either obtained from an outdoor source or obtained from an assumed distribution, such as the normal distribution, rectangular or triangular distributions indicated in table below.

Uncertainty Distributions	Normal	Rectangular	Triangular	U-Shape
Multi-plying Factor[(a)]	1/k[(b)]	1/√3	1/√6	1/√2

(a) standard uncertainty is determined as the product of the multiplying factor and the estimated range of variations in the measured quantity

(b) κ is the coverage factor

Table 17.1. Standard Uncertainty for Assumed Distribution

The combined standard uncertainty of the measurement result represents the estimated standard deviation of the result. It is obtained by combining the individual standard uncertainties of both Type A and Type B evaluation using the usual "root-sum-squares" (RSS) methods of combining standard deviations by taking the positive square root of the estimated variances.

Expanded uncertainty is a measure of uncertainty that defines an interval about the measurement result within which the measured value is confidently believed to lie. It is obtained by multiplying the combined standard uncertainty by a coverage factor. Typically, the coverage factor ranges from 2 to 3. Using a coverage factor allows the true value of a measured quantity to be specified with a defined probability within the specified uncertainty range. For purpose of this document, a coverage factor two is used, which corresponds to confidence interval of about 95 %. The DASY uncertainty Budget is shown in the following tables.

Error Description	Uncertainty Value (±%)	Probability Distribution	Divisor	Ci (1g)	Ci (10g)	Standard Uncertainty (1g)	Standard Uncertainty (10g)
Measurement System							
Probe Calibration	6.0	Normal	1	1	1	± 6.0 %	± 6.0 %
Axial Isotropy	4.7	Rectangular	√3	0.7	0.7	± 1.9 %	± 1.9 %
Hemispherical Isotropy	9.6	Rectangular	√3	0.7	0.7	± 3.9 %	± 3.9 %
Boundary Effects	1.0	Rectangular	√3	1	1	± 0.6 %	± 0.6 %
Linearity	4.7	Rectangular	√3	1	1	± 2.7 %	± 2.7 %
System Detection Limits	1.0	Rectangular	√3	1	1	± 0.6 %	± 0.6 %
Readout Electronics	0.3	Normal	1	1	1	± 0.3 %	± 0.3 %
Response Time	0.8	Rectangular	√3	1	1	± 0.5 %	± 0.5 %
Integration Time	2.6	Rectangular	√3	1	1	± 1.5 %	± 1.5 %
RF Ambient Noise	3.0	Rectangular	√3	1	1	± 1.7 %	± 1.7 %
RF Ambient Reflections	3.0	Rectangular	√3	1	1	± 1.7 %	± 1.7 %
Probe Positioner	0.4	Rectangular	√3	1	1	± 0.2 %	± 0.2 %
Probe Positioning	2.9	Rectangular	√3	1	1	± 1.7 %	± 1.7 %
Max. SAR Eval.	1.0	Rectangular	√3	1	1	± 0.6 %	± 0.6 %
Test Sample Related							
Device Positioning	2.9	Normal	1	1	1	± 2.9 %	± 2.9 %
Device Holder	3.6	Normal	1	1	1	± 3.6 %	± 3.6 %
Power Drift	5.0	Rectangular	√3	1	1	± 2.9 %	± 2.9 %
Phantom and Setup							
Phantom Uncertainty	4.0	Rectangular	√3	1	1	± 2.3 %	± 2.3 %
Liquid Conductivity (Target)	5.0	Rectangular	√3	0.64	0.43	± 1.8 %	± 1.2 %
Liquid Conductivity (Meas.)	2.5	Normal	1	0.64	0.43	± 1.6 %	± 1.1 %
Liquid Permittivity (Target)	5.0	Rectangular	√3	0.6	0.49	± 1.7 %	± 1.4 %
Liquid Permittivity (Meas.)	2.5	Normal	1	0.6	0.49	± 1.5 %	± 1.2 %
Combined Standard Uncertainty						± 11.0 %	± 10.8 %
Coverage Factor for 95 %						K=2	
Expanded Uncertainty						**± 22.0 %**	**± 21.5 %**

Table 17.2. Uncertainty Budget for frequency range 300 MHz to 3 GHz

Error Description	Uncertainty Value (±%)	Probability Distribution	Divisor	Ci (1g)	Ci (10g)	Standard Uncertainty (1g)	Standard Uncertainty (10g)
Measurement System							
Probe Calibration	6.55	Normal	1	1	1	± 6.55 %	± 6.55 %
Axial Isotropy	4.7	Rectangular	√3	0.7	0.7	± 1.9 %	± 1.9 %
Hemispherical Isotropy	9.6	Rectangular	√3	0.7	0.7	± 3.9 %	± 3.9 %
Boundary Effects	2.0	Rectangular	√3	1	1	± 1.2 %	± 1.2 %
Linearity	4.7	Rectangular	√3	1	1	± 2.7 %	± 2.7 %
System Detection Limits	1.0	Rectangular	√3	1	1	± 0.6 %	± 0.6 %
Readout Electronics	0.3	Normal	1	1	1	± 0.3 %	± 0.3 %
Response Time	0.8	Rectangular	√3	1	1	± 0.5 %	± 0.5 %
Integration Time	2.6	Rectangular	√3	1	1	± 1.5 %	± 1.5 %
RF Ambient Noise	3.0	Rectangular	√3	1	1	± 1.7 %	± 1.7 %
RF Ambient Reflections	3.0	Rectangular	√3	1	1	± 1.7 %	± 1.7 %
Probe Positioner	0.8	Rectangular	√3	1	1	± 0.5 %	± 0.5 %
Probe Positioning	9.9	Rectangular	√3	1	1	± 5.7 %	± 5.7 %
Max. SAR Eval.	4.0	Rectangular	√3	1	1	± 2.3 %	± 2.3 %
Test Sample Related							
Device Positioning	2.9	Normal	1	1	1	± 2.9 %	± 2.9 %
Device Holder	3.6	Normal	1	1	1	± 3.6 %	± 3.6 %
Power Drift	5.0	Rectangular	√3	1	1	± 2.9 %	± 2.9 %
Phantom and Setup							
Phantom Uncertainty	4.0	Rectangular	√3	1	1	± 2.3 %	± 2.3 %
Liquid Conductivity (Target)	5.0	Rectangular	√3	0.64	0.43	± 1.8 %	± 1.2 %
Liquid Conductivity (Meas.)	2.5	Normal	1	0.64	0.43	± 1.6 %	± 1.1 %
Liquid Permittivity (Target)	5.0	Rectangular	√3	0.6	0.49	± 1.7 %	± 1.4 %
Liquid Permittivity (Meas.)	2.5	Normal	1	0.6	0.49	± 1.5 %	± 1.2 %
Combined Standard Uncertainty						± 12.8 %	± 12.6 %
Coverage Factor for 95 %						K=2	
Expanded Uncertainty						**± 25.6 %**	**± 25.2 %**

Table 17.1. Uncertainty Budget for frequency range 3 GHz to 6 GHz

18. References

[1] FCC 47 CFR Part 2 “Frequency Allocations and Radio Treaty Matters; General Rules and Regulations”

[2] ANSI/IEEE Std. C95.1-1992, “IEEE Standard for Safety Levels with Respect to Human Exposure to Radio Frequency Electromagnetic Fields, 3 kHz to 300 GHz”, September 1992

[3] IEEE Std. 1528-2003, “Recommended Practice for Determining the Peak Spatial-Average Specific Absorption Rate (SAR) in the Human Head from Wireless Communications Devices: Measurement Techniques”, December 2003

[4] SPEAG DASY System Handbook

[5] FCC KDB 865664 D01 v01r03 "SAR Measurement Requirements for 100 MHz to 6 GHz", Feb 2014.

[6] FCC KDB 865664 D02 v01r01, “RF Exposure Compliance Reporting and Documentation Considerations”, May 2013

[7] FCC KDB 447498 D01 v05r02 General RF Exposure Guidance “Mobile and Portable Device RF Exposure Procedures and Equipment Authorization Policies”, Feb 2014.

[8] FCC KDB 648474 D04 v01r01r02, “SAR Evaluation Considerations for Wireless Handsets”, Dec 2013

[9] FCC KDB 248227 D01 v01r02, “SAR Measurement Procedures for 802.11 a/b/g Transmitters”, May 2007

[10] FCC KDB 941225 D01 v02, “SAR Measurement Procedures for 3G Devices – CDMA 2000 / Ev-Do / WCDMA / HSDPA / HSPA”, October 2007

[11] FCC KDB 941225 D02 v02r02, “SAR Guidance for HSPA, HSPA+, DC-HSDPA and 1x-Advanced”, May 2013.

[12] FCC KDB 941225 D03 v01, “Recommended SAR Test Reduction Procedures for GSM / GPRS / EDGE”, December 2008

[13] FCC KDB 941225 D06 v01r01, "SAR Evaluation Procedures for Portable Devices with Wireless Router Capabilities", May 2013

Appendix A. Plots of System Performance Check

The plots are shown as follows.

Test Laboratory: Sporton International Inc. SAR/HAC Testing Lab Date: 2014/6/4

System Check_Head_835MHz_140604

DUT: D835V2 - SN: 4d151

Communication System: CW; Frequency: 835 MHz;Duty Cycle: 1:1
Medium: HSL_850_140604 Medium parameters used: f = 835 MHz; σ = 0.902 S/m; ε_r = 40.749; ρ = 1000 kg/m^3
Ambient Temperature：23.5 ℃; Liquid Temperature ：22.7 ℃

DASY5 Configuration:
- Probe: EX3DV4 - SN3898; ConvF(9.85, 9.85, 9.85); Calibrated: 2014/3/10;
- Sensor-Surface: 2mm (Mechanical Surface Detection)
- Electronics: DAE4 Sn1353; Calibrated: 2014/1/30
- Phantom: SAM1; Type: QD000P40CD; Serial: TP:1753
- Measurement SW: DASY52, Version 52.8 (5); SEMCAD X Version 14.6.8 (7028)

Pin=250mW/Area Scan (61x61x1): Interpolated grid: dx=15mm, dy=15mm
Maximum value of SAR (interpolated) = 3.19 W/kg

Pin=250mW/Zoom Scan (5x5x7)/Cube 0: Measurement grid: dx=8mm, dy=8mm, dz=5mm
Reference Value = 60.278 V/m; Power Drift = 0.02 dB
Peak SAR (extrapolated) = 3.81 W/kg
SAR(1 g) = 2.52 W/kg; SAR(10 g) = 1.64 W/kg
Maximum value of SAR (measured) = 3.20 W/kg

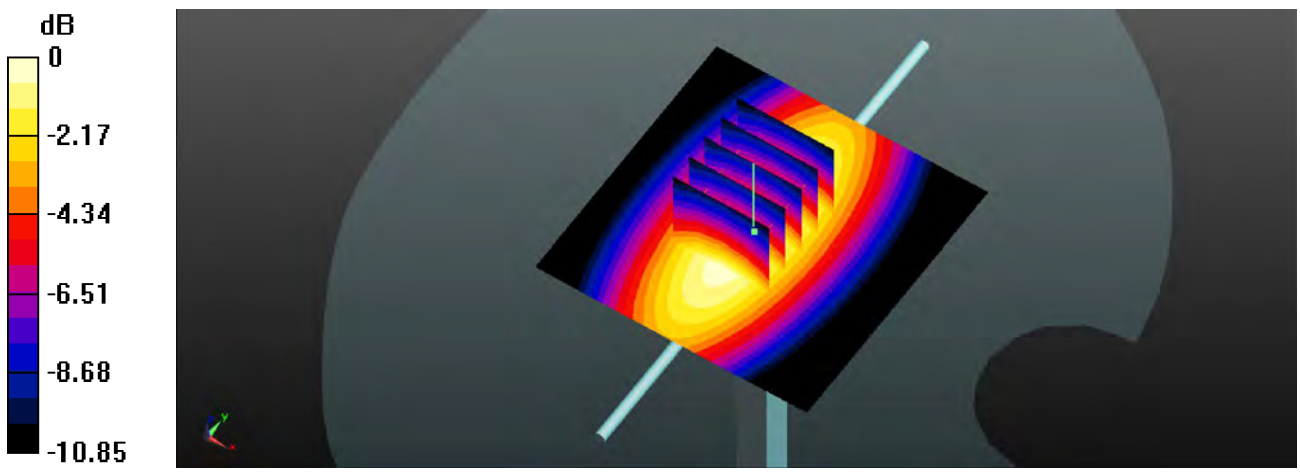

0 dB = 3.20 W/kg

Test Laboratory: Sporton International Inc. SAR/HAC Testing Lab Date: 2014/6/11

System Check_Head_1750MHz_140611

DUT: D1750V2 - SN: 1090

Communication System: CW; Frequency: 1750 MHz;Duty Cycle: 1:1
Medium: HSL_1750_140611 Medium parameters used: f = 1750 MHz; σ = 1.378 S/m; ε_r = 41.34; ρ = 1000 kg/m^3
Ambient Temperature：23.5 ℃; Liquid Temperature ：22.5 ℃

DASY5 Configuration:
- Probe: EX3DV4 - SN3898; ConvF(8.38, 8.38, 8.38); Calibrated: 2014/3/10;
- Sensor-Surface: 2mm (Mechanical Surface Detection)
- Electronics: DAE4 Sn1353; Calibrated: 2014/1/30
- Phantom: SAM1; Type: QD000P40CD; Serial: TP:1753
- Measurement SW: DASY52, Version 52.8 (5); SEMCAD X Version 14.6.8 (7028)

Pin=250mW/Area Scan (61x61x1): Interpolated grid: dx=15mm, dy=15mm
Maximum value of SAR (interpolated) = 13.2 W/kg

Pin=250mW/Zoom Scan (5x5x7)/Cube 0: Measurement grid: dx=8mm, dy=8mm, dz=5mm
Reference Value = 98.056 V/m; Power Drift = 0.02 dB
Peak SAR (extrapolated) = 16.9 W/kg
SAR(1 g) = 9.17 W/kg; SAR(10 g) = 4.82 W/kg
Maximum value of SAR (measured) = 13.0 W/kg

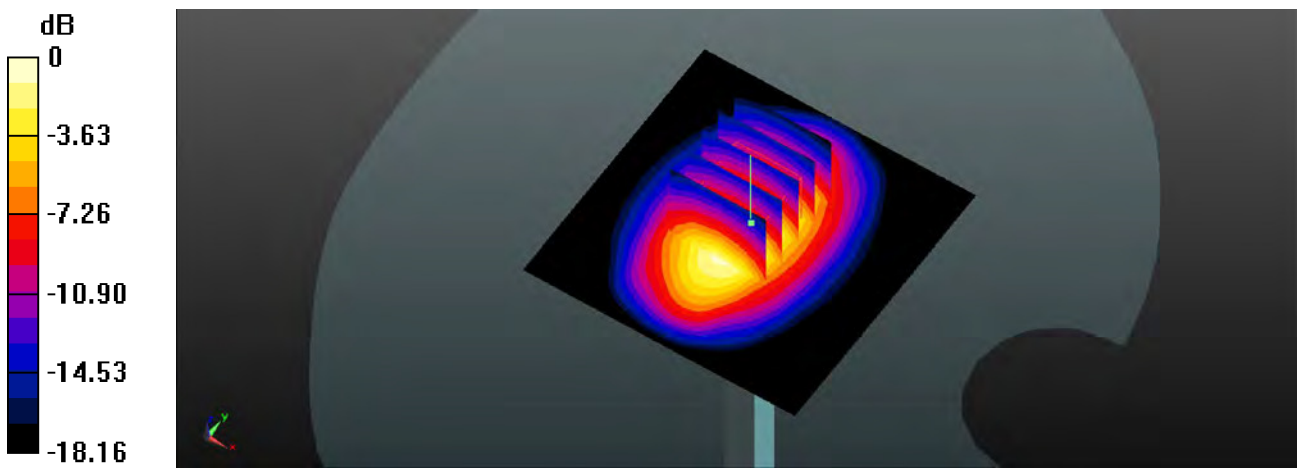

0 dB = 13.0 W/kg

Test Laboratory: Sporton International Inc. SAR/HAC Testing Lab Date: 2014/6/4

System Check_Head_1900MHz_140604

DUT: D1900V2 - SN: 5d170

Communication System: CW; Frequency: 1900 MHz;Duty Cycle: 1:1
Medium: HSL_1900_140604 Medium parameters used: f = 1900 MHz; σ = 1.412 S/m; ε_r = 39.311; ρ = 1000 kg/m^3
Ambient Temperature：23.5 ℃; Liquid Temperature ：22.5 ℃

DASY5 Configuration:
- Probe: EX3DV4 - SN3898; ConvF(8.2, 8.2, 8.2); Calibrated: 2014/3/10;
- Sensor-Surface: 2mm (Mechanical Surface Detection)
- Electronics: DAE4 Sn1353; Calibrated: 2014/1/30
- Phantom: SAM2; Type: QD000P40CD; Serial: TP:1754
- Measurement SW: DASY52, Version 52.8 (5); SEMCAD X Version 14.6.8 (7028)

Pin=250mW/Area Scan (61x61x1): Interpolated grid: dx=15mm, dy=15mm
Maximum value of SAR (interpolated) = 13.4 W/kg

Pin=250mW/Zoom Scan (5x5x7)/Cube 0: Measurement grid: dx=8mm, dy=8mm, dz=5mm
Reference Value = 95.738 V/m; Power Drift = -0.07 dB
Peak SAR (extrapolated) = 17.0 W/kg
SAR(1 g) = 9.29 W/kg; SAR(10 g) = 4.83 W/kg
Maximum value of SAR (measured) = 13.2 W/kg

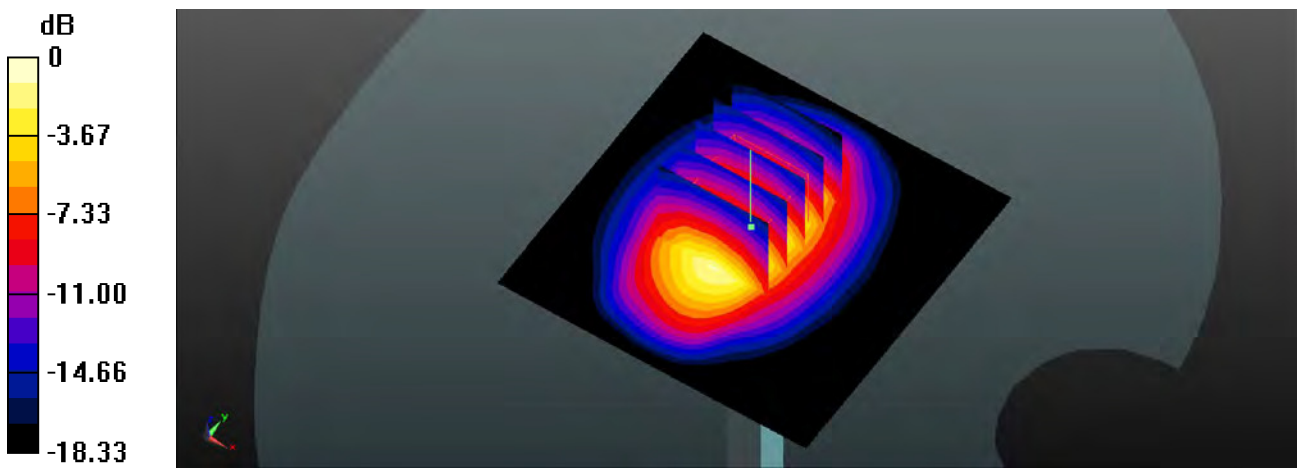

0 dB = 13.2 W/kg

Test Laboratory: Sporton International Inc. SAR/HAC Testing Lab Date: 2014.06.03

System Check_Head_2450MHz_140603

DUT: D2450V2 - SN: 736

Communication System: CW; Frequency: 2450 MHz;Duty Cycle: 1:1
Medium: HSL_2450_140603 Medium parameters used: f = 2450 MHz; σ = 1.819 mho/m; ε_r = 39.217; ρ = 1000 kg/m^3
Ambient Temperature：23.4 ℃; Liquid Temperature：22.6 ℃

DASY5 Configuration:
- Probe: EX3DV4 - SN3911; ConvF(7.04, 7.04, 7.04); Calibrated: 2014.04.22
- Sensor-Surface: 2mm (Mechanical Surface Detection)
- Electronics: DAE4 Sn1358; Calibrated: 2014.04.30
- Phantom: SAM1; Type: SAM; Serial: TP-1479
- Measurement SW: DASY52, Version 52.8 (7); SEMCAD X Version 14.4.5 (3634)

Pin=250mW/Area Scan (71x71x1): Measurement grid: dx=12mm, dy=12mm
Maximum value of SAR (interpolated) = 21.806 mW/g

Pin=250mW/Zoom Scan (7x7x7)/Cube 0: Measurement grid: dx=5mm, dy=5mm, dz=5mm
Reference Value = 91.390 V/m; Power Drift = 0.10 dB
Peak SAR (extrapolated) = 28.047 W/kg
SAR(1 g) = 13.3 mW/g; SAR(10 g) = 6.05 mW/g
Maximum value of SAR (measured) = 20.652 mW/g

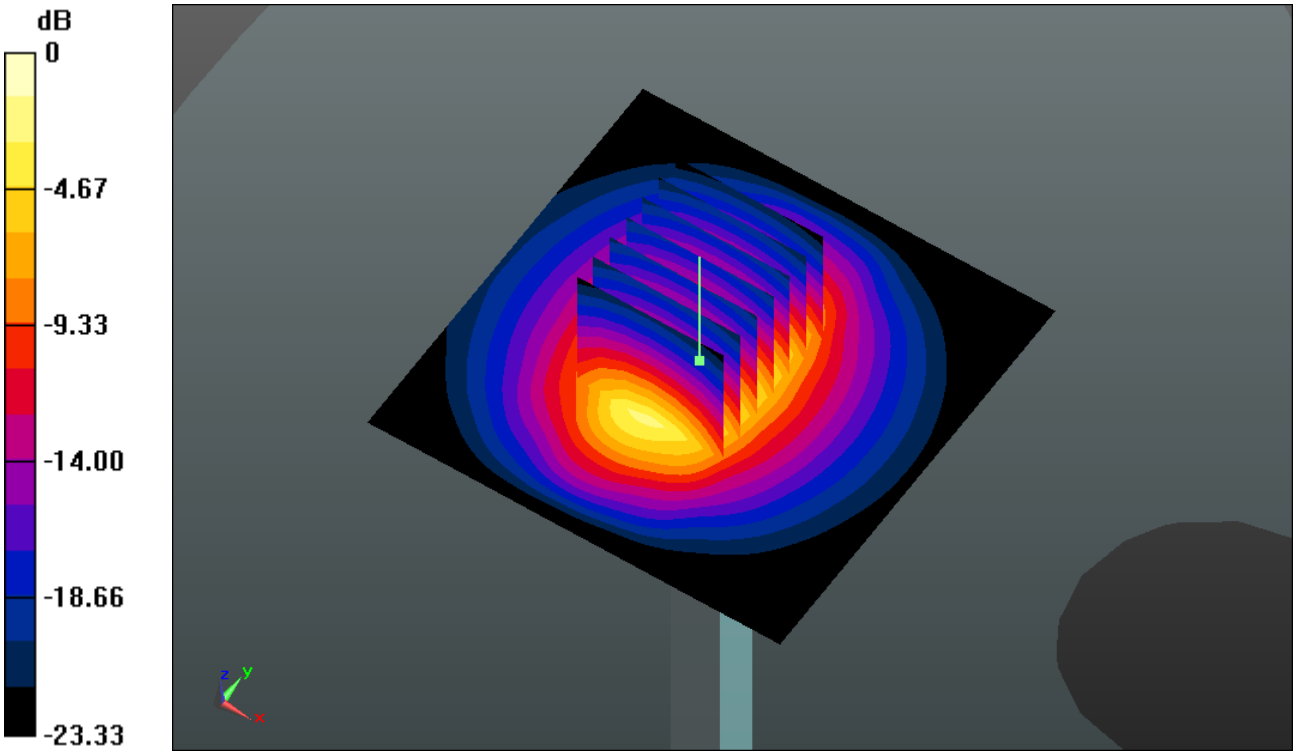

0 dB = 20.650mW/g

Test Laboratory: Sporton International Inc. SAR/HAC Testing Lab Date: 2014.06.05

System Check_Head_5200MHz_140605

DUT: D5GHzV2 - SN: 1006

Communication System: CW; Frequency: 5200 MHz;Duty Cycle: 1:1
Medium: HSL_5000_140605 Medium parameters used: f = 5200 MHz; σ = 4.803 mho/m; ε_r = 35.472; ρ = 1000 kg/m^3
Ambient Temperature：23.2 ℃; Liquid Temperature：22.9 ℃

DASY5 Configuration:
- Probe: EX3DV4 - SN3753; ConvF(4.83, 4.83, 4.83); Calibrated: 2014.03.26
- Sensor-Surface: 1.4mm (Mechanical Surface Detection)
- Electronics: DAE4 Sn1358; Calibrated: 2014.04.30
- Phantom: SAM2; Type: SAM; Serial: TP-1477
- Measurement SW: DASY52, Version 52.8 (7); SEMCAD X Version 14.4.5 (3634)

Pin=100mW/Area Scan (71x71x1): Measurement grid: dx=10mm, dy=10mm
Maximum value of SAR (interpolated) = 18.383 mW/g

Pin=100mW/Zoom Scan (8x8x7)/Cube 0: Measurement grid: dx=4mm, dy=4mm, dz=1.4mm
Reference Value = 43.047 V/m; Power Drift = -0.11 dB
Peak SAR (extrapolated) = 32.146 W/kg
SAR(1 g) = 7.83 mW/g; SAR(10 g) = 2.24 mW/g
Maximum value of SAR (measured) = 18.240 mW/g

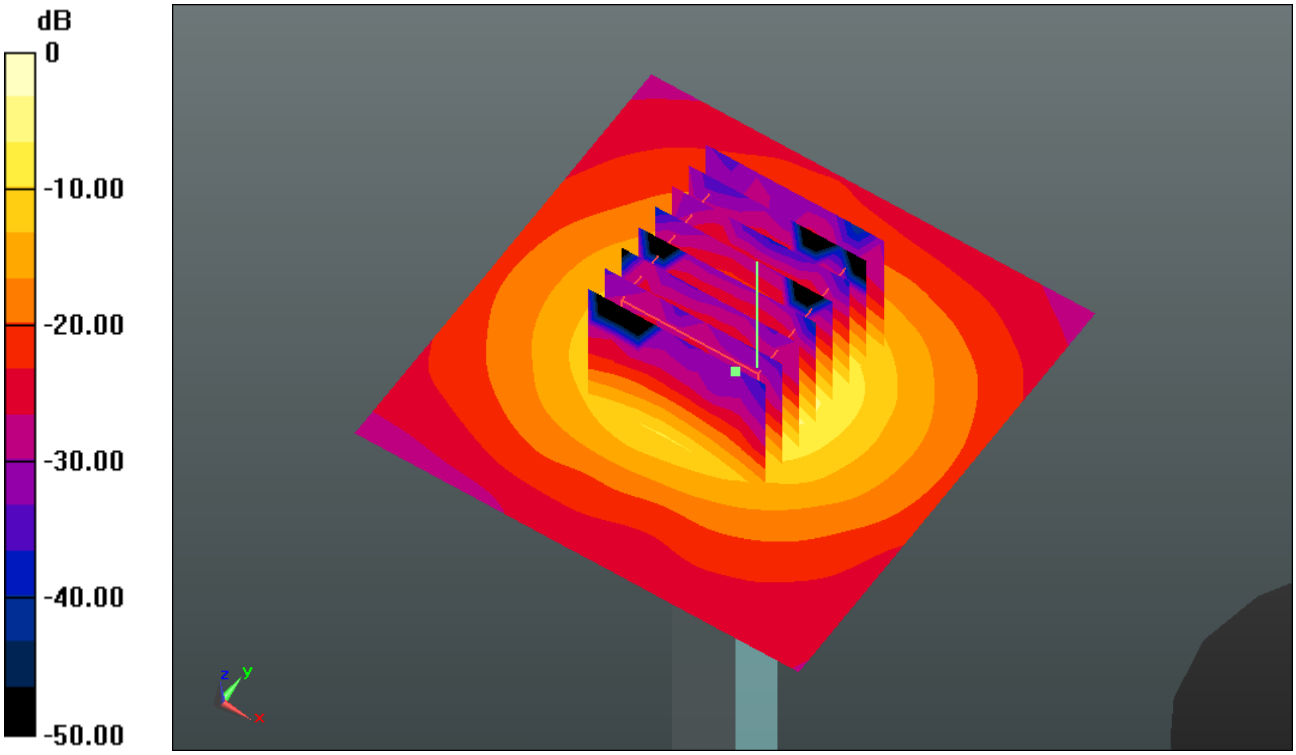

0 dB = 18.240mW/g

Test Laboratory: Sporton International Inc. SAR/HAC Testing Lab Date: 2014.06.05

System Check_Head_5300MHz_140605

DUT: D5GHzV2 - SN: 1006

Communication System: CW; Frequency: 5300 MHz;Duty Cycle: 1:1
Medium: HSL_5000_140605 Medium parameters used: f = 5300 MHz; σ = 4.91 mho/m; ε_r = 35.343; ρ = 1000 kg/m^3
Ambient Temperature：23.2 ℃； Liquid Temperature：22.9 ℃

DASY5 Configuration:
- Probe: EX3DV4 - SN3753; ConvF(4.92, 4.92, 4.92); Calibrated: 2014.03.26
- Sensor-Surface: 1.4mm (Mechanical Surface Detection)
- Electronics: DAE4 Sn1358; Calibrated: 2014.04.30
- Phantom: SAM2; Type: SAM; Serial: TP-1477
- Measurement SW: DASY52, Version 52.8 (7); SEMCAD X Version 14.4.5 (3634)

Pin=100mW/Area Scan (71x71x1): Measurement grid: dx=10mm, dy=10mm
Maximum value of SAR (interpolated) = 22.402 mW/g

Pin=100mW/Zoom Scan (8x8x7)/Cube 0: Measurement grid: dx=4mm, dy=4mm, dz=1.4mm
Reference Value = 43.539 V/m; Power Drift = -0.14 dB
Peak SAR (extrapolated) = 35.599 W/kg
SAR(1 g) = 8.32 mW/g; SAR(10 g) = 2.35 mW/g
Maximum value of SAR (measured) = 19.489 mW/g

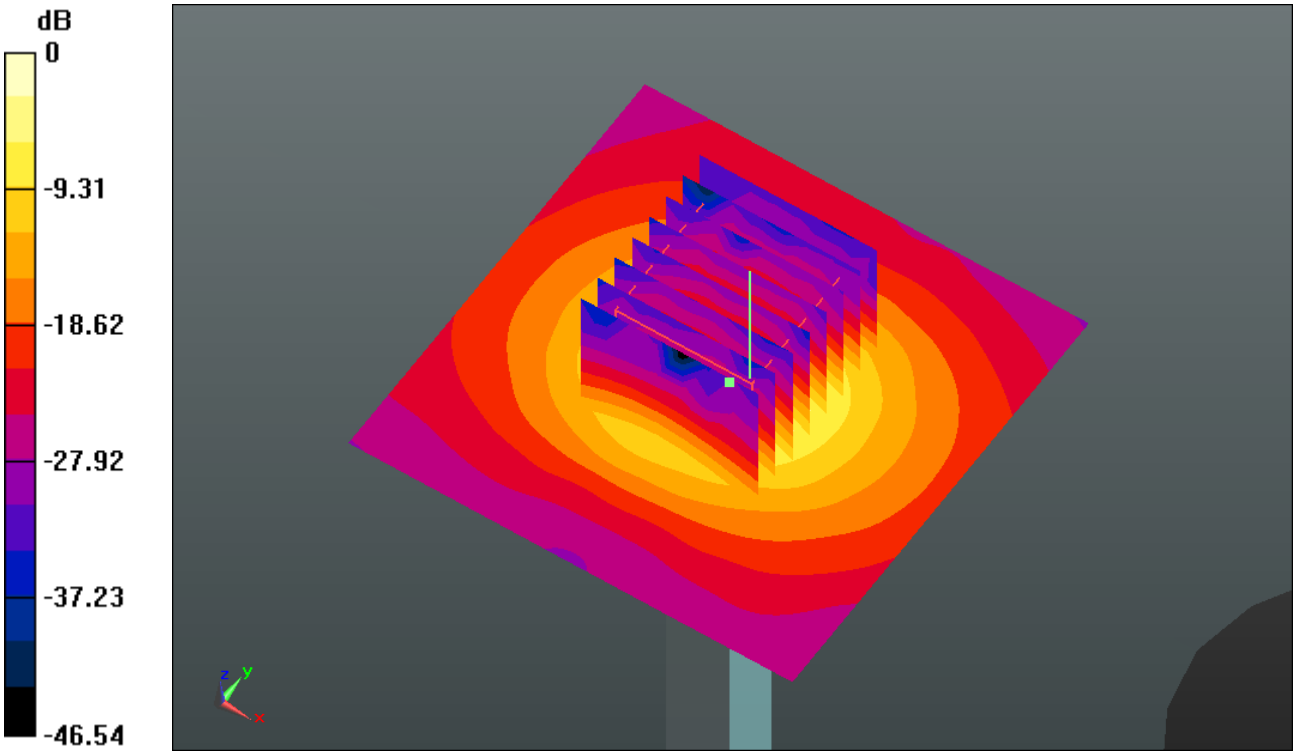

0 dB = 19.490mW/g

Test Laboratory: Sporton International Inc. SAR/HAC Testing Lab Date: 2014.06.18

System Check_Head_5600MHz_140618

DUT: D5GHzV2 - SN: 1006

Communication System: CW; Frequency: 5600 MHz;Duty Cycle: 1:1
Medium: HSL_5000_140618 Medium parameters used: f = 5600 MHz; σ = 5.218 mho/m; ε_r = 34.737; ρ = 1000 kg/m^3
Ambient Temperature：23.2 ℃； Liquid Temperature：22.7 ℃

DASY5 Configuration:
- Probe: EX3DV4 - SN3857; ConvF(4.56, 4.56, 4.56); Calibrated: 2014.05.23
- Sensor-Surface: 1.4mm (Mechanical Surface Detection)
- Electronics: DAE4 Sn1210; Calibrated: 2014.05.19
- Phantom: SAM2; Type: SAM; Serial: TP-1477
- Measurement SW: DASY52, Version 52.8 (7); SEMCAD X Version 14.4.5 (3634)

Pin=100mW/Area Scan (71x71x1): Measurement grid: dx=10mm, dy=10mm
Maximum value of SAR (interpolated) = 17.583 mW/g

Pin=100mW/Zoom Scan (7x7x7)/Cube 0: Measurement grid: dx=4mm, dy=4mm, dz=1.4mm
Reference Value = 42.710 V/m; Power Drift = 0.01 dB
Peak SAR (extrapolated) = 30.553 W/kg
SAR(1 g) = 7.65 mW/g; SAR(10 g) = 2.18 mW/g
Maximum value of SAR (measured) = 17.675 mW/g

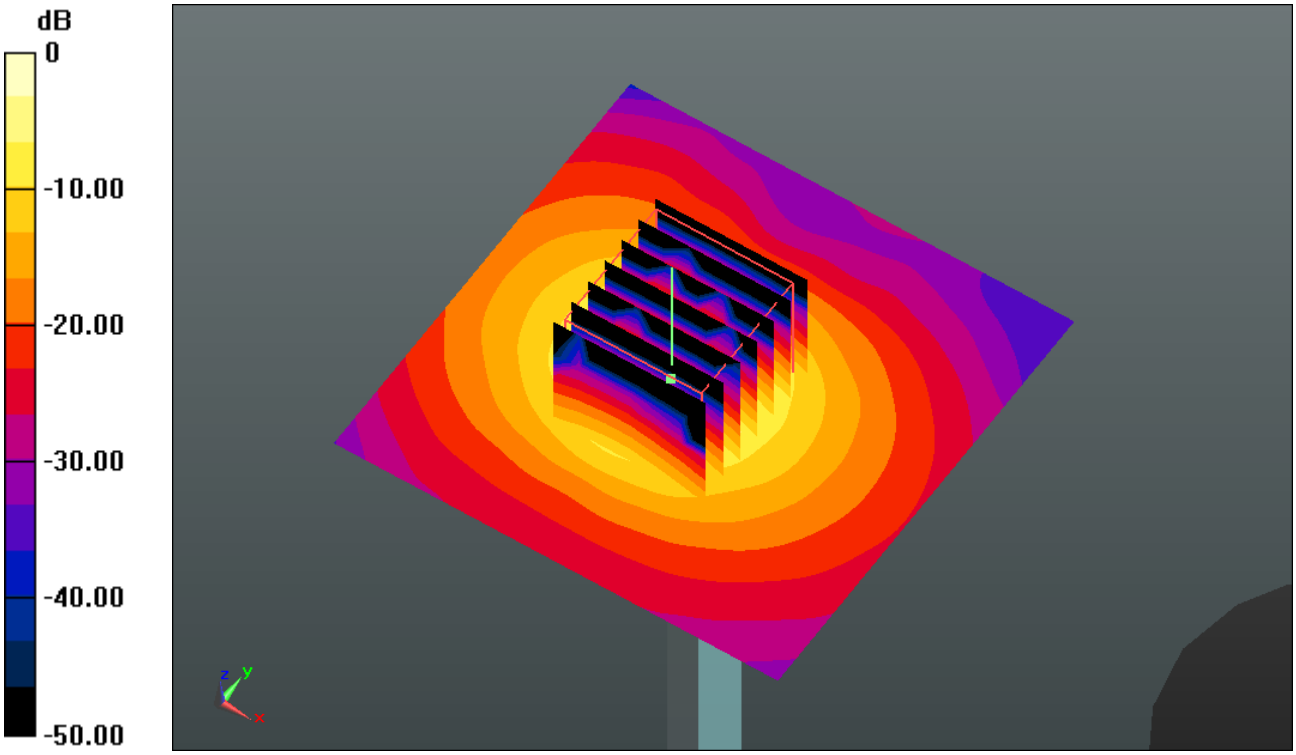

0 dB = 17.680mW/g

Test Laboratory: Sporton International Inc. SAR/HAC Testing Lab Date: 2014.06.05

System Check_Head_5800MHz_140605

DUT: D5GHzV2 - SN: 1006

Communication System: CW; Frequency: 5800 MHz;Duty Cycle: 1:1
Medium: HSL_5000_140605 Medium parameters used: f = 5800 MHz; σ = 5.406 mho/m; ε_r = 34.362; ρ = 1000 kg/m^3
Ambient Temperature：23.2 ℃； Liquid Temperature：22.9 ℃

DASY5 Configuration:
- Probe: EX3DV4 - SN3753; ConvF(4.58, 4.58, 4.58); Calibrated: 2014.03.26
- Sensor-Surface: 1.4mm (Mechanical Surface Detection)
- Electronics: DAE4 Sn1358; Calibrated: 2014.04.30
- Phantom: SAM2; Type: SAM; Serial: TP-1477
- Measurement SW: DASY52, Version 52.8 (7); SEMCAD X Version 14.4.5 (3634)

Pin=100mW/Area Scan (71x71x1): Measurement grid: dx=10mm, dy=10mm
Maximum value of SAR (interpolated) = 19.360 mW/g

Pin=100mW/Zoom Scan (8x8x7)/Cube 0: Measurement grid: dx=4mm, dy=4mm, dz=1.4mm
Reference Value = 38.990 V/m; Power Drift = -0.10 dB
Peak SAR (extrapolated) = 34.765 W/kg
SAR(1 g) = 7.73 mW/g; SAR(10 g) = 2.23 mW/g
Maximum value of SAR (measured) = 19.517 mW/g

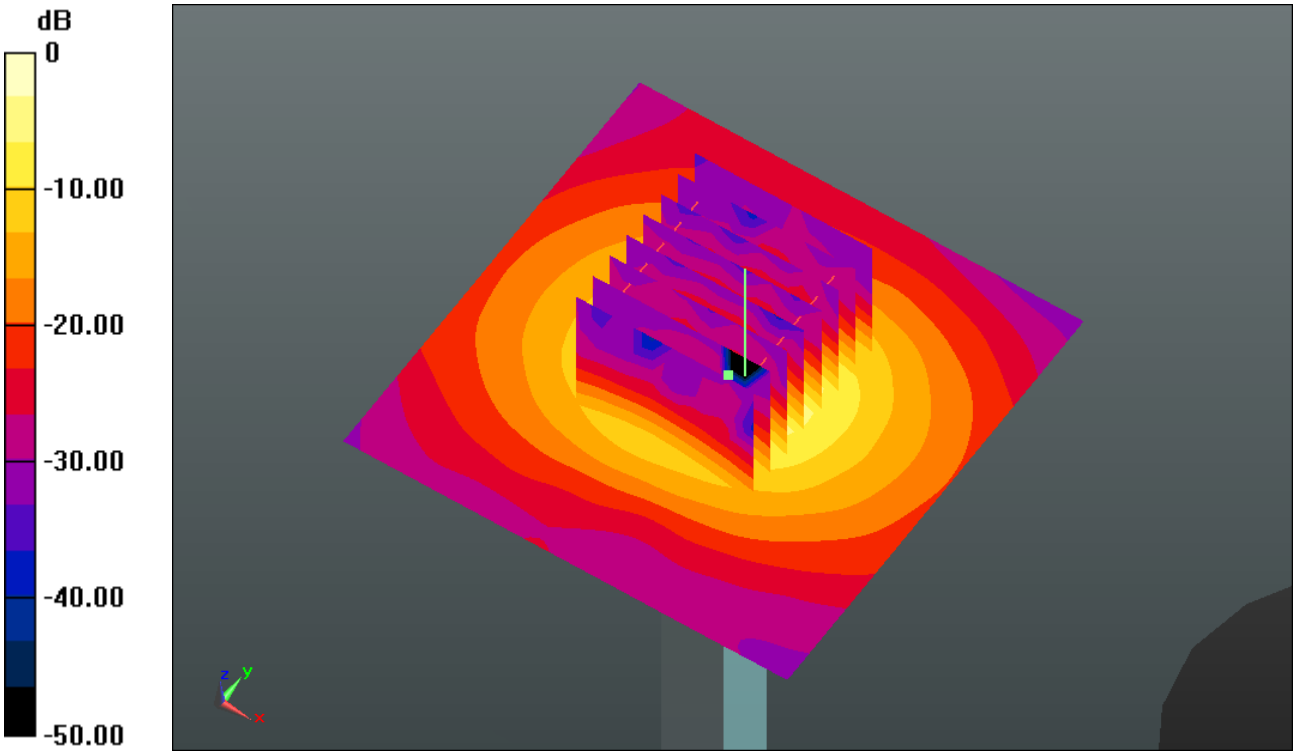

0 dB = 19.520mW/g

Test Laboratory: Sporton International Inc. SAR/HAC Testing Lab Date: 2014/6/3

System Check_Body_835MHz_140603

DUT: D835V2 - SN: 4d151

Communication System: CW; Frequency: 835 MHz;Duty Cycle: 1:1
Medium: MSL_835_140603 Medium parameters used: f = 835 MHz; σ = 0.974 S/m; ε_r = 54.204; ρ = 1000 kg/m^3
Ambient Temperature：23.4 ℃; Liquid Temperature ：22.4 ℃

DASY5 Configuration:
- Probe: EX3DV4 - SN3898; ConvF(9.63, 9.63, 9.63); Calibrated: 2014/3/10;
- Sensor-Surface: 2mm (Mechanical Surface Detection)
- Electronics: DAE4 Sn1353; Calibrated: 2014/1/30
- Phantom: SAM1; Type: QD000P40CD; Serial: TP:1753
- Measurement SW: DASY52, Version 52.8 (5); SEMCAD X Version 14.6.8 (7028)

Pin=250mW/Area Scan (61x61x1): Interpolated grid: dx=15mm, dy=15mm
Maximum value of SAR (interpolated) = 2.40 W/kg

Pin=250mW/Zoom Scan (5x5x7)/Cube 0: Measurement grid: dx=8mm, dy=8mm, dz=5mm
Reference Value = 49.515 V/m; Power Drift = 0.03 dB
Peak SAR (extrapolated) = 3.26 W/kg
SAR(1 g) = 2.23 W/kg; SAR(10 g) = 1.47 W/kg
Maximum value of SAR (measured) = 2.39 W/kg

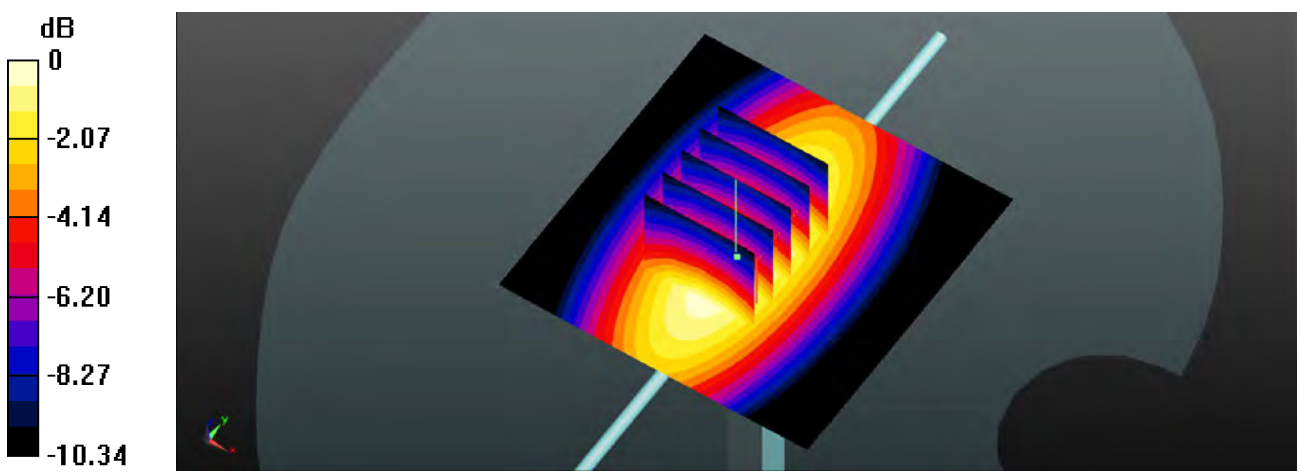

0 dB = 2.39 W/kg

Test Laboratory: Sporton International Inc. SAR/HAC Testing Lab Date: 2014/6/11

System Check_Body_1750MHz_140611

DUT: D1750V2 - SN: 1090

Communication System: CW; Frequency: 1750 MHz;Duty Cycle: 1:1
Medium: MSL_1750_140611 Medium parameters used: f = 1750 MHz; σ = 1.522 S/m; ε_r = 54.439; ρ = 1000 kg/m^3
Ambient Temperature：23.5 ℃; Liquid Temperature ：22.5 ℃

DASY5 Configuration:
- Probe: EX3DV4 - SN3898; ConvF(8.16, 8.16, 8.16); Calibrated: 2014/3/10;
- Sensor-Surface: 2mm (Mechanical Surface Detection)
- Electronics: DAE4 Sn1353; Calibrated: 2014/1/30
- Phantom: SAM1; Type: QD000P40CD; Serial: TP:1753
- Measurement SW: DASY52, Version 52.8 (5); SEMCAD X Version 14.6.8 (7028)

Pin=250mW/Area Scan (61x61x1): Interpolated grid: dx=15mm, dy=15mm
Maximum value of SAR (interpolated) = 13.4 W/kg

Pin=250mW/Zoom Scan (5x5x7)/Cube 0: Measurement grid: dx=8mm, dy=8mm, dz=5mm
Reference Value = 95.311 V/m; Power Drift = 0.03 dB
Peak SAR (extrapolated) = 16.7 W/kg
SAR(1 g) = 9.56 W/kg; SAR(10 g) = 5.11 W/kg
Maximum value of SAR (measured) = 13.3 W/kg

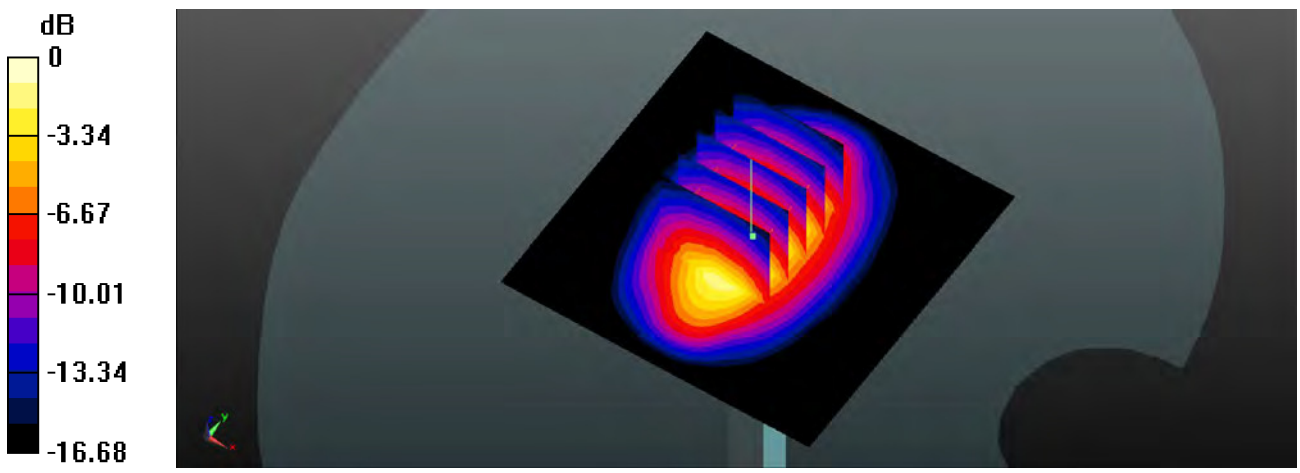

0 dB = 13.3 W/kg

Test Laboratory: Sporton International Inc. SAR/HAC Testing Lab Date: 2014/6/3

System Check_Body_1900MHz_140603

DUT: D1900V2 - SN: 5d170

Communication System: CW; Frequency: 1900 MHz;Duty Cycle: 1:1
Medium: MSL_1900_140603 Medium parameters used: f = 1900 MHz; σ = 1.53 S/m; ε_r = 55.281; ρ = 1000 kg/m^3
Ambient Temperature：23.5 ℃; Liquid Temperature ：22.6 ℃

DASY5 Configuration:
- Probe: EX3DV4 - SN3898; ConvF(7.83, 7.83, 7.83); Calibrated: 2014/3/10;
- Sensor-Surface: 2mm (Mechanical Surface Detection)
- Electronics: DAE4 Sn1353; Calibrated: 2014/1/30
- Phantom: SAM1; Type: QD000P40CD; Serial: TP:1753
- Measurement SW: DASY52, Version 52.8 (5); SEMCAD X Version 14.6.8 (7028)

Pin=250mW/Area Scan (61x61x1): Interpolated grid: dx=15mm, dy=15mm
Maximum value of SAR (interpolated) = 14.5 W/kg

Pin=250mW/Zoom Scan (5x5x7)/Cube 0: Measurement grid: dx=8mm, dy=8mm, dz=5mm
Reference Value = 85.978 V/m; Power Drift = 0.04 dB
Peak SAR (extrapolated) = 18.5 W/kg
SAR(1 g) = 10.2 W/kg; SAR(10 g) = 5.29 W/kg
Maximum value of SAR (measured) = 14.6 W/kg

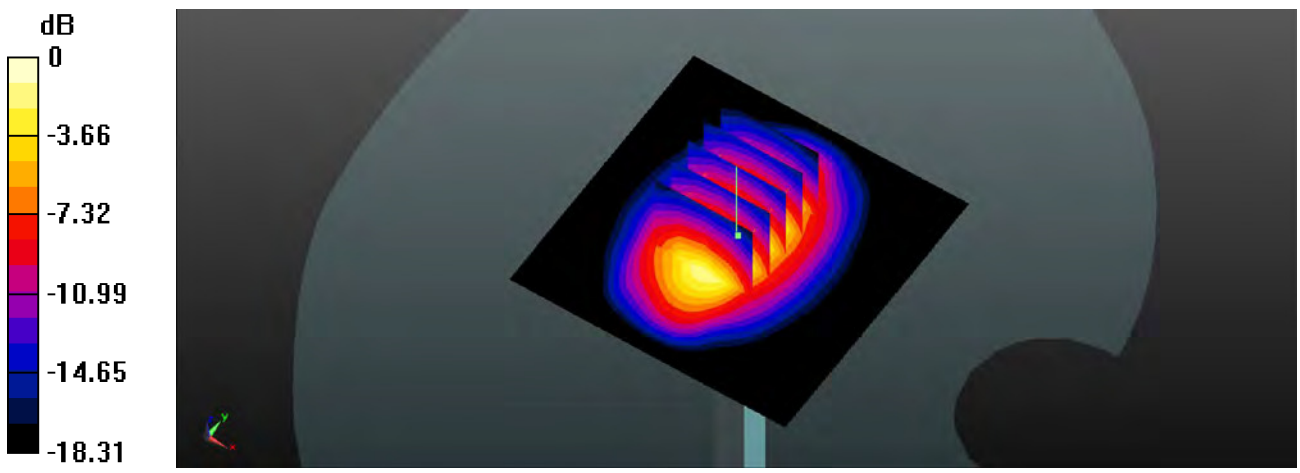

0 dB = 14.6 W/kg

Test Laboratory: Sporton International Inc. SAR/HAC Testing Lab Date: 2014.06.08

System Check_Body_2450MHz_140608

DUT: D2450V2 - SN: 736

Communication System: CW; Frequency: 2450 MHz;Duty Cycle: 1:1
Medium: MSL_2450_140608 Medium parameters used: f = 2450 MHz; σ = 1.936 mho/m; ε_r = 51.329; ρ = 1000 kg/m^3
Ambient Temperature：23.3 ℃; Liquid Temperature：22.7 ℃

DASY5 Configuration:
- Probe: EX3DV4 - SN3753; ConvF(7.31, 7.31, 7.31); Calibrated: 2014.03.26
- Sensor-Surface: 2mm (Mechanical Surface Detection)
- Electronics: DAE4 Sn1358; Calibrated: 2014.04.30
- Phantom: SAM1; Type: SAM; Serial: TP-1479
- Measurement SW: DASY52, Version 52.8 (7); SEMCAD X Version 14.4.5 (3634)

Pin=250mW/Area Scan (81x81x1): Measurement grid: dx=12mm, dy=12mm
Maximum value of SAR (interpolated) = 19.467 mW/g

Pin=250mW/Zoom Scan (7x7x7)/Cube 0: Measurement grid: dx=5mm, dy=5mm, dz=5mm
Reference Value = 85.743 V/m; Power Drift = -0.09 dB
Peak SAR (extrapolated) = 25.730 W/kg
SAR(1 g) = 12.3 mW/g; SAR(10 g) = 5.75 mW/g
Maximum value of SAR (measured) = 18.474 mW/g

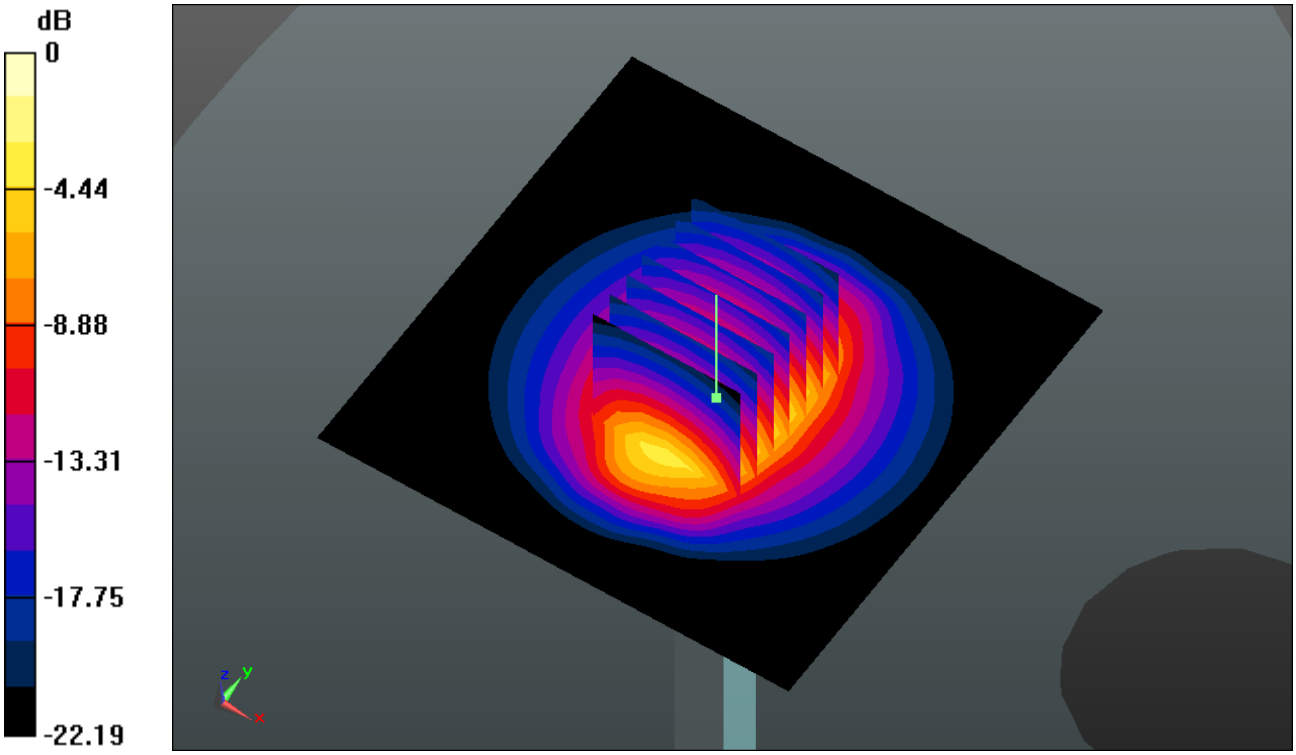

0 dB = 18.470mW/g

Test Laboratory: Sporton International Inc. SAR/HAC Testing Lab Date: 2014.06.13

System Check_Body_5200MHz_140613

DUT: D5GHzV2 - SN: 1006

Communication System: CW; Frequency: 5200 MHz;Duty Cycle: 1:1
Medium: MSL_5000_140613 Medium parameters used: f = 5200 MHz; σ = 5.162 mho/m; ε_r = 48.492; ρ = 1000 kg/m^3
Ambient Temperature：23.5 ℃； Liquid Temperature：22.6 ℃

DASY5 Configuration:
- Probe: EX3DV4 - SN3753; ConvF(4.67, 4.67, 4.67); Calibrated: 2014.03.26
- Sensor-Surface: 1.4mm (Mechanical Surface Detection)
- Electronics: DAE4 Sn1358; Calibrated: 2014.04.30
- Phantom: SAM2; Type: SAM; Serial: TP-1477
- Measurement SW: DASY52, Version 52.8 (7); SEMCAD X Version 14.4.5 (3634)

Pin=100mW/Area Scan (71x71x1): Measurement grid: dx=10mm, dy=10mm
Maximum value of SAR (interpolated) = 17.615 mW/g

Pin=100mW/Zoom Scan (8x8x7)/Cube 0: Measurement grid: dx=4mm, dy=4mm, dz=1.4mm
Reference Value = 40.551 V/m; Power Drift = 0.03 dB
Peak SAR (extrapolated) = 31.488 W/kg
SAR(1 g) = 7.42 mW/g; SAR(10 g) = 2.12 mW/g
Maximum value of SAR (measured) = 17.323 mW/g

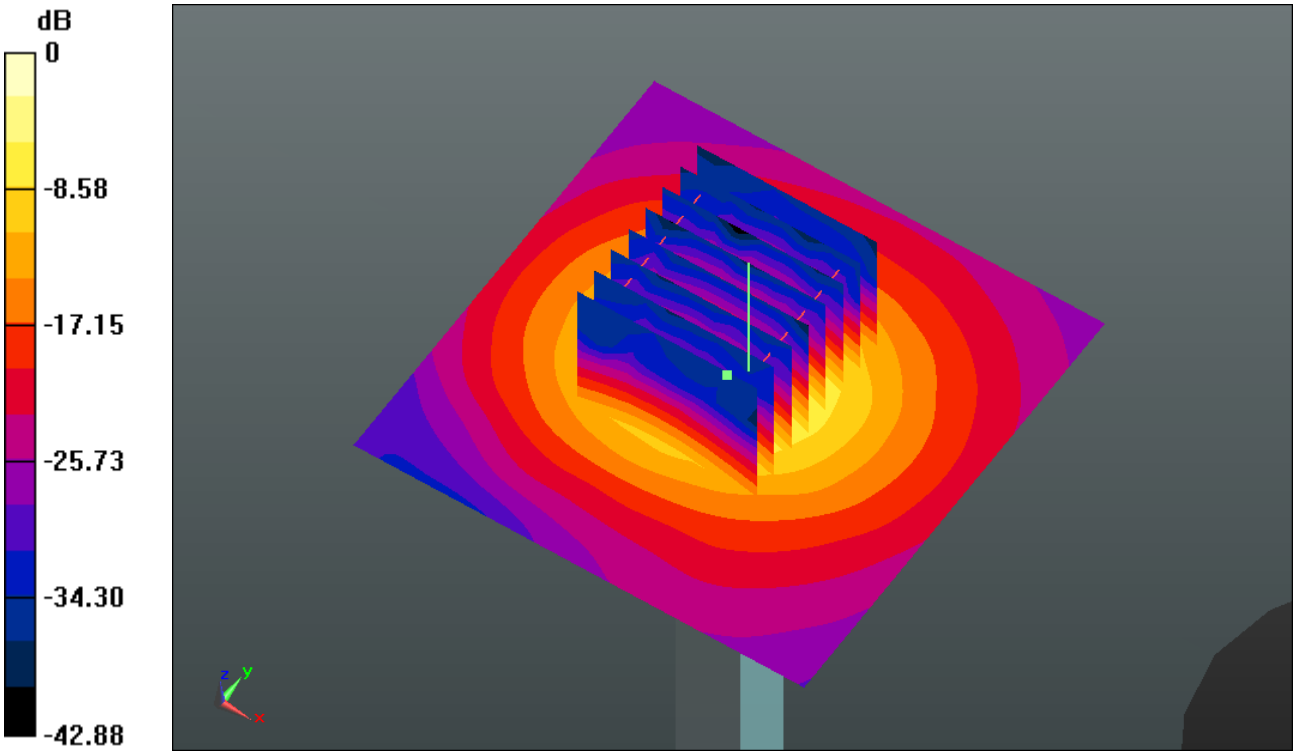

0 dB = 17.320mW/g

Test Laboratory: Sporton International Inc. SAR/HAC Testing Lab Date: 2014.06.13

System Check_Body_5300MHz_140613

DUT: D5GHzV2 - SN: 1006

Communication System: CW; Frequency: 5300 MHz;Duty Cycle: 1:1
Medium: MSL_5000_140613 Medium parameters used: f = 5300 MHz; σ = 5.301 mho/m; ε_r = 48.29; ρ = 1000 kg/m^3
Ambient Temperature：23.5 ℃； Liquid Temperature：22.6 ℃

DASY5 Configuration:
- Probe: EX3DV4 - SN3753; ConvF(4.42, 4.42, 4.42); Calibrated: 2014.03.26
- Sensor-Surface: 1.4mm (Mechanical Surface Detection)
- Electronics: DAE4 Sn1358; Calibrated: 2014.04.30
- Phantom: SAM1; Type: SAM; Serial: TP-1479
- Measurement SW: DASY52, Version 52.8 (7); SEMCAD X Version 14.4.5 (3634)

Pin=100mW/Area Scan (71x71x1): Measurement grid: dx=10mm, dy=10mm
Maximum value of SAR (interpolated) = 17.427 mW/g

Pin=100mW/Zoom Scan (8x8x7)/Cube 0: Measurement grid: dx=4mm, dy=4mm, dz=1.4mm
Reference Value = 40.508 V/m; Power Drift = -0.0031 dB
Peak SAR (extrapolated) = 31.977 W/kg
SAR(1 g) = 7.39 mW/g; SAR(10 g) = 2.05 mW/g
Maximum value of SAR (measured) = 17.483 mW/g

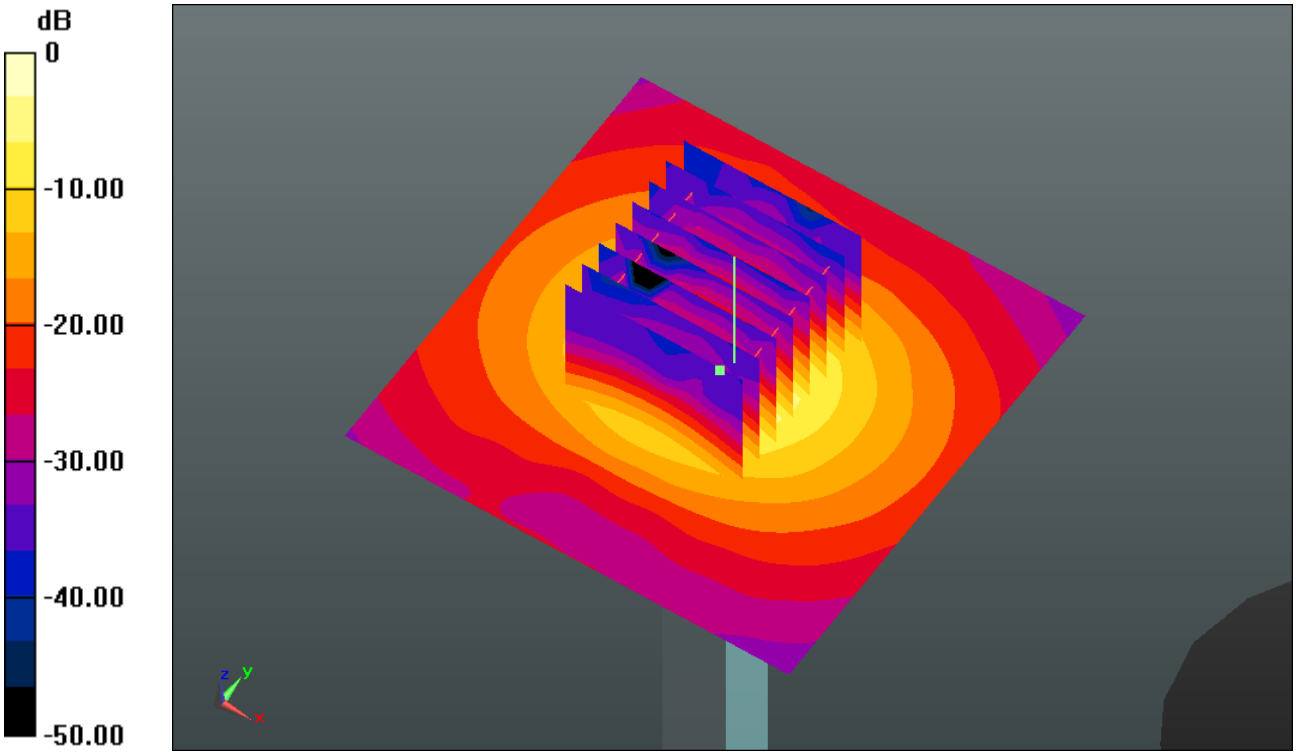

0 dB = 17.480mW/g

Test Laboratory: Sporton International Inc. SAR/HAC Testing Lab Date: 2014.06.14

System Check_Body_5600MHz_140614

DUT: D5GHzV2 - SN: 1006

Communication System: CW; Frequency: 5600 MHz;Duty Cycle: 1:1
Medium: MSL_5000_140614 Medium parameters used: f = 5600 MHz; σ = 5.716 mho/m; ε_r = 47.645; ρ = 1000 kg/m^3
Ambient Temperature：23.5 ℃; Liquid Temperature：22.5 ℃

DASY5 Configuration:
- Probe: EX3DV4 - SN3661; ConvF(4.21, 4.21, 4.21); Calibrated: 2014.03.10
- Sensor-Surface: 1.4mm (Mechanical Surface Detection)
- Electronics: DAE4 Sn1358; Calibrated: 2014.04.30
- Phantom: SAM2; Type: SAM; Serial: TP-1477
- Measurement SW: DASY52, Version 52.8 (7); SEMCAD X Version 14.4.5 (3634)

Pin=100mW/Area Scan (71x71x1): Measurement grid: dx=10mm, dy=10mm
Maximum value of SAR (interpolated) = 19.257 mW/g

Pin=100mW/Zoom Scan (8x8x7)/Cube 0: Measurement grid: dx=4mm, dy=4mm, dz=1.4mm
Reference Value = 38.538 V/m; Power Drift = 0.05 dB
Peak SAR (extrapolated) = 27.792 W/kg
SAR(1 g) = 7.76 mW/g; SAR(10 g) = 2.23 mW/g
Maximum value of SAR (measured) = 19.178 mW/g

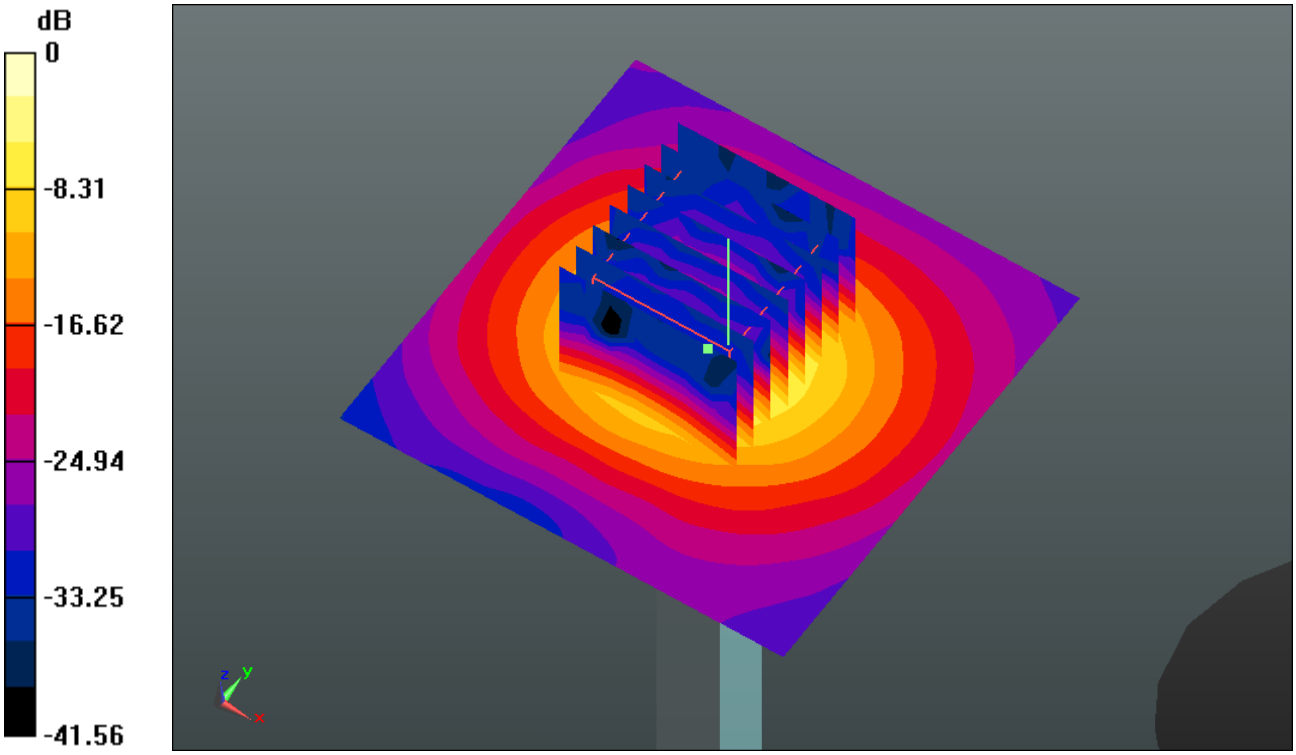

0 dB = 19.180mW/g

Test Laboratory: Sporton International Inc. SAR/HAC Testing Lab Date: 2014.06.13

System Check_Body_5800MHz_140613

DUT: D5GHzV2 - SN: 1006

Communication System: CW; Frequency: 5800 MHz;Duty Cycle: 1:1
Medium: MSL_5000_140613 Medium parameters used: f = 5800 MHz; σ = 5.976 mho/m; ε_r = 47.158; ρ = 1000 kg/m^3
Ambient Temperature：23.5 ℃； Liquid Temperature：22.6 ℃

DASY5 Configuration:
- Probe: EX3DV4 - SN3753; ConvF(4.24, 4.24, 4.24); Calibrated: 2014.03.26
- Sensor-Surface: 1.4mm (Mechanical Surface Detection)
- Electronics: DAE4 Sn1358; Calibrated: 2014.04.30
- Phantom: SAM2; Type: SAM; Serial: TP-1477
- Measurement SW: DASY52, Version 52.8 (7); SEMCAD X Version 14.4.5 (3634)

Pin=100mW/Area Scan (71x71x1): Measurement grid: dx=10mm, dy=10mm
Maximum value of SAR (interpolated) = 18.653 mW/g

Pin=100mW/Zoom Scan (8x8x7)/Cube 0: Measurement grid: dx=4mm, dy=4mm, dz=1.4mm
Reference Value = 35.834 V/m; Power Drift = -0.03 dB
Peak SAR (extrapolated) = 36.550 W/kg
SAR(1 g) = 7.32 mW/g; SAR(10 g) = 2.02 mW/g
Maximum value of SAR (measured) = 18.335 mW/g

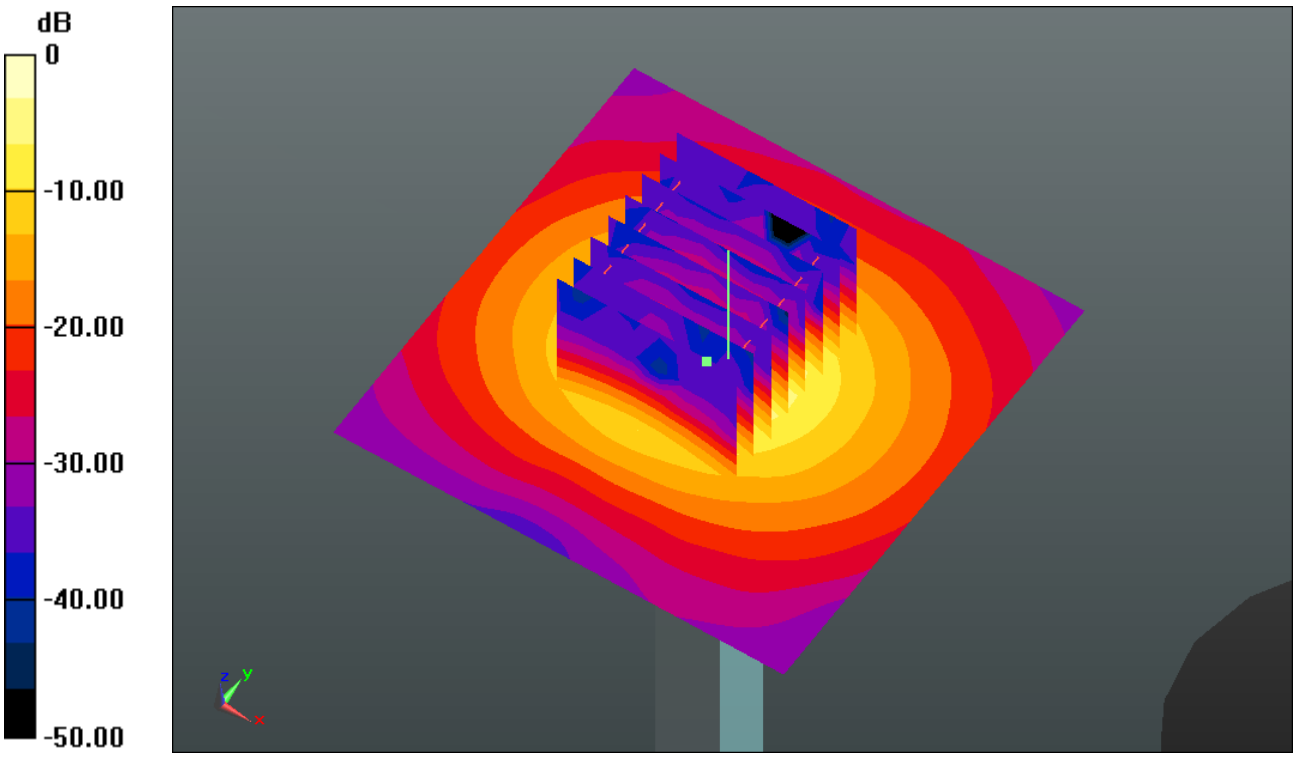

0 dB = 18.340mW/g

Appendix B. Plots of High SAR Measurement

The plots are shown as follows.

Test Laboratory: Sporton International Inc. SAR/HAC Testing Lab Date: 2014/6/4

#01 GSM850_GPRS (GMSK 3 Tx slots)_Left Cheek_Ch189_Sample#1

Communication System: GPRS (GMSK 3 Tx slot); Frequency: 836.4 MHz;Duty Cycle: 1:2.77
Medium: HSL_835_140604 Medium parameters used: f = 836.4 MHz; σ = 0.903 S/m; ε_r = 40.74; ρ = 1000 kg/m^3
Ambient Temperature：23.5 ℃; Liquid Temperature ：22.7 ℃

DASY5 Configuration:
- Probe: EX3DV4 - SN3898; ConvF(9.85, 9.85, 9.85); Calibrated: 2014/3/10;
- Sensor-Surface: 2mm (Mechanical Surface Detection)
- Electronics: DAE4 Sn1353; Calibrated: 2014/1/30
- Phantom: SAM1; Type: QD000P40CD; Serial: TP:1753
- Measurement SW: DASY52, Version 52.8 (5); SEMCAD X Version 14.6.8 (7028)

Ch189/Area Scan (61x111x1): Interpolated grid: dx=15mm, dy=15mm
Maximum value of SAR (interpolated) = 0.556 W/kg

Ch189/Zoom Scan (5x5x7)/Cube 0: Measurement grid: dx=8mm, dy=8mm, dz=5mm
Reference Value = 13.991 V/m; Power Drift = -0.01 dB
Peak SAR (extrapolated) = 0.810 W/kg
SAR(1 g) = 0.543 W/kg; SAR(10 g) = 0.381 W/kg
Maximum value of SAR (measured) = 0.561 W/kg

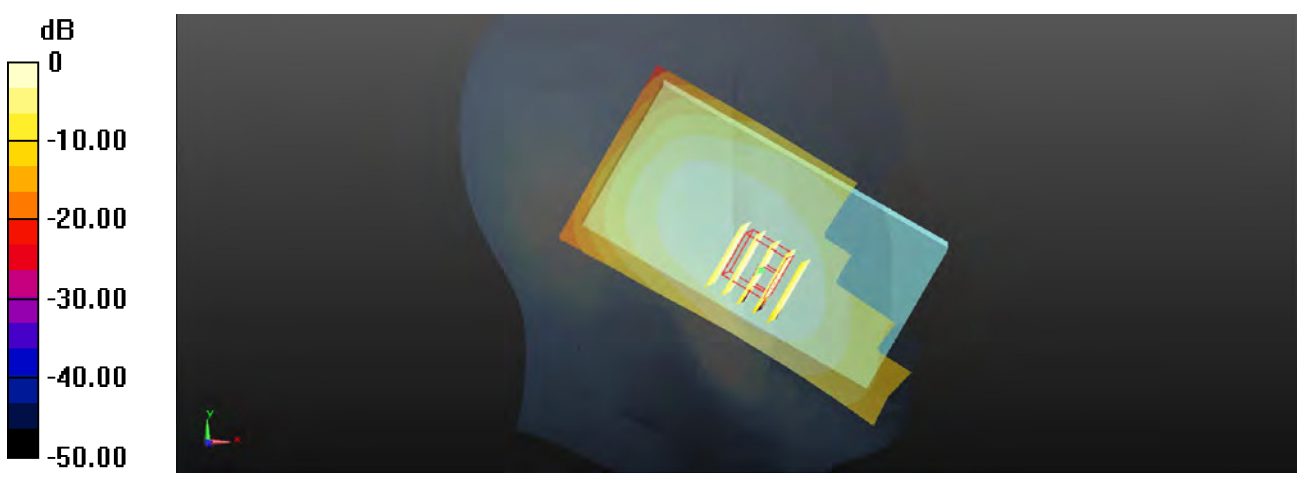

0 dB = 0.561 W/kg

Test Laboratory: Sporton International Inc. SAR/HAC Testing Lab Date: 2014/6/4

#02 GSM1900_GPRS (GMSK 3 Tx slots)_Right Cheek_Ch512_Sample#1

Communication System: GPRS (GMSK 3 Tx slot); Frequency: 1850.2 MHz;Duty Cycle: 1:2.77
Medium: HSL_1900_140604 Medium parameters used: f = 1850.2 MHz; σ = 1.351 S/m; ε_r = 39.39; ρ = 1000 kg/m^3
Ambient Temperature：23.5 ℃; Liquid Temperature ：22.5 ℃

DASY5 Configuration:
- Probe: EX3DV4 - SN3898; ConvF(8.2, 8.2, 8.2); Calibrated: 2014/3/10;
- Sensor-Surface: 2mm (Mechanical Surface Detection)
- Electronics: DAE4 Sn1353; Calibrated: 2014/1/30
- Phantom: SAM2; Type: QD000P40CD; Serial: TP:1754
- Measurement SW: DASY52, Version 52.8 (5); SEMCAD X Version 14.6.8 (7028)

Ch512/Area Scan (61x111x1): Interpolated grid: dx=15mm, dy=15mm
Maximum value of SAR (interpolated) = 0.692 W/kg

Ch512/Zoom Scan (5x5x7)/Cube 0: Measurement grid: dx=8mm, dy=8mm, dz=5mm
Reference Value = 11.016 V/m; Power Drift = -0.05 dB
Peak SAR (extrapolated) = 0.842 W/kg
SAR(1 g) = 0.575 W/kg; SAR(10 g) = 0.358 W/kg
Maximum value of SAR (measured) = 0.725 W/kg

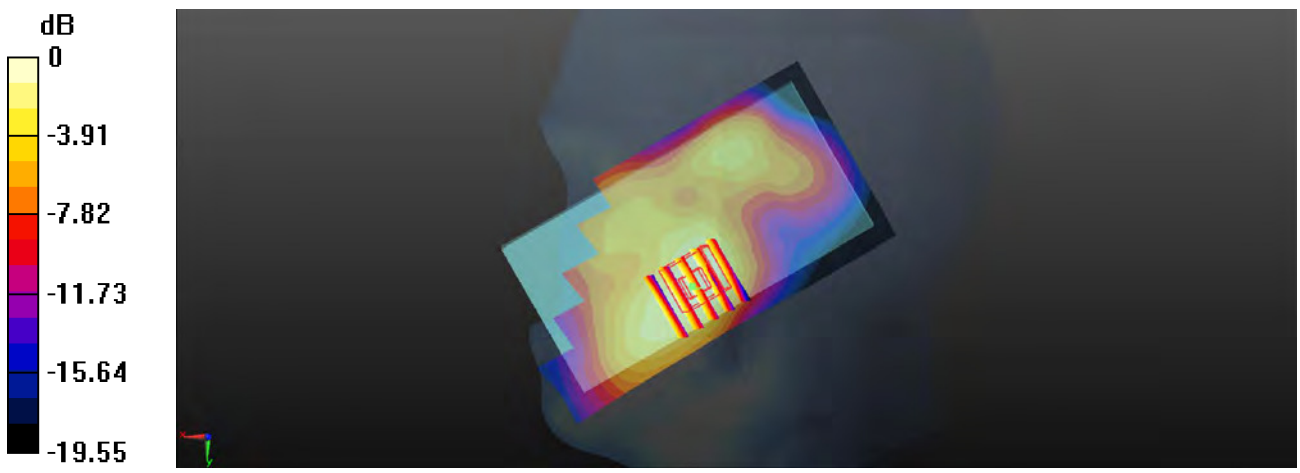

0 dB = 0.725 W/kg

Test Laboratory: Sporton International Inc. SAR/HAC Testing Lab Date: 2014/6/4

#03 WCDMA Band V_RMC 12.2K_Left Cheek_Ch4132_Sample#2

Communication System: WCDMA ; Frequency: 826.4 MHz;Duty Cycle: 1:1
Medium: HSL_835_140604 Medium parameters used: f = 826.4 MHz; σ = 0.894 S/m; ε_r = 40.831; ρ = 1000 kg/m^3
Ambient Temperature：23.5 ℃; Liquid Temperature ：22.7 ℃

DASY5 Configuration:
- Probe: EX3DV4 - SN3898; ConvF(9.85, 9.85, 9.85); Calibrated: 2014/3/10;
- Sensor-Surface: 2mm (Mechanical Surface Detection)
- Electronics: DAE4 Sn1353; Calibrated: 2014/1/30
- Phantom: SAM1; Type: QD000P40CD; Serial: TP:1753
- Measurement SW: DASY52, Version 52.8 (5); SEMCAD X Version 14.6.8 (7028)

Ch4132/Area Scan (61x111x1): Interpolated grid: dx=15mm, dy=15mm
Maximum value of SAR (interpolated) = 0.324 W/kg

Ch4132/Zoom Scan (5x5x7)/Cube 0: Measurement grid: dx=8mm, dy=8mm, dz=5mm
Reference Value = 8.492 V/m; Power Drift = 0.04 dB
Peak SAR (extrapolated) = 0.355 W/kg
SAR(1 g) = 0.280 W/kg; SAR(10 g) = 0.209 W/kg
Maximum value of SAR (measured) = 0.322 W/kg

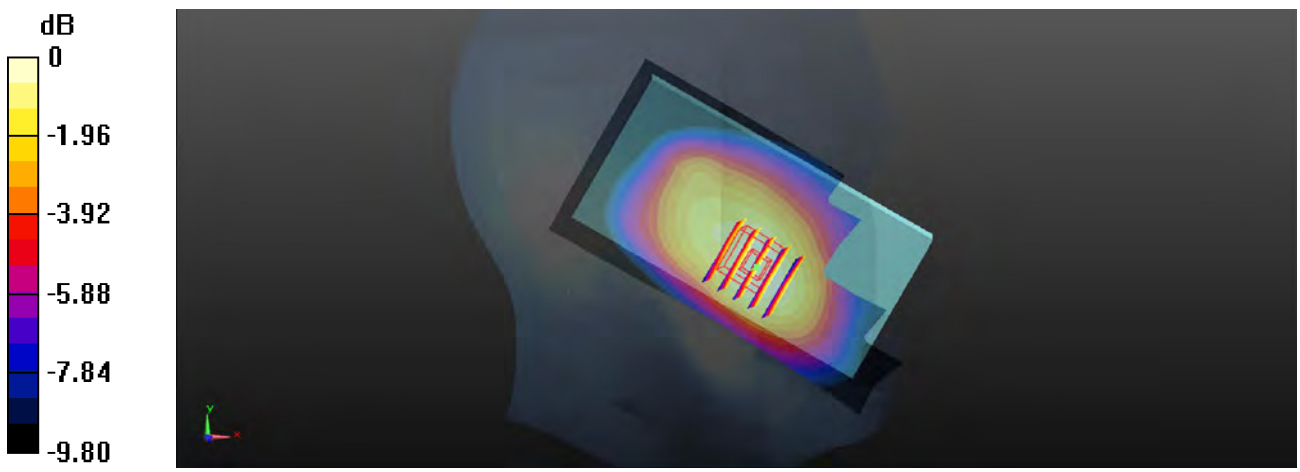

0 dB = 0.322 W/kg

Test Laboratory: Sporton International Inc. SAR/HAC Testing Lab Date: 2014/6/11

#04 WCDMA Band IV_RMC 12.2K_Right Cheek_Ch1513_Sample#2

Communication System: WCDMA ; Frequency: 1752.6 MHz;Duty Cycle: 1:1
Medium: HSL_1750_140611 Medium parameters used: f = 1752.6 MHz; σ = 1.382 S/m; ε_r = 41.323; ρ = 1000 kg/m^3
Ambient Temperature：23.5 ℃; Liquid Temperature ：22.5 ℃

DASY5 Configuration:
- Probe: EX3DV4 - SN3898; ConvF(8.38, 8.38, 8.38); Calibrated: 2014/3/10;
- Sensor-Surface: 2mm (Mechanical Surface Detection)
- Electronics: DAE4 Sn1353; Calibrated: 2014/1/30
- Phantom: SAM1; Type: QD000P40CD; Serial: TP:1753
- Measurement SW: DASY52, Version 52.8 (5); SEMCAD X Version 14.6.8 (7028)

Ch1513/Area Scan (61x111x1): Interpolated grid: dx=15mm, dy=15mm
Maximum value of SAR (interpolated) = 0.762 W/kg

Ch1513/Zoom Scan (5x5x7)/Cube 0: Measurement grid: dx=8mm, dy=8mm, dz=5mm
Reference Value = 10.466 V/m; Power Drift = 0.02 dB
Peak SAR (extrapolated) = 0.886 W/kg
SAR(1 g) = 0.582 W/kg; SAR(10 g) = 0.367 W/kg
Maximum value of SAR (measured) = 0.741 W/kg

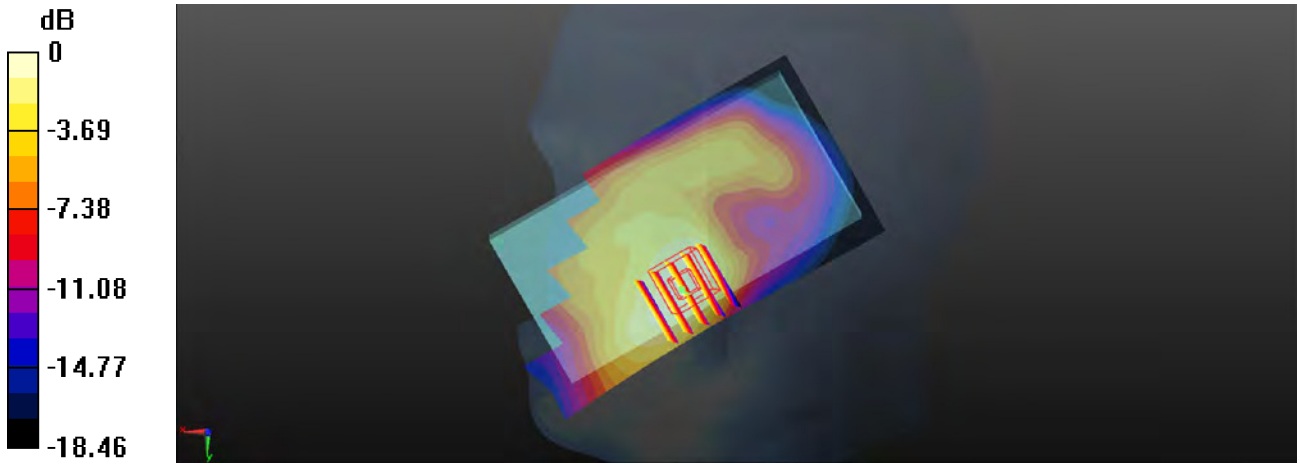

0 dB = 0.741 W/kg

Test Laboratory: Sporton International Inc. SAR/HAC Testing Lab Date: 2014/6/

#05 WCDMA Band II_RMC 12.2K_Right Cheek_Ch9538_Sample#1

Communication System: WCDMA ; Frequency: 1907.6 MHz;Duty Cycle: 1:1
Medium: HSL_1900_140604 Medium parameters used: f = 1907.6 MHz; σ = 1.42 S/m; ε_r = 39.311; ρ = 1000 kg/m^3
Ambient Temperature：23.5 ℃; Liquid Temperature ：22.5 ℃

DASY5 Configuration:
- Probe: EX3DV4 - SN3898; ConvF(8.2, 8.2, 8.2); Calibrated: 2014/3/10;
- Sensor-Surface: 2mm (Mechanical Surface Detection)
- Electronics: DAE4 Sn1353; Calibrated: 2014/1/30
- Phantom: SAM2; Type: QD000P40CD; Serial: TP:1754
- Measurement SW: DASY52, Version 52.8 (5); SEMCAD X Version 14.6.8 (7028)

Ch9538/Area Scan (61x111x1): Interpolated grid: dx=15mm, dy=15mm
Maximum value of SAR (interpolated) = 0.520 W/kg

Ch9538/Zoom Scan (5x5x7)/Cube 0: Measurement grid: dx=8mm, dy=8mm, dz=5mm
Reference Value = 9.238 V/m; Power Drift = -0.03 dB
Peak SAR (extrapolated) = 0.631 W/kg
SAR(1 g) = 0.424 W/kg; SAR(10 g) = 0.262 W/kg
Maximum value of SAR (measured) = 0.537 W/kg

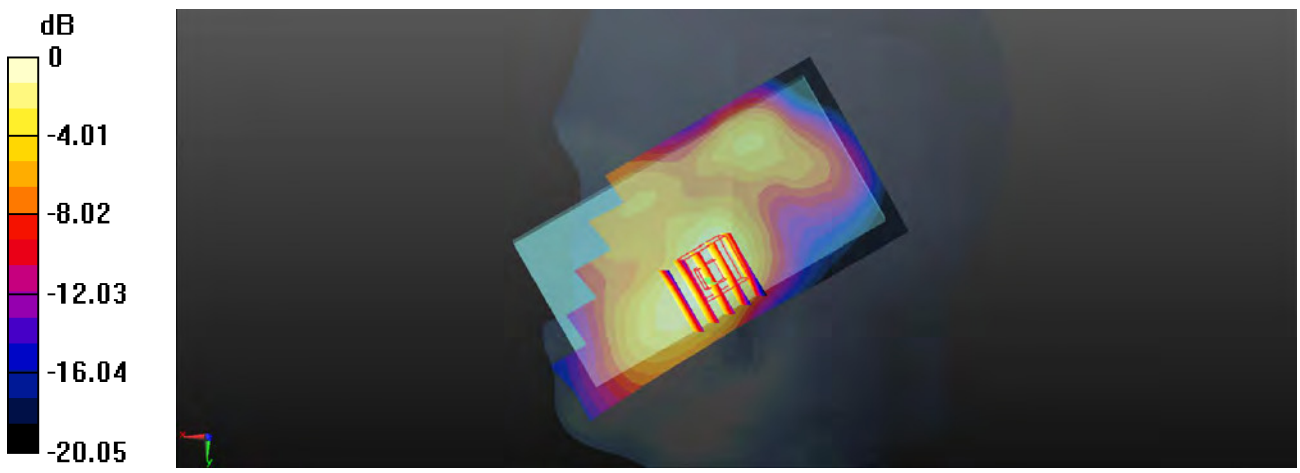

0 dB = 0.537 W/kg

Test Laboratory: Sporton International Inc. SAR/HAC Testing Lab Date: 2014.06.03

#06_WLAN 2.4GHz_802.11b_1Mbps_Left Cheek_Ch6_Sample#1

Communication System: WIFI (0); Frequency: 2437 MHz;Duty Cycle: 1:1.024
Medium: HSL_2450_140603 Medium parameters used: f = 2437 MHz; σ = 1.804 mho/m; ε_r = 39.275; ρ = 1000 kg/m^3
Ambient Temperature：23.4 ℃; Liquid Temperature：22.6 ℃

DASY5 Configuration:
- Probe: EX3DV4 - SN3911; ConvF(7.04, 7.04, 7.04); Calibrated: 2014.04.22
- Sensor-Surface: 2mm (Mechanical Surface Detection)
- Electronics: DAE4 Sn1358; Calibrated: 2014.04.30
- Phantom: SAM1; Type: SAM; Serial: TP-1479
- Measurement SW: DASY52, Version 52.8 (7); SEMCAD X Version 14.4.5 (3634)

Ch6/Area Scan (91x151x1): Measurement grid: dx=12mm, dy=12mm
Maximum value of SAR (interpolated) = 0.048 mW/g

Ch6/Zoom Scan (7x7x7)/Cube 0: Measurement grid: dx=5mm, dy=5mm, dz=5mm
Reference Value = 2.384 V/m; Power Drift = -0.12 dB
Peak SAR (extrapolated) = 0.063 W/kg
SAR(1 g) = 0.035 mW/g; SAR(10 g) = 0.021 mW/g
Maximum value of SAR (measured) = 0.046 mW/g

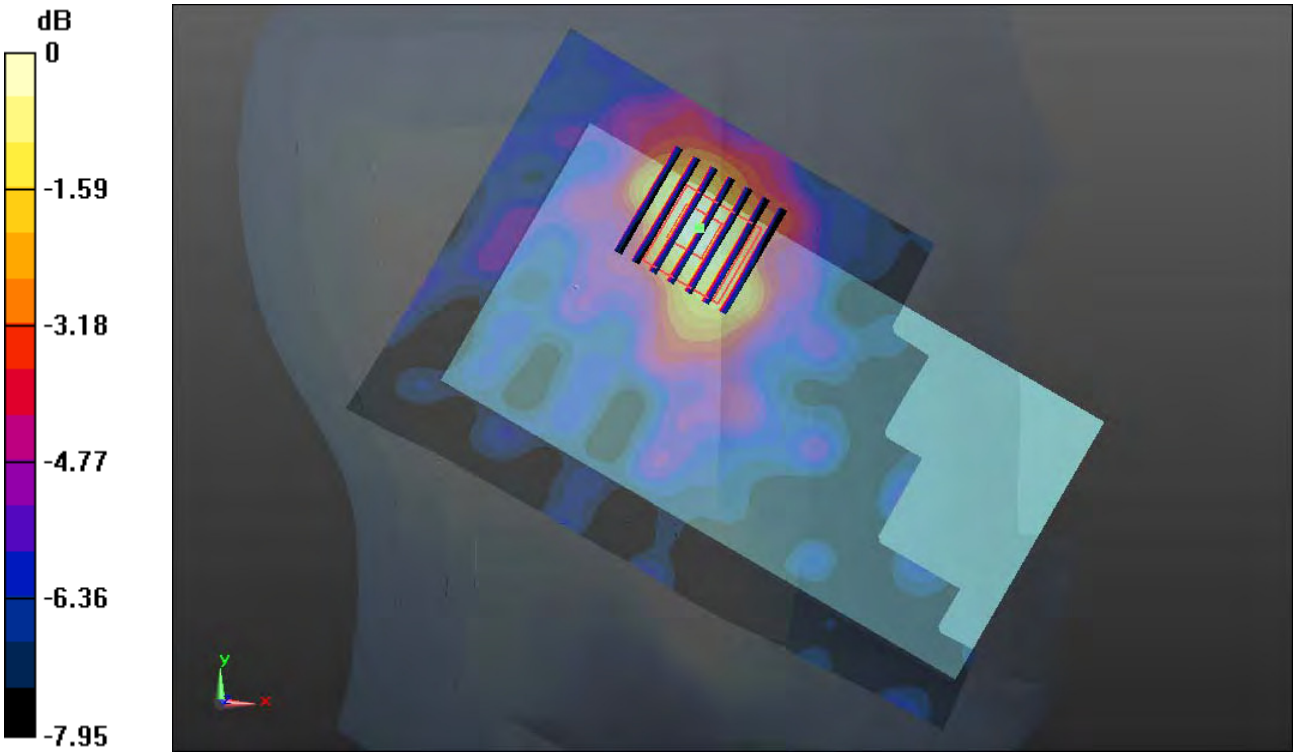

0 dB = 0.050mW/g

Test Laboratory: Sporton International Inc. SAR/HAC Testing Lab Date: 2014.06.05

#07_WLAN 5.8GHz_802.11a_6Mbps_Left Cheek_Ch161_Sample#1

Communication System: WIFI (0); Frequency: 5805 MHz;Duty Cycle: 1:1.146
Medium: HSL_5000_140605 Medium parameters used: f = 5805 MHz; σ = 5.411 mho/m; ε_r = 34.34; ρ = 1000 kg/m^3
Ambient Temperature：23.2 ℃； Liquid Temperature：22.9 ℃

DASY5 Configuration:
- Probe: EX3DV4 - SN3753; ConvF(4.58, 4.58, 4.58); Calibrated: 2014.03.26
- Sensor-Surface: 1.4mm (Mechanical Surface Detection)
- Electronics: DAE4 Sn1358; Calibrated: 2014.04.30
- Phantom: SAM2; Type: SAM; Serial: TP-1477
- Measurement SW: DASY52, Version 52.8 (7); SEMCAD X Version 14.4.5 (3634)

Ch161/Area Scan (121x181x1): Measurement grid: dx=10mm, dy=10mm
Maximum value of SAR (interpolated) = 0.333 mW/g

Ch161/Zoom Scan (8x8x7)/Cube 0: Measurement grid: dx=4mm, dy=4mm, dz=1.4mm
Reference Value = 0.537 V/m; Power Drift = 0.14 dB
Peak SAR (extrapolated) = 0.698 W/kg
SAR(1 g) = 0.178 mW/g; SAR(10 g) = 0.064 mW/g
Maximum value of SAR (measured) = 0.441 mW/g

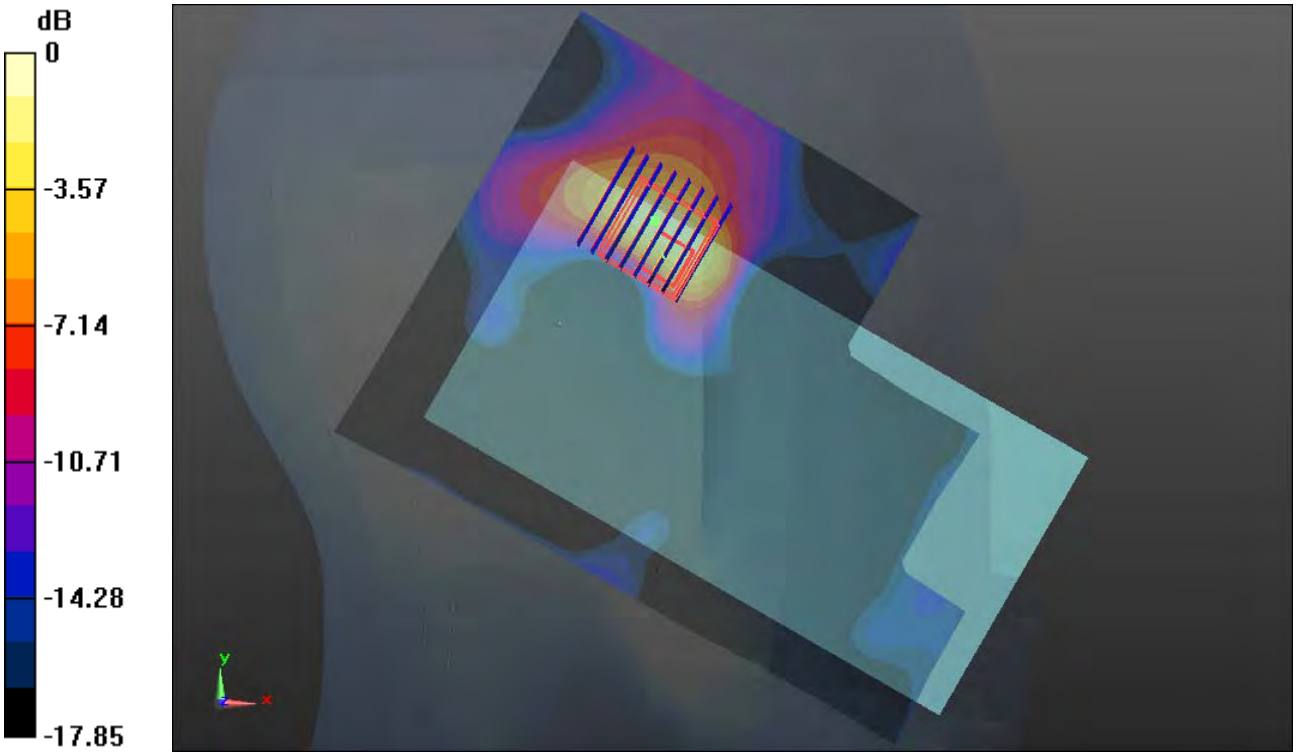

0 dB = 0.440mW/g

Test Laboratory: Sporton International Inc. SAR/HAC Testing Lab Date: 2014.06.05

#08_WLAN 5.2GHz_802.11a_6Mbps_Left Cheek_Ch48_Sample#1

Communication System: WIFI (0); Frequency: 5240 MHz;Duty Cycle: 1:1.146
Medium: HSL_5000_140605 Medium parameters used: f = 5240 MHz; σ = 4.852 mho/m; ε_r = 35.418; ρ = 1000 kg/m^3
Ambient Temperature：23.2 ℃; Liquid Temperature：22.9 ℃

DASY5 Configuration:
- Probe: EX3DV4 - SN3753; ConvF(4.83, 4.83, 4.83); Calibrated: 2014.03.26
- Sensor-Surface: 1.4mm (Mechanical Surface Detection)
- Electronics: DAE4 Sn1358; Calibrated: 2014.04.30
- Phantom: SAM2; Type: SAM; Serial: TP-1477
- Measurement SW: DASY52, Version 52.8 (7); SEMCAD X Version 14.4.5 (3634)

Ch48/Area Scan (111x181x1): Measurement grid: dx=10mm, dy=10mm
Maximum value of SAR (interpolated) = 0.407 mW/g

Ch48/Zoom Scan (8x8x7)/Cube 0: Measurement grid: dx=4mm, dy=4mm, dz=1.4mm
Reference Value = 0.919 V/m; Power Drift = 0.10 dB
Peak SAR (extrapolated) = 0.778 W/kg
SAR(1 g) = 0.213 mW/g; SAR(10 g) = 0.071 mW/g
Maximum value of SAR (measured) = 0.497 mW/g

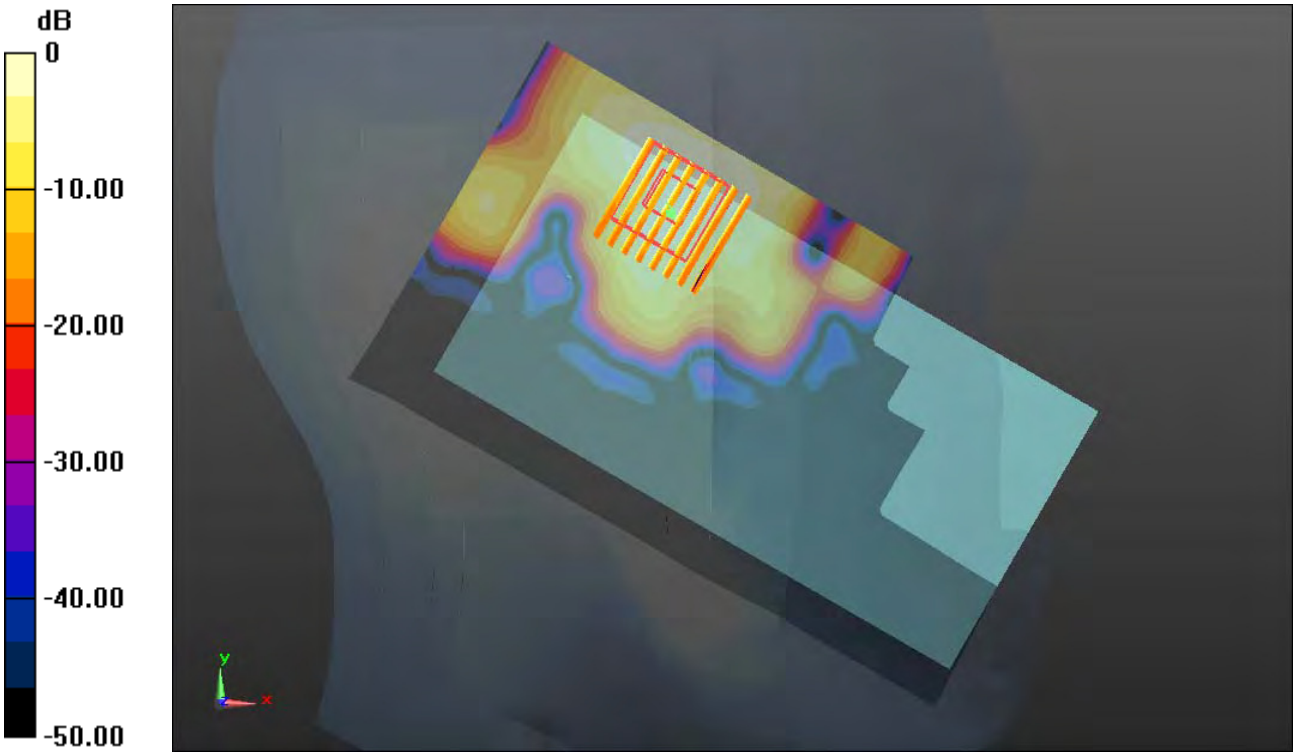

0 dB = 0.500mW/g

Test Laboratory: Sporton International Inc. SAR/HAC Testing Lab Date: 2014.06.05

#09_WLAN 5.3GHz_802.11a_6Mbps_Left Cheek_Ch64_Sample#1

Communication System: WIFI (0); Frequency: 5320 MHz;Duty Cycle: 1:1.146
Medium: HSL_5000_140605 Medium parameters used: f = 5320 MHz; σ = 4.928 mho/m; ε_r = 35.274; ρ = 1000 kg/m^3
Ambient Temperature：23.2 ℃; Liquid Temperature：22.9 ℃

DASY5 Configuration:
- Probe: EX3DV4 - SN3753; ConvF(4.92, 4.92, 4.92); Calibrated: 2014.03.26
- Sensor-Surface: 1.4mm (Mechanical Surface Detection)
- Electronics: DAE4 Sn1358; Calibrated: 2014.04.30
- Phantom: SAM2; Type: SAM; Serial: TP-1477
- Measurement SW: DASY52, Version 52.8 (7); SEMCAD X Version 14.4.5 (3634)

Ch64/Area Scan (121x181x1): Measurement grid: dx=10mm, dy=10mm
Maximum value of SAR (interpolated) = 0.298 mW/g

Ch64/Zoom Scan (8x8x7)/Cube 0: Measurement grid: dx=4mm, dy=4mm, dz=1.4mm
Reference Value = 2.086 V/m; Power Drift = 0.02 dB
Peak SAR (extrapolated) = 0.545 W/kg
SAR(1 g) = 0.149 mW/g; SAR(10 g) = 0.059 mW/g
Maximum value of SAR (measured) = 0.355 mW/g

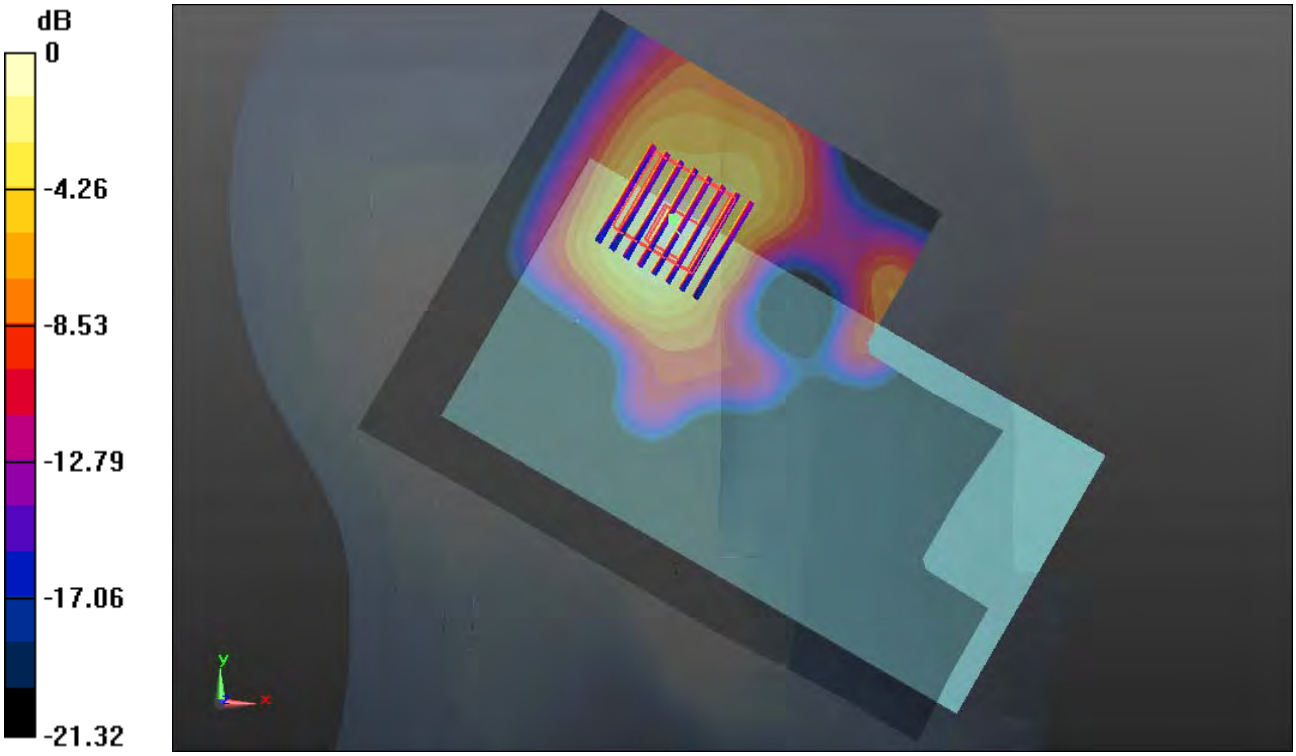

0 dB = 0.350mW/g

#10_WLAN 5.5GHz_802.11a_6Mbps_Left Cheek_Ch116_Sample#1

Communication System: WIFI (0); Frequency: 5580 MHz;Duty Cycle: 1:1.146
Medium: HSL_5000_140618 Medium parameters used: f = 5580 MHz; σ = 5.196 mho/m; ε_r = 34.779; ρ = 1000 kg/m^3
Ambient Temperature：23.2 ℃； Liquid Temperature：22.7 ℃

DASY5 Configuration:
- Probe: EX3DV4 - SN3857; ConvF(4.56, 4.56, 4.56); Calibrated: 2014.05.23
- Sensor-Surface: 1.4mm (Mechanical Surface Detection)
- Electronics: DAE4 Sn1210; Calibrated: 2014.05.19
- Phantom: SAM2; Type: SAM; Serial: TP-1477
- Measurement SW: DASY52, Version 52.8 (7); SEMCAD X Version 14.4.5 (3634)

Ch116/Area Scan (111x181x1): Measurement grid: dx=10mm, dy=10mm
Maximum value of SAR (interpolated) = 0.541 mW/g

Ch116/Zoom Scan (8x8x7)/Cube 0: Measurement grid: dx=4mm, dy=4mm, dz=1.4mm
Reference Value = 0 V/m; Power Drift = 0.05 dB
Peak SAR (extrapolated) = 0.661 W/kg
SAR(1 g) = 0.185 mW/g; SAR(10 g) = 0.060 mW/g
Maximum value of SAR (measured) = 0.452 mW/g

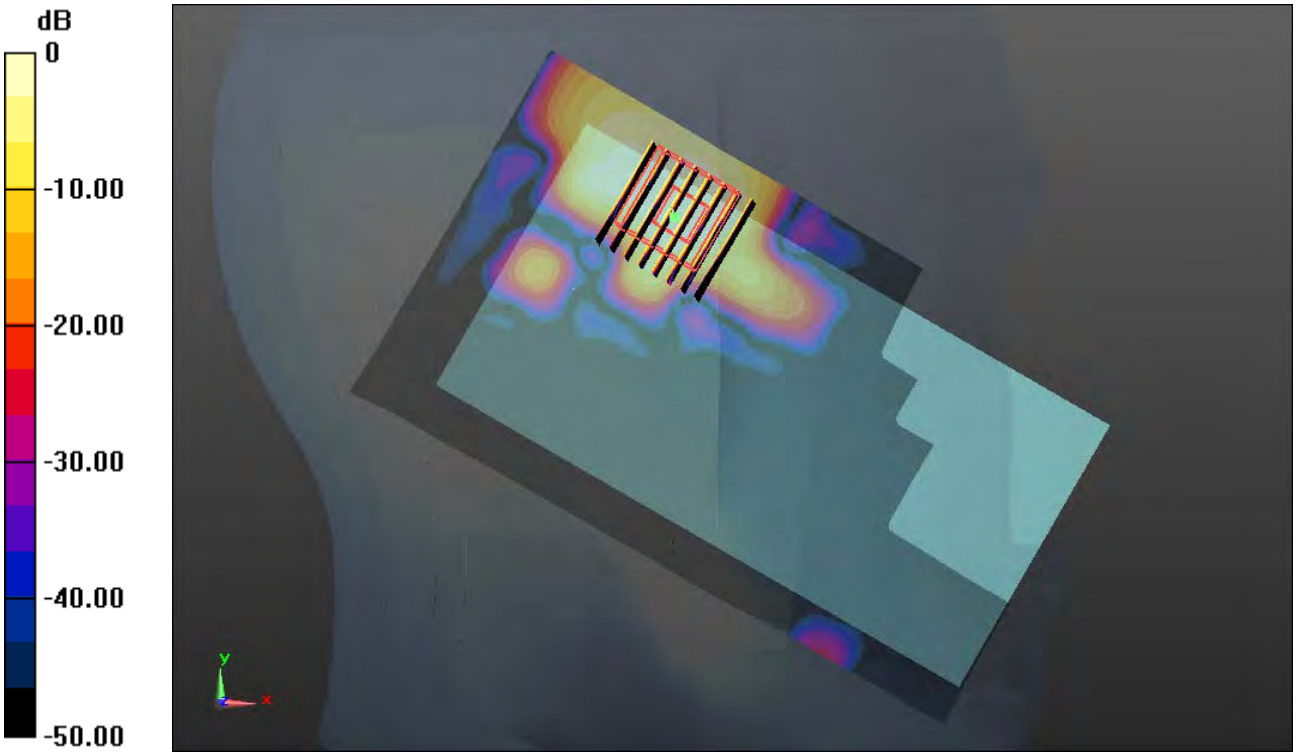

0 dB = 0.450mW/g

Test Laboratory: Sporton International Inc. SAR/HAC Testing Lab Date: 2014/6/3

#11 GSM850_GPRS (GMSK 3 Tx slots)_Back_1.0cm_Ch251_Sample#1

Communication System: GPRS (GMSK 3 Tx slot); Frequency: 848.8 MHz;Duty Cycle: 1:2.77
Medium: MSL_835_140603 Medium parameters used: f = 848.8 MHz; σ = 0.987 S/m; ε_r = 54.078; ρ = 1000 kg/m^3
Ambient Temperature：23.4 ℃; Liquid Temperature ：22.4 ℃

DASY5 Configuration:
- Probe: EX3DV4 - SN3898; ConvF(9.63, 9.63, 9.63); Calibrated: 2014/3/10;
- Sensor-Surface: 2mm (Mechanical Surface Detection)
- Electronics: DAE4 Sn1353; Calibrated: 2014/1/30
- Phantom: SAM1; Type: QD000P40CD; Serial: TP:1753
- Measurement SW: DASY52, Version 52.8 (5); SEMCAD X Version 14.6.8 (7028)

Ch251/Area Scan (61x111x1): Interpolated grid: dx=15mm, dy=15mm
Maximum value of SAR (interpolated) = 0.843 W/kg

Ch251/Zoom Scan (5x5x7)/Cube 0: Measurement grid: dx=8mm, dy=8mm, dz=5mm
Reference Value = 26.538 V/m; Power Drift = 0.04 dB
Peak SAR (extrapolated) = 0.880 W/kg
SAR(1 g) = 0.710 W/kg; SAR(10 g) = 0.527 W/kg
Maximum value of SAR (measured) = 0.816 W/kg

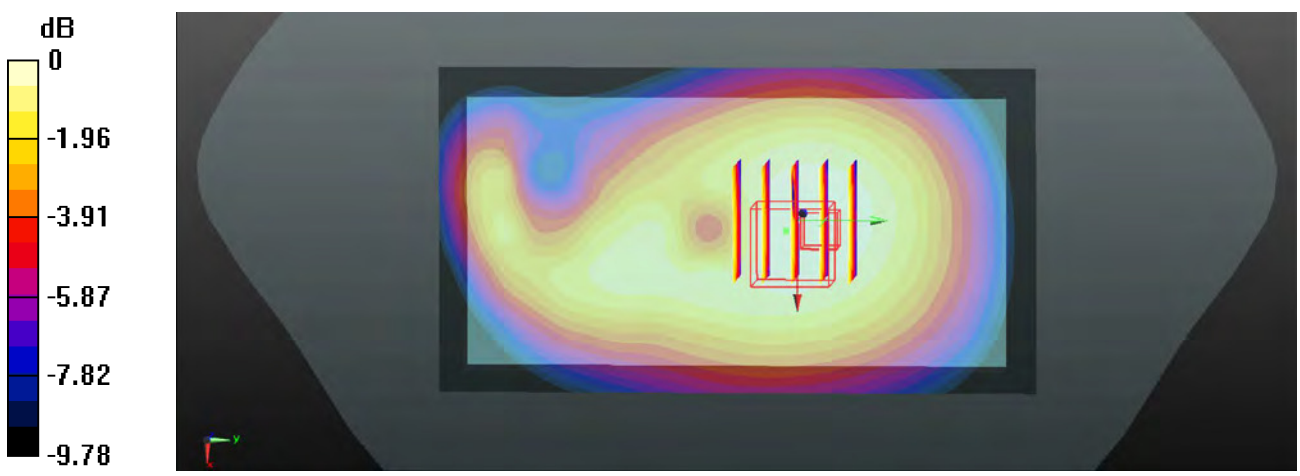

0 dB = 0.816 W/kg

Test Laboratory: Sporton International Inc. SAR/HAC Testing Lab Date: 2014/6/3

#12 GSM1900_GPRS (GMSK 3 Tx slots)_Back_1.0cm_Ch512_Sample#2

Communication System: GPRS (GMSK 3 Tx slot); Frequency: 1850.2 MHz;Duty Cycle: 1:2.77
Medium: MSL_1900_140603 Medium parameters used: f = 1850.2 MHz; σ = 1.483 S/m; ε_r = 55.412; ρ = 1000 kg/m^3
Ambient Temperature：23.5 ℃; Liquid Temperature ：22.6 ℃

DASY5 Configuration:
- Probe: EX3DV4 - SN3898; ConvF(7.83, 7.83, 7.83); Calibrated: 2014/3/10;
- Sensor-Surface: 2mm (Mechanical Surface Detection)
- Electronics: DAE4 Sn1353; Calibrated: 2014/1/30
- Phantom: SAM1; Type: QD000P40CD; Serial: TP:1753
- Measurement SW: DASY52, Version 52.8 (5); SEMCAD X Version 14.6.8 (7028)

Ch512/Area Scan (61x111x1): Interpolated grid: dx=15mm, dy=15mm
Maximum value of SAR (interpolated) = 1.46 W/kg

Ch512/Zoom Scan (5x5x7)/Cube 0: Measurement grid: dx=8mm, dy=8mm, dz=5mm
Reference Value = 8.882 V/m; Power Drift = 0.05 dB
Peak SAR (extrapolated) = 1.80 W/kg
SAR(1 g) = 1.07 W/kg; SAR(10 g) = 0.614 W/kg
Maximum value of SAR (measured) = 1.46 W/kg

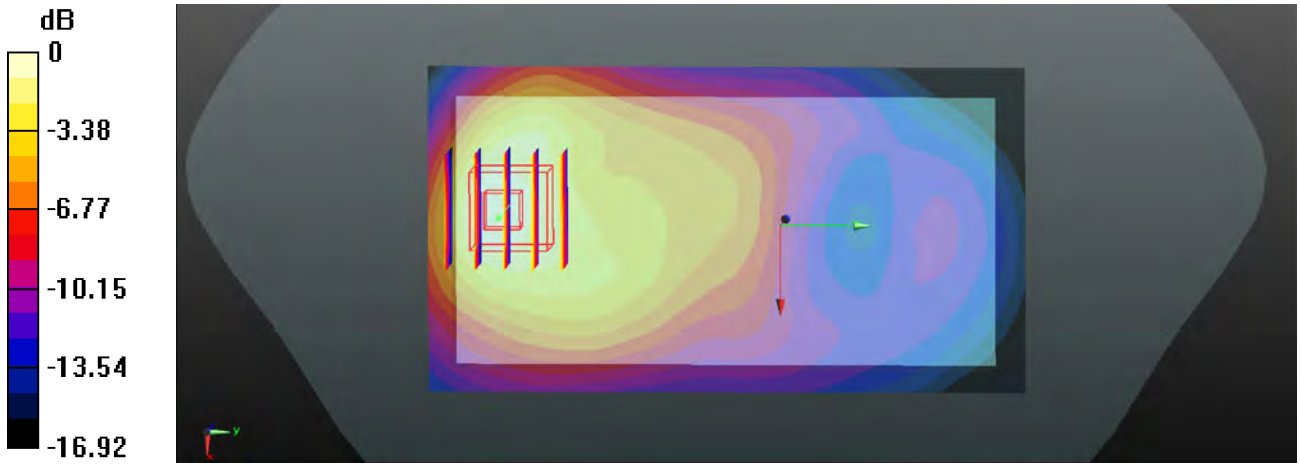

0 dB = 1.46 W/kg

Test Laboratory: Sporton International Inc. SAR/HAC Testing Lab Date: 2014/6/3

#13 WCDMA Band V_RMC 12.2K_Back_1.0cm_Ch4132_Sample#1

Communication System: WCDMA ; Frequency: 826.4 MHz;Duty Cycle: 1:1
Medium: MSL_835_140603 Medium parameters used: f = 826.4 MHz; σ = 0.966 S/m; ε_r = 54.27; ρ = 1000 kg/m^3
Ambient Temperature：23.4 ℃; Liquid Temperature ：22.4 ℃

DASY5 Configuration:
- Probe: EX3DV4 - SN3898; ConvF(9.63, 9.63, 9.63); Calibrated: 2014/3/10;
- Sensor-Surface: 2mm (Mechanical Surface Detection)
- Electronics: DAE4 Sn1353; Calibrated: 2014/1/30
- Phantom: SAM1; Type: QD000P40CD; Serial: TP:1753
- Measurement SW: DASY52, Version 52.8 (5); SEMCAD X Version 14.6.8 (7028)

Ch4132/Area Scan (61x111x1): Interpolated grid: dx=15mm, dy=15mm
Maximum value of SAR (interpolated) = 0.475 W/kg

Ch4132/Zoom Scan (5x5x7)/Cube 0: Measurement grid: dx=8mm, dy=8mm, dz=5mm
Reference Value = 20.901 V/m; Power Drift = 0.06 dB
Peak SAR (extrapolated) = 0.532 W/kg
SAR(1 g) = 0.420 W/kg; SAR(10 g) = 0.324 W/kg
Maximum value of SAR (measured) = 0.483 W/kg

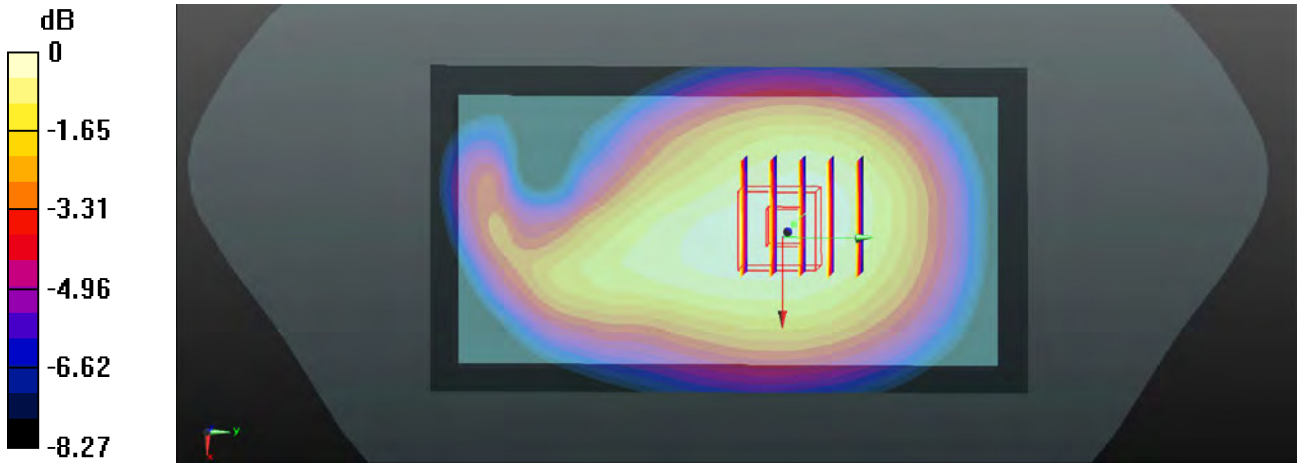

0 dB = 0.483 W/kg

Test Laboratory: Sporton International Inc. SAR/HAC Testing Lab Date: 2014/6/11

#14 WCDMA Band IV_RMC 12.2K_Back_1.0cm_Ch1312_Sample#1

Communication System: WCDMA ; Frequency: 1712.4 MHz;Duty Cycle: 1:1
Medium: MSL_1750_140611 Medium parameters used: f = 1712.4 MHz; σ = 1.48 S/m; ε_r = 54.495; ρ = 1000 kg/m^3
Ambient Temperature：23.5 ℃; Liquid Temperature ：22.5 ℃

DASY5 Configuration:
- Probe: EX3DV4 - SN3898; ConvF(8.16, 8.16, 8.16); Calibrated: 2014/3/10;
- Sensor-Surface: 2mm (Mechanical Surface Detection)
- Electronics: DAE4 Sn1353; Calibrated: 2014/1/30
- Phantom: SAM1; Type: QD000P40CD; Serial: TP:1753
- Measurement SW: DASY52, Version 52.8 (5); SEMCAD X Version 14.6.8 (7028)

Ch1312/Area Scan (61x111x1): Interpolated grid: dx=15mm, dy=15mm
Maximum value of SAR (interpolated) = 1.38 W/kg

Ch1312/Zoom Scan (5x5x7)/Cube 0: Measurement grid: dx=8mm, dy=8mm, dz=5mm
Reference Value = 11.857 V/m; Power Drift = -0.09 dB
Peak SAR (extrapolated) = 1.77 W/kg
SAR(1 g) = 1.08 W/kg; SAR(10 g) = 0.644 W/kg
Maximum value of SAR (measured) = 1.47 W/kg

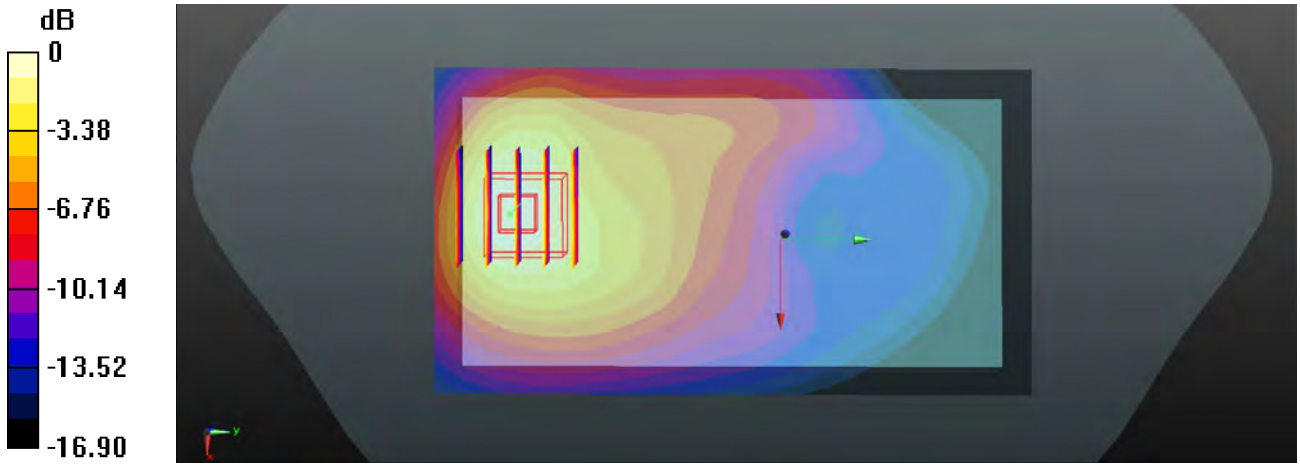

0 dB = 1.47 W/kg

Test Laboratory: Sporton International Inc. SAR/HAC Testing Lab Date: 2014/6/3

#15 WCDMA Band II_RMC 12.2K_Back_1.0cm_Ch9538_Sample#2

Communication System: WCDMA ; Frequency: 1907.6 MHz;Duty Cycle: 1:1
Medium: MSL_1900_140603 Medium parameters used: f = 1907.6 MHz; σ = 1.54 S/m; ε_r = 55.218; ρ = 1000 kg/m^3
Ambient Temperature：23.5 ℃; Liquid Temperature ：22.6 ℃

DASY5 Configuration:
- Probe: EX3DV4 - SN3898; ConvF(7.83, 7.83, 7.83); Calibrated: 2014/3/10;
- Sensor-Surface: 2mm (Mechanical Surface Detection)
- Electronics: DAE4 Sn1353; Calibrated: 2014/1/30
- Phantom: SAM1; Type: QD000P40CD; Serial: TP:1753
- Measurement SW: DASY52, Version 52.8 (5); SEMCAD X Version 14.6.8 (7028)

Ch9538/Area Scan (61x111x1): Interpolated grid: dx=15mm, dy=15mm
Maximum value of SAR (interpolated) = 1.10 W/kg

Ch9538/Zoom Scan (5x5x7)/Cube 0: Measurement grid: dx=8mm, dy=8mm, dz=5mm
Reference Value = 15.264 V/m; Power Drift = 0.03 dB
Peak SAR (extrapolated) = 1.39 W/kg
SAR(1 g) = 0.791 W/kg; SAR(10 g) = 0.438 W/kg
Maximum value of SAR (measured) = 1.10 W/kg

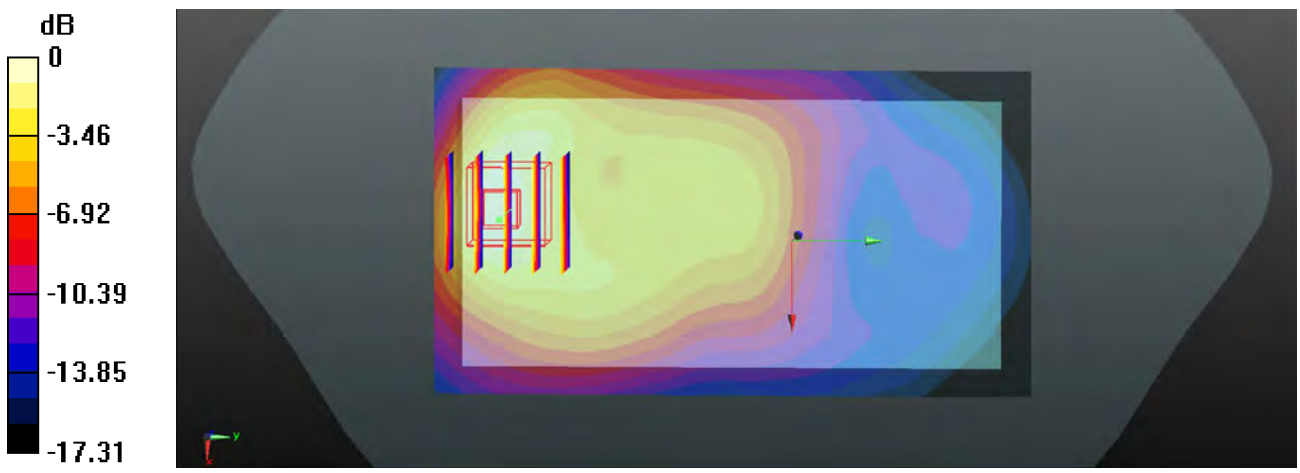

0 dB = 1.10 W/kg

Test Laboratory: Sporton International Inc. SAR/HAC Testing Lab Date: 2014.06.08

#16_WLAN 2.4GHz_802.11b_1Mbps_Back 1cm_Ch6_ Sample#1

Communication System: WIFI (0); Frequency: 2437 MHz;Duty Cycle: 1:1.024
Medium: MSL_2450_140608 Medium parameters used: f = 2437 MHz; σ = 1.917 mho/m; ε_r = 51.388; ρ = 1000 kg/m^3
Ambient Temperature：23.3 ℃; Liquid Temperature：22.7 ℃

DASY5 Configuration:
- Probe: EX3DV4 - SN3753; ConvF(7.31, 7.31, 7.31); Calibrated: 2014.03.26
- Sensor-Surface: 2mm (Mechanical Surface Detection)
- Electronics: DAE4 Sn1358; Calibrated: 2014.04.30
- Phantom: SAM1; Type: SAM; Serial: TP-1479
- Measurement SW: DASY52, Version 52.8 (7); SEMCAD X Version 14.4.5 (3634)

Ch6/Area Scan (91x151x1): Measurement grid: dx=12mm, dy=12mm
Maximum value of SAR (interpolated) = 0.00743 mW/g

Ch6/Zoom Scan (7x7x7)/Cube 0: Measurement grid: dx=5mm, dy=5mm, dz=5mm
Reference Value = 1.133 V/m; Power Drift = 0.05 dB
Peak SAR (extrapolated) = 0.00758 W/kg
SAR(1 g) = 0.00383 mW/g; SAR(10 g) = 0.00317 mW/g
Maximum value of SAR (measured) = 0.00476 mW/g

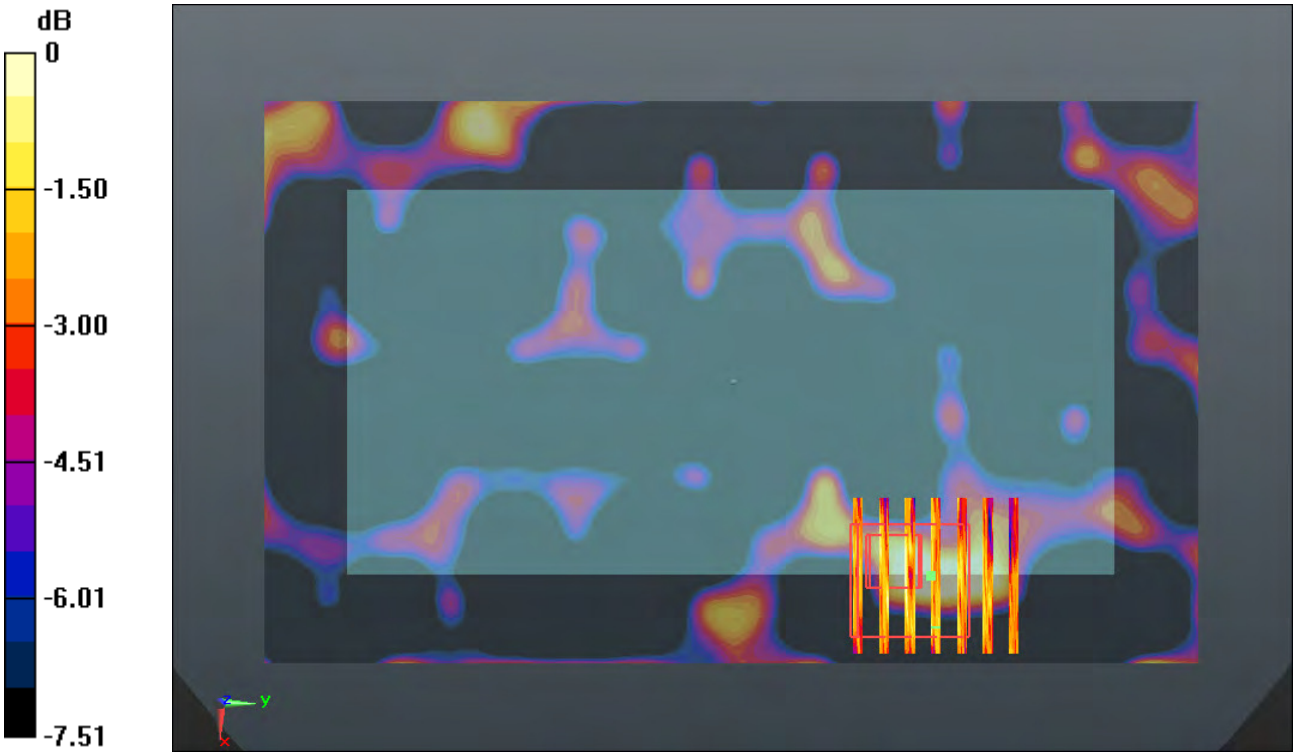

0 dB = 0.0048mW/g

Test Laboratory: Sporton International Inc. SAR/HAC Testing Lab Date: 2014.06.13

#17_WLAN 5.8GHz_802.11a_6Mbps_Right Side 1cm_Ch161_Sample#2

Communication System: WIFI (0); Frequency: 5805 MHz;Duty Cycle: 1:1.146
Medium: MSL_5000_140613 Medium parameters used: f = 5805 MHz; σ = 5.984 mho/m; ε_r = 47.138; ρ = 1000 kg/m^3
Ambient Temperature：23.5 ℃； Liquid Temperature：22.6 ℃

DASY5 Configuration:
- Probe: EX3DV4 - SN3753; ConvF(4.24, 4.24, 4.24); Calibrated: 2014.03.26
- Sensor-Surface: 1.4mm (Mechanical Surface Detection)
- Electronics: DAE4 Sn1358; Calibrated: 2014.04.30
- Phantom: SAM2; Type: SAM; Serial: TP-1477
- Measurement SW: DASY52, Version 52.8 (7); SEMCAD X Version 14.4.5 (3634)

Ch161/Area Scan (81x181x1): Measurement grid: dx=10mm, dy=10mm
Maximum value of SAR (interpolated) = 0.973 mW/g

Ch161/Zoom Scan (8x8x7)/Cube 0: Measurement grid: dx=4mm, dy=4mm, dz=1.4mm
Reference Value = 1.701 V/m; Power Drift = -0.02 dB
Peak SAR (extrapolated) = 1.556 W/kg
SAR(1 g) = 0.440 mW/g; SAR(10 g) = 0.165 mW/g
Maximum value of SAR (measured) = 0.977 mW/g

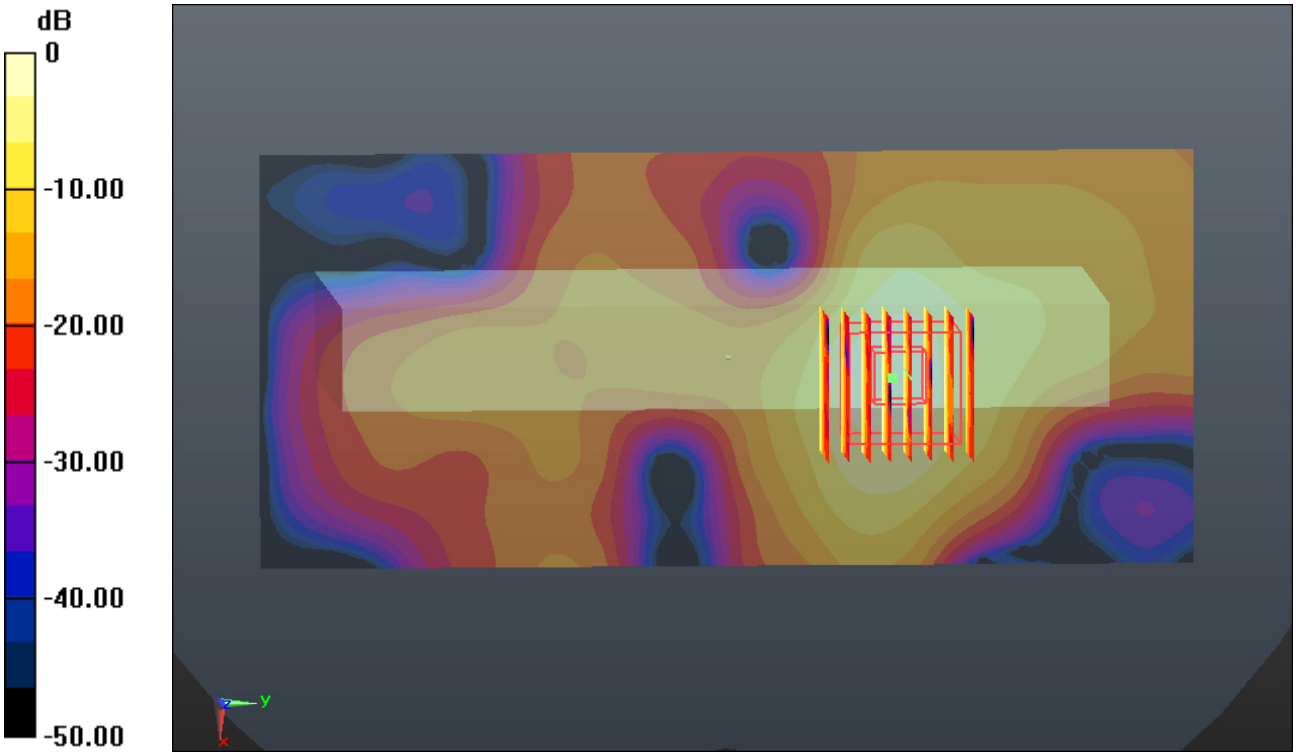

0 dB = 0.980mW/g

Test Laboratory: Sporton International Inc. SAR/HAC Testing Lab Date: 2014.06.13

#18_WLAN 5.8GHz_802.11a_6Mbps_Back 1cm_Ch161_Sample#2

Communication System: WIFI (0); Frequency: 5805 MHz;Duty Cycle: 1:1.146
Medium: MSL_5000_140613 Medium parameters used: f = 5805 MHz; σ = 5.984 mho/m; ε_r = 47.138; ρ = 1000 kg/m^3
Ambient Temperature：23.5 ℃； Liquid Temperature：22.6 ℃

DASY5 Configuration:
- Probe: EX3DV4 - SN3753; ConvF(4.24, 4.24, 4.24); Calibrated: 2014.03.26
- Sensor-Surface: 1.4mm (Mechanical Surface Detection)
- Electronics: DAE4 Sn1358; Calibrated: 2014.04.30
- Phantom: SAM2; Type: SAM; Serial: TP-1477
- Measurement SW: DASY52, Version 52.8 (7); SEMCAD X Version 14.4.5 (3634)

Ch161/Area Scan (141x181x1): Measurement grid: dx=10mm, dy=10mm
Maximum value of SAR (interpolated) = 0.486 mW/g

Ch161/Zoom Scan (8x8x7)/Cube 0: Measurement grid: dx=4mm, dy=4mm, dz=1.4mm
Reference Value = 1.362 V/m; Power Drift = -0.08 dB
Peak SAR (extrapolated) = 1.160 W/kg
SAR(1 g) = 0.306 mW/g; SAR(10 g) = 0.117 mW/g
Maximum value of SAR (measured) = 0.696 mW/g

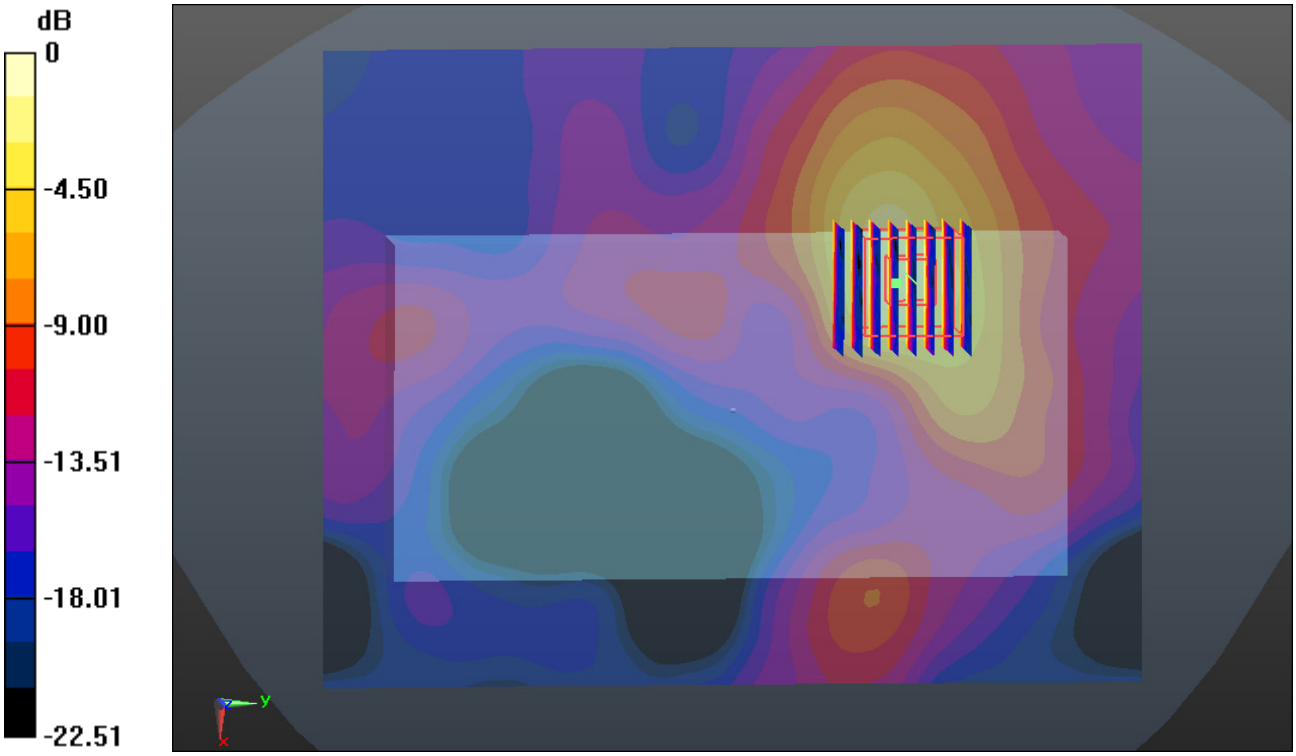

0 dB = 0.700mW/g

Test Laboratory: Sporton International Inc. SAR/HAC Testing Lab Date: 2014.06.13

#19_WLAN 5.2GHz_802.11a_6Mbps_Back 1cm_Ch48_Sample#1

Communication System: WIFI (0); Frequency: 5240 MHz;Duty Cycle: 1:1.146
Medium: MSL_5000_140613 Medium parameters used: f = 5240 MHz; σ = 5.221 mho/m; ε_r = 48.421; ρ = 1000 kg/m^3
Ambient Temperature：23.5 ℃； Liquid Temperature：22.6 ℃

DASY5 Configuration:
- Probe: EX3DV4 - SN3753; ConvF(4.67, 4.67, 4.67); Calibrated: 2014.03.26
- Sensor-Surface: 1.4mm (Mechanical Surface Detection)
- Electronics: DAE4 Sn1358; Calibrated: 2014.04.30
- Phantom: SAM2; Type: SAM; Serial: TP-1477
- Measurement SW: DASY52, Version 52.8 (7); SEMCAD X Version 14.4.5 (3634)

Ch48/Area Scan (121x181x1): Measurement grid: dx=10mm, dy=10mm
Maximum value of SAR (interpolated) = 0.351 mW/g

Ch48/Zoom Scan (8x8x7)/Cube 0: Measurement grid: dx=4mm, dy=4mm, dz=1.4mm
Reference Value = 0.695 V/m; Power Drift = 0.10 dB
Peak SAR (extrapolated) = 0.531 W/kg
SAR(1 g) = 0.163 mW/g; SAR(10 g) = 0.061 mW/g
Maximum value of SAR (measured) = 0.351 mW/g

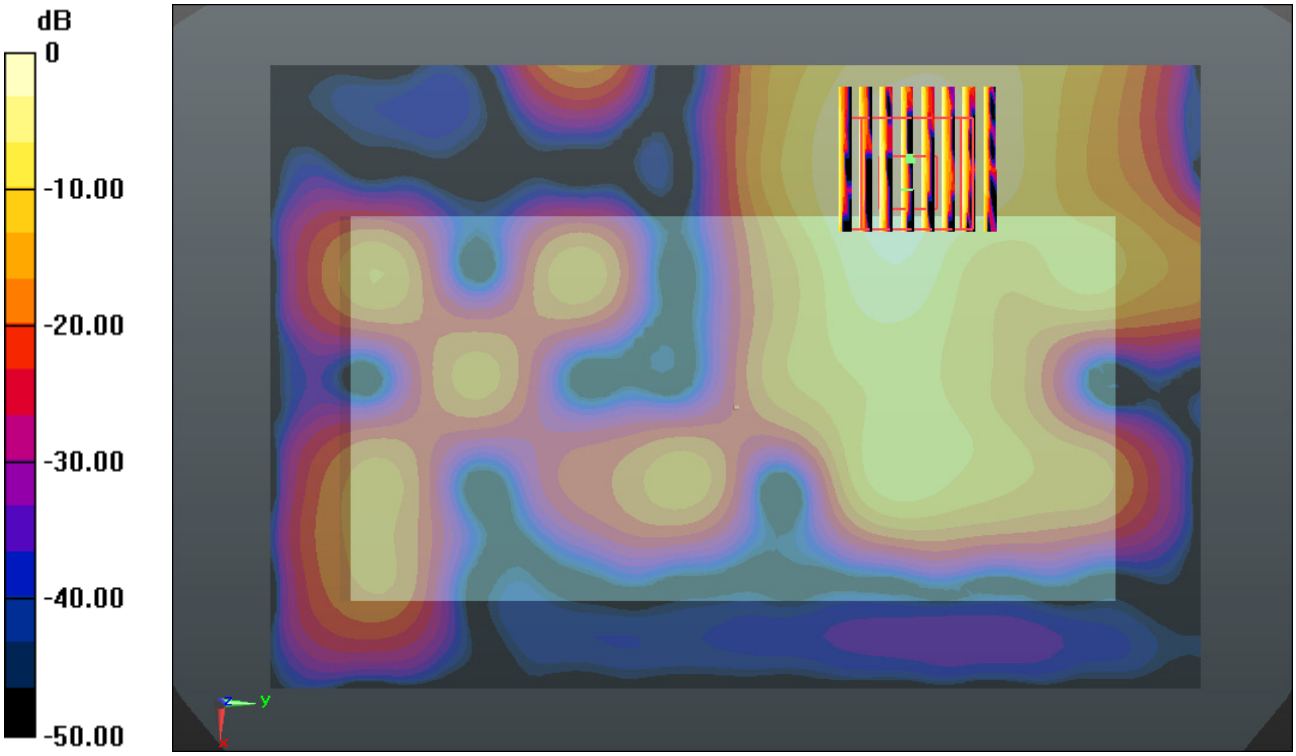

0 dB = 0.350mW/g

Test Laboratory: Sporton International Inc. SAR/HAC Testing Lab Date: 2014.06.13

#20_WLAN 5.3GHz_802.11a_6Mbps_Back 1cm_Ch64_Sample#2

Communication System: WIFI (0); Frequency: 5320 MHz;Duty Cycle: 1:1.146
Medium: MSL_5000_140613 Medium parameters used: f = 5320 MHz; σ = 5.329 mho/m; ε_r = 48.227; ρ = 1000 kg/m^3
Ambient Temperature：23.5 ℃； Liquid Temperature：22.6 ℃

DASY5 Configuration:
- Probe: EX3DV4 - SN3753; ConvF(4.42, 4.42, 4.42); Calibrated: 2014.03.26
- Sensor-Surface: 1.4mm (Mechanical Surface Detection)
- Electronics: DAE4 Sn1358; Calibrated: 2014.04.30
- Phantom: SAM2; Type: SAM; Serial: TP-1477
- Measurement SW: DASY52, Version 52.8 (7); SEMCAD X Version 14.4.5 (3634)

Ch64/Area Scan (71x91x1): Measurement grid: dx=20mm, dy=20mm
Maximum value of SAR (interpolated) = 0.291 mW/g

Ch64/Zoom Scan (8x8x7)/Cube 0: Measurement grid: dx=4mm, dy=4mm, dz=1.4mm
Reference Value = 0 V/m; Power Drift = 0.02 dB
Peak SAR (extrapolated) = 0.418 W/kg
SAR(1 g) = 0.125 mW/g; SAR(10 g) = 0.044 mW/g
Maximum value of SAR (measured) = 0.282 mW/g

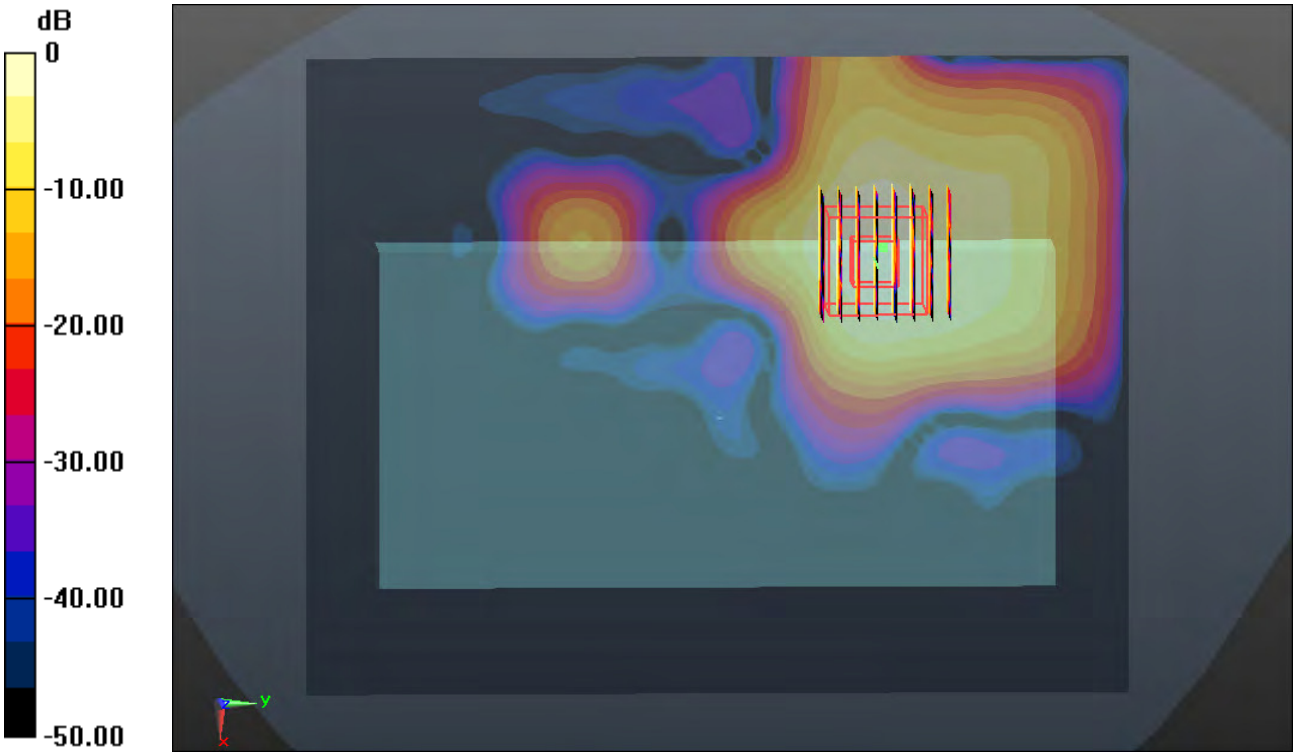

0 dB = 0.280mW/g

Test Laboratory: Sporton International Inc. SAR/HAC Testing Lab Date: 2014.06.14

#21_WLAN 5.5GHz_802.11a_6Mbps_Back 1cm_Ch116_Sample#2

Communication System: WIFI (0); Frequency: 5580 MHz;Duty Cycle: 1:1.146
Medium: MSL_5000_140614 Medium parameters used: f = 5580 MHz; σ = 5.688 mho/m; ε_r = 47.693; ρ = 1000 kg/m^3
Ambient Temperature：23.5 ℃； Liquid Temperature：22.5 ℃

DASY5 Configuration:
- Probe: EX3DV4 - SN3661; ConvF(4.21, 4.21, 4.21); Calibrated: 2014.03.10
- Sensor-Surface: 1.4mm (Mechanical Surface Detection)
- Electronics: DAE4 Sn1358; Calibrated: 2014.04.30
- Phantom: SAM2; Type: SAM; Serial: TP-1477
- Measurement SW: DASY52, Version 52.8 (7); SEMCAD X Version 14.4.5 (3634)

Ch116/Area Scan (121x181x1): Measurement grid: dx=10mm, dy=10mm
Maximum value of SAR (interpolated) = 0.499 mW/g

Ch116/Zoom Scan (8x8x7)/Cube 0: Measurement grid: dx=4mm, dy=4mm, dz=1.4mm
Reference Value = 1.180 V/m; Power Drift = -0.02 dB
Peak SAR (extrapolated) = 0.809 W/kg
SAR(1 g) = 0.244 mW/g; SAR(10 g) = 0.094 mW/g
Maximum value of SAR (measured) = 0.530 mW/g

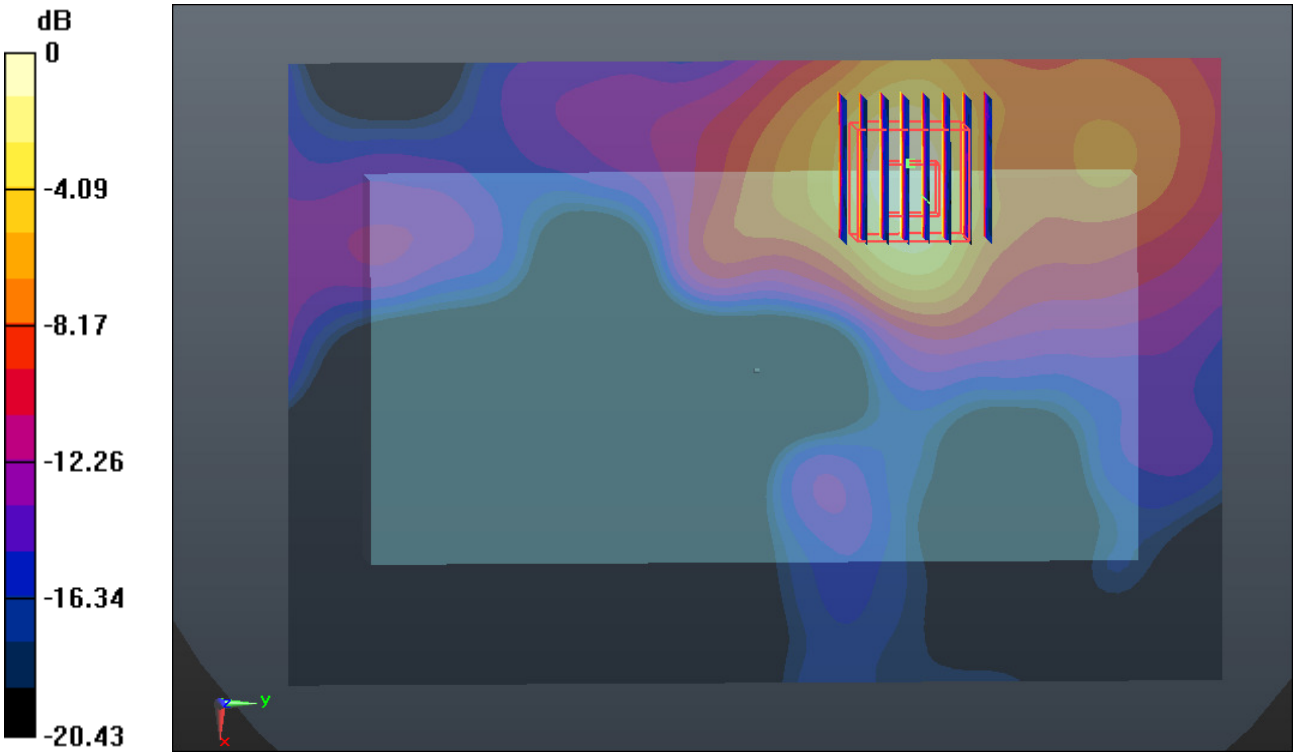

0 dB = 0.530mW/g