DEPLOYMENT GUIDE

TRANSPORTATION FIBERINMOTION

BROADBAND TRAIN TO GROUND COMMUNICATION

Release 4.5.10

RADWIN

Table of Contents

Chapter 1: Introduction

1.1 Scope of this Document 1-1
1.2 Transportation FiberinMotion Overview 1-1
1.2.1 Major Components 1-2
TBS (Transportation Base Station) units 1-3
TBS antennas 1-3
PoEs 1-3
TMUs (Transportation Mobile Units) 1-4
TMU antennas 1-4
ISUs 1-4
OSUs 1-5
1.2.2 Accessories 1-5
1.2.3 Management and Configuration Tools 1-5
RADWIN Configurator tool 1-5
RADWIN Air Link Performance Monitoring tool 1-5
1.3 Applications 1-6
1.3.1 Operational 1-6
1.3.2 Passenger Services 1-6
1.4 Features 1-6
1.4.1 General 1-6
1.4.2 Mobility Capabilities 1-6
1.4.3 Onboard Mobile Units 1-6
1.5 Document Notifications 1-7

Chapter 2: Site Installation

2.1 Scope of This Chapter 2-1
2.2 Wayside 2-1
2.2.1 Overview 2-1
General Guidelines 2-1
Power 2-1
Minimum Recommended Distances 2-1
General Mounting Arrangement 2-2
2.2.2 TBS Mounting 2-4
TBS Mounting on a vertical pole 2-6
TBS mounting on a horizontal pole 2-9
TBS mounting on a wall 2-13
2.2.3 PoE Devices for the TBS 2-16
2.2.4 TBS Antennas 2-17
TBS Antenna Mounting on a Vertical Pole 2-18
TBS Antenna Mounting on a Horizontal Pole 2-21
TBS Antenna Mounting on a Wall 2-22
TBS Antenna Mounting Kit Adaptor 2-22
2.2.5 TBS External Connections 2-25
2.2.6 Synchronization Units 2-25
Indoor Synchronization Unit (ISU) 2-25
Outdoor Synchronization Unit (OSU) 2-26
2.2.7 External GPS Antenna 2-27
2.2.8 Lightning Protection Unit (LPU) 2-28
2.2.9 Waterproofing 2-31
2.3 On-board 2-33
2.3.1 Overview 2-33
General Guidelines 2-33

Power 2-33
General Mounting Arrangement 2-33
2.3.2 TMU Mounting 2-33
Mounting on a wall 2-43
TMU - External Connections 2-43
2.3.3 PoE Devices for the TMU 2-43
2.3.4 TMU Antennas 2-44
2.3.5 TMU External Connections 2-47
2.4 Grounding 2-47
TBS and OSU 2-47
TMU 2-48
FinM PoE 2-48
External PoE 2-49
ISU 2-50
Antennas 2-50
Chapter 3: Network Guidelines
3.1 Scope of This Chapter 3-1
3.2 Overview 3-1
3.3 Wayside Network 3-1
3.4 On-board Network 3-3
3.5 On-board Physical Connectivity 3-4
3.6 Wayside Core Router 3-5
3.7 Basic IP Scheme and Data Flow Path 3-5
3.8 Recommended VLAN Assignment 3-7
3.9 Inter Base Handover (IBHO) Update Message 3-9
3.10 Intra Train Handover (ITHO) Update Message 3-12
Chapter 4: Configuring the Radio Network
4.1 Scope of This Chapter 4-1
4.2 Connecting to the Units 4-1
4.3 About the Configurator Tool 4-1
4.3.1 Method of Operation 4-2
4.4 Using the Configurator Tool 4-2
4.4.1 Main Tab 4-2
4.4.2 Project Tab 4-5
Upper Table 4-5
Lower Table: Quality of Service (QoS) Options 4-9
4.4.3 Line Tab 4-12
4.4.4 Towers Tab 4-15
4.4.5 Train Tab 4-17
4.5 Interference Mitigation for Co-channel Neighbors 4-17
4.5.1 Basic Situation 4-18
4.5.2 Necessary Pre-Conditions 4-18
Activation Conditions 4-19
De-Activation Conditions 4-19
4.5.3 Method of Operation 4-20
4.5.4 Configuring the Co-Channel Neighbor Interference Mitigation Option 4-21
4.6 Configuring Network Units 4-25
Configuring an Individual Unit: 4-25
Configuring Many Units at Once: 4-25
4.6.1 Configuring Transportation Base Stations (TBSs) 4-25
To re-configure a unit that is already installed: 4-26
4.6.2 Configuring Transportation Mobile Units (TMUs) 4-27
To re-configure a unit that is already installed in the field: 4-28
4.6.3 Configuring Indoor Synchronization Units (ISUs) 4-29
To re-configure a unit that is already installed in the field: 4-30

4.7 Configurator Messages 4-31
Appendix A: Antenna Guidelines
A.1 For Deployment in US/Canada..... A-1
Appendix C: Revision History

Chapter 1: Introduction

1.1 Scope of this Document

This publication shows how to install and operate RADWIN's Transportation FiberinMotion (Fiber in Motion or FinM) solution.

This publication is addressed primarily to system integrators as well as installing technicians.

1.2 Transportation FiberinMotion Overview

Transportation FiberinMotion is a train-to-wayside communications solution that ensures continuous high-speed wireless connectivity between the rolling stock, the tracks and control center.

The Transportation FiberinMotion system consists of powerful base stations deployed along the tracks that connect to mobile units installed onboard the rolling stock. The solution operates in challenging outdoor conditions and underground tunnels.

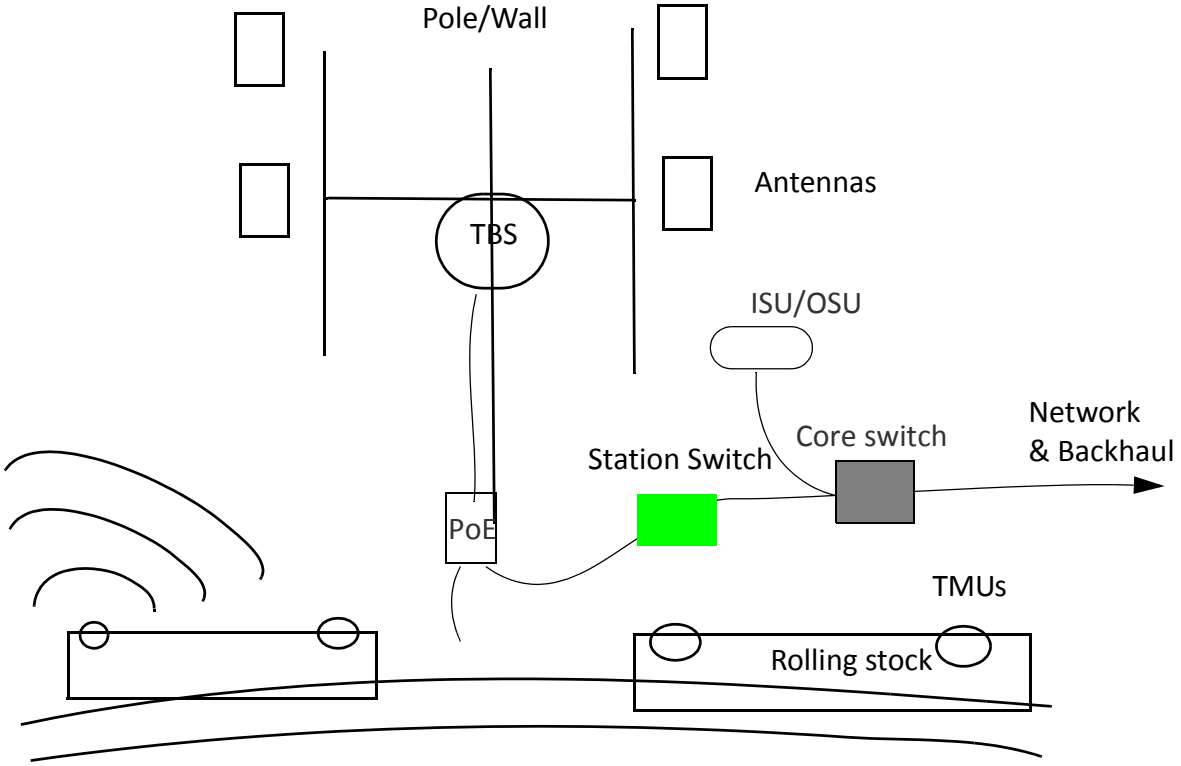

Figure 1-1: Fiber in Motion Overview

A Fiber in Motion solution works as follows:

- TBS (Transportation Base Station) units are installed on poles or walls either outdoors or in a tunnel, and are equipped with antennas (usually 4),
- The TBS units communicate with the backhaul network via a PoE device or fiber,
- The TBS units transmit to/receive from TMUs (Transportation Mobile Units) installed on board rolling stock (also equipped with antennas for the TMUs), and located within the beam of the TBS antennas,
- The TMU radios, also powered by PoE devices, provide communication connections for on-board equipment such as routers and WiFi devices.
- Indoor Synchronization Unit/Outdoor Synchronization Units (ISU/OSU) synchronize the transmission of below ground TBS units.

1.2.1 Major Components

The major components of the Transportation FiberinMotion solution are shown below:

TBS (Transportation Base Station) units

TBS units communicate with the backhaul network via a PoE device or fiber, and transmit to/ receive from TMUs (Transportation Mobile Units) installed on board rolling stock.

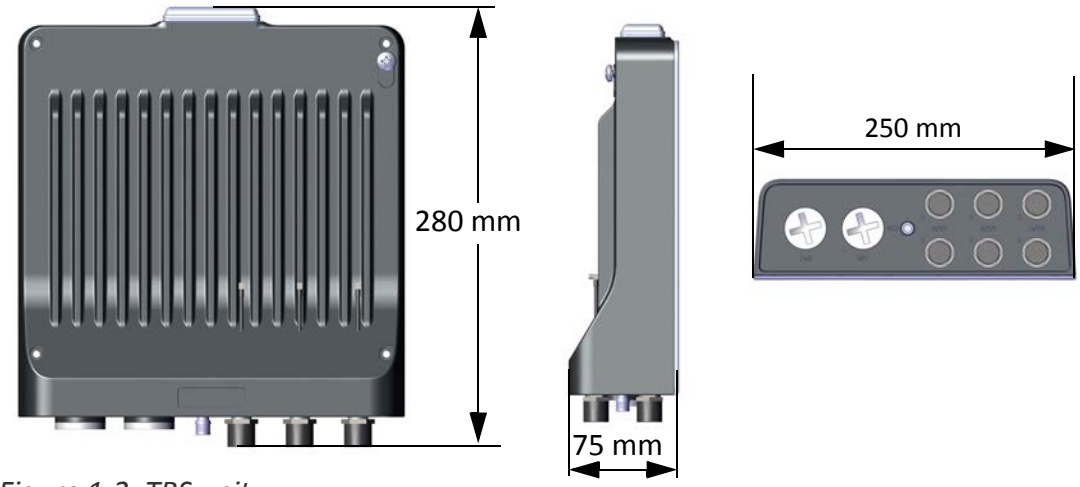

Figure 1-2: TBS unit

TBS antennas

Although there are many different types of antennas (see Appendix A, Antenna Guidelines for a list of permitted antennas), we recommend using flat antennas like the one shown here, available from RADWIN:

Figure 1-3: TBS antenna

PoEs

Power-over-ethernet devices are used to supply both power and network communications to the TBS, TMU, and OSUs. Use only PoEs recommended by RADWIN. In addition, the TMU can be supplied from an alternative PoE, as shown.

When working with the TMU, note that a special PoE-TMU cable must be used.

Outdoor PoE **Indoor PoE** PoE for the TMU

Figure 1-4: PoE Units

TMUs (Transportation Mobile Units)

TMU radios, also powered by PoE devices, transmit to/receive from TBSs installed on wayside poles or walls, and provide communication connections for on-board equipment such as routers and WiFi devices.

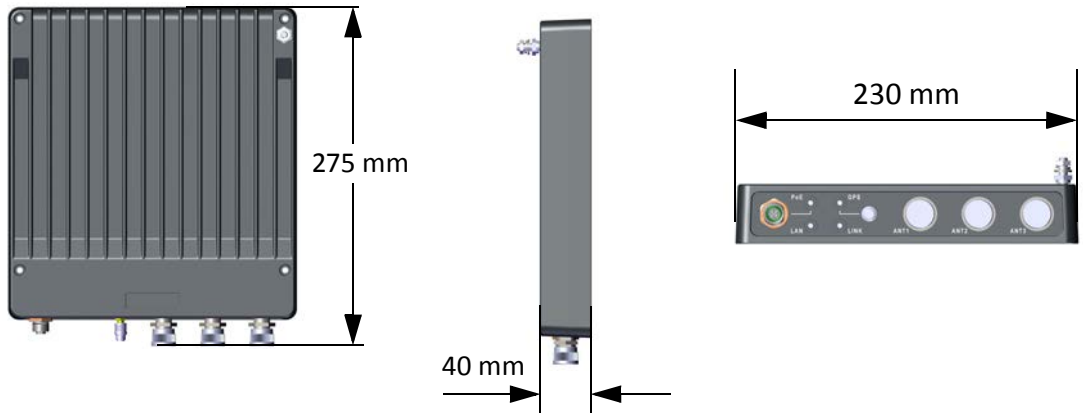

Figure 1-5: TMU radio

TMU antennas

Use shark-fin antennas, installed on the roof of the rolling stock (see Appendix A, Antenna Guidelines for a list of permitted antennas):

Figure 1-6: Shark-fin antenna for TMU

ISUs

Indoor Synchronization Units are used to synchronize TBS transmissions. The ISUs are installed in tunnels.

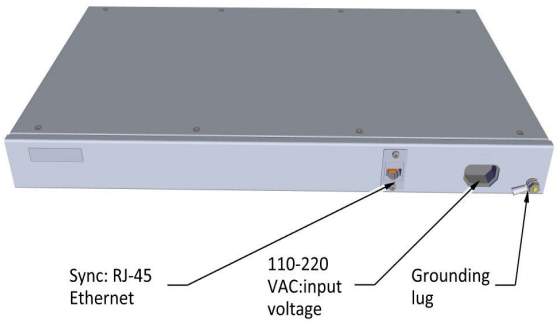

Figure 1-7: Indoor Synchronization Unit

OSUs

Outdoor Synchronization Units are used to synchronize TBS transmissions. The OSUs are based on the same hardware casing as the TBS, and are installed in outdoor locations.

Figure 1-8: Outdoor Synchronization Unit

1.2.2 Accessories

You will also need some of the following accessories:

- Lightning protector unit - for use with outdoor products
- CAT 6 cables - various lengths for use with radios and PoE devices
- Grounding cables
- Additional mounting kits for the antennas and PoEs - each antenna and each external PoE installed on a pole needs a mounting kit.

1.2.3 Management and Configuration Tools

RADWIN Configurator tool

This tool allows you to carry out bulk commissioning of groups of radios, usually on a track by track basis. Its use is covered in Radio Network Configuration.

RADWIN Air Link Performance Monitoring tool

The Air Link Performance Monitoring (ALPM) tool is an advanced analysis tool for RADWIN's Fiber in Motion product line.

The ALPM tool accumulates all important events and information related to each unit in the system and to the target to which it has a link.

1.3 Applications

1.3.1 Operational

- Real-time CCTV transmission
- Level crossing detection
- Onboard ticketing
- Communications-based train control (CBTC)

1.3.2 Passenger Services

- High-speed internet access
- Passenger Information Systems
- Multimedia entertainment

1.4 Features

1.4.1 General

» Ethernet connectivity between base station and subscriber units
» Advanced OFDM & MIMO 2x2 and 3x3 for nLOS and NLOS performance
» Enhanced interference mitigation capability
» Inter & intra site sync to reduce self interference
» Long range between base stations
» Frequency bands - 4.9-5.9GHz
» Dedicated Bandwidth ensuring SLA & latency
» Low and constant latency – min < 3ms, typical 4 to 20ms
» Channel bandwidth – 20/40/80 MHz
» Regulations supported - FCC/IC/WPC/MII/Universal/Japanese Regulations

1.4.2 Mobility Capabilities

» Up to 750 Mbps per TBS
» High speed - up to 300 Km per hour / 186 miles per hour
» Up to 16 TMUs per TBS
» RADWIN Network Management System support
» Smart Bandwidth Management (SBM) using dynamic bandwidth allocation to maximize service provider throughput and adhere to customer SLAs

1.4.3 Onboard Mobile Units

» 200 Mbps aggregate throughput per TMU

- Supports customer SLAs by assignment of dedicated bandwidth for uplink and downlink per TMU, at the TBS
- Separate uplink and downlink configurable Maximum Information Rate (MIR) per TMU

1.5 Document Notifications

Notifications consist of Warnings, Cautions and Notes.

Warning	**Warning**: risk of danger to persons.
Caution	**Caution**: risk of damage to equipment or of service degradation
Note	• Provide additional background • Offer a recommendation • Remind you of something that should be kept in mind

Chapter 2: Site Installation

2.1 Scope of This Chapter

This chapter describes how to install the equipment for the Transportation FiberinMotion solution.

2.2 Wayside

The Fiber in Motion solution uses multiple antennas to enable MIMO and Diversity modes. The solution relies on antenna spacing, as well as dual polarization / dual slanted antennas to differentiate the radio streams.

2.2.1 Overview

General Mounting Arrangement

The TBS can be mounted on a pole or a wall, together with its antennas, LPUs and PoE device. To enable better MIMO conditions, the antennas should be divided between vertical and horizontal polarizations. Figure 2-1 shows a schematic view with these polarizations.

- Place the tower/TBS at the location determined by the site survey.
- Make sure there is sufficient line-of-sight towards the track segment the antennas will cover
- Make sure that there are no obstacles directly in front of the antennas
- The lowest antenna must be higher than the highest rail car on the line

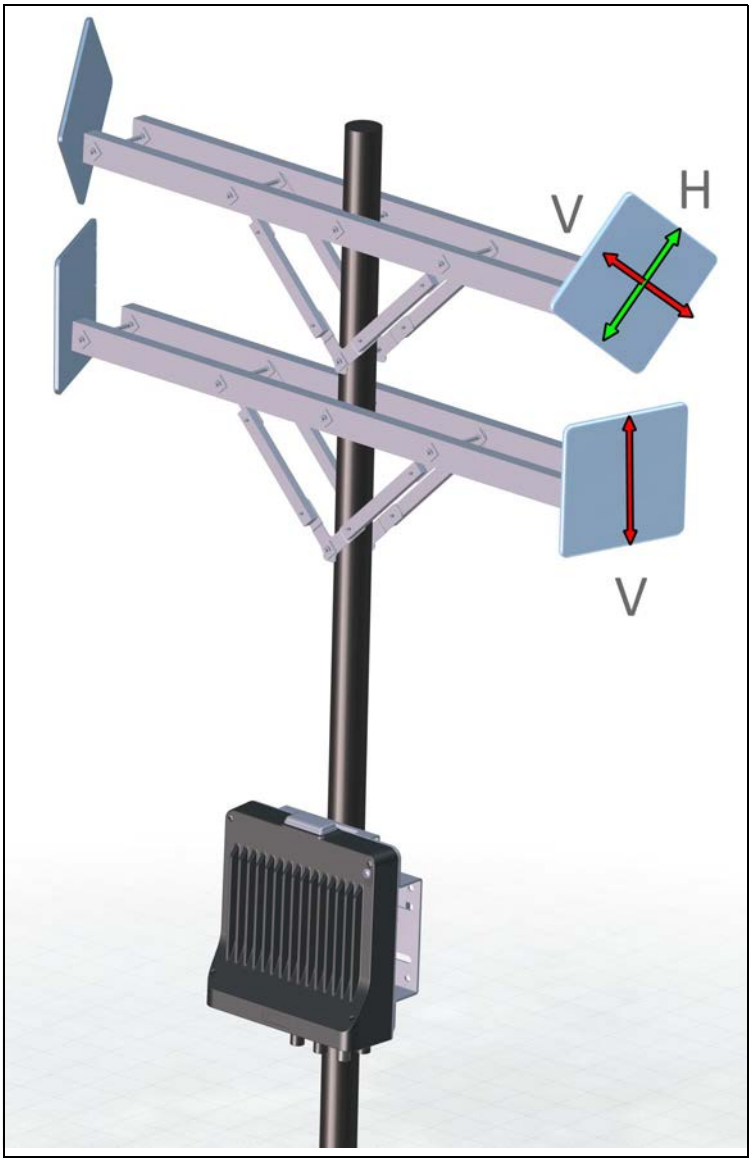

Figure 2-1: TBS - Base Station mounting with antennas (outside)

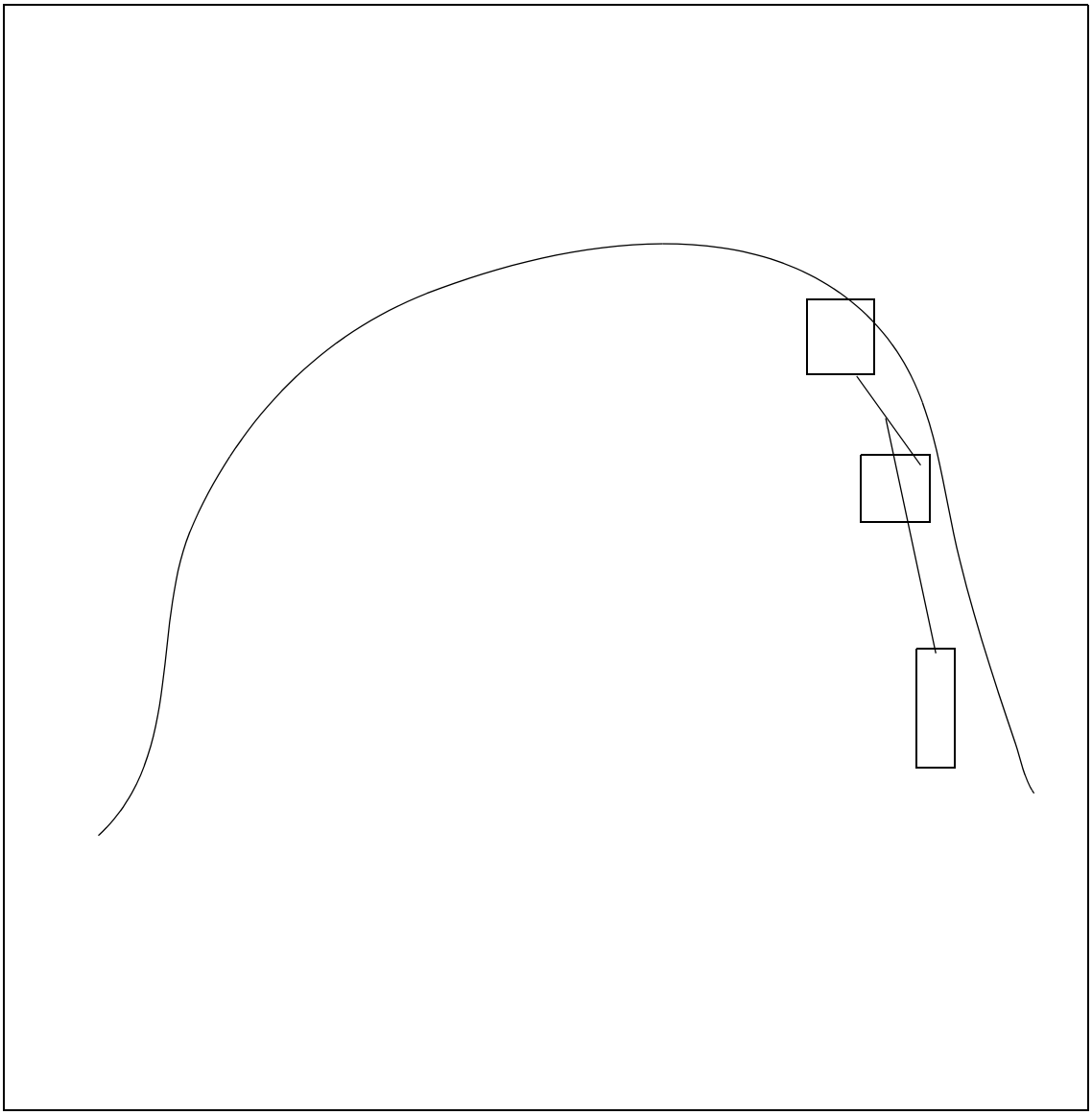

Table 2-1: TBS - Base Station mounting with antennas (tunnel)

Power

- Use the PoE to supply power to the TBS
- Use the PoE or the SFP fiber connection to provide a service connection to the TBS.
- Install two Lightning Protection Units (LPU): One close to the TBS, and the other close to the PoE.

Minimum Recommended Distances

There are two antennas for each direction: A is for approaching trains, and B is for receding trains (see Figure 2-1). Separate the antennas as much as possible, and maintain the following minimal distances:

- Recommended vertical separation between each antenna is 1.0m.

2.2.2 TBS Mounting

The TBS can be mounted on a vertical or horizontal pole, or on a wall.

- **Vertical pole:** see page 2-6 for directions relevant to all sizes.
  - **Thin pole:** see page 2-6.
  - **Medium pole:** see page 2-8
  - **Thick pole:** see page 2-8
- **Horizontal pole:** see page 2-9 for directions relevant to all sizes.
  - **Thin pole:** see page 2-11.
  - **Medium pole:** see page 2-12
  - **Thick pole:** see page 2-13
- **Wall:** The TBS can be mounted on a wall, see page 2-13.

Check the package contents:

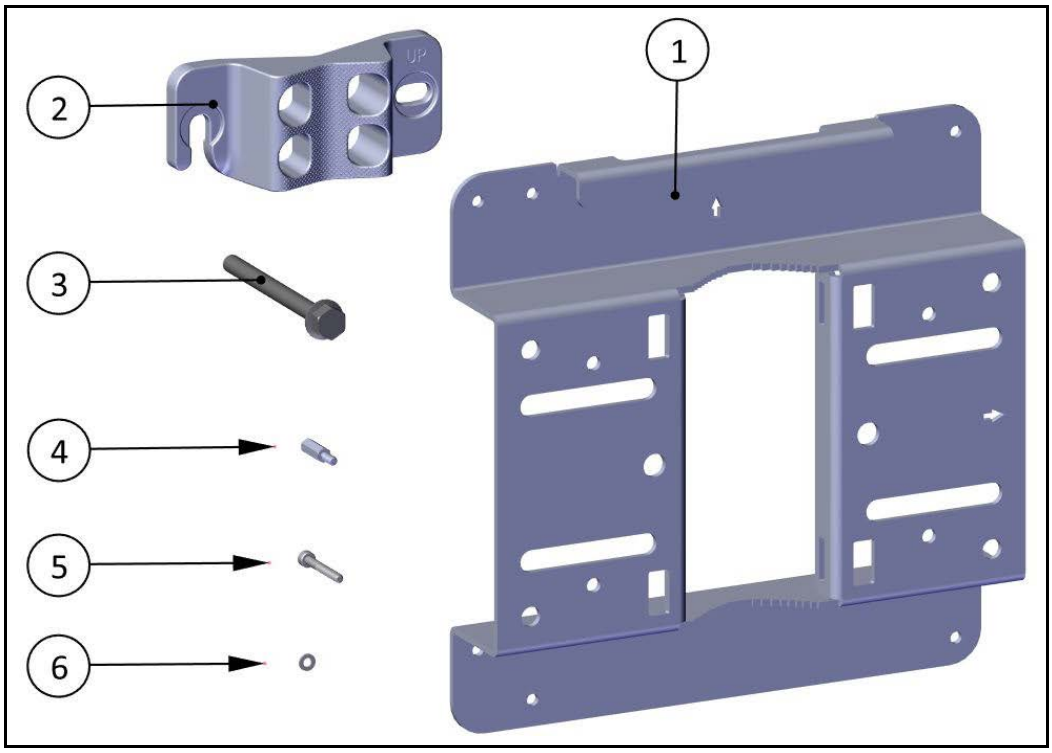

Figure 2-2: TBS mounting kit package contents

Table 2-2: TBS mounting kit package contents

Item No.	Description	Quantity
1	Base plate	1
2	Pole clamp	1
3	Hex screw with flange M8x90	2

Table 2-2: TBS mounting kit package contents (Continued)

Item No.	Description	Quantity
4	Standoffs M4x16	4
5	Allen screws M4x30	4
6	Washers for allen screws	4

TBS Mounting on a vertical pole

All sizes

1. Fasten the standoffs to the base plate in the holes labeled “V” as shown:

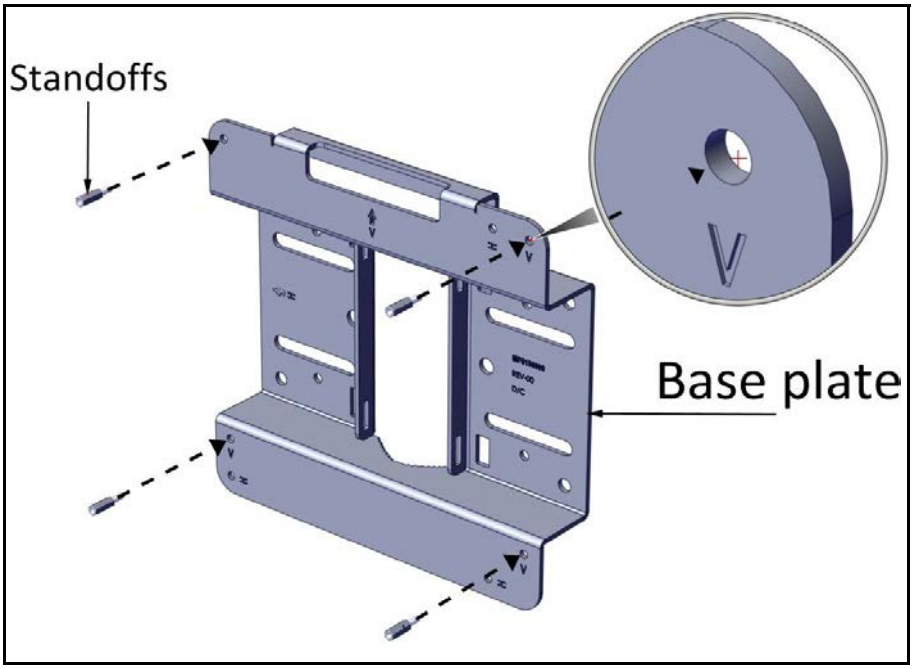

Figure 2-3: Fasten standoffs to base plate (for vertical pole)

2. Place the TBS as shown over the standoffs, and using the Allen screws and washers, fasten the TBS to the base plate.

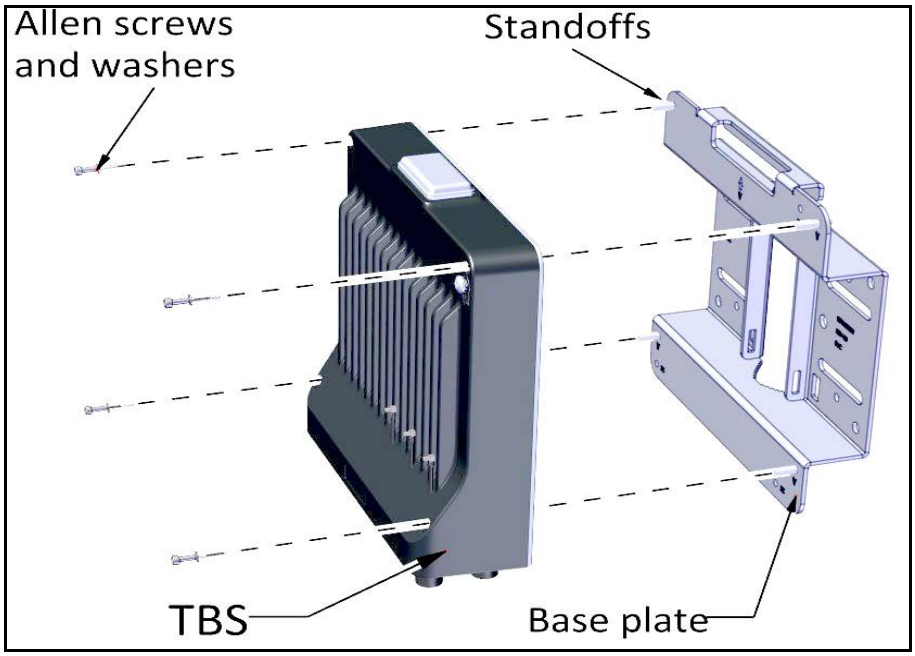

Figure 2-4: Fasten TBS to base plate (for vertical pole)

Vertical Pole - thin

1. Diameter 3/4 to 1 1/2: Before raising the TBS on the pole, position the pole clamp as shown in the following two figures. Do not completely tighten the bolts:

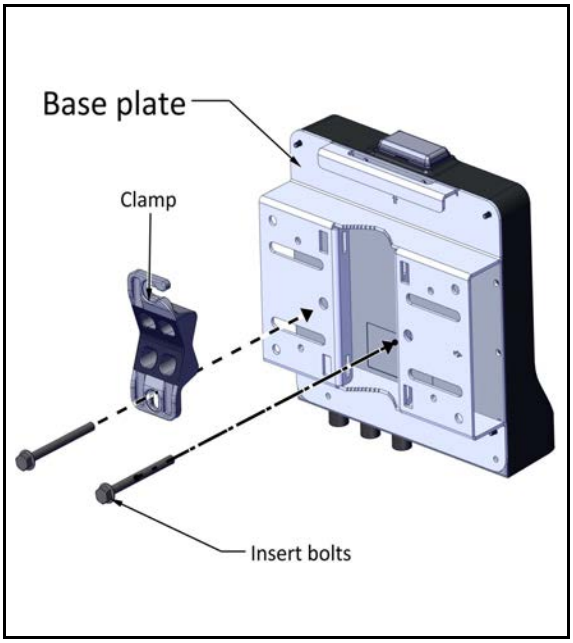

Figure 2-5: Thin pole: Fasten clamp to base plate

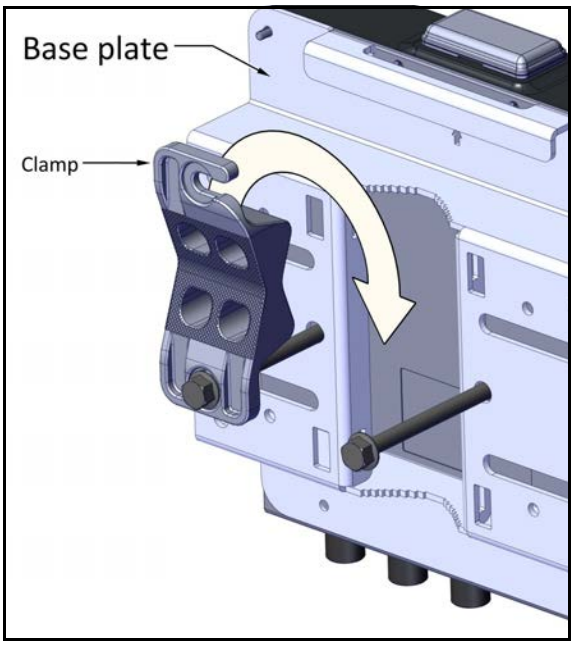

Figure 2-6: Thin pole: Do not completely tighten bolts

2. Place this assembly on the pole where you want to mount the TBS. Once it is in place, rotate the pole clamp as shown, then tighten both bolts.

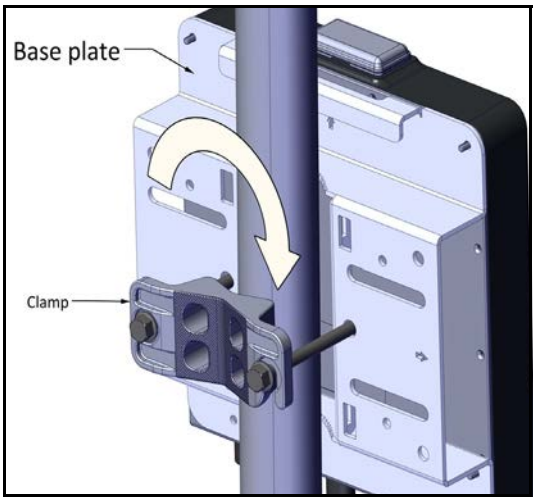

Figure 2-7: Thin pole: Rotate clamp

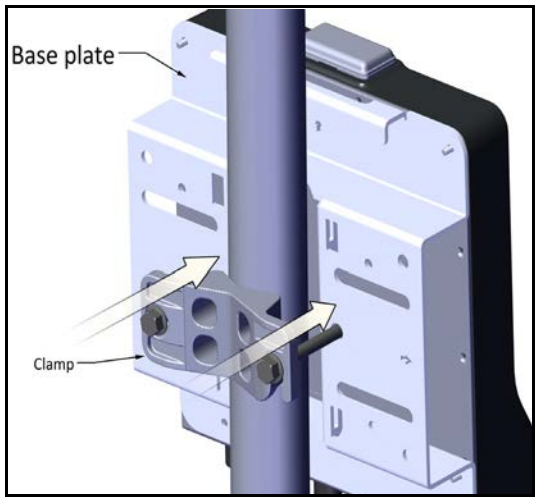

Figure 2-8: Thin pole: tighten bolts

Vertical pole - medium

1. Diameter 2 to 3: Before raising the TBS on the pole, position the pole clamp as shown in the following two figures. Do not completely tighten the bolts:

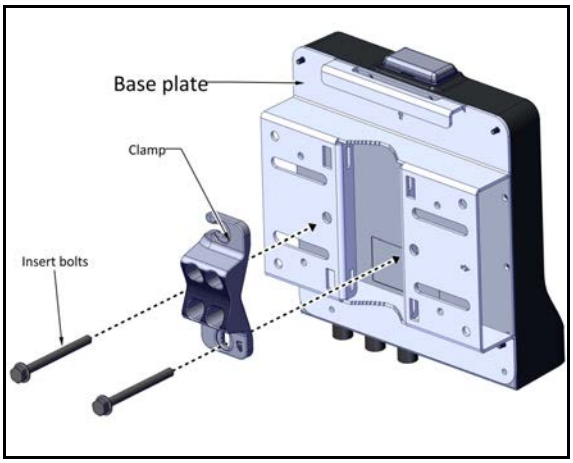

Figure 2-9: Medium pole: Fasten clamp to base plate

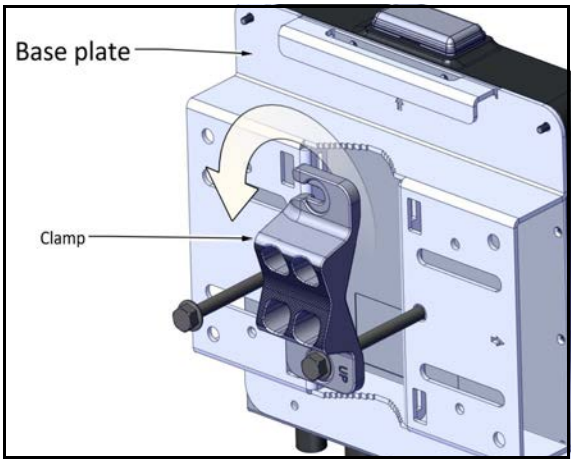

Figure 2-10: Medium pole: Do not completely tighten bolts

2. Place this assembly on the pole where you want to mount the TBS. Once it is in place, rotate the pole clamp as shown, then tighten both bolts.

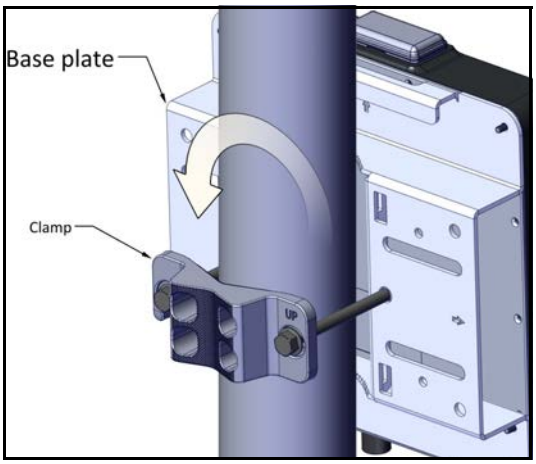

Figure 2-11: Medium pole: Rotate clamp

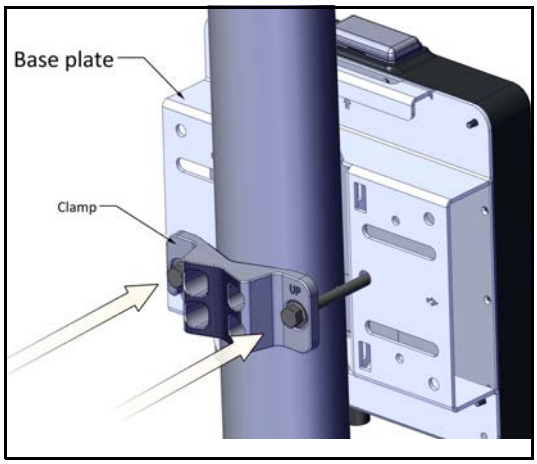

Figure 2-12: Medium pole: tighten bolts

Vertical Pole - thick

1. Diameter larger than 3: Use worm drive clamps (not supplied), threaded through the holes as shown in Figure 2-13, or U-bolts (not supplied), fastened using the holes as shown in Figure 2-14:

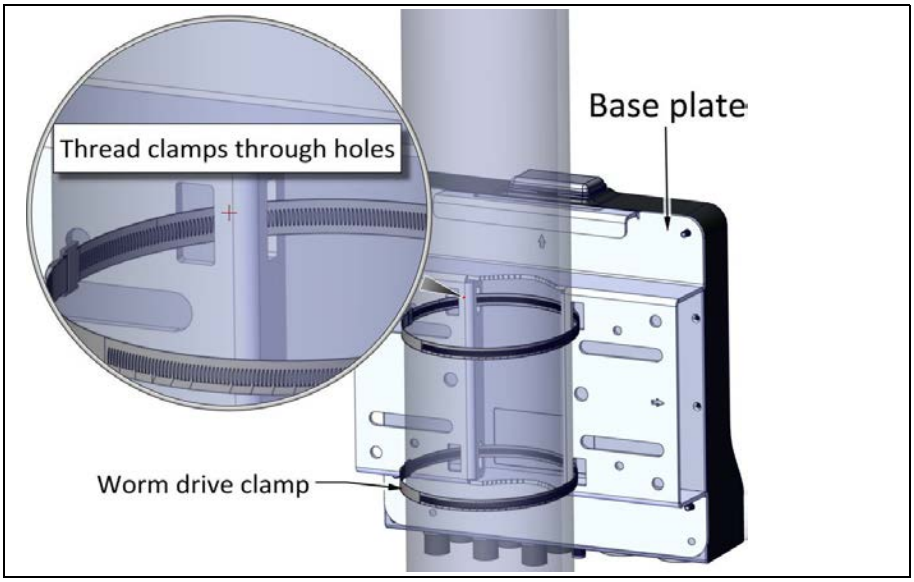

Figure 2-13: Using worm drive clamps for a thick pole

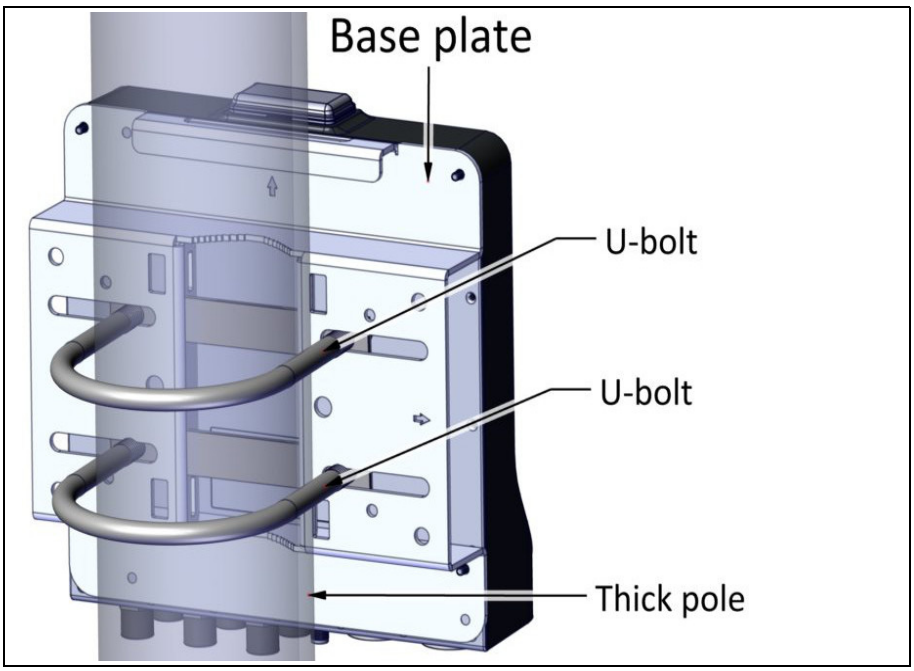

Figure 2-14: Using U-bolts for a thick pole

TBS mounting on a horizontal pole

All sizes

1. Before fastening the TBS to the base plate (see Step 1. on page 2-6), rotate the plate by 90° clockwise. Make sure the arrow next to the “H” points up.

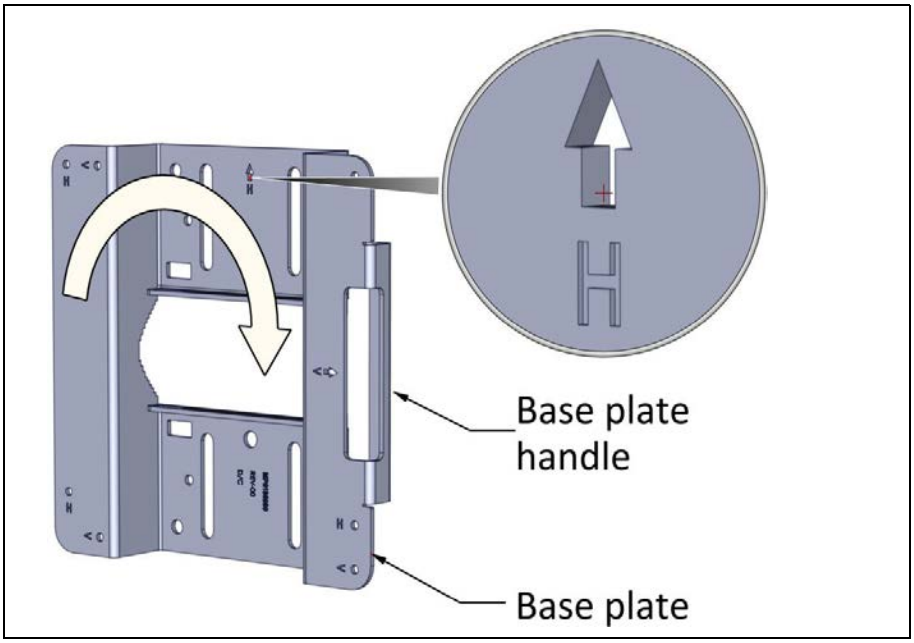

Figure 2-15: Rotate base plate clockwise 90° for horizontal pole

2. Fasten the standoffs to the base plate in the holes labeled “H” as shown:

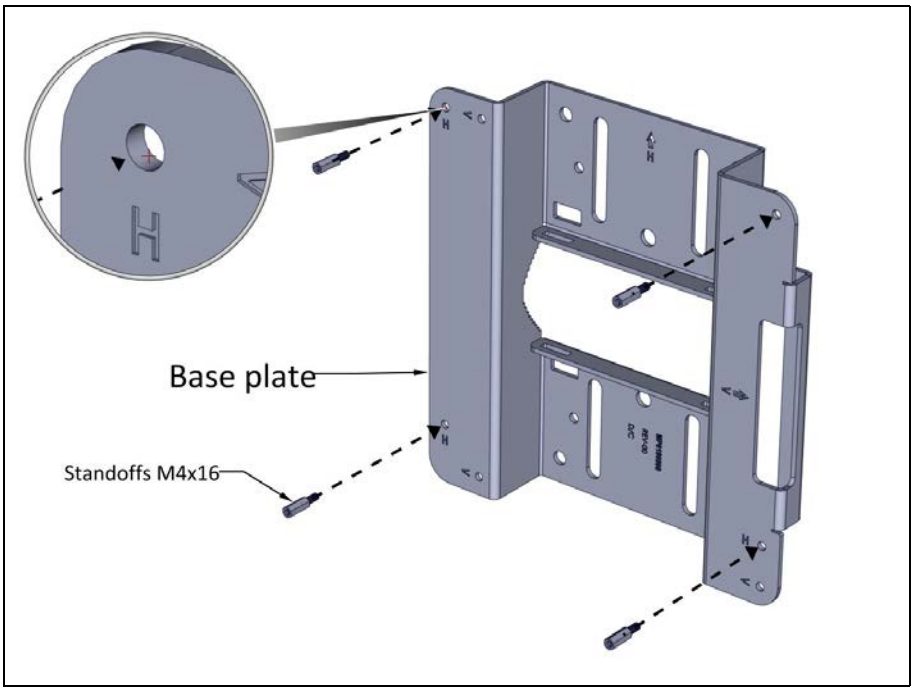

Figure 2-16: Fasten standoffs to base plate (for horizontal pole)

3. Place the TBS as shown over the standoffs, and using the Allen screws and washers, fasten the TBS to the base plate.

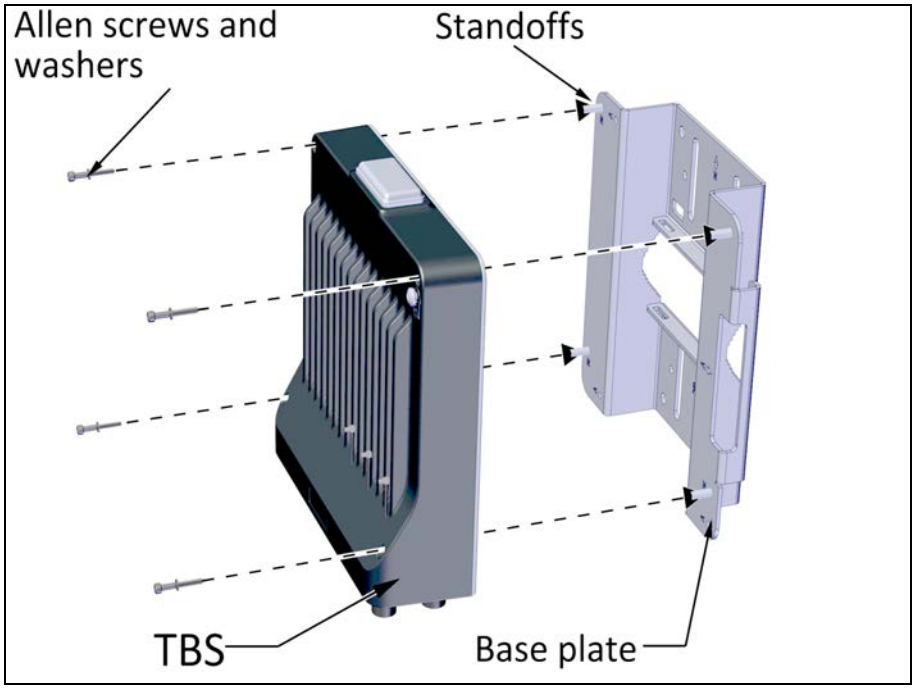

Figure 2-17: Fasten TBS to base plate (for horizontal pole)

Horiztonal Pole - thin

1. Diameter 3/4 to 1 1/2: Before raising the TBS on the pole, position the pole clamp as shown in the following two figures. Do not completely tighten the bolts:

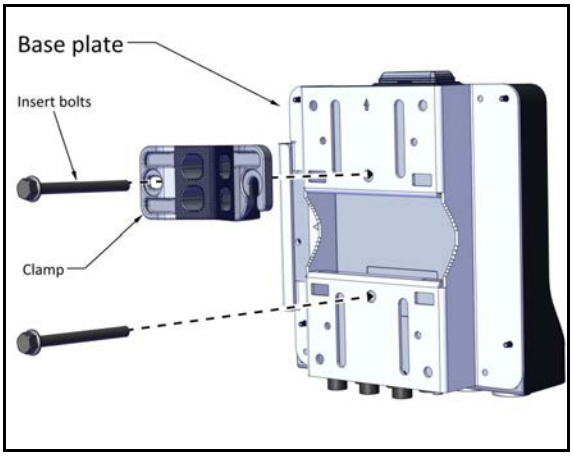

Figure 2-18: Thin pole: Fasten clamp to base plate

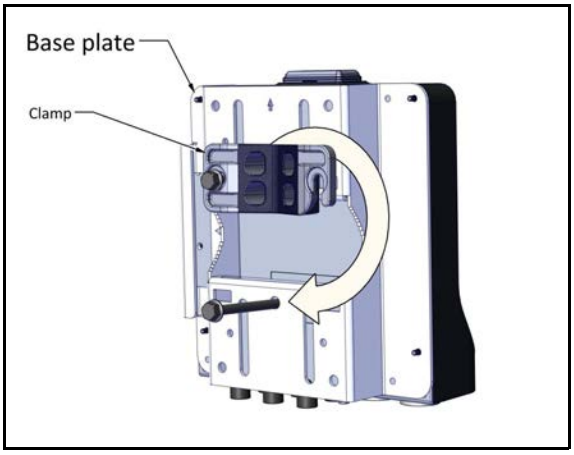

Figure 2-19: Thin pole: Do not completely tighten bolts

2. Place this assembly on the pole where you want to mount the TBS. Once it is in place, rotate the pole clamp as shown, then tighten both bolts.

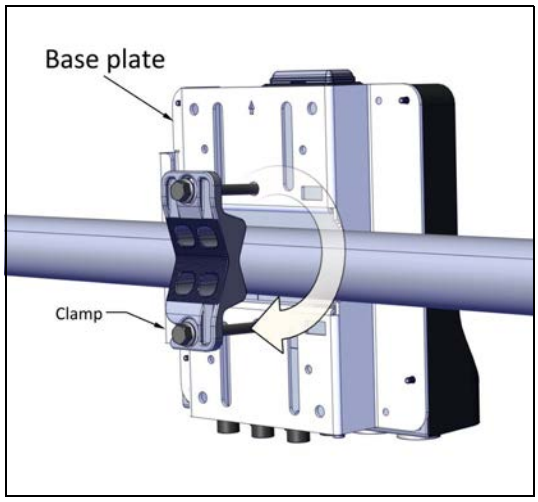

Figure 2-20: Thin pole: Rotate clamp

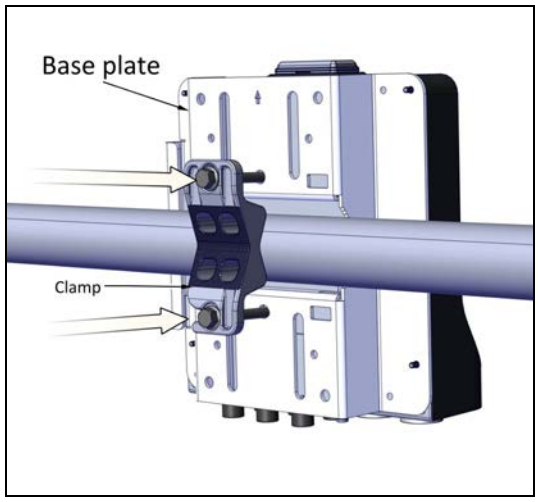

Figure 2-21: Thin pole: tighten bolts

Horizontal Pole - medium

1. Diameter 2 to 3: Before raising the TBS on the pole, position the pole clamp as shown in the following two figures. Do not completely tighten the bolts:

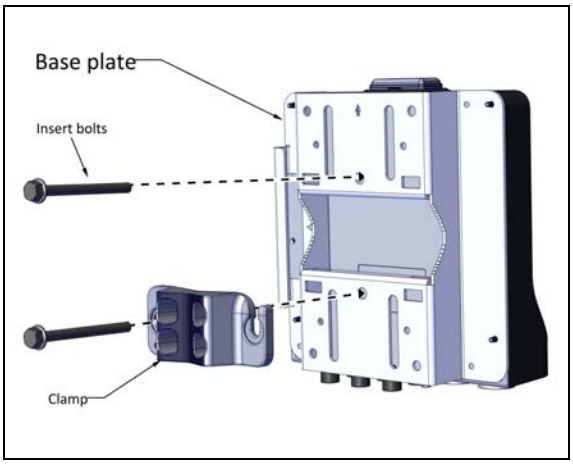

Figure 2-22: Medium pole: Fasten clamp to base plate

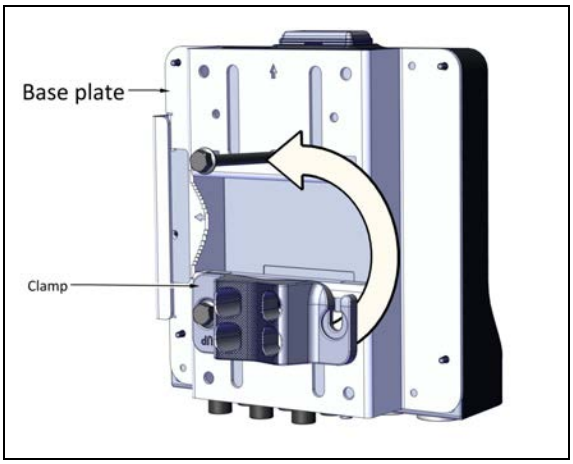

Figure 2-23: Medium pole: Do not completely tighten bolts

2. Place this assembly on the pole where you want to mount the TBS. Once it is in place, rotate the pole clamp as shown, then tighten both bolts.

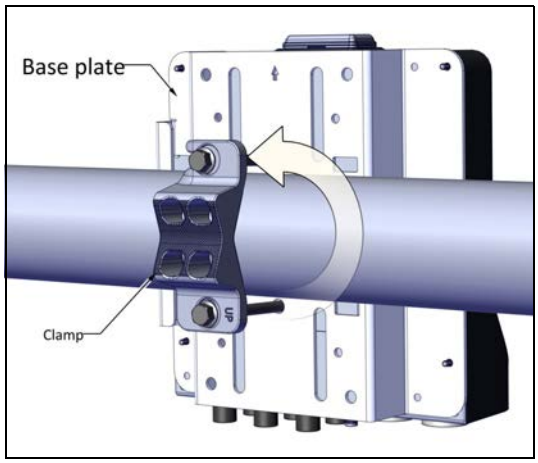

Figure 2-24: Medium pole: Rotate clamp

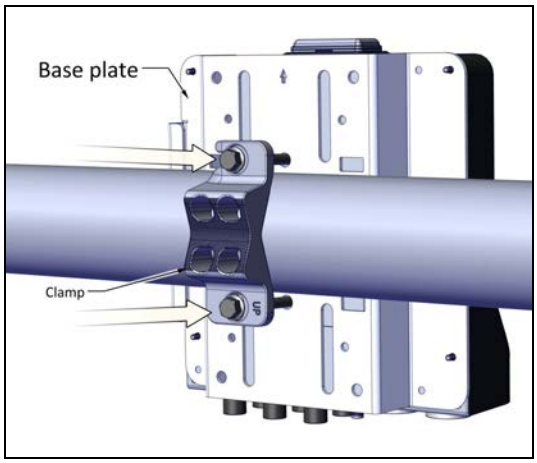

Figure 2-25: Medium pole: tighten bolts

Horiztonal Pole - thick

1. Diameter larger than 3: Use metal bands (not supplied), threaded through the holes as shown in Figure 2-26, or U-bolts (not supplied), fastened using the holes as shown in Figure 2-27:

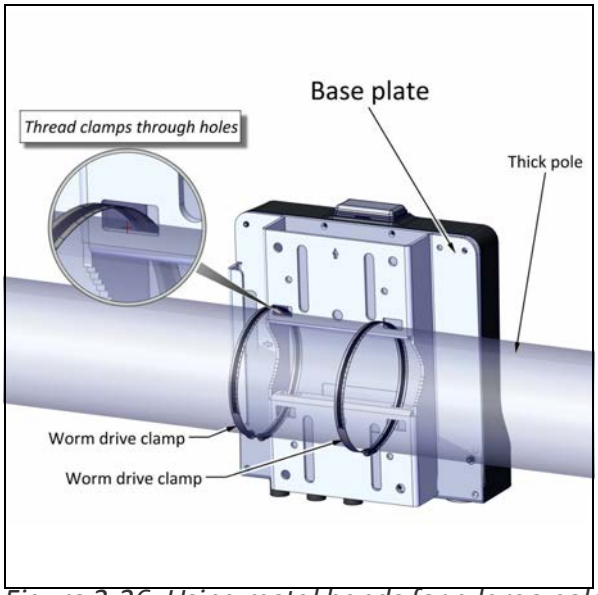

Figure 2-26: Using metal bands for a large pole

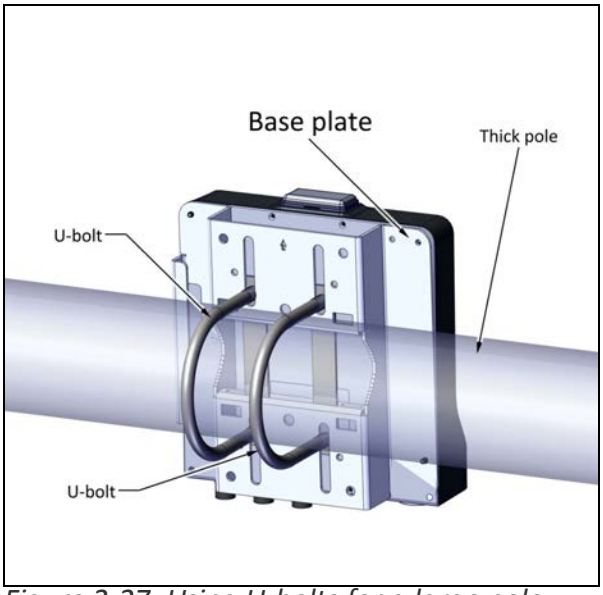

Figure 2-27: Using U-bolts for a large pole

TBS mounting on a wall

1. Fasten the standoffs to the base plate in the holes labeled “V” or “H”, whichever is more convenient, as shown:

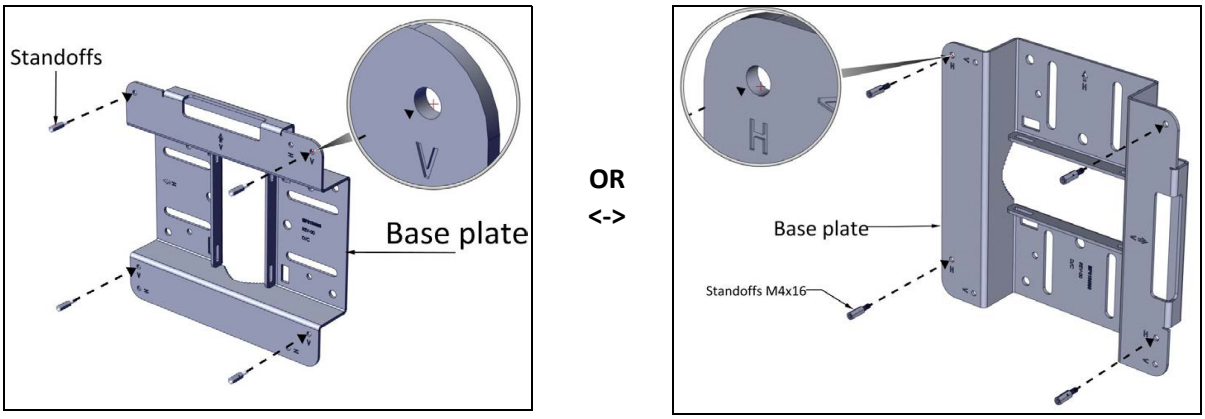

Figure 2-28: Fasten standoffs to base plate

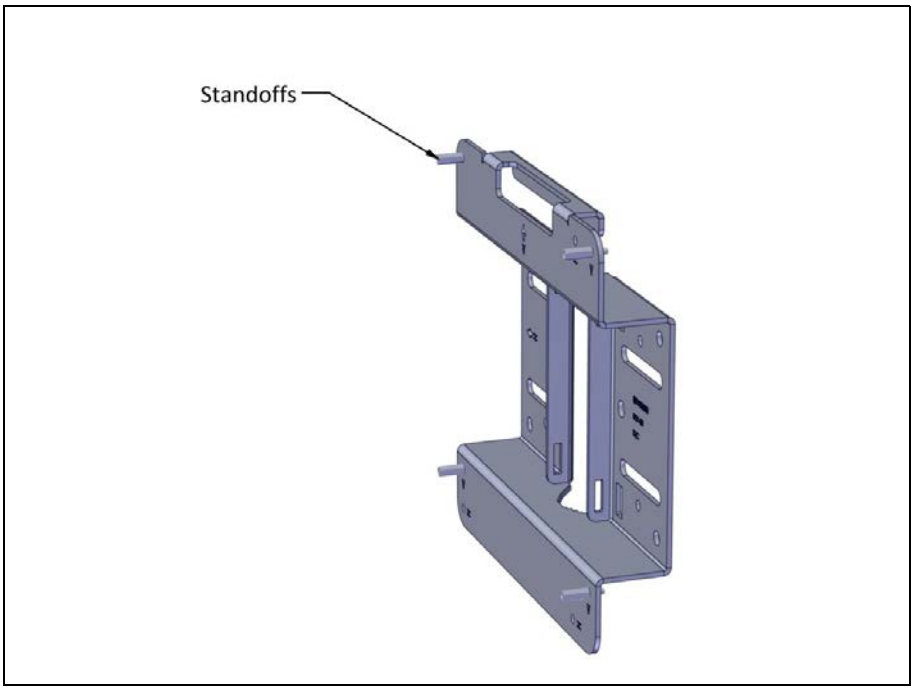

Figure 2-29: Standoffs fastened to base plate

2. Use anchor bolts to attach base plate to a wall, as shown:

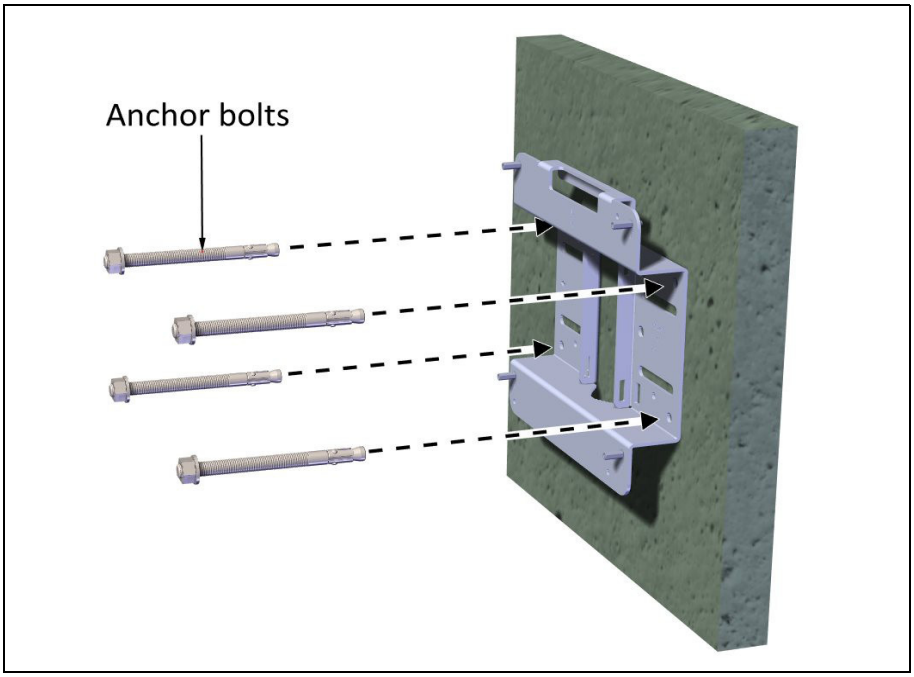

Figure 2-30: Attach base plate to wall

3. Place the TBS as shown over the standoffs, and using the Allen screws and washers, fasten the TBS to the base plate.

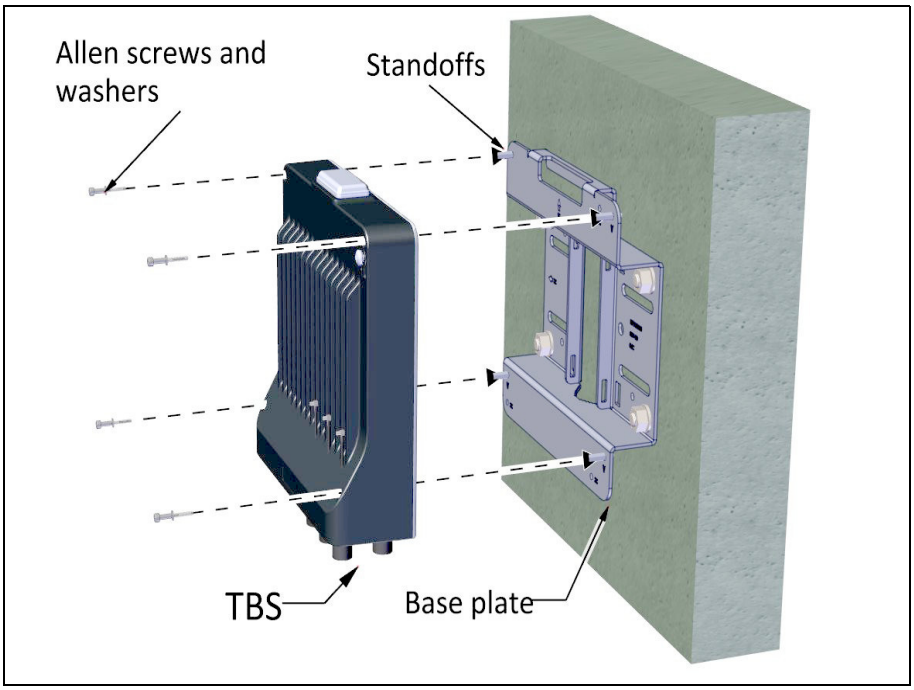

Figure 2-31: Fasten TBS to base plate on wall

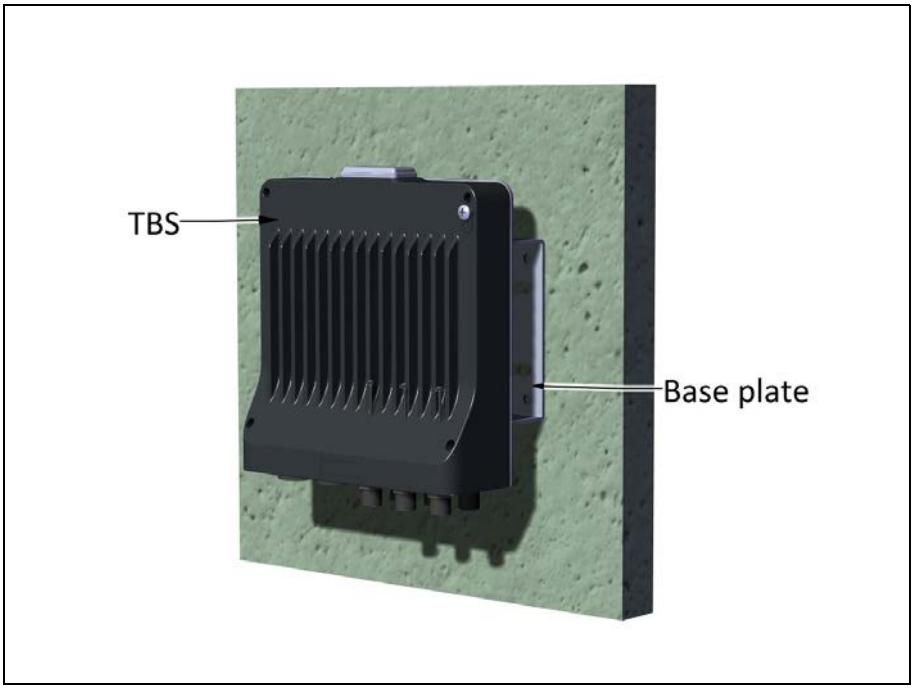

Figure 2-32: TBS mounted on a wall

Caution

Always mount a TBS with the connectors on the bottom. Never mount a unit horizontally.

2.2.3 PoE Devices for the TBS

The TBS is supplied by a PoE device, mounted in the same manner as an antenna, or via an indoor unit, installed in an electrical hut.

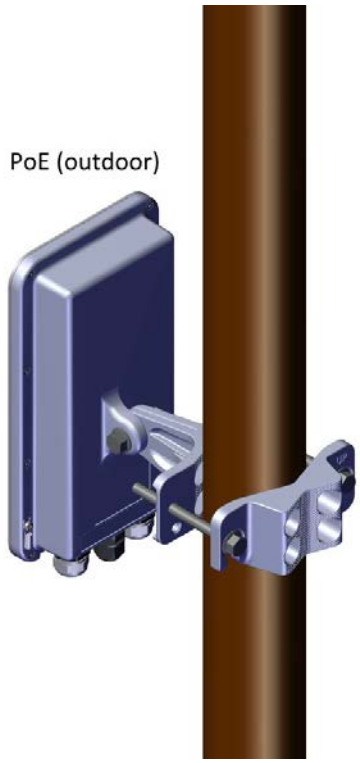

Figure 2-33: PoE mounted on a pole

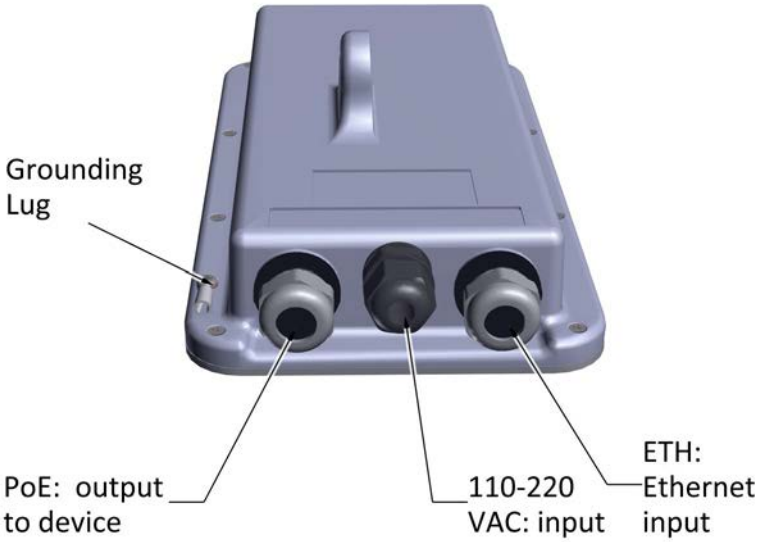

Figure 2-34: PoE external connections

2.2.4 TBS Antennas

Use the antenna mounting kit (different from the TBS mounting kit) to mount a TBS antenna on a pole or wall. The same mounting kit is used to mount an external PoE device.

- **Vertical pole:** see page 2-19 to

- **Thin pole:** see page 2-18.
- **Medium pole:** see page 2-19
- **Thick pole:** see page 2-20

- **Horizontal pole:** see page 2-21 for directions relevant to all sizes.
- **Wall:** see page 2-22.

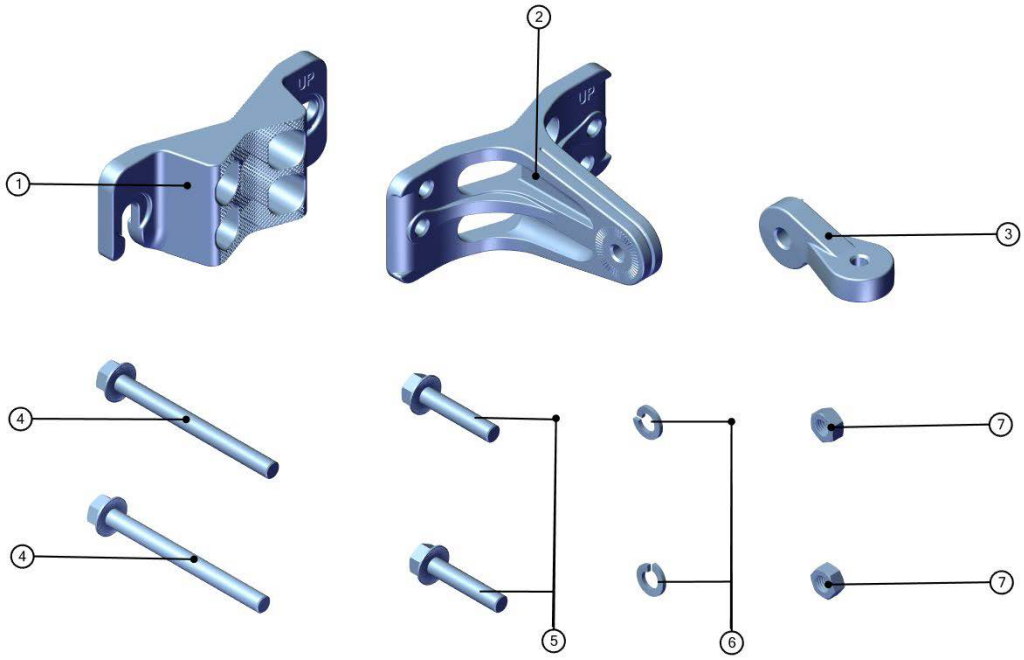

Item	Description	Qty
1	Pole Clamp	1
2	Radio Holder	1
3	Radio Vertical Adaptor	1

Item	Description	Qty
4	Hex Bolt 8x90	2
5	Hex Bolt 8x40	2
6	Spring Lock Washer	2

Item	Description	Qty
7	M8 Nut	2

Figure 2-35: Antenna Mounting Kit Contents

Note

Tighten all bolts with a torque of 15Nm.

TBS Antenna Mounting on a Vertical Pole

Thin Pole

This method is for mounting the TBS antenna on a pole of pipe size 3/4 to 1 1/2.

Warning

Do not mount the TBS antenna on a pole smaller than 3/4.

1. When mounting on a thin pole, position the pole clamp as shown in the following figures:

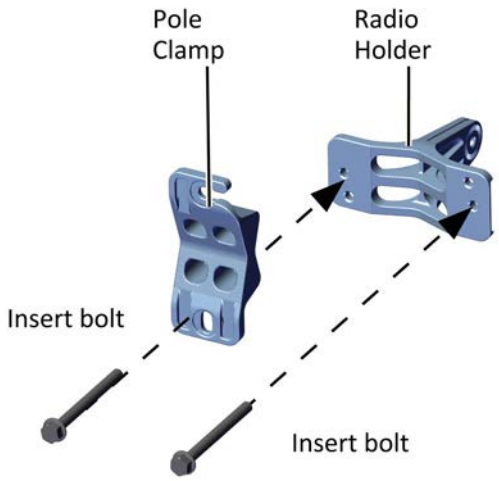

Figure 2-36: Connect Pole Clamp to Radio Holder

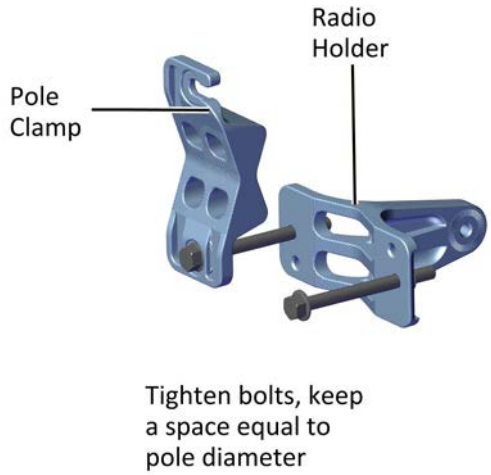

Figure 2-37: Tighten bolts

2. Place this “unit” on the pole where you want to mount the antenna. Once it is in place, rotate the pole clamp as shown, then tighten both bolts.

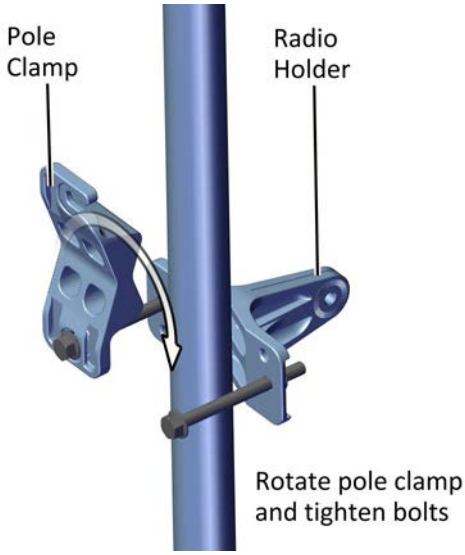

Figure 2-38: Rotate Clamp and tighten bolts

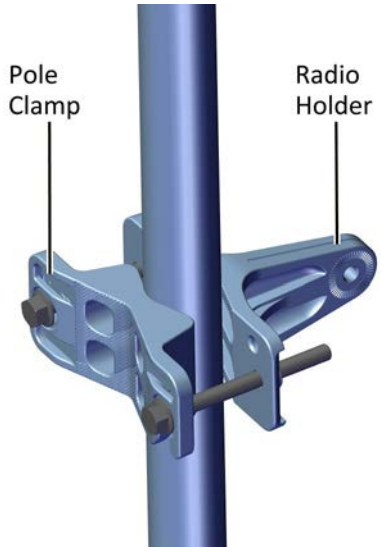

Figure 2-39: Mounting Kit on thin pole

Medium Pole

This method is for mounting the TBS antenna on a pole of pipe size 2 to 3.

3. Connect the pole clamp to the radio holder with the 8x90 bolts, but do not tighten the bolts all the way - tighten them so that they are not closer than a distance equal to the radius of the pole. You will then have one “unit” that you can take to

the location on the pole where you want to mount the antenna. (See Figure 2-36 to Figure 2-39 for mounting on a thin pole)

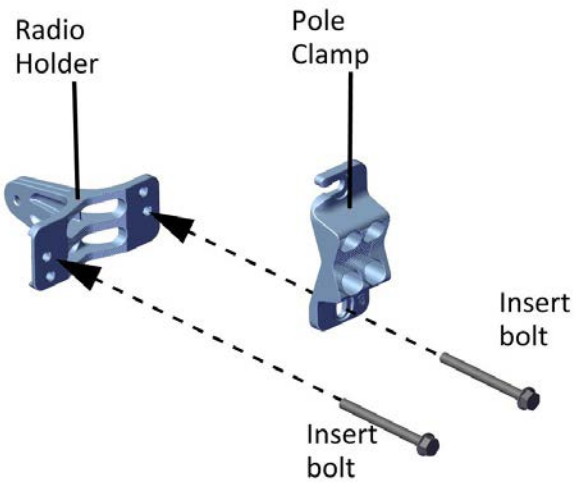

Figure 2-40: Connect Pole Clamp to Radio Holder

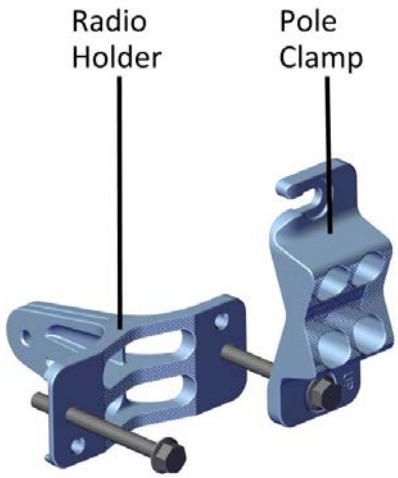

Figure 2-41: Tighten bolts

4. Place this "unit" on the pole where you want to mount the antenna. Once it is in place, rotate the pole clamp as shown, then tighten both bolts.

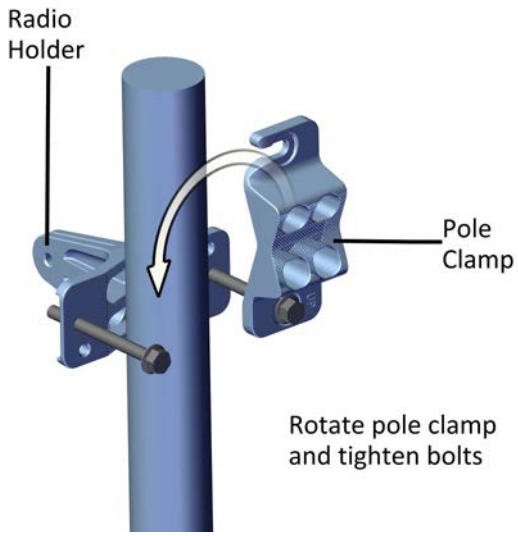

Figure 2-42: Rotate Clamp and tighten bolts

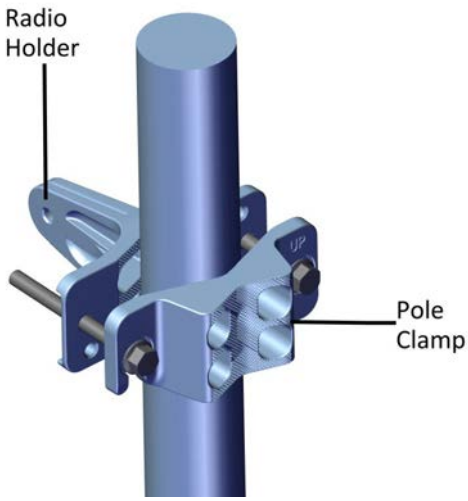

Figure 2-43: Mounting Kit on pole

Thick Pole

- This method is for mounting the TBS antenna on a pole of pipe size larger than 3.
- Use worm drive clamps (not supplied), threaded through the holes as shown. The pole clamp is not needed.

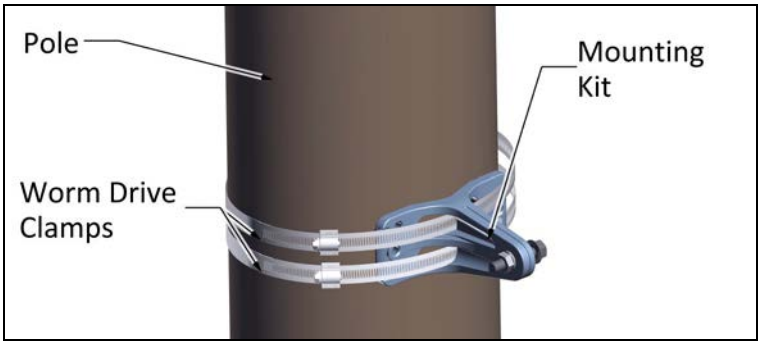

Figure 2-44: Mounting kit on a thick pole

TBS Antenna Mounting on a Horizontal Pole

When using the mounting kit on a horizontal pole, use the radio vertical adaptor, as shown:

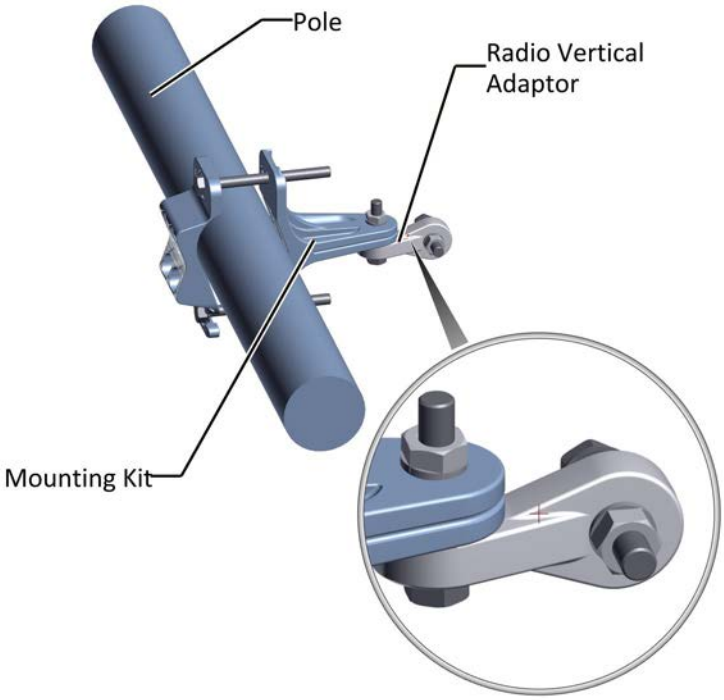

Figure 2-45: Mounting kit on a horizontal pole

TBS Antenna Mounting on a Wall

When using the mounting kit on a wall, the pole clamp is not necessary:

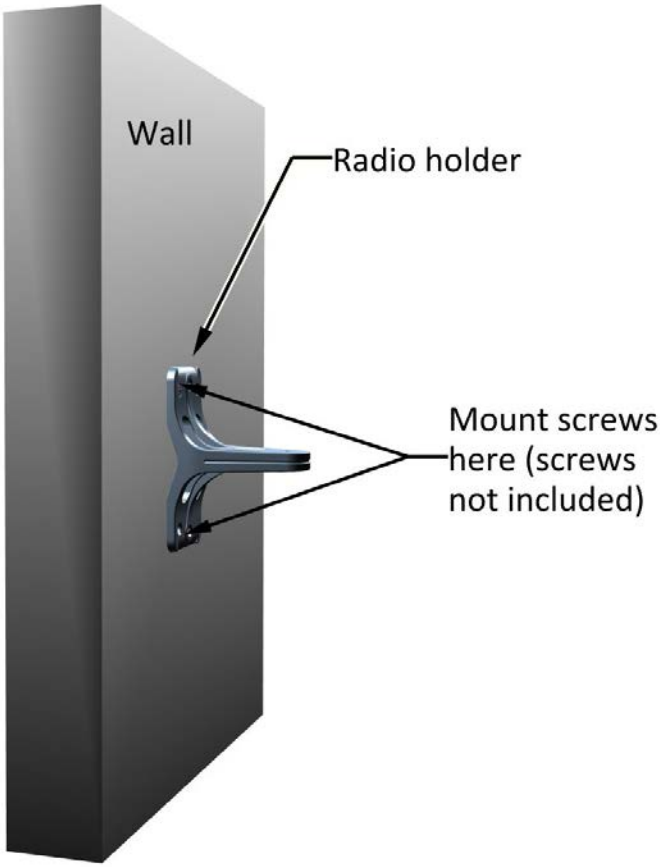

TBS Antenna Mounting Kit Adaptor

A flat panel antenna such as that shown in Figure 2-47 is typically used. It has four bolts for a mounting kit adapter. The mounting kit adaptor appears as shown in Figure 2-46:

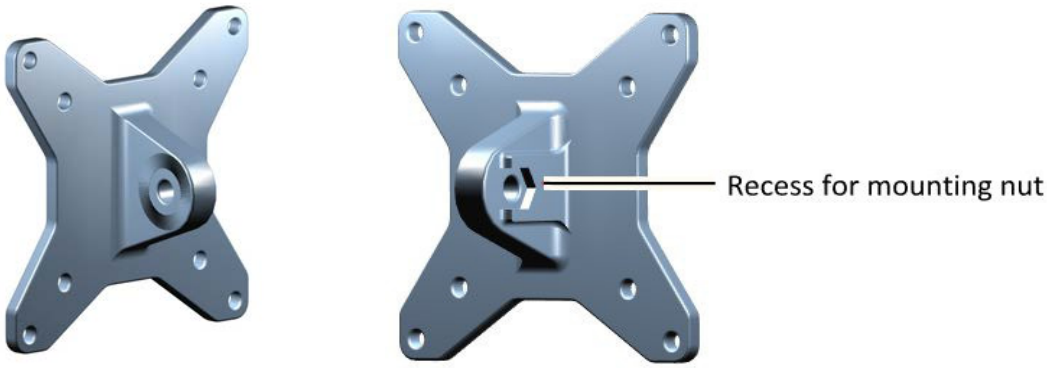

Figure 2-46: Flat panel antenna mounting kit adapter

Attach the mounting kit adaptor to the rear of the antenna as shown:

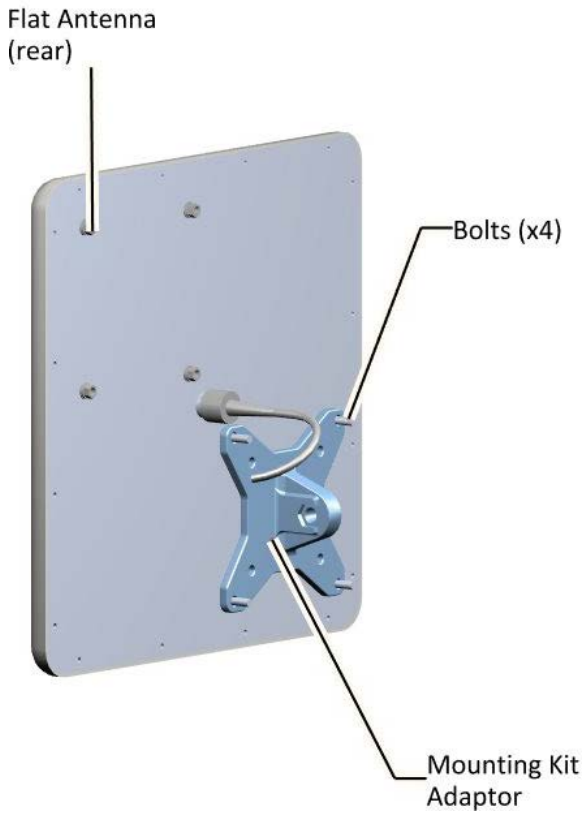

Figure 2-47: Flat Panel antenna - rear with mounting kit adapter

Figure 2-48 shows a mounted antenna. Attach the mounting bolt to the side of the adaptor with the recess, as shown.

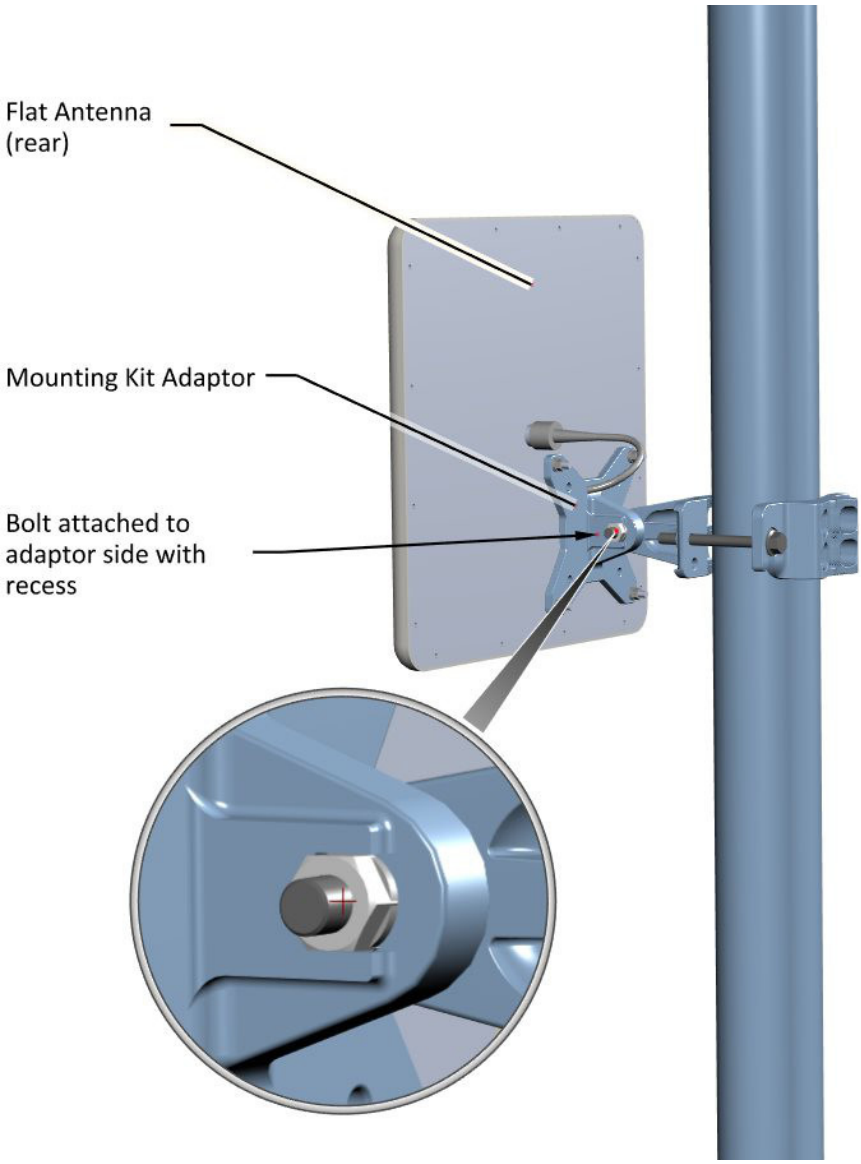

Figure 2-48: Flat Panel antenna - mounted on a pole

2.2.5 TBS External Connections

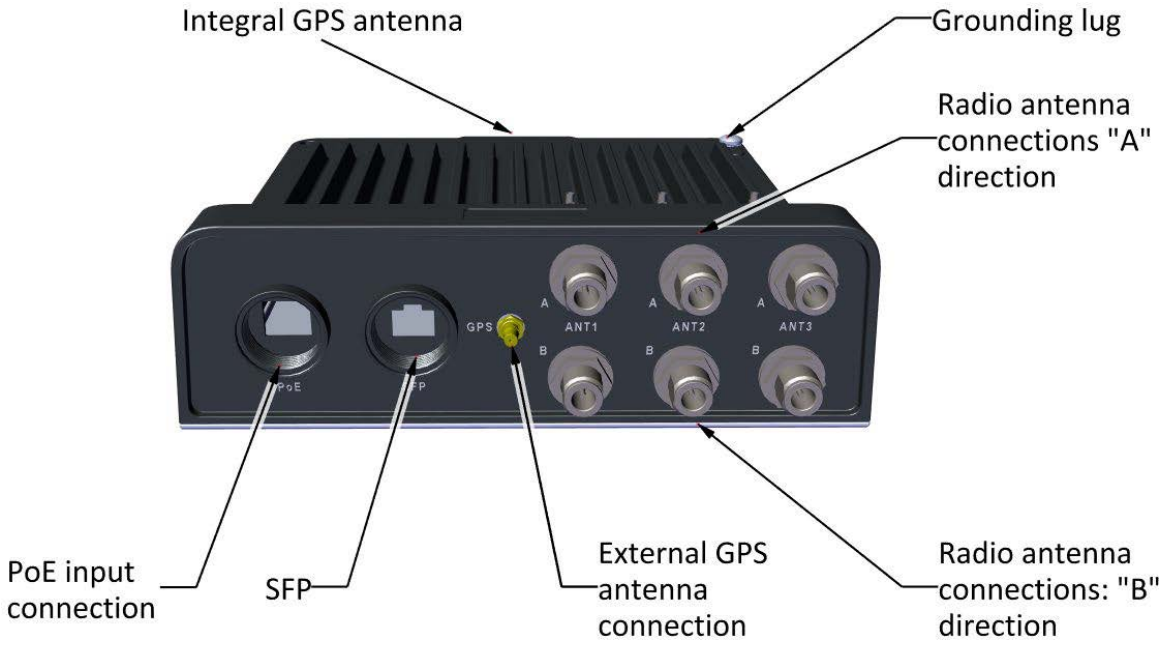

Figure 2-49: TBS external connections

2.2.6 Synchronization Units

Indoor Synchronization Unit (ISU)

The Indoor Synchronization Unit (ISU) provides a master synchronization clock for all TBS units, and is connected to one of the network switches.

It can be installed on a 19in. rack or on a convenient indoor surface.

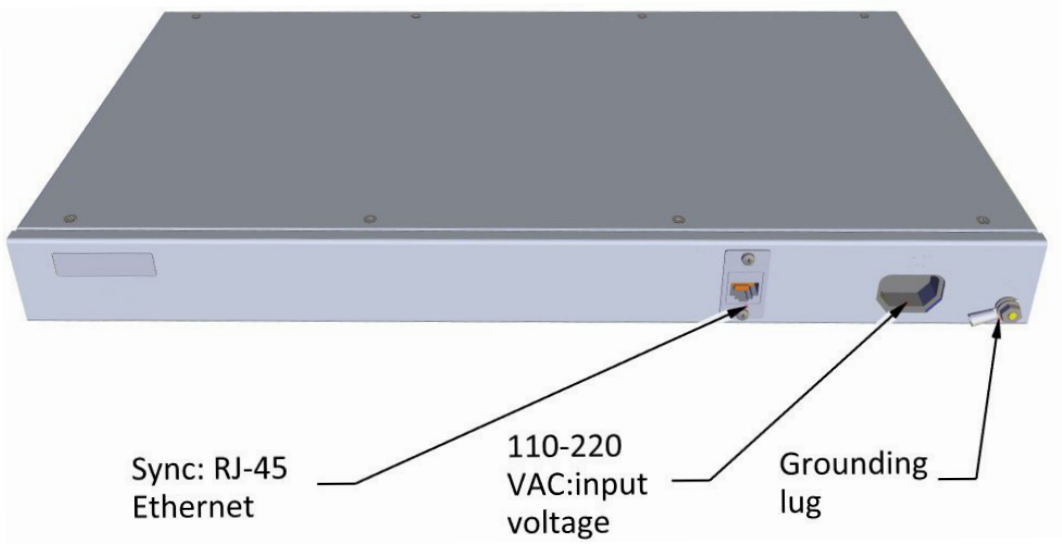

Figure 2-50: Indoor Synchronization Unit (ISU)

Outdoor Synchronization Unit (OSU)

The Outdoor Synchronization Unit (OSU) provides a master synchronization clock for all TBS units, and is connected to one of the network switches.

It is housed in the same housing as a TBS unit, and is installed in the same manner as a TBS (see TBS Mounting on page 2-4). It receives a GPS synchronization signal, and can use its integrated GPS antenna, or an external GPS antenna.

Figure 2-51: OSU external connections

show a OSU outside

show an OSU in a tunnel, with a wire going up through an air shaft to an external GPS antenna.

2.2.7 External GPS Antenna

The external GPS antenna is mounted on a vertical or horizontal pole segment. Figure 2-52 shows the GPS antenna. The antenna is seated in an inverted L plate with a hole for the antenna port. The L plate is strapped to the pole with a pair of worm drive clamps..

Figure 2-52: GPS antenna

2.2.8 Lightning Protection Unit (LPU)

The use of lightning protection is dependent on regulatory and end user requirements. Although FinM units have surge limiting circuits that minimize the risk of damage due to lightning strikes, RADWIN recommends the use of additional surge arrestor devices to protect the equipment from nearby lightning strikes.

Figure 2-53: Lightning Protection Unit (LPU)

For any type of indoor unit-outdoor unit connection, the LPUs are installed in pairs, as shown in Figure 2-54:

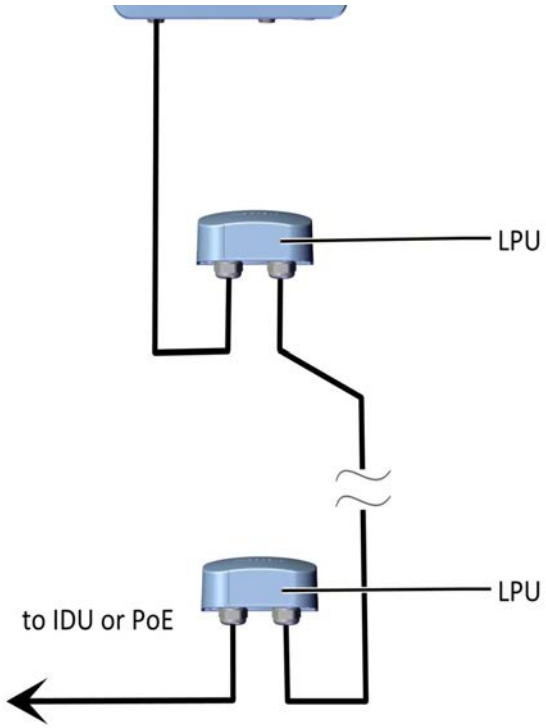

Figure 2-54: Basic use of lightning protector units

The LPU has two cable glands on the bottom for CAT-5e/6 cables, in addition to a grounding lug. There is an extra hole for a second screw when installed on a wall. On the side of the LPU is a slot for the metal tie when installed on a pole, as shown in Figure 2-55 and Figure 2-56:

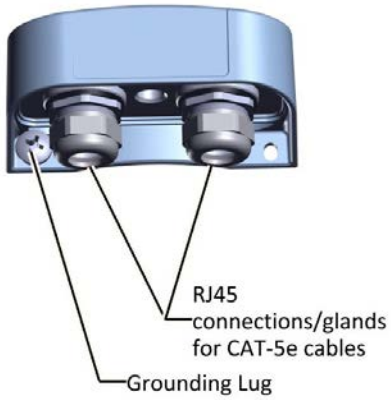

Figure 2-55: LPU: Bottom View

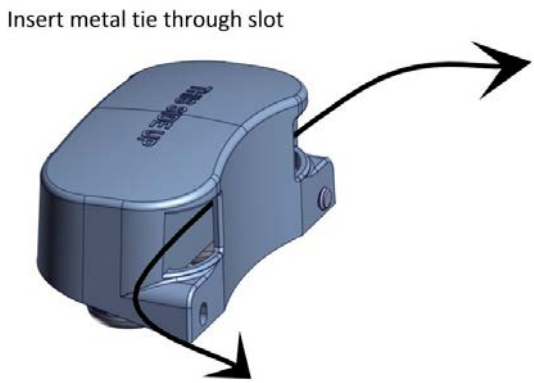

Figure 2-56: LPU: Side View

To install an LPU on a pole:

1. Choose a location as close as possible to the radio unit.
2. Insert the metal tie through the slots as shown in Figure 2-56. Make sure the LPU is oriented in the correct direction, as shown in Figure 2-57.

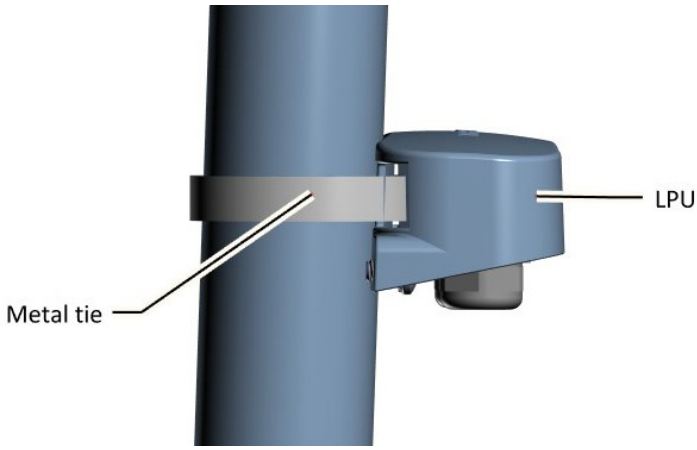

Figure 2-57: LPU attached to pole with metal tie

3. Tighten the metal tie.
4. Connect the grounding lug to a grounding source.
5. Remove the cable glands.
6. Thread the CAT-5e/6 cables through the cable glands, and connect the cables to the LPU as shown in Figure 2-58.

7. Tighten the cable glands around the CAT-5e cables as shown in Figure 2-59.

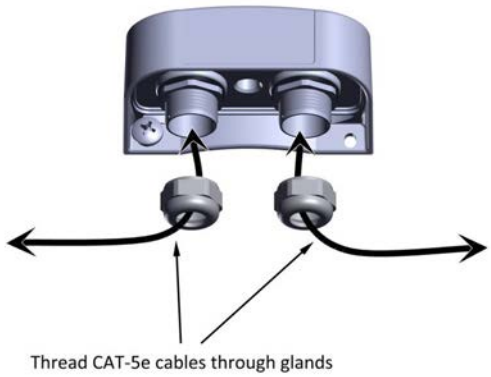

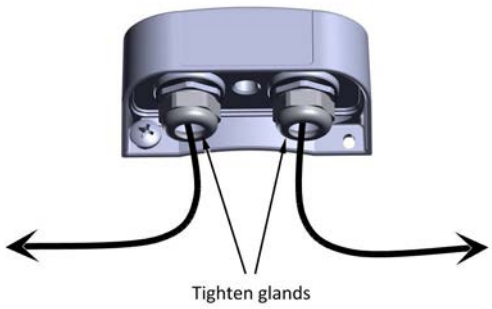

Figure 2-58: Connecting cables to the LPU (1) *Figure 2-59: Connecting cables to the LPU (2)*

8. Route one CAT-5e/6 up to the radio, and the other down to the IDU or PoE (via the lower LPU). An LPU installed on a pole is shown in Figure 2-60.
9. RADWIN recommends that you add extra waterproofing to the connections (see *see "Waterproofing" on page 2-31.*).

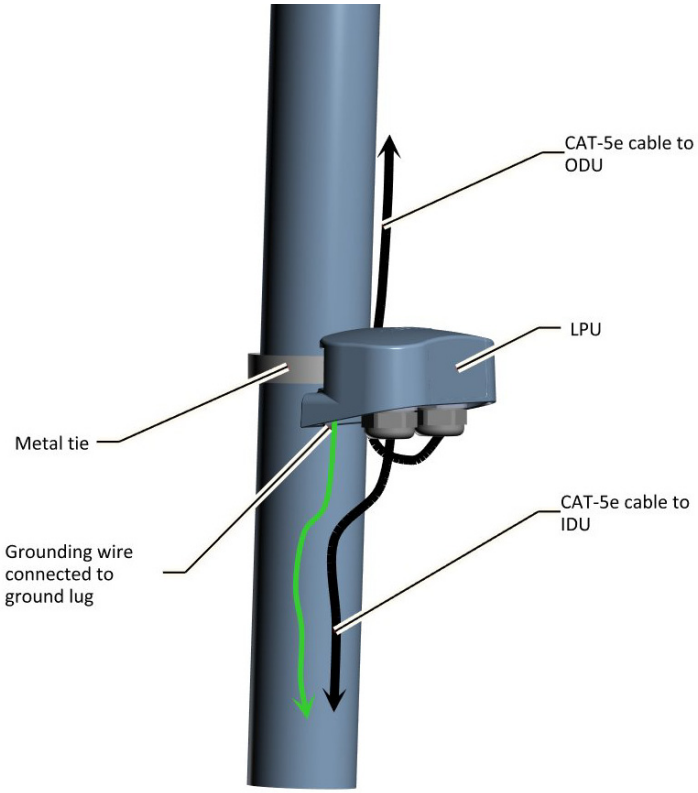

Figure 2-60: Installing an LPU on a pole (side view)

➢ **To install an LPU on a wall:**

1. Remove the grounding lug.

2. Attach the LPU to the wall using wood or masonry screws (not included), via the holes as shown in Figure 2-61.
3. Connect the left screw (where the grounding lug was located) to a ground source.
4. Remove the cable glands.
5. Thread the CAT-5e/6 cables through the cable glands, and connect the cables to the LPU as shown in Figure 2-58.
6. Tighten the cable glands around the CAT-5e/6 cables as shown in Figure 2-59.
7. Route one CAT-5e up to the radio (via the upper LPU), and the other to the IDU or PoE.
8. RADWIN recommends that you add extra waterproofing to the connections (see *see Waterproofing* on page 2-31).

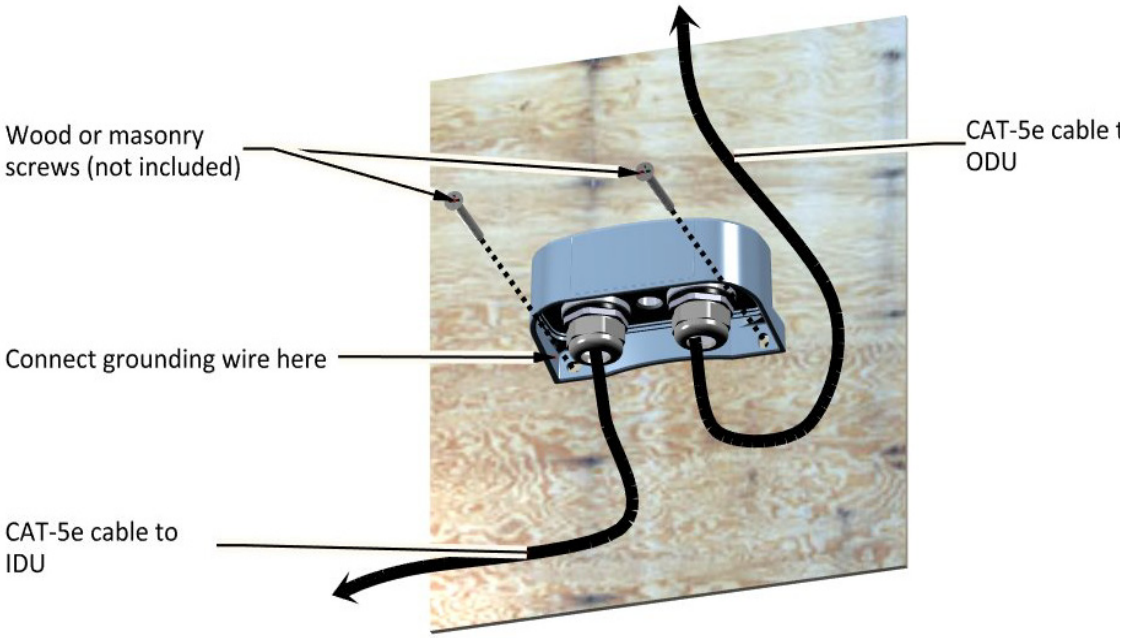

Figure 2-61: Installing an LPU on a wall

2.2.9 Waterproofing

Protect all connections between any outdoor devices and cables from rain, dust, moisture and salt according to the procedure below:

1. Use a high quality sealing material such as Scotch 23 Tape ¾” wide, to ensure IP-67 compliant protection against water and dust.
2. Cut two pieces each 25 cm long, of Scotch 23 splicing tape. Remove the plastic cover to expose the tacky side of the sealing tape as shown in Figure 2-62.

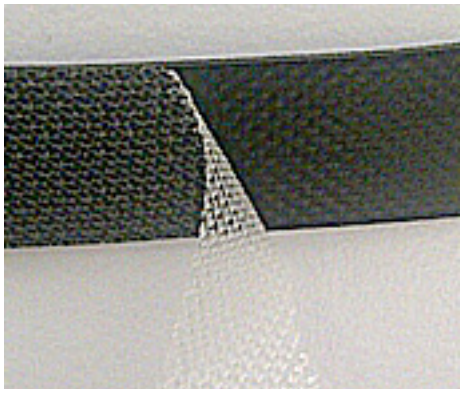

Figure 2-62: Exposing the tacky side of the sealing tape

3. After connecting a cable to a unit, tighten the cable gland cap firmly and use the insulation tape to fully cover the cable gland.

Figure 2-63: Waterproofing an external connection

2.2.10 On-Surface vs. Skyline / Elevated Train

TBS

- Height
- Power

RADWIN PoE

- PoE 3rd Switches
- Connectors

Antennas

- 2X2
  - Type

  - Spacing
  - Alignment
- 3X3
  - Type
  - Spacing
  - Alignment

Synchronization

- GSU (part of the TBS)
-

2.3 Track Side - Below Ground

Show mainly the differences between above and below ground:

2.3.1 TBS

Mounting Kit
Connectors

2.3.2 Antennas

2X2

- Type
- Spacing
- Alignment

3X3

- Type
- Spacing
- Alignment

2.3.3 Synchronization

ISU
GPS

2.4 Track Side - Combined Above and Below Ground Route

Synchronization

ISU
GPS
Combined GPS and ISU synchronization

2.5 On-board

2.5.1 Overview

The Fiber in Motion solution uses shark fin antennas for its mobile units, and relies on antenna orientation to differentiate the radio streams enough so as to enable MIMO.

General Guidelines

- Locate the antennas on the roof of the locomotive, as close as possible to the front/back end.
- Place the TMU as close as possible to the antennas.

Power

- Use the PoE to supply power to the TMU
- Use the PoE or the SFP fiber connection to provide a service connection to the TMU.

General Mounting Arrangement

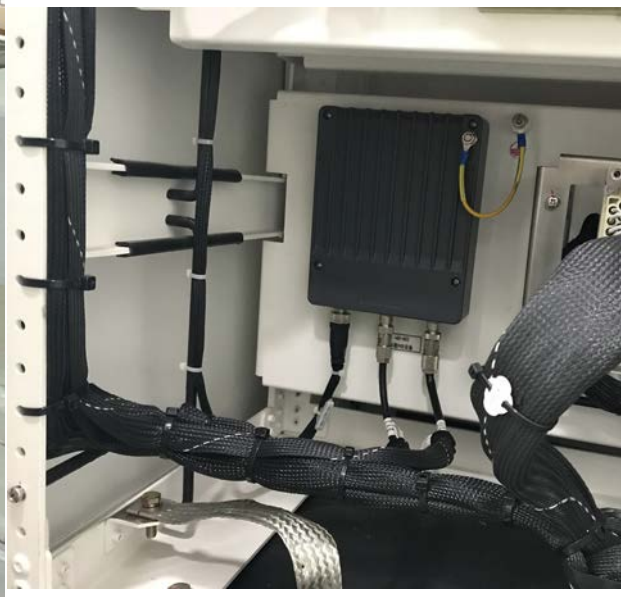

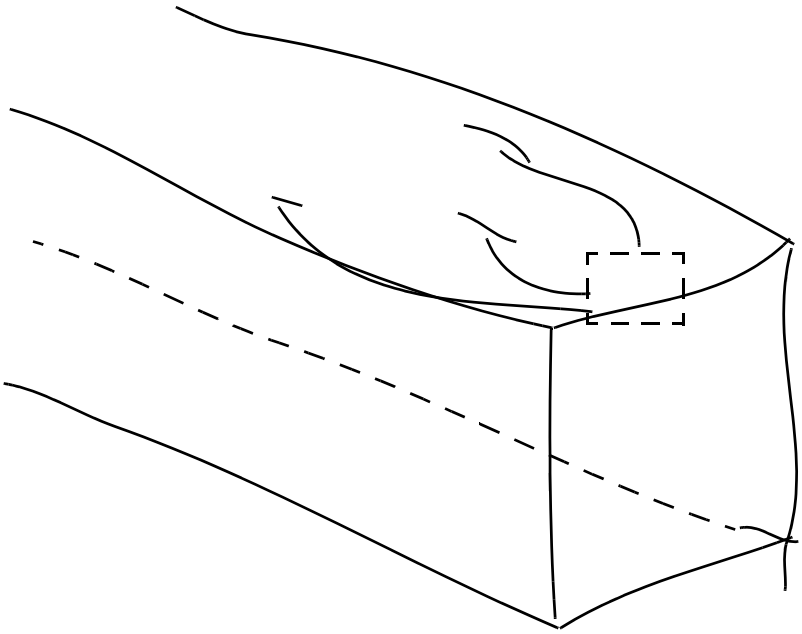

The TMU can be mounted on a shelf or a wall.

2.5.2 General Set-Up of TMUs and Antennas

2.5.3 TMU Mounting

The TMU can be mounted in a 19 in rack, on a shelf, or on a wall. When mounting on a 19 in rack, use the specially-designed TMU-PoE drawer.

TMU mounting on a shelf

The TMU can be placed in any convenient horizontal surface, such as a shelf. Fasten the unit and its PoE properly.

Figure 2-64: TMU mounted on a shelf

TMU mounting on a wall

The TMU can be mounted an a wall with proper support. Use the mounting holes and customer-supplied screws to fasten the unit to a wall. Make sure you locate its PoE close to the unit, and fasten it properly as well.

TMU mounting using the TMU-PoE drawer

The TMU-PoE drawer is used to mount both the TMU and the PoE together. Carry out the following steps to mount both units:

1. Choose a site for the TMU-PoE drawer as close as possible to the on-board antennas and on-board power supply. Make sure there is at least 12 cm/5 in of rack space.
2. Open the package, remove the TMU-PoE drawer from the packing styrofoam, and cut and discard the two black straps holding the mounting slides in place.
3. Check the contents:

Table 2-3: TMU-PoE drawer package contents

Item No.	Description	Quantity
1	Tray	1
2	DC-TMU Jumper cable	1
3	Allen wrench (M4)	1
4	Allen screws (M4x22)	8
5	Spring washers for Allen screws	8
6	DIN screws (M5x16)	12
7	Black finishing washers for M5 screws	12
8	Mechanical cage/nuts for M5 screws	12

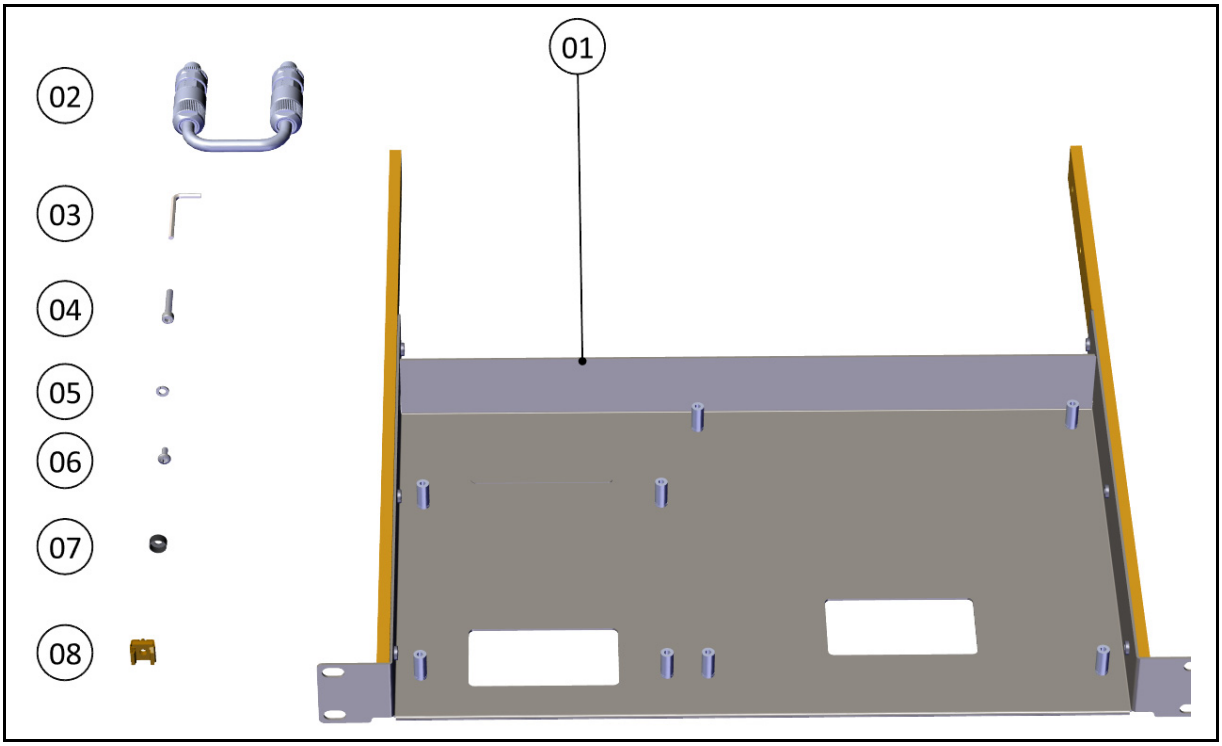

Figure 2-65: TMU-PoE drawer contents

4. Detach the mounting slides from the TMU-PoE drawer: Pull each slide out until it is stopped by the locking lever. Press the locking lever to release the slide, and pull slide out completely.

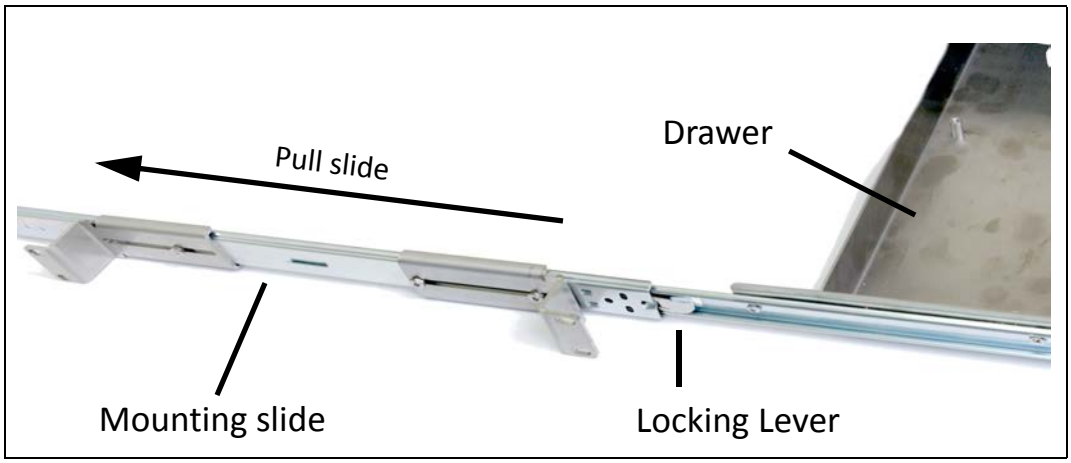

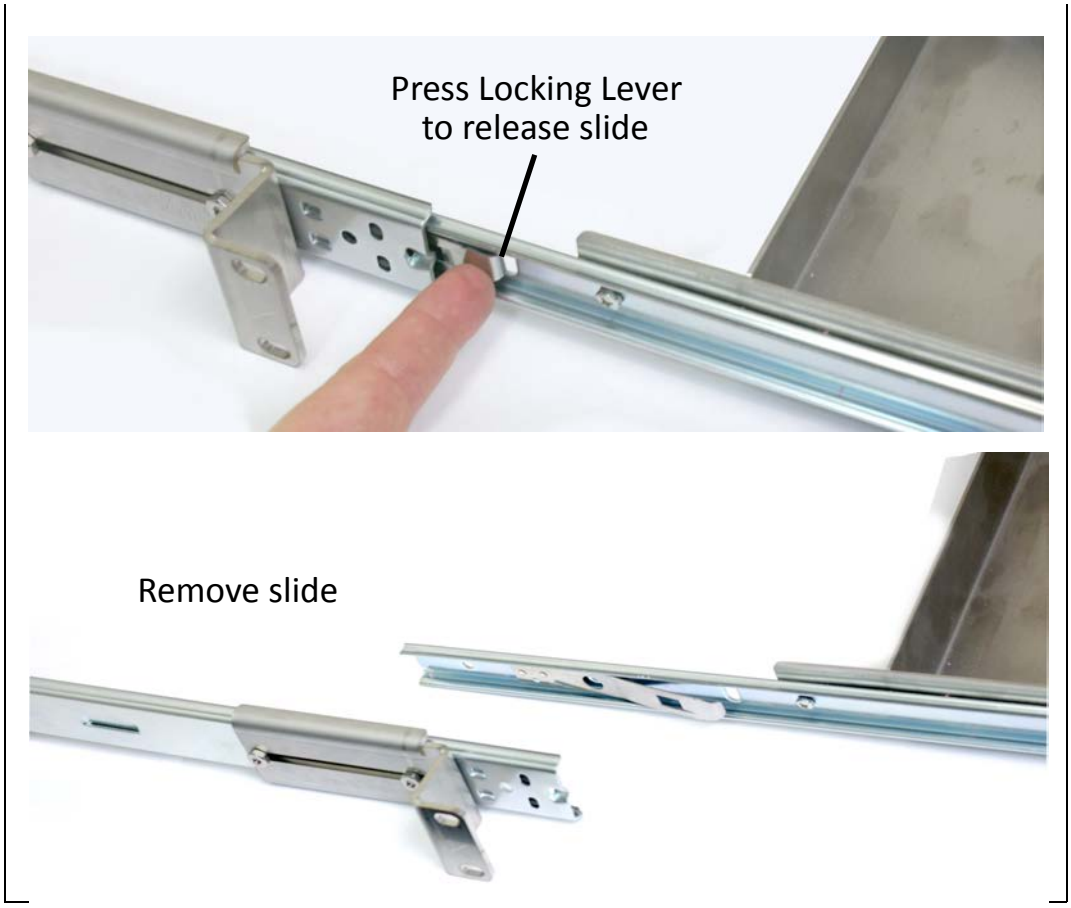

Figure 2-66: Remove the mounting slides from the TMU-PoE drawer.

5. Measure the distance between vertical rails of the rack.

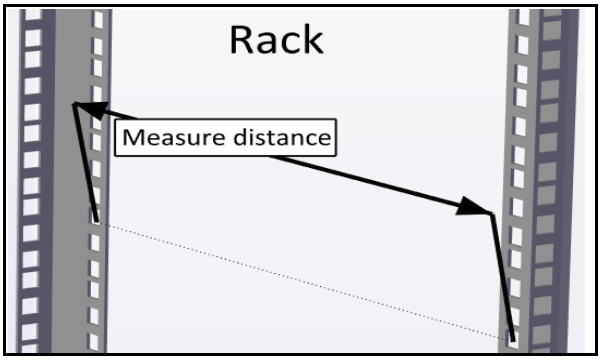

Figure 2-67: Measure distance between vertical rails

6. Adjust the location of the rear mounting flange of the first mounting slide so that the distance between the holes of the mounting flanges are the same as the distance you measured in the previous step.

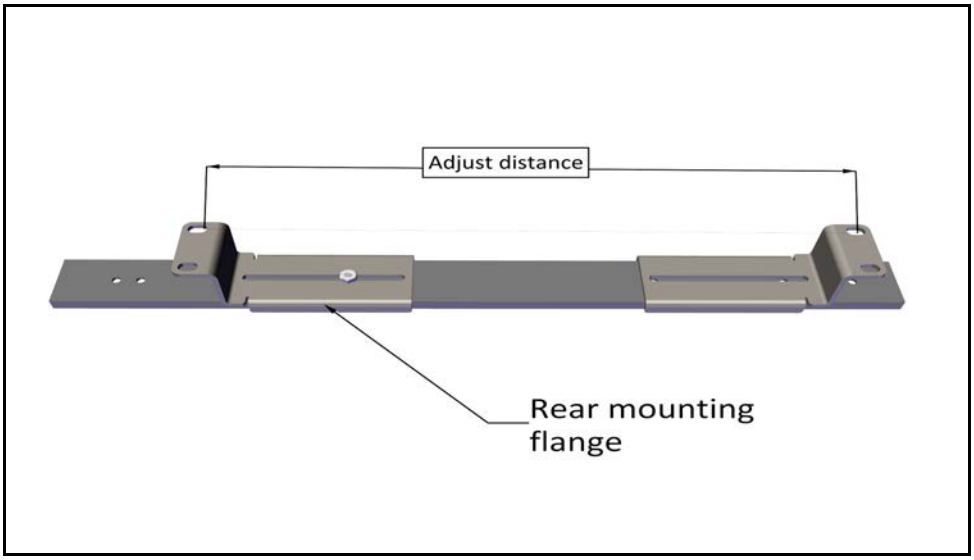

Figure 2-68: Adjust distance of rear mounting flange

7. Place the second slide next to the first and adjust its rear mounting flange so that the distance between the flanges are the same as that of the first slide.

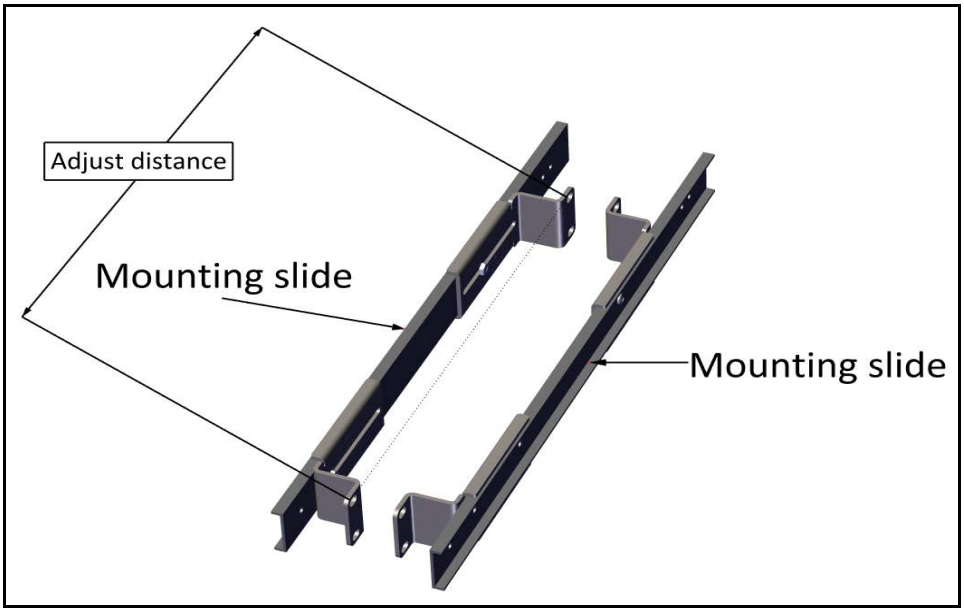

Figure 2-69: Adjust distance of mounting flange on second slide

8. Insert 8 mechanical cage nuts in the appropriate holes in the 19 in rack: 4 on each side of the rack.

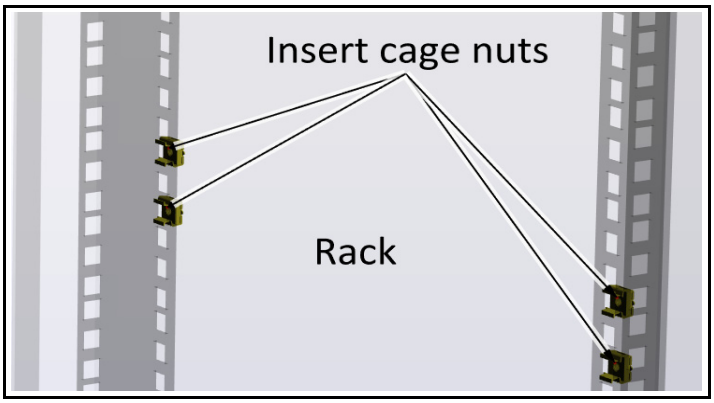

Figure 2-70: Inserting cage nuts (one side shown)

9. Place each mounting slide with the stopping flap towards the rear of the rack, and using the Philips screws with the black washers, fasten the mounting slides to the cage nuts and tighten.

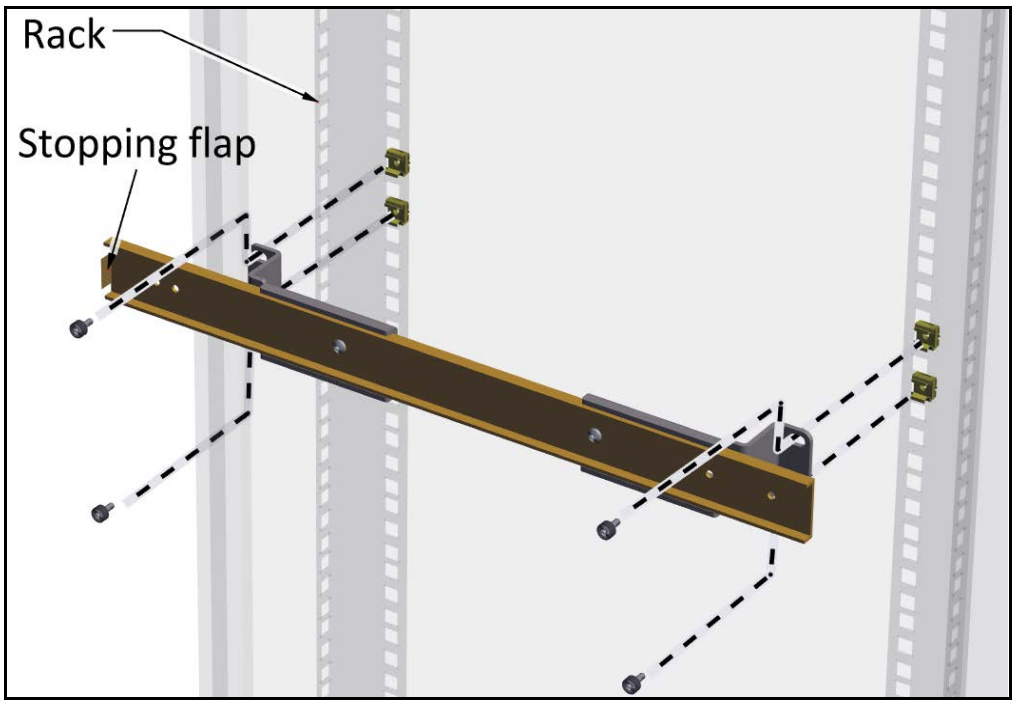

Figure 2-71: Placing and fastening mounting slide

10. Once both mounting slides are fastened tightly on the rack, insert the drawer as follows:
    a. Place the framework arms of the drawer into the mounting slides carefully. Make sure they are straight.
    b. Push back the drawer until the framework arms touch the ball-bearing grey housing.
    c. While pressing outwards on both ball-bearing grey housings, push the drawer in further until the framework arms engage the ball-bearing housings.
    d. Further push the drawer until the locking lever stops it.
    e. Release the locking levers, and push the drawer in all the way, even through some resistance towards the end.

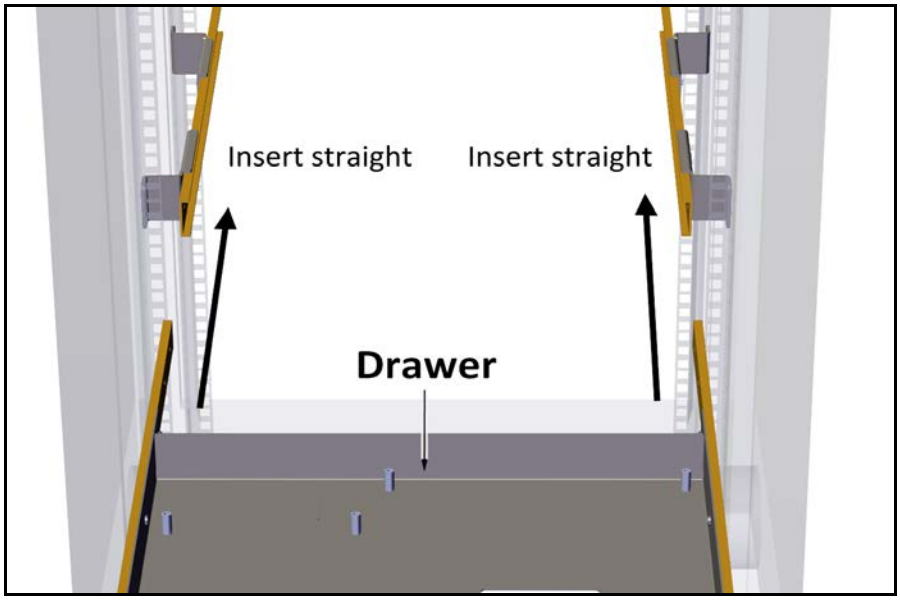

Figure 2-72: Inserting the drawer: Place arms straight

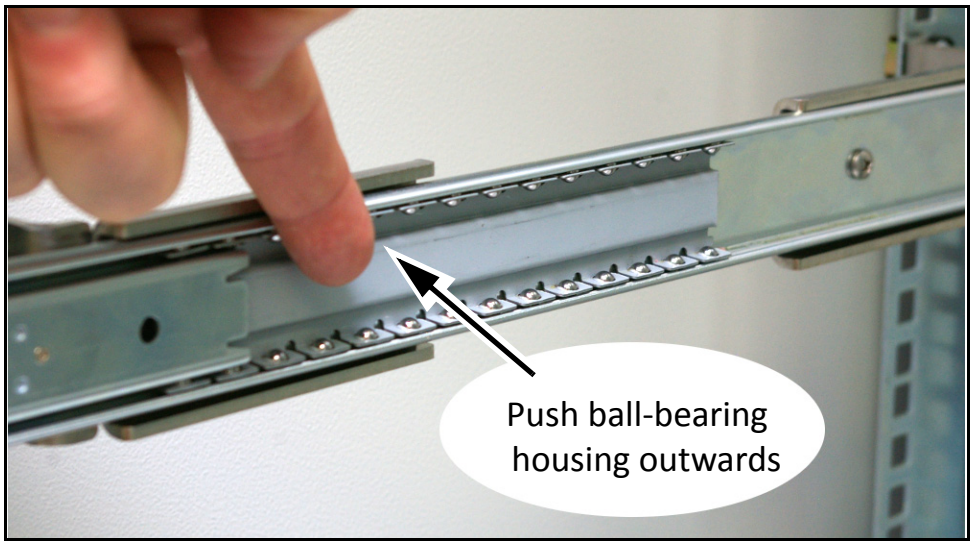

Figure 2-73: Inserting the drawer: Push ball-bearing housings outwards

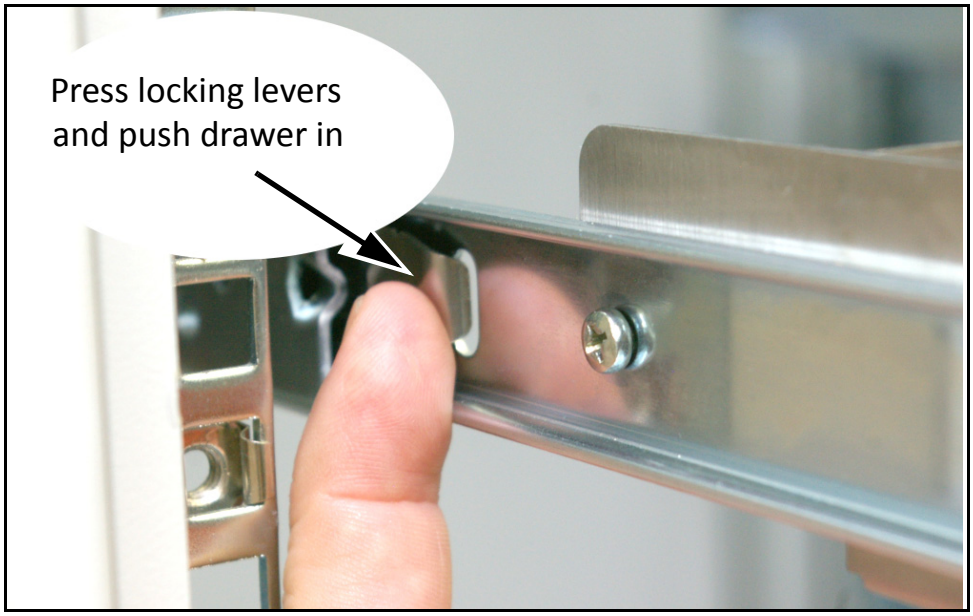

Figure 2-74: Inserting the drawer: Release locking levers

11. Insert the other 4 cage nuts in the appropriate holes in the front side of the vertical rails.
12. Using the other 4 Philips screws with the black washers, secure the drawer to the front side of the vertical rails of the rack.

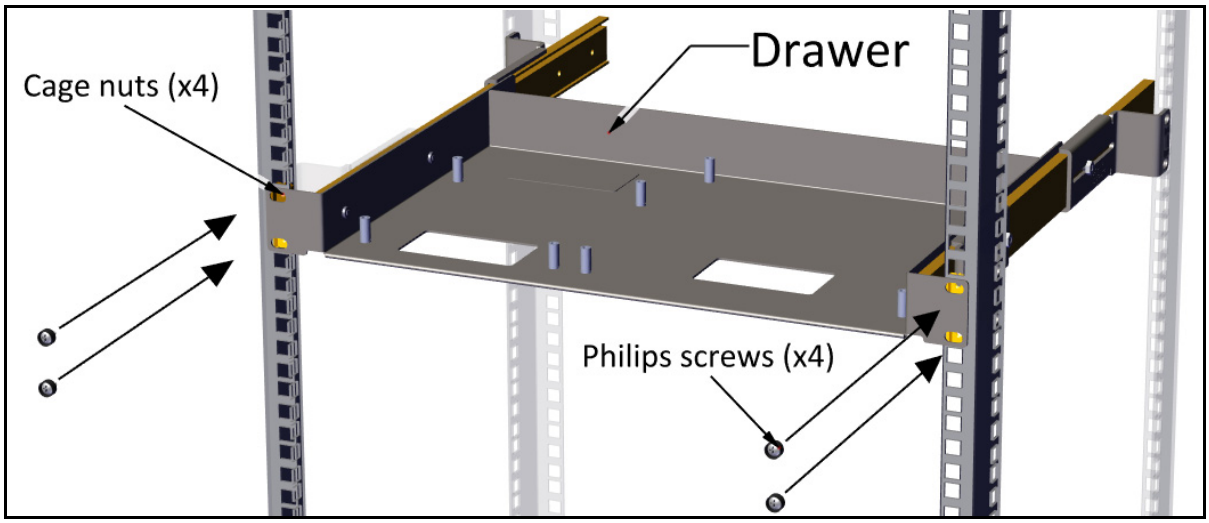

Figure 2-75: Secure drawer to the front side of rack

13.Attach PoE and TMU to drawer as follows:

a. Remove grounding lugs from both units (they interfere with the drawer and are not needed for a drawer installation).

b. Place PoE over the pins of the left side of the drawer as shown, and attach using allen screws.

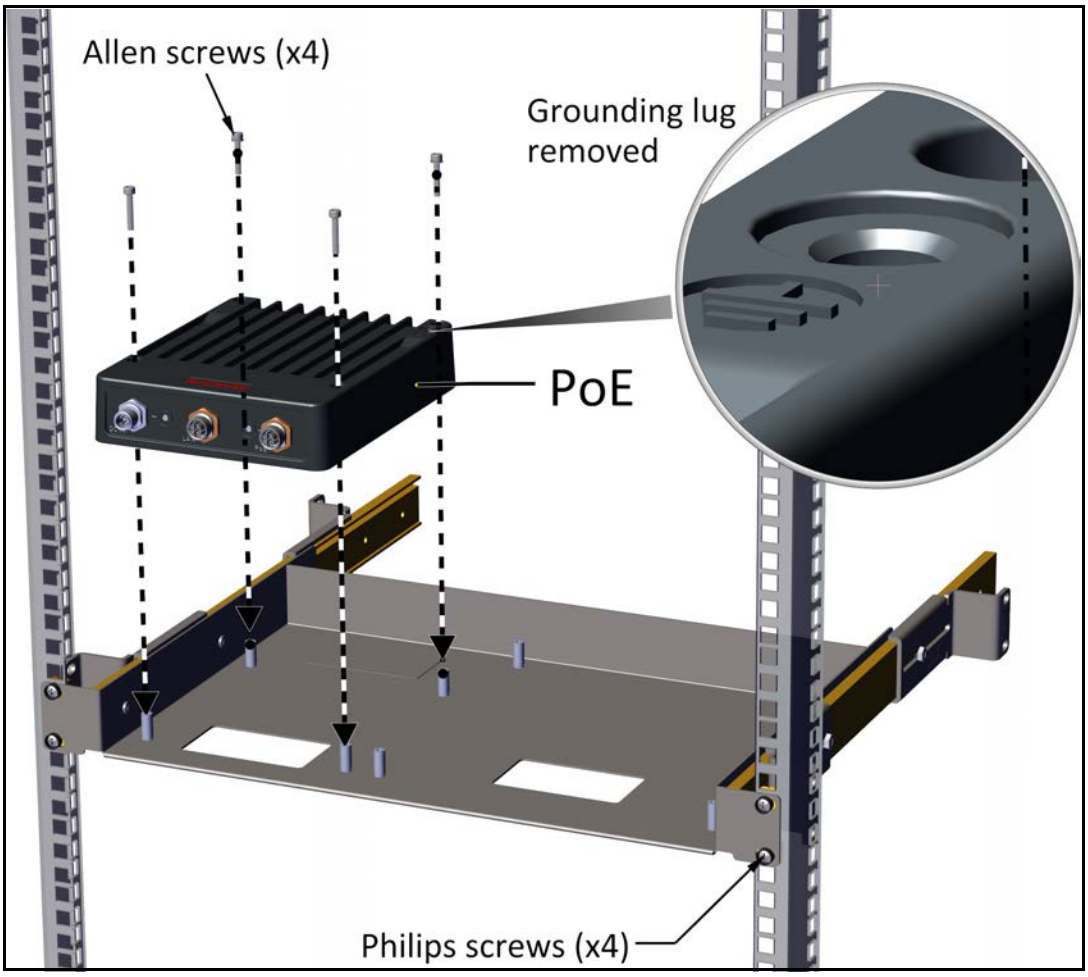

Figure 2-76: Attaching PoE to drawer

c. Place TMU over the pins on the right side of the drawer as shown, and attach using allen screws.

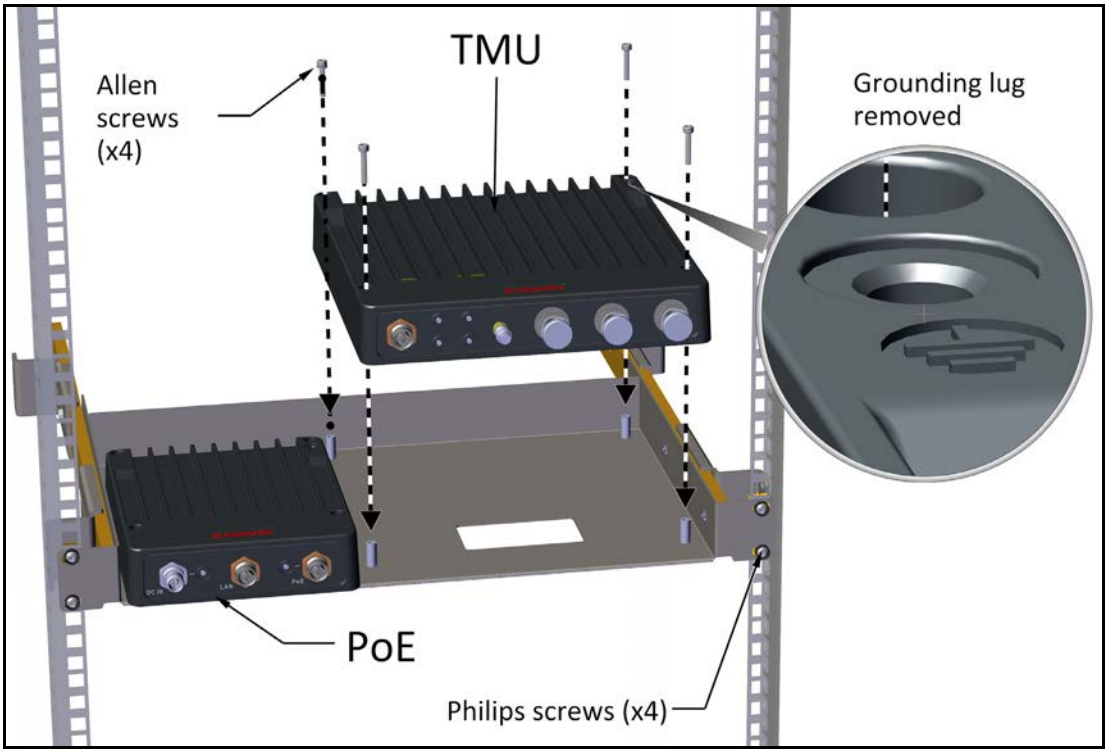

Figure 2-77: Attaching TMU to drawer

Caution

The TMU and PoE, when mounted in the TMU-PoE drawer, are grounded via the mounting pins, through the 19 in rack.
Make sure the rack you are using is grounded properly.

2.5.4 PoE Devices for the TMU

The DC PoE device is always mounted next to the TMU.

The units can be mounted in a 19 in rack, a shelf, or on a wal.

Mounting with the TMU-PoE drawer

The TMU-PoE drawer is used to mount both the TMU and the PoE. Follow the instructions in “Mounting on a wall” on page 2-45.

Mounting on a DIN rack

The PoE can be mounted on a DIN rack. Carry out the following steps to mount the PoE on a DIN rack:

Figure 2-78: Attaching a DIN rack holder to the PoE

Figure 2-79: Attaching a PoE to a DIN rack

2.5.5 TMU Antennas

Each TMU **needs** three "Shark-Fin" roof antennas mounted on the roof of the locomotive as close as possible to the TMU:

Figure 2-80: "Shark-Fin" antenna - bottom view

Whatever mounting arrangement is adopted:

- The antennas should be mounted as close to the TMU as possible.
- Try to minimize obstructions between the antennas and the front of the train such as air-conditioner units, electronic route number display boxes and the like.

- Mount Antenna 1 and Antenna 2 on the edge of the locomotive at a 45° angle, as shown in Figure 2-81.
- Mount Antenna 3 (center) at a 90° angle (directly up) and one third of the distance between the right and left antennas as shown in Figure 2-81.
- Connect the antenna ports of the TMU to the antennas as shown in Figure 2-82.

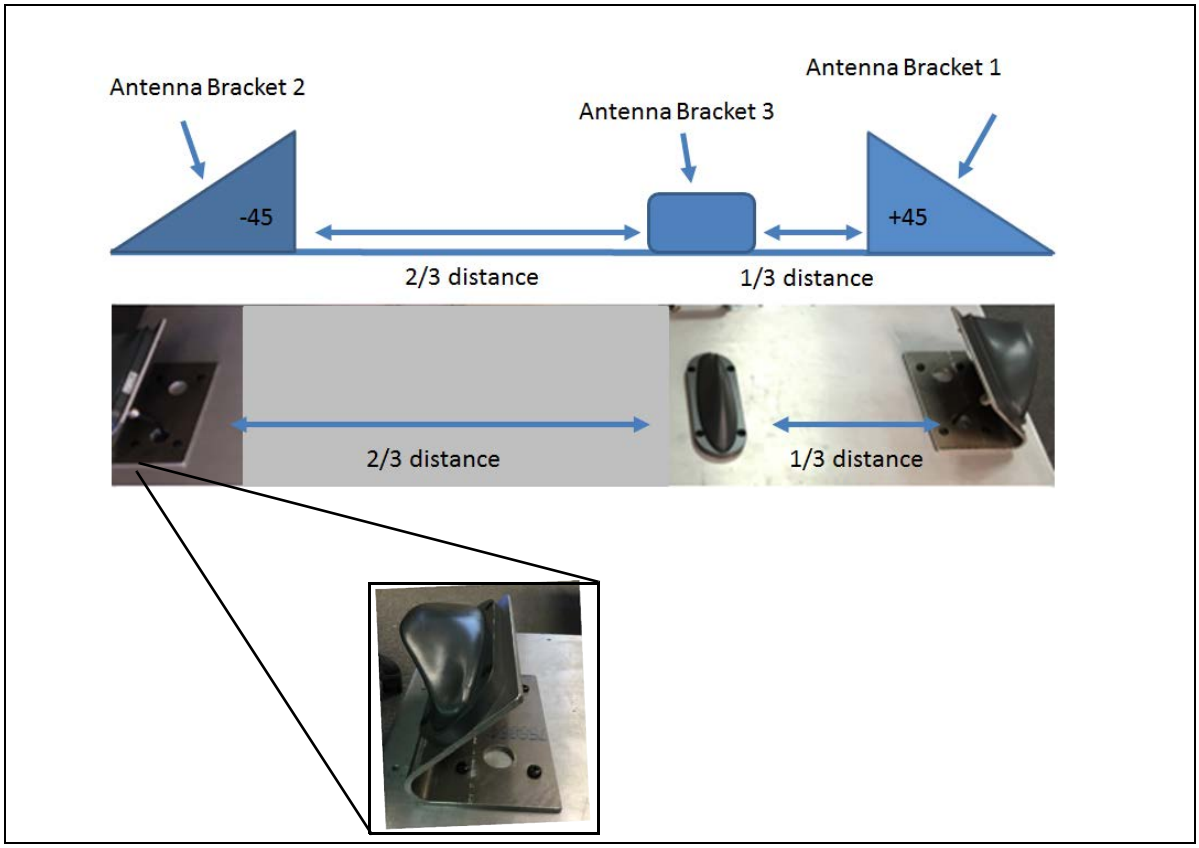

Figure 2-81: TMU antenna mounting configuration on roof

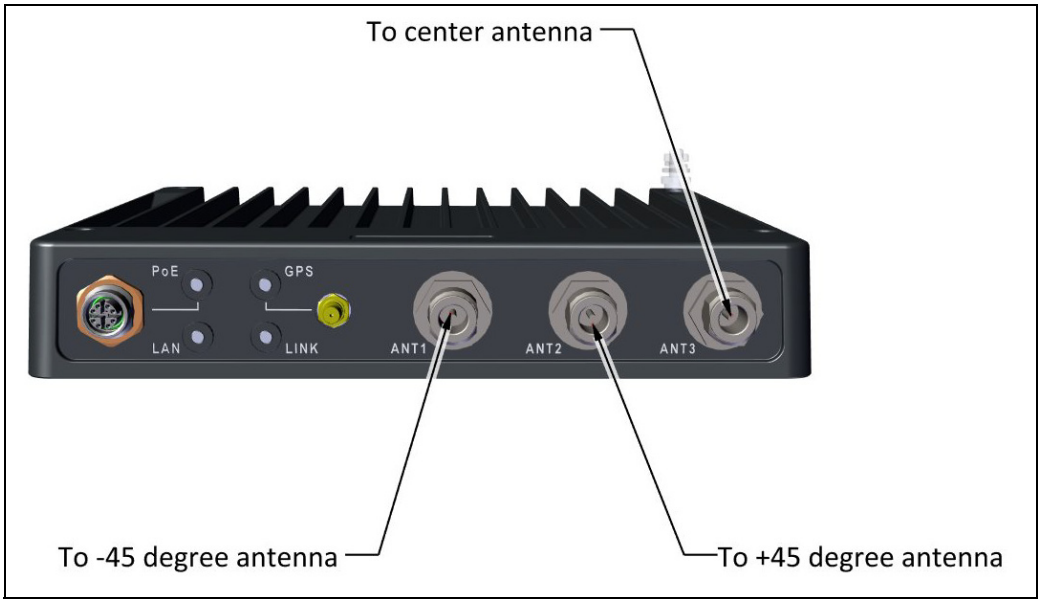

Figure 2-82: TMU antenna port connection scheme

4. Connect the RF cable as shown below:

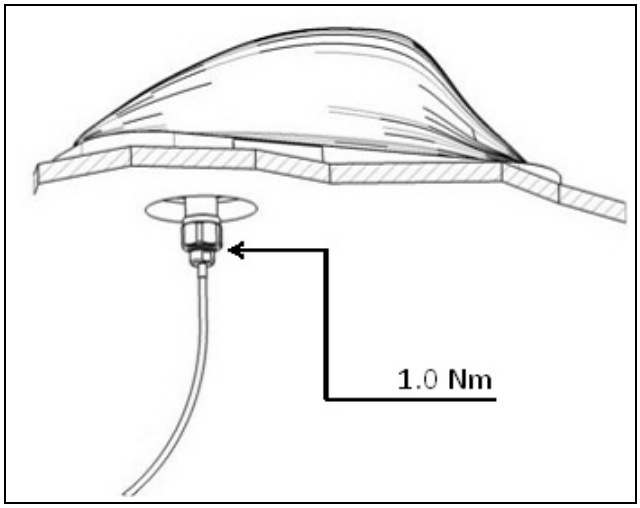

2.5.6 TMU External Connections

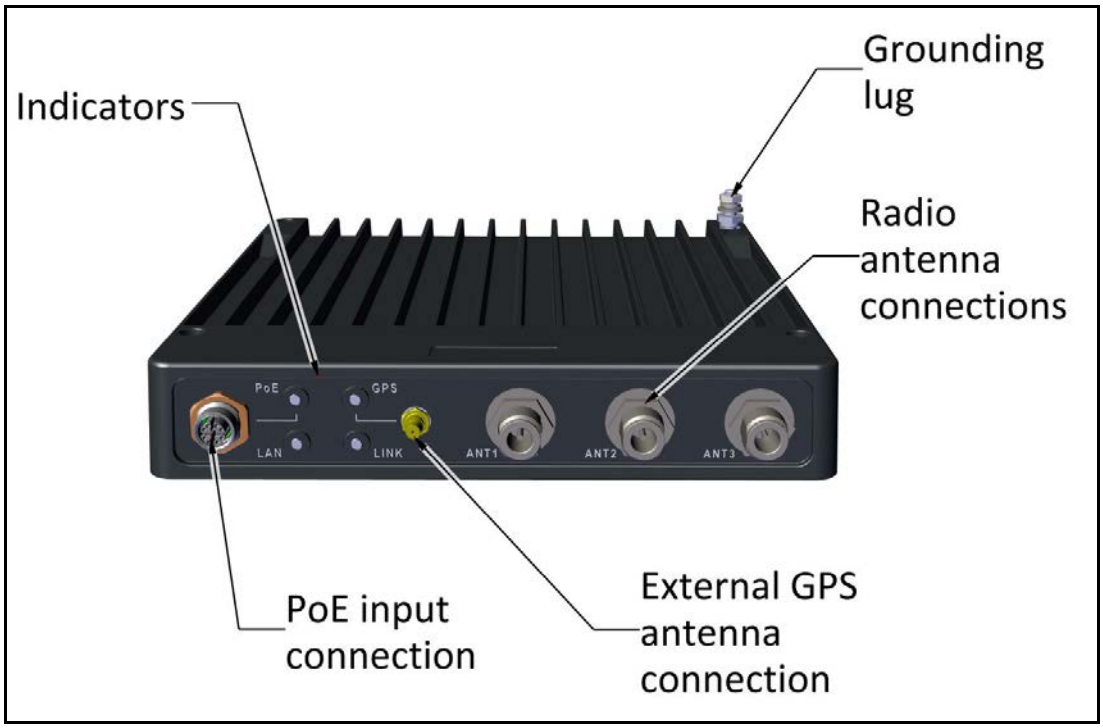

Figure 2-83: TMU - External Connections

2.6 Grounding

All RADWIN products should be grounded during operation. In addition:

- All units should be grounded by a wire with diameter of at least **10 AWG**.

  Units must be properly grounded to a Protective Ground in accordance with the Local Electrical Regulations
- Rack-mounted equipment should be mounted only in grounded racks and cabinets.

Further, you should -

- Always make the ground connection first and disconnect it last
- Never connect telecommunication cables to ungrounded equipment
- Ensure that all other cables are disconnected before disconnecting the ground

TBS and OSU

There is a grounding lug on the TBS and OSU as shown in Figure 2-84. Ground it using 10 AWG wire.

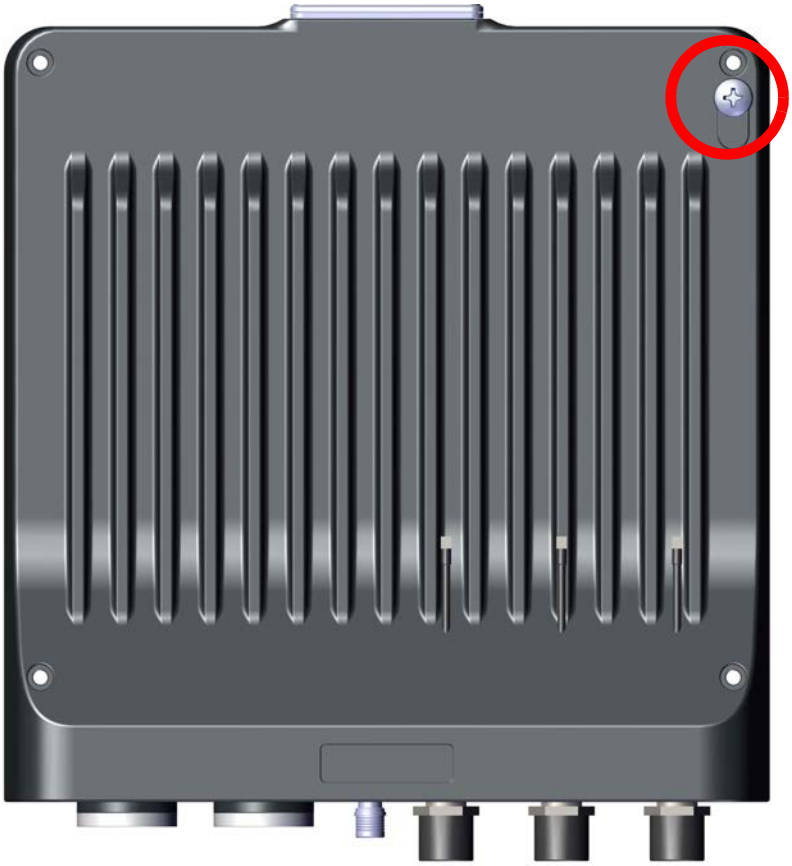

Figure 2-84: TBS/OSU: Grounding lug location

TMU

The grounding lug for the TMU is shown in Figure 2-85. Ground it using 10 AWG wire.

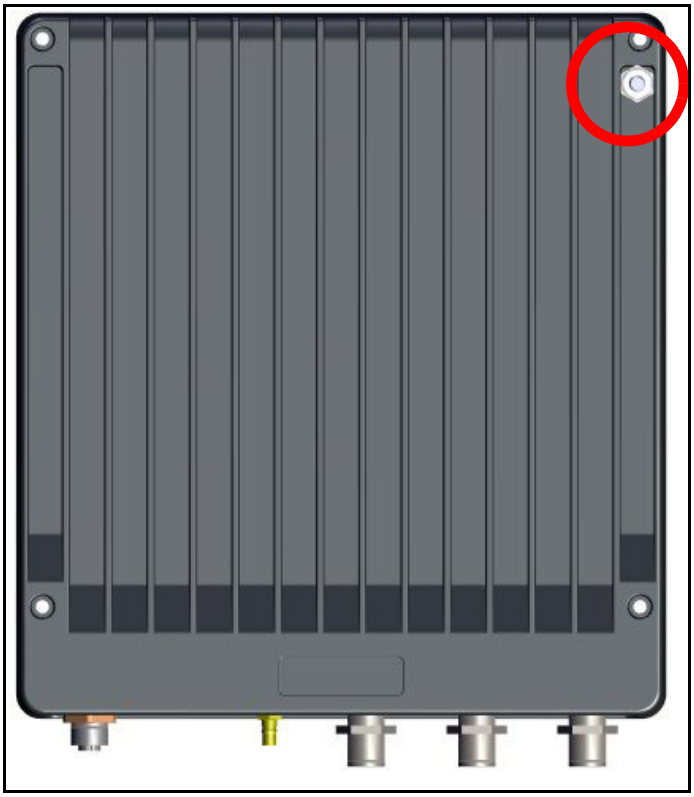

Figure 2-85: TMU: Grounding lug location

When mounted in a 19 in rack, the TMU is grounded via the rack.

FinM PoE

There is a grounding lug on the FinM PoE as shown in Figure 2-86. Ground it using 10 AWG wire.

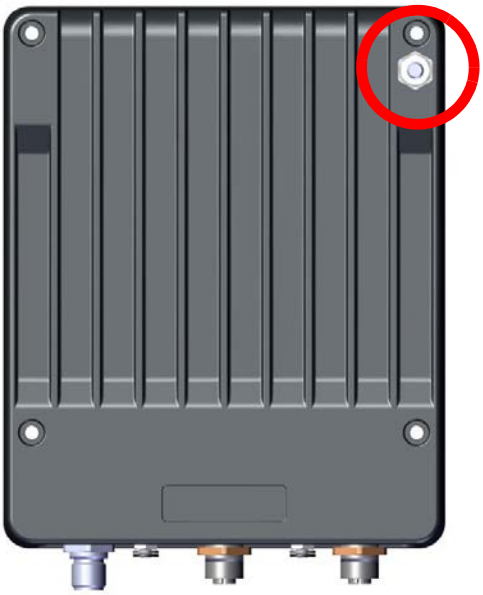

Figure 2-86: PoE: Grounding lug location

When mounted in a 19in rack, the PoE is grounded via the rack.

External PoE

There is a grounding lug on the external PoE as shown in Figure 2-87. Ground it using 10 AWG wire.

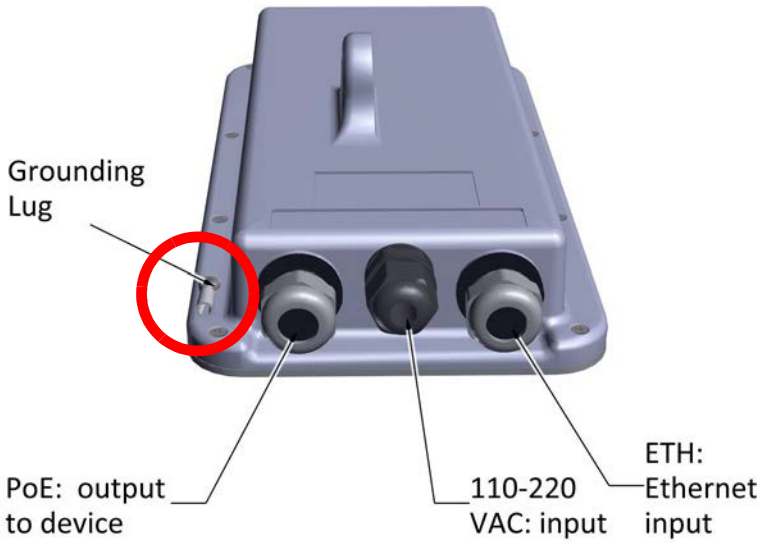

Figure 2-87: PoE: Grounding lug location

ISU

The ISU is grounded via its ground connection on its front panel.

Figure 2-88: ISU: Grounding lug location

Antennas

Ground external antennas using a suitable Grounding Kit such as an Andrew Type 223158-2 (http://www.commscope.com).

Chapter 3: Network Guidelines

3.1 Scope of This Chapter

This chapter provides a description of the typical networking topology required by RADWIN's Fiber in Motion Train-To-Ground solution.

3.2 Overview

Included in this chapter are:

- A general introduction to the network requirements for trackside and on-board networks,
- A description of the required routers' functionalities,
- A data flow description,
- Sample IP and VLAN assignment guidelines,
- A short description of the update messages during handovers, and how the recommended network topology supports these messages.

The typical networking described in this chapter enables broadband Train-To-Ground communication, while maintaining a handover time of less than 50ms.

Caution

Follow the guidelines carefully. Any questions or clarifications should be addressed to RADWIN's Professional Services team for an official response.

Prior to project rollout, a detailed network architecture (including topology and HW to be used) should be shared with RADWIN for confirmation.

3.3 Wayside Network

The RADWIN Fiber in Motion best-practice solution is based on a transparent layer 2 architecture:

- The backhaul network is connected to the Radio Base Stations (TBS) deployed along the tracks side via GbE copper or fiber, as a layer 2 based network.

- The backhaul network (existing or provided by the system integrator/customer) is used to aggregate traffic to/from the TBSs and send it to the control/data centres.
- The required network architecture must have a single core router, and L2 switches. All data communication to/from the train will pass via this router.
- A redundant ISU/OSU is provided to ensure higher resiliency of the solution.
- The TBS's network is synchronized either via GPS-based system (for above ground scenarios) or via Ethernet-based synchronization (for above or underground scenarios).
- For GPS based synchronization, the TBS integrated GPS Synchronization Unit is used.
- For Ethernet-based synchronization, the TBS's network is synchronized by Ethernet based synchronization, running over the same data backhaul network. The implementation of the synchronization protocol is via an Indoor Synchronization Unit (ISU) or Outdoor Synchronization Unit (OSU) that is connected to one of the network switches, and provides the master clock to all TBSs in the network.
- ISUs work using a star topology, while OSUs work using a ring topology.
- The synchronization architecture may vary depending on the specific network topology, so RADWIN needs to evaluate and approve the wayside network topology and assure it will support the synchronization protocol. Typical synchronization requirements include:
    - Layer 2 connection between all ISU/OSUs and TBSs.
    - Maximum of 4 switches between ISU/OSUs and each TBS.
    - Avoid high line speed utilization to prevent introduction of jitter and latency. The line load should be limited according to the following table:

Table 3-1: ISU/OSU-TBS switches vs. line utilization

Number of Switches Between ISU/OSU and TBS	Maximal Line Utilization
1	95%
2	85%
3	75%
4	65%

- Network switches should appropriately handle the system's relearning frames. These frames are VLAN tagged (802.1Q). Switch should forward the relearning traffic and update FIB (Forwarding Information Base).
- IEEE802.3az must be disabled on all switches.
- Spanning tree between train and wayside is not supported and must be disabled on switch ports connected to the RADWIN radios (both TBSs and TMUs).
- Static routing should be implemented between wayside core router and on-board routers. Implementation of dynamic routing protocols should be confirmed with RADWIN professional services.

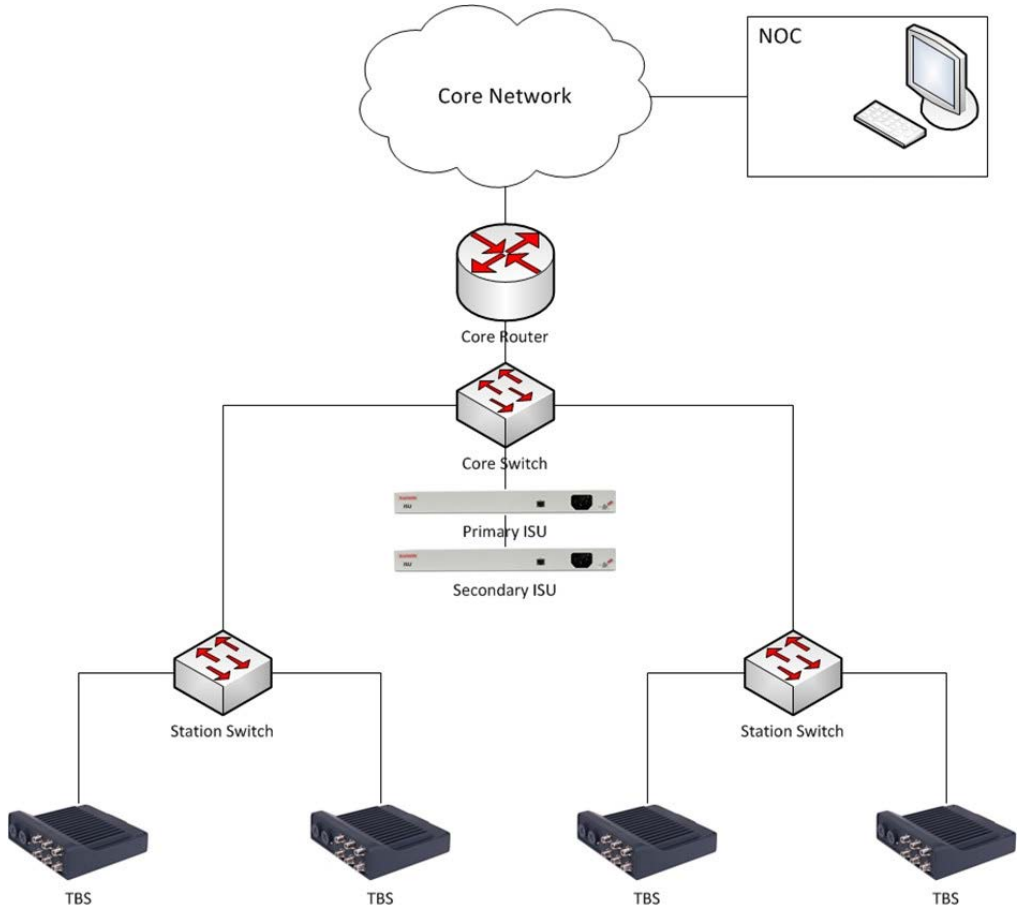

Figure 3-1: Typical wayside network arrangement

3.4 On-board Network

- Ideally, a Transportation Mobile radio Unit (TMU) is deployed at each end of the train. It is connected, via a PoE, to the train's internal network (Train network is responsibility of system integrator). L2 connectivity is required between both TMUs
- TMUs and train router should be on the same IP subnet
- Train equipment (APs, CCTV cameras, PIS devices etc.) should be on a different subnet from that of the TMU
- All of the train's traffic is sent via an on-board router (provided by the system integratorI) to the active TMU providing the highest throughput (which TMU is considered “active” is automatically determined by the system).
- The on-board train network should support VLANs
- Network switches should appropriately handle the system's relearning frames. These frames are VLAN tagged (802.1Q) and switch should forward the relearning traffic and update the FIB (Forwarding Information Base)
- IEEE802.3az should be disabled on all switches
- Spanning tree between train and trackside is not supported and must be disabled on switch ports connected to the RADWIN radios.

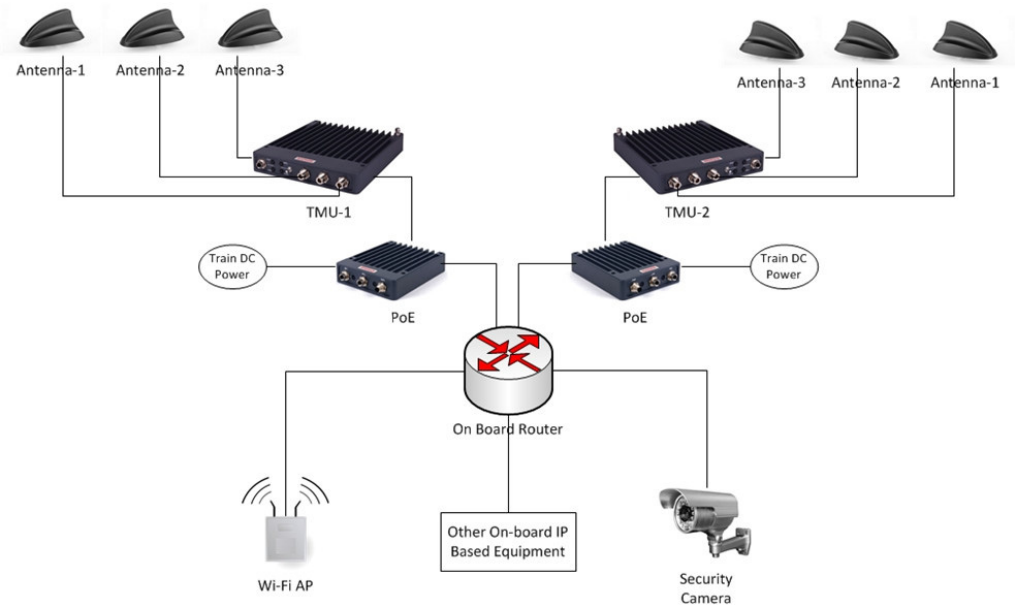

Figure 3-2: Typical on-board network (logical connectivity)

3.5 On-board Physical Connectivity

Figure 3-3 presents an example of a typical physical connectivity within an on-board network. On-board router must be connected through 1 physical port, but this port must support at least 2 sub interfaces (router on a stick / one armed router implementation). Each sub interface must have its own IP address and VLAN to enable the IP scheme detailed below (see Basic IP Scheme and Data Flow Path on page 3-5).

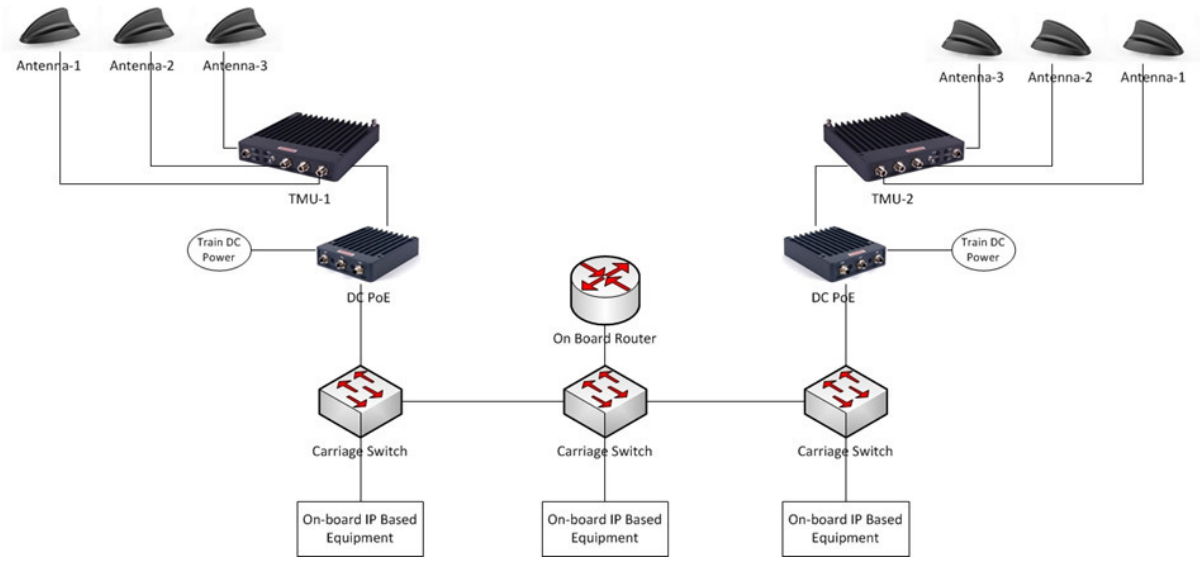

Figure 3-3: Typical on-board network (physical connections)

3.6 Wayside Core Router

The wayside network requires a core router that will act as the gateway between the Train-To-Ground system and the client's core network. All traffic between any train's on-board devices and the client's core network must pass through this router. The wayside core router must have at least 2 interfaces (see diagram below in Section 3.7):

Interface 1: Connects to the client's core network. It will be on the same subnet as the client's network and will be the gateway for all traffic from the client network targeted at devices on board trains.

Interface 2: Used for the Train-To-Ground network. It will be on the same subnet as the on-board router interface 1 and will be the gateway for all traffic from the on-board routers on all the trains.

All traffic between any on-board device and the trackside must pass through the on-board router.

3.7 Basic IP Scheme and Data Flow Path

An example of the basic IP scheme is shown here.

The traffic flows between the wayside core router and the on-board router. All elements between the routers (including switches and FiberinMotion radios) are pure L2 devices. They have an IP address for management only, and are transparent to the data traffic.

Overall, at least 3 IP subnets are required:

- Subnet A for the client core network.
- Subnet B for the train to ground segment.
- Subnet C for the on-board network.

If working with a VLAN, see Recommended VLAN Assignment on page 3-7.

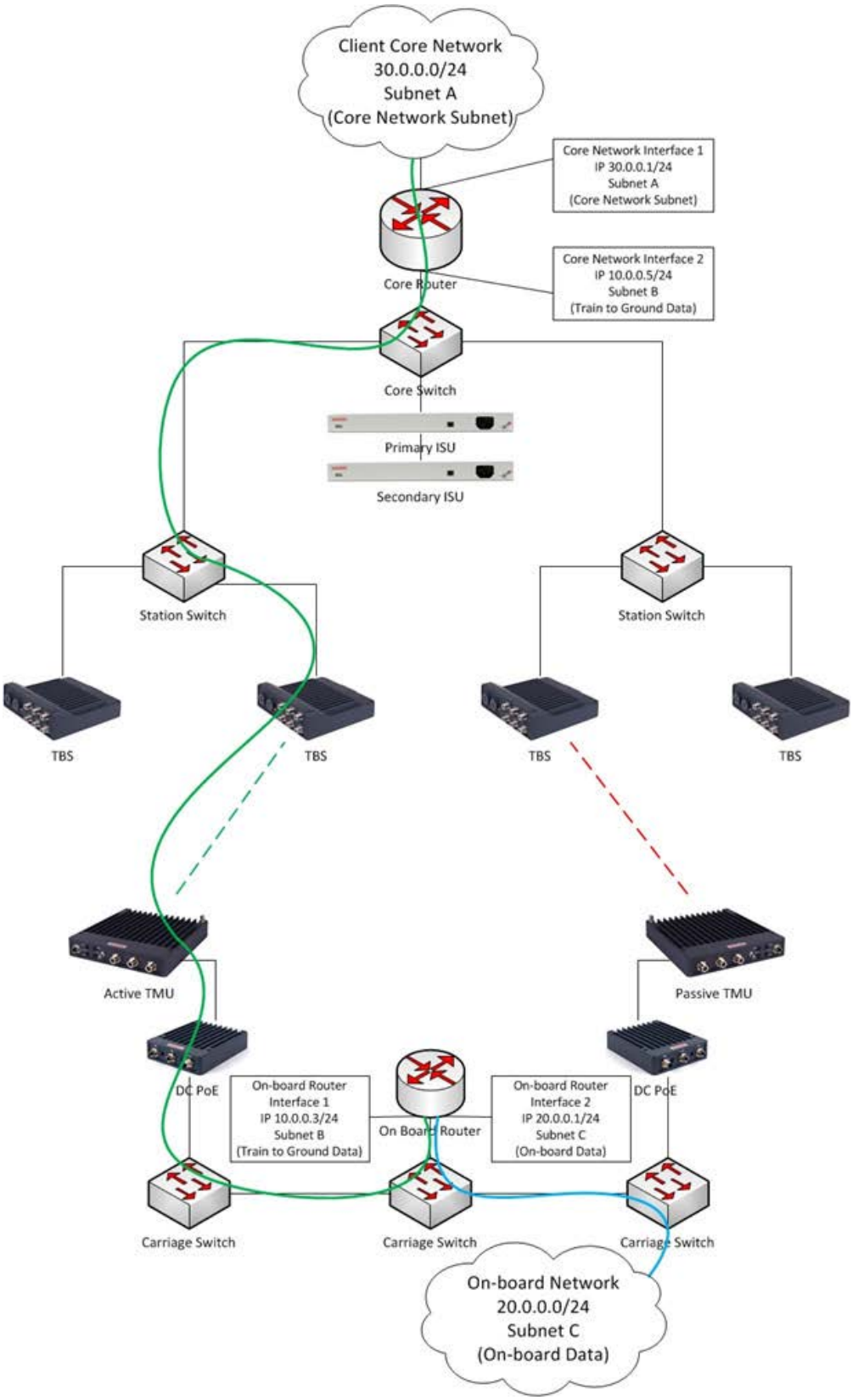

Figure 3-4: Basic IP Scheme and Data Flow

3.8 Recommended VLAN Assignment

A typical VLAN assignment throughout the network would include the following:

- VLAN V1 - For TBS and ISU management
- VLAN V2 - For trackside synchronization (Between ISU and TBSs)
- VLAN V3 - For:
    - User traffic (between trackside core router and on-board router)
    - TMU management
    - Signalling between two on-board TMUs (to support intra train hand over in dual TMU per train deployment)
- VLAN V4 - Train on-board internal network (for all train end user devices - end user APs, IP cameras, IP phones, etc.)

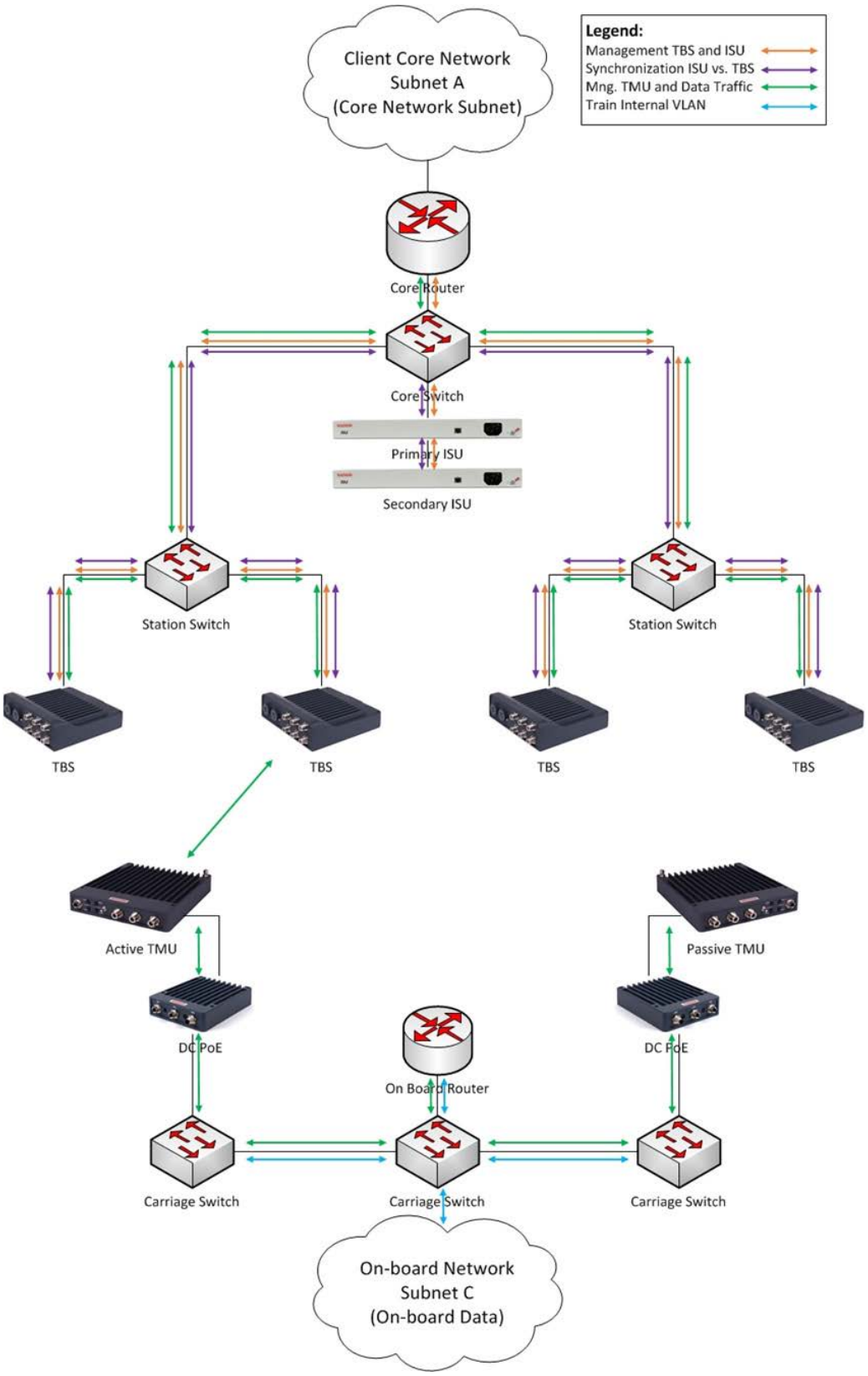

Figure 3-5: VLAN Assignment

3.9 Inter Base Handover (IBHO) Update Message

Fiber in Motion provides L2 connectivity, so all L3 features (routing etc.) are handled directly between the on-board router and the wayside core router. The advantage of this mode of operation is that no routing updates are needed during handovers, facilitating the continuous fast handovers needed as the train moves along the track.

However, there will be other L2 devices (switches) along the wayside network that must be updated.

When a TMU moves from one TBS to the next, there must be an update of the wayside network so the switches know the new data path. This update is made by sending an update message to the wayside core router. However, we do not wish to send an update message for each on-board device, as this will overload the system. For this reason, the update is sent regarding only 1 device - the MAC address of the on-board router (since all the on-board devices are behind it, they do not need to have individual update messages sent).

Consider the diagram shown in Figure 3-6, where a TMU is connected to the first TBS (TBS-1) and all traffic flows in the green path:

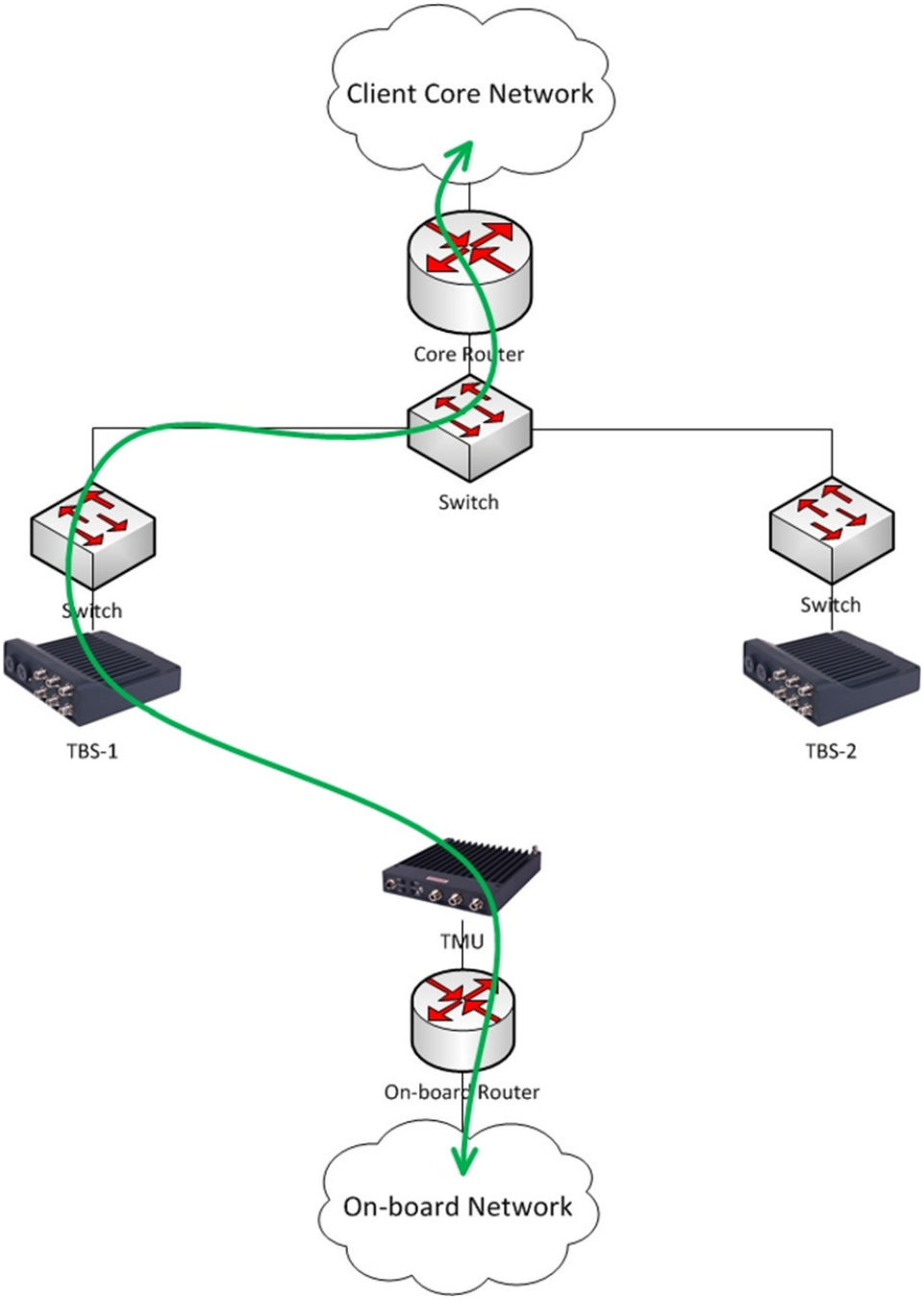

Figure 3-6: IBHO - Part 1

When the TMU has made a decision to switch from TBS-1 to TBS-2 (based on RSS thresholds) it initiates an update message (shown in blue in Figure 3-7) to the wayside core router, with the source MAC address of the on-board router.

All switches along the wayside network's new data path are then updated.

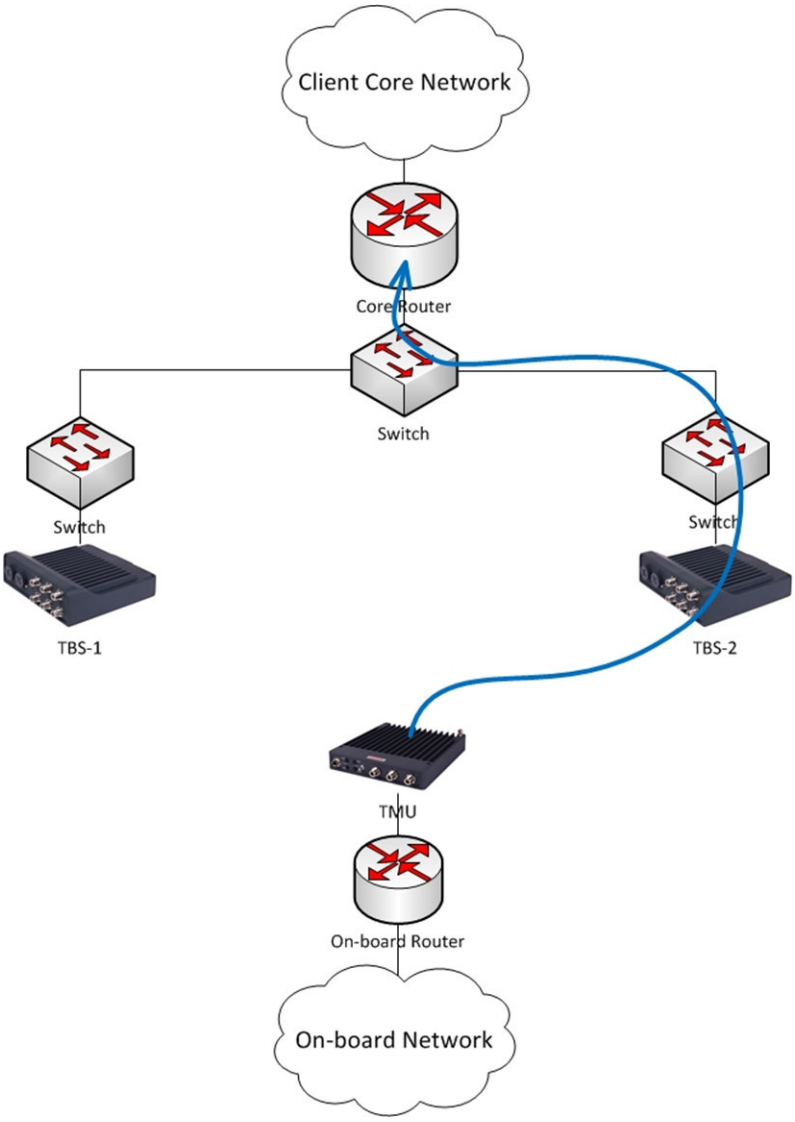

Figure 3-7: IBHO - Part 2

As a result, the TMU is connected to TBS-2 and all traffic flows in the new path.

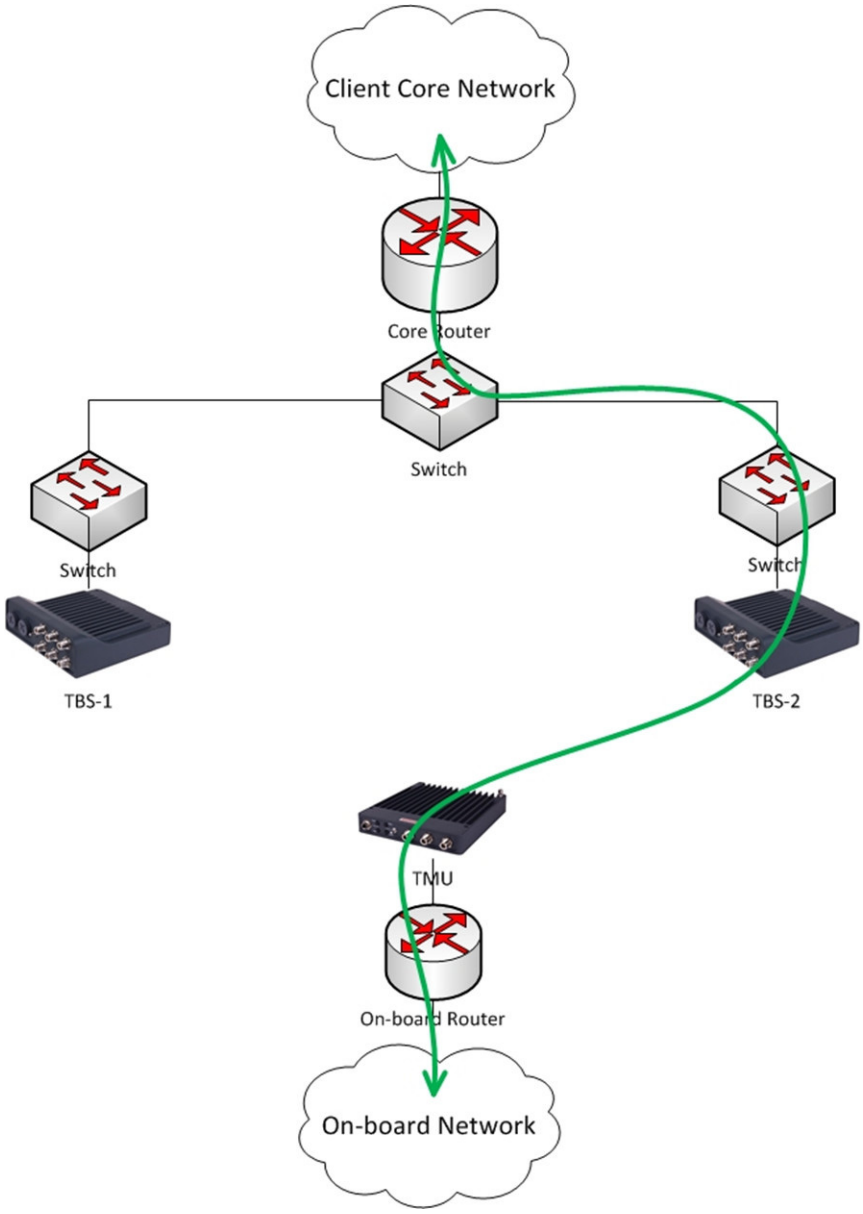

Figure 3-8: IBHO - Part 3

3.10 Intra Train Handover (ITHO) Update Message

Parallel to the Inter Base Handover (IBHO) process, described above, Fiber in Motion also supports an Intra Train Handover.

The ITHO feature, implemented in the TMUs, enables extended coverage and throughput. As mentioned above (see Train Side (On-board) Network on page 2-3) this mode requires 2 on-board TMUs (ideally at each end of the train), with L2 connectivity between them.

This process happens in parallel and independently from the IBHO. The background process consists of a continuous evaluation between the 2 on-board TMUs, as to which can receive the higher throughput (regardless of which base they are connected to).

When an ITHO occurs, an update must also be sent to the on-board router. This update will refresh the switches along the new data path as to the new active TMU.

Consider Figure 3-9 where it is shown that TMU-A is connected to TBS-1 and is ACTIVE (passing traffic). All traffic flows in the green path.

TMU-B is PASSIVE. It has an idle connection to a TBS and it monitors the potential throughput, but does not pass traffic.

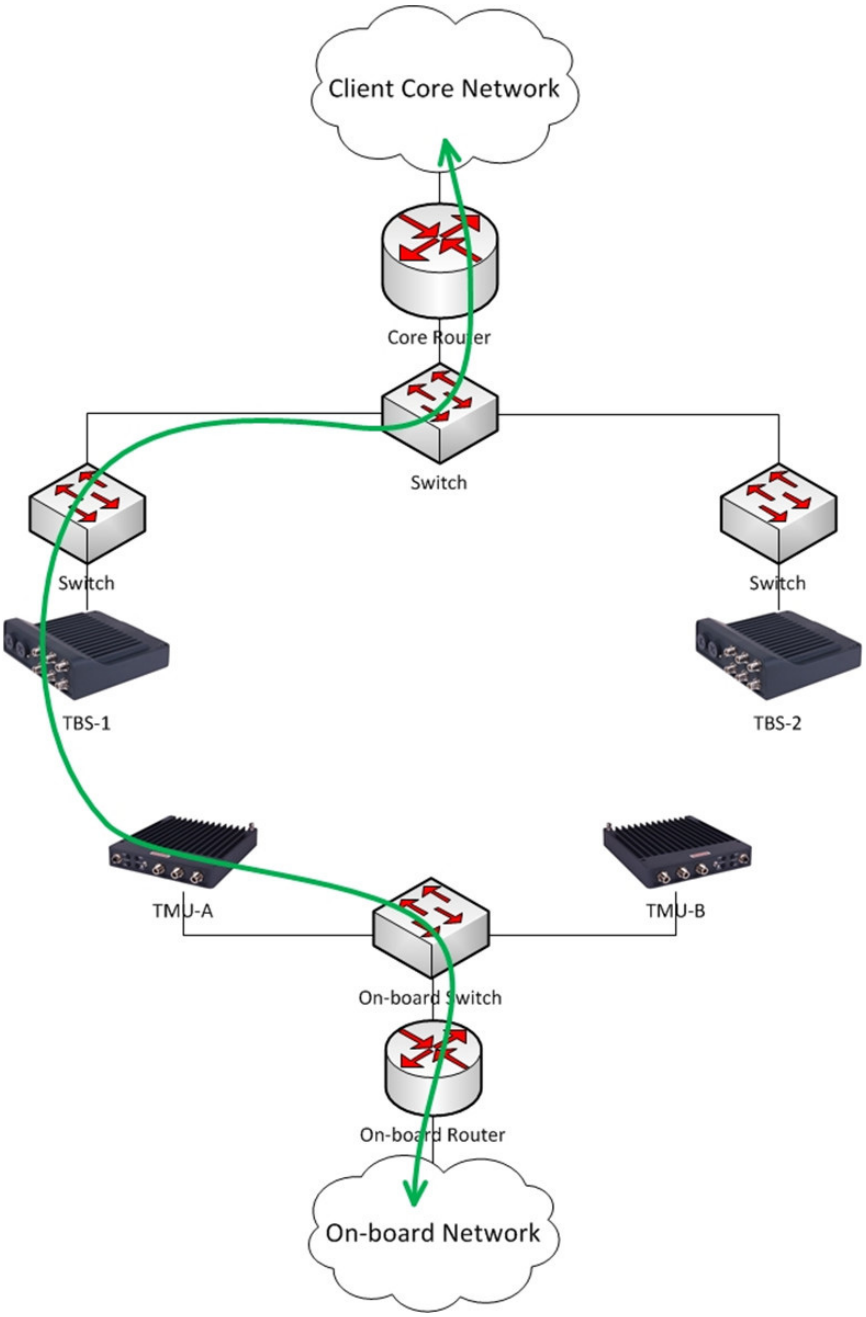

Figure 3-9: ITHO - Part 1

The Intra Train Handover mechanism discovers that a higher throughput can be achieved through TMU-B, defined at present as PASSIVE. (TMU-B may be connected to the same TBS as TMU-A or to a different one - this does not affect the ITHO).

An ITHO is therefore initiated and TMU-B is re-defined as ACTIVE. TMU-B then sends 2 update messages (marked in blue in Figure 3-10):

- Update message to wayside core router with on-board router MAC - to update the way-side L2 network of the new data path (same process as in the IBHO update described above)
- Update message to the other TMU (TMU-A) with the wayside core router MAC - to update the train L2 network of the new data path.

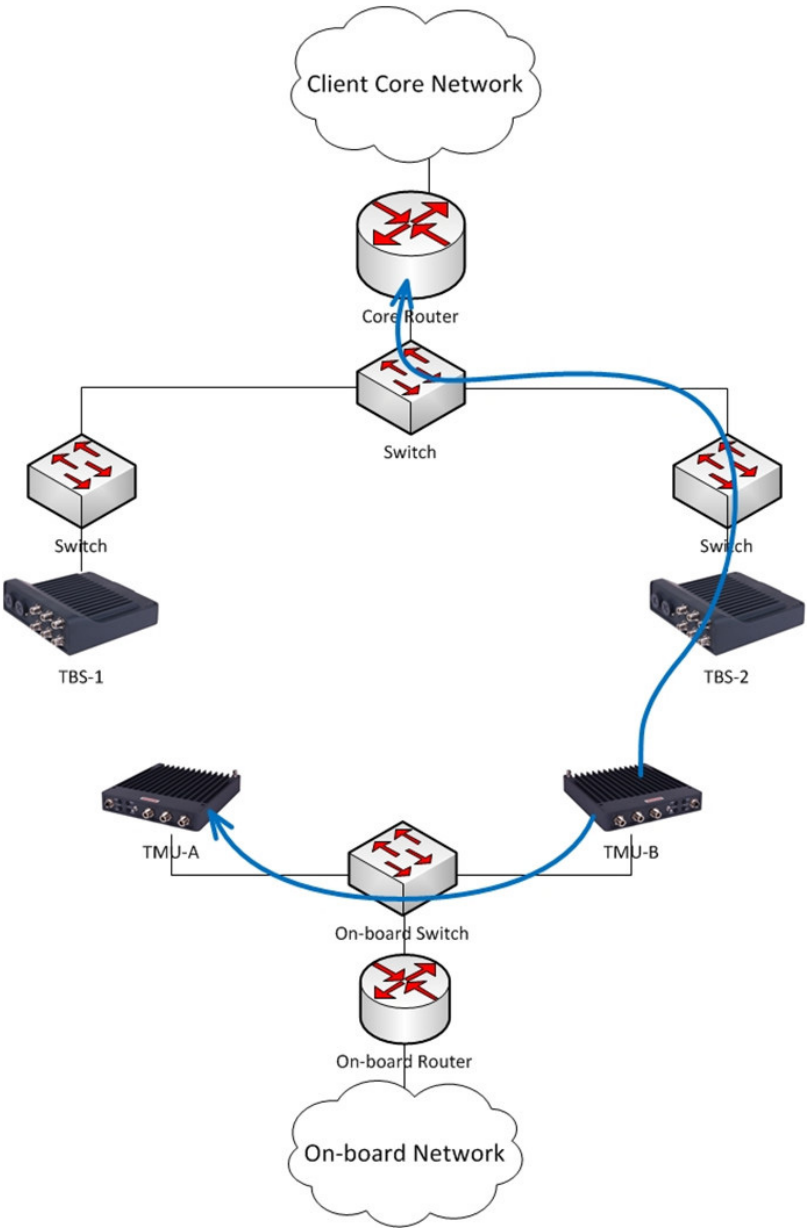

Figure 3-10: ITHO - Part 2

All on-board traffic now flows through TMU-B to TBS-2 in the new green path:

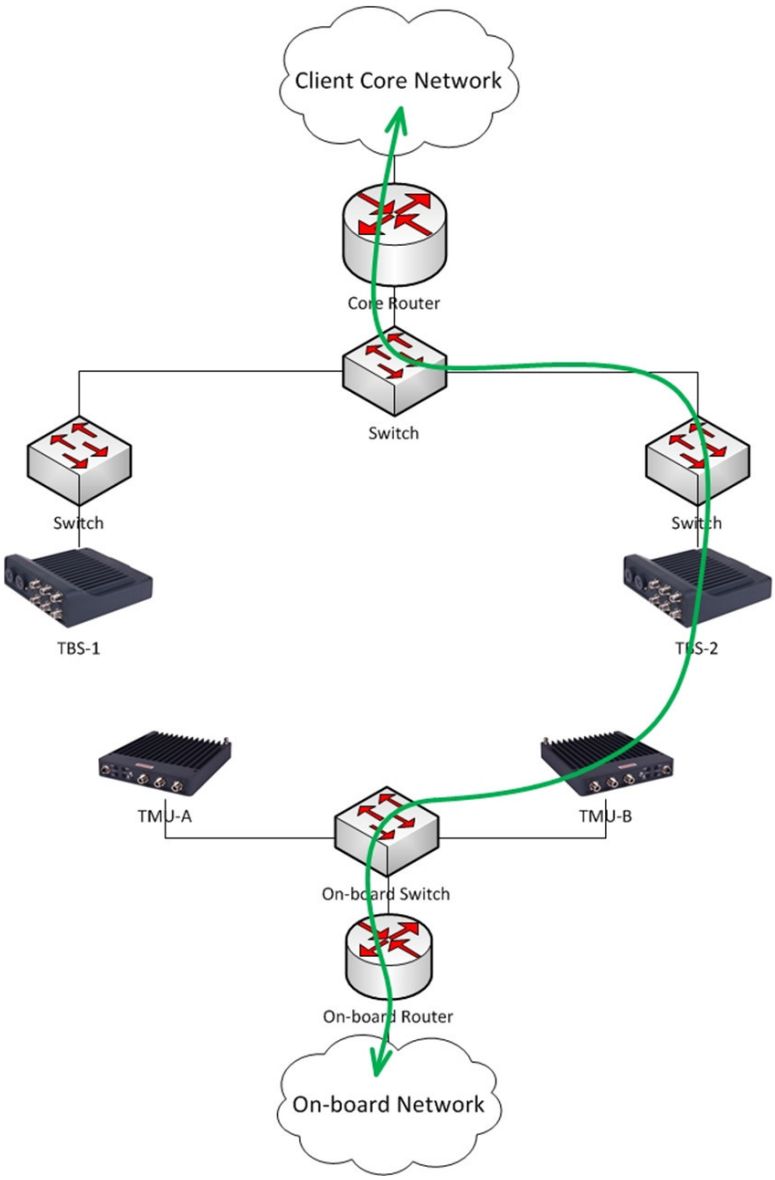

Figure 3-11: ITHO - Part 3

Chapter 4: Configuring the Radio Network

4.1 Scope of This Chapter

This chapter shows how to work with the Configurator Application, and provides a few examples of some parameters. It also includes some tips and advice for best practices when working with the Configurator.

4.2 Connecting to the Units

For a first time configuration, all units are set to an IP address of 10.0.0.120 with subnet mask 255.0.0.0. The laptop Ethernet card should be set to a free IP address on that subnet (for example 10.0.0.111).

All of the TBSs and any ISUs needed must be physically installed before you can work with the Configurator.

Note

ISUs are required only in an environment that does not have access to a GPS signal (tunnels, stations, etc.)

4.3 About the Configurator Tool

The Configurator Tool is used to configure each active device used in your project: TMUs, TBSs, and ISUs. You also use the Configurator Tool to set many general parameters including IP address details, gateways, frequencies and bandwidths, and much more.

Note

To use the Configurator Tool you must have MS Excel 2007 or later installed on your laptop(s).

The Configurator tool is an Excel file that consists of five tabs:

Main: Provides an overview of the contents of the project, as well as various buttons from which you can configure specific devices. See Main Tab.

Project: Allows you to enter various project-wide parameters, such as the frequencies and bandwidths used, synchronization, units' power, QoS, VLAN, and Ethernet mode, and more. See Project Tab.

Line: Allows you to enter the IP addresses of the various devices and gateways used, VLAN definitions and more. See Line Tab.

Towers: Allows you to enter the IP addresses of the various TBSs in the project in addition to their neighbors. See Towers Tab.

Trains: Allows you to define the rail cars that will be in the project and their TMUs. See Train Tab.

4.3.1 Method of Operation

Briefly, work with the Configuration file as follows:

- Change whatever values need to be changed using the Configurator file,
- Click on **Recalc all data** (if needed: see page 4-5), then
- Save the file.
- Once the file is saved, apply the values using either the **Configure Unit** button (see page 4-4), or the **HBS Batch Configuration button (**page 4-4).

The Configurator file will connect with the units, and apply the changes.

4.4 Using the Configurator Tool

Click on the desktop icon to start the Configurator. The file will open, and the **Main** tab will appear.

4.4.1 Main Tab

The **Main** tab is shown in Figure 4-1:

Inventory			
	Active	Backup	Total
Base Radios	24	0	24
Train Radios	5	0	5
GPS Sync Unit	24	0	24

Line	Name	Base	Train
1	LINE01	2	2
2	LINE02	2	1
3	LINE03	2	1
4	LINE04	2	1

*Figure 4-1: Configurator - **Main** tab*

Table on top right:

Set items in this table first, before carrying out any other tasks on this tab.

Mode	Protected
Download Software	Configuration + Release
Verify Hardware	Yes

Line	3

Figure 4-2: Main tab: Pre-Conditions

Mode: Shows the mode of the Configurator file (Protected or Unprotected)

Download software:
(Determines working details of the Configure Unit and HBS Batch Configuration buttons)

No means that any changes you make using the Configure Unit or HBS Batch Configuration buttons will affect this Configurator file only, and will not be downloaded to any units.

Configuration Only means that the changes you make using the Configure Unit or HBS Batch Configuration buttons will affect this Configurator file and will be downloaded to the relevant units.

Configuration & Release means that the changes you make using the Configure Unit or HBS Batch Configuration buttons will affect this Configurator file, will be downloaded to the relevant units, but only after the system checks if there is a system software update.

Compare/Verify instructs the system to compare the configuration of the relevant units as opposed to the configuration as shown in the file as it is at present (it relates to the open Excel file, and not the file saved on disk).

Verify Hardware: Not for customer use.

Line: Indicates for which line you are making configuration changes. This affects any changes you make using the Configure Unit or HBS Batch Configuration buttons.

Configure Unit: Click to open the Configurator dialog box. This enables you to configure individual units, one at a time. The line shown is determined by the value in the **Line** window. See Configuring Network Units.

About... Click to open a window showing the software version of the Configurator application.

Protect Click to protect the Configurator file from being changed.

Unprotect Click to allow the Configurator file to be changed. Password: psfiberinmotion

HBS Batch Configuration:

Once you have made changes in this file, recalculated any needed values, and saved the file, click this button to apply those changes to all of the TBSs,

instead of just one at a time. A command line interface window will open, and the update status of each unit will be shown.

Changes for only one line are done, as determined by the value in the **Line** window.

Recalc all data: After you have made changes to various parameters as described throughout this chapter, before applying them to any units, click this to re-calculate all other parameters that may have been affected by your changes. This does not apply any changes to any units.

Lower Table: Provides an overview of the equipment and lines used in the whole project.

4.4.2 Project Tab

The Project tab holds general configuration parameters that apply across the project.

Upper Table

The upper table of the **Project** tab is shown in Figure 4-3:

Parameter	Value	Desciption
Product Regulation Band	FCC 5.730-5.845 GHz FCC/IC	Band Supported
Channel Bandwidth [MHz]	80	Up to 1 Channels. Non optimal capacity may be achieved in limited capacity products.
Synchronization	ISU	
Desired Tx Ratio (downlink/uplink)	Symmetric (50%/50%)	
Tx Power, HBS [dB]	10	
Tx Power, HMU [dB]	10	
Traps Filter On	Yes	
VLAN Management	no	
Adaptive Modulation Mode	Auto - MIMO/diversity (3x3)	
Write Community	netman	
QoS Mode	None	
Max Distance	1800	Meters
GSU Tx Ratio (downlink/uplink)	Symmetric (50%/50%)	Applicable for backhaul
Base Ethernet Mode	Auto Sense	
Intra Train Handover Operation	Aggregate	
Limited spectrum mode	Disable	Frequency reuse factor
EHSS jitter mitigation	No	Decrease EHSS tolerange in case of high track side network jitter
Network ID	FinM	4 letter repersenting the network
Traps Destinations	10.0.0.200	Up to 10 IP's (comma seperated)
Time Zone	120	Offset in minutes from GMT
Number Of Trains per Base	5	
GPS Antenna Configuration	Integrated	Applicable for TBS
Product	AC	

*Figure 4-3: Configurator - **Project** tab, upper table*

Band: Click this pull-down menu to choose the frequency band to be used for the project. Only those bands that are in accordance with your regulatory environment will appear.

Channel Bandwidth: Click this pull-down menu to choose the bandwidth to be used for this project. The frequencies used in the **Tower** tab (F1, F2, F3, etc) will be the base frequency chosen in Band, with the bandwidth added.

Note that not all frequency bands allow all bandwidths to be used.

Synchronization: Click this pull-down menu to choose the type of synchronization used in this project:

Integrated GPS: Use a GPS unit integrated in the TBS. Used in above ground scenarios.

GSU: Use an external GPS unit. Used in above ground scenarios. Note that this requires extra installation and configuration for the GSU.

	ISU: Use the Indoor Synchronization Unit. Used in below ground scenarios. **None:** Do not use synchronization
Desired Tx Ratio (downlink/uplink):	**Symmetric (50/50):** Use this if there is no significant difference in the transmission conditions between TBS->TMU and TMU->TBS. **Max Uplink (20/80):** Use this if your project requires the uplink (TMU->TBS) to be much stronger than the downlink (TBS->TMU). **Uplink (30/70):** Use this if your project requires the uplink (TMU->TBS) to be stronger than the downlink (TBS->TMU). **Downlink (70/30):** Use this if your project requires the downlink (TBS->TMU) to be stronger than the uplink (TMU->TBS). **Max Downlink (80/20):** Use this if your project requires the downlink (TBS->TMU) to be much stronger than the uplink (TMU->TBS).
Tx Power, HBS [dB]:	Maximum is typically 25 dB, minimum is 0. Set the value that will give you the best throughput with the least noise.
Tx Power, HMU [dB]:	Maximum is typically 25 dB, minimum is 0. Set the value that will give you the best throughput with the least noise.
Traps Filter On:	Enable this to filter the traps to those that are relevant for your project. If this is not enabled, then every change or trap - not matter how trivial - will be recorded, and your traps list will quickly become very large and cumbersome. We recommend to enable this parameter.
VLAN Management:	Enable if your project is using a VLAN.
Adaptive Modulation Mode:	**MIMO:** (Multi-In, Multi-Out) Set the transmission method to use one data stream, but multiple data signals. This is useful in a less noisy environment that requires a higher capacity, but where drops will not likely occur, such as when the train is stopped at a station. **Diversity:** Set the transmission method to use more than one data stream. This is useful when the train is travelling in a noisy environment or when drops are likely to occur, such as during fast movement. **Auto MIMO/Diversity:** Set the system to automatically detect the conditions to switch between MIMO and Diversity.
Write Community:	Set the link password here.

QoS Mode:	Quality of Service (QoS) is a technique for prioritization of network traffic packets during congestion. RADWIN products support two classification criteria, VLAN based or Diffserv based. Choose which criterion to use. For more details on working with QoS (see Lower Table: Quality of Service (QoS) Options on page 4-9). **None:** Do not enable QoS **VLAN:** Choose the VLAN criterion for QoS **Diffserv:** Choose the Diffserv criterion for QoS
Max Distance:	Enter the maximum distance between the TBSs and the TMUs. Make sure to enter the units in column C.
GSU Tx Ratio (down-link/uplink):	Set this the same as Desired Tx Ratio. If it is not the same, GPS synchronization will not work properly.
Base Ethernet Mode:	Set the ethernet mode for the TBSs. Use manual configuration when attached external equipment does not support auto-negotian. **Auto Sense:** Detect the line speed and duplex mode automatically, and apply those values. **Auto Sense (100M/b):** Start at 100M/b, but detect the line speed and duplex mode automaticall, and change it if necessary from 100M/b. **Force 100 Full Duplex:** Choose 100M/b and full duplex for the line speed and duplex mode.
Intra Train Handover Operation:	Sets which data stream direction is used to judge when to carry out the intra-train handover. **Uplink:** Check the uplink direction (TMU-> TBS) only when determining when to carry out the intra-train handover. **Aggregate:** Check both the uplink and downlink directions, and use an average of the signal strength value when determining when to carry out the intra-train handover. **Downlink:** Check the downlink direction (TBS->TMU) only when determining when to carry out the intra-train handover.
Limited spectrum mode:	Used for Interference Mitigation for Co-channel Neighbors (see Interference Mitigation for Co-channel Neighbors on page 4-17). If your project uses 3 or fewer frequencies, then we recommend you use this option. If your project uses more than 3 frequencies, this option is not needed.

EHSS jitter mitigation:	Ethernet Hub Site Synchronization jitter mitigation: If there is a high level of wayside network jitter, set this to Yes to minimize the adverse affect of jitter on transmission synchronization.
Network ID:	A 4-letter term that represents the network. This “name” is used in a variety of places.
Traps Destinations:	IP address of the trap destination device. For redundancy, you can have up to 10 different destinations. Separate their IP addresses with a comma.
Time Zone:	Enter the number of minutes that the system is ahead of Greenwich Mean Time (GMT or UTC).
Number Of Trains per Base:	Enter the total number of TMUs per TBS (the value is actually the number of TMUs, not trains). Each TBS needs this value to manage its resources. There can be up to two TMUs per train, and up to 6 TMUs per TBS total.
GPS Antenna Configuration:	**Integrated:** If your TBS units have an integrated GPS capability, select this option. **External:** If your TBS units do not have an integrated GPS capability, select this option. Note that in this case an external GPS Unit (GSU) will be required to implement GPS synchronization. **None:** If you are not using GPS synchronization, select this option.
Product:	**N:** Choose this option if you are using the 802.11n radio transmission standard. **AC:** Choose this option if you are using the 802.11ac radio transmission standard.

Lower Table: Quality of Service (QoS) Options

The lower table of the Project tab allows you to set QoS options.

The lower table of the **Project** tab is shown in Figure 4-4 (VLAN criteria shown):

QoS	Min	Max	Downlink %	Uplink %	Downlink MIR	Uplink MIR
Real Time	6	7	15	15	0	0
Near Real Time	4	5	20	20	0	0
Controlled Load	2	3	25	25	0	0
Best Effort	0	1	40	40	0	0

*Figure 4-4: Configurator - **Project** tab, lower table*

QoS Overview

A variety of traffic types containing different content can travel throughout the network, and as a result through RADWIN equipment. Certain types are more sensitive to delays than

others, and as such the ethernet network places a tag on each packet representing its priority.

The RADWIN Quality of Service feature (QoS) can work with two different standards of traffic prioritization: **VLAN** (IEEE 802.1q/p) and **Diffserv** (RFC 2475). Each of these standards divides the priorities differently: VLAN uses 8 levels, while Diffserv uses 64 levels.

RADWIN equipment can recognize these network priority tags, and can place the traffic in one of 4 different QoS priority levels, as shown in Table 4-1:

Table 4-1: Default priorities and allocation by VLAN vs. Diffserv

QoS Priority Level	Standard Priority		Typical Use
	Diffserv	VLAN	
Real Time	48-63	6-7	High priority: video conferencing, phone calls, etc.
Near Real Time	32-47	4-5	Slightly lower priority than Real Time, but with high-quality delivery with guaranteed minimum latency. Streaming video, internet sites.
Controlled Load	16-31	2-3	Similar to Best Effort in uncongested conditions. A very high percentage of transmitted packets will be delivered successfully and not exceed the minimum delay. Does not guarantee minimum latency.
Best Effort	0-15	0-1	Lowest priority: email, messaging, etc.

That is, if working with the Diffserv standard, traffic tagged with priority levels from 48 to 63 are treated as “Real Time”, those with levels from 47 to 32 are treated as “Near real time”, etc.

The RADWIN Quality of Service feature (QoS) allows you to change which standard priority level is translated into a priority level used in RADWIN equipment.

Example: If you know your network will have a great deal of higher priority traffic, but you only want the highest to receive preferential treatment, you can define “Real Time” as being from 55 to 63, instead of the default values 48-63. You must cover all levels, so in this case, make sure to re-define “Near Real Time” as 32 to 54.

Percentages: You can set each priority level (in the upload and download direction separately) to take up a certain percentage of the total traffic, so long as that percentage adds up to 100.

MIR: You can also place an absolute maximum limit on the amount of traffic allowed to pass per priority level, no matter how much traffic comes through.

Setting up QoS

QoS for Transportation FiberinMotion is set up in two phases:

1. Choose the QoS priority standard: ***Project*** *tab, upper table, QoS Mode*
   (Choose None, VLAN, or Diffserv)

   The lower table will show the default values according to the standard you have chosen.

2. Configure the values for each quality group: ***Project*** *tab, lower table:*

QoS	Min	Max	Downlink %	Uplink %	Downlink MIR	Uplink MIR
Real Time	6	7	15	15	0	0
Near Real Time	4	5	20	20	0	0
Controlled Load	2	3	25	25	0	0
Best Effort	0	1	40	40	0	0

*Figure 4-5: Configurator - **Project** tab, lower table (VLAN options)*

QoS	Min	Max	Downlink %	Uplink %	Downlink MIR	Uplink MIR
Real Time	48	63	15	15	0	0
Near Real Time	32	47	20	20	0	0
Controlled Load	16	31	25	25	0	0
Best Effort	0	15	40	40	0	0

*Figure 4-6: Configurator - **Project** tab, lower table (Diffserv options)*

Min: Set the minimum standard priority level that the QoS category will receive:

- In Figure 4-5 (showing values according to the VLAN standard), Real Time has a minimum of 6.
- In Figure 4-6 (showing values according to the Diffserv standard), Real Time has a minimum of 48.

Max: Set the maximum standard priority level that the QoS category will receive.

- In Figure 4-5 (showing values according to the VLAN standard), Real Time has a maximum of 7.
- In Figure 4-6 (showing values according to the Diffserv standard), Real Time has a maximum of 63.

Caution

You must make sure to cover all the priority levels, otherwise the system will create errors. No warning will be given.

3. **Downlink %** and **Uplink %** : Set the percentage of traffic each QoS category is to be allotted. This can be different for the downlink (TBS -> TMU) or uplink (TMU ->TBS) direction. If traffic of a certain QoS level is more than this percentage, it is treated as Best Effort.

Caution

The percentages cannot add up to more than 100, otherwise the system will create errors. No warning will be given.
If the percentages add up to less than 100, the unused priority will be distributed to the remaining priorities.

4. **Downlink MIR** and **Uplink MIR:** Optional. If you want to limit traffic of a certain QoS level to a certain rate, enter that rate here, in Mbps (max: 100).

4.4.3 Line Tab

The **Line** tab is shown in Figure 4-7:

No.	HMU Gateway	HMU Subnet	HBS Gateway	HBS Subnet	HMU Management VLAN	HBS Management VLAN	Syncronization VLAN	Syncronization DomainID	L2 Learning VLAN	ISU IP	Backup ISU IP	Name	Color	Additional Learning VLANS	HBS NTP Server	HMU NTP Server
1	10.1.255.254	255.255.0.0	10.1.255.254	255.255.0.0	901	201	301	LINE01	901	10.1.255.253	10.1.255.252	LINE01	#79cdcd		10.1.255.254	10.1.255.254
2	10.2.255.254	255.255.0.0	10.2.255.254	255.255.0.0	902	202	302	LINE02	902	10.2.255.253	10.2.255.252	LINE02	#ffcb31		10.2.255.254	10.2.255.254
3	10.3.255.254	255.255.0.0	10.3.255.254	255.255.0.0	903	203	303	LINE03	903	10.3.255.253	10.3.255.252	LINE03	#894e35		10.3.255.254	10.3.255.254
4	10.4.255.254	255.255.0.0	10.4.255.254	255.255.0.0	904	204	304	LINE04	904	10.4.255.253	10.4.255.252	LINE04	#ed1b35		10.4.255.254	10.4.255.254

*Figure 4-7: Configurator - **Line** tab*

Enter the various IP addresses for the devices shown.

The devices on the first line of the worksheet are associated with Line 1, those on the second line with Line 2, etc.

No. Enter the line number.

HMU Gateway: TMU gateway for all TMUs on the line. The individual IP addresses of the TMUs on the rail cars are defined in the **Train** tab (see Train Tab on page 4-17).

HMU Subnet: TMU subnet for all TMUs on the line.

HBS Gateway:	TBS gateway for all TBSs on the line. The individual IP addresses of the TBSs are defined in the **Towers** tab (see Towers Tab on page 4-15).
HBS Subnet:	TBS subnet for all TBSs on the line.
HMU Management VLAN:	VLAN definition for all TMUs.
HBS Management VLAN:	VLAN definition for all TBSs.
Synchronization VLAN:	VLAN definition for all ISUs.
Synchronization Domain ID:	Domain ID for all ISUs.
L2 Learning VLAN:	VLAN definition for the data (traffic) stream. Called “learning” because it relates to the fact that each TBS must learn about the new TMU that is coming into its range.
ISU IP:	IP address for the primary ISU in the line
Backup ISU IP:	I IP address of the secondary ISU in the line
Line:	The name of the line. This name will be used in several places, so use a logical term.
Color:	Each line has a separate color, helping you to keep things organized. Set the background color for the line here. The color is shown, and is also used as a background for the **Configure Unit** dialog box (see Configuring Network Units on page 4-25), in the **Towers** tab (see Towers Tab on page 4-15), and the **Train** tab (see Train Tab on page 4-17). The first two digits are for the Red color component (Hex format from 00 for black to FF for Red), the next two are for the Green color component (Hex format from 00 for black to FF for Green), and the last two are for the Blue color component (Hex format from 00 for black to FF for Blue).

Table 4-2: Color Codes

Value	Color
#FF0000	Red
#00FF00	Green
#0000FF	Blue
#FF00FF	Magenta
#00FFFF	Cyan
#FFFF00	Yellow

Additional Learning VLANs Not for customer use

HBS NTP Server: IP address of the Network Timing Protocol server for all TBSs in the network.

HMU NTP Server: IP address of the Network Timing Protocol server for all TMUs in the network.

4.4.4 Towers Tab

The **Towers** tab is shown in Figure 4-8:

A	B	AA	AJ	AK	AL	AO	AP	AQ	AS	AT	AU	AV	AW	AY
		IP	Frequency	kHz										
o.	Name	ACC-BS			Frequency Neighbors	Line	Dir	No.	Base Neighbors	IP NeighborsList	Neighbor Line No.	Co channel Neighbors	CoChannelNeighborsIPs	CNIndex
1	BS.01.2.1	10.1.1.1	F1	5475000	0|0|0|0|0|0|	01	2	1		0|0|0|0|0|0|0|0|0|0|0|	0|0|0|0|0|0|		0|0|0|0|0|0|	0
2	BS.01.2.2	10.1.1.2	F2	5515000	0|0|0|0|0|0|	01	2	2		0|0|0|0|0|0|0|0|0|0|0|	0|0|0|0|0|0|		0|0|0|0|0|0|	0
3	BS.02.2.3	10.1.2.3	F3	5555000	0|0|0|0|0|0|	02	2	3		0|0|0|0|0|0|0|0|0|0|0|	0|0|0|0|0|0|		0|0|0|0|0|0|	1
4	BS.02.2.4	10.1.2.4	F3	5555000	0|0|0|0|0|0|	02	2	4		0|0|0|0|0|0|0|0|0|0|0|	0|0|0|0|0|0|		0|0|0|0|0|0|	1
5	BS.03.1.1	10.1.3.1	F3	5555000	0|0|0|0|0|0|	03	1	1		0|0|0|0|0|0|0|0|0|0|0|	0|0|0|0|0|0|		0|0|0|0|0|0|	2
6	BS.03.1.2	10.1.3.2	F2	5515000	0|0|0|0|0|0|	03	1	2		0|0|0|0|0|0|0|0|0|0|0|	0|0|0|0|0|0|		0|0|0|0|0|0|	2
7	BS.04.1.3	10.1.4.3	F1	5475000	0|0|0|0|0|0|	04	1	3		0|0|0|0|0|0|0|0|0|0|0|	0|0|0|0|0|0|		0|0|0|0|0|0|	0
8	BS.04.1.4	10.1.4.4	F3	5555000	0|0|0|0|0|0|	04	1	4		0|0|0|0|0|0|0|0|0|0|0|	0|0|0|0|0|0|		0|0|0|0|0|0|	0
9	TBD		F1	5475000									0|0|0|0|0|0|	1
10	TBD		F1	5475000									0|0|0|0|0|0|	1
11	TBD		F1	5475000									0|0|0|0|0|0|	2

*Figure 4-8: Configurator - **Towers** tab*

Use the **Towers** tab to define the connectivity characteristics of all TBSs in the project.

In some versions of the Configuration file, some of the fields are linked to others. This is project-specific and may not be relevant for your project. You must verify that all values entered are the correct ones.

No.	Sequence number of the TBS in the whole project.
Name	Enter a name for the TBS. Choose a logical name, as this name is used in many places.
ACC-BS	IP address of the TBS unit.

Frequency	From the pull-down menu, choose the frequency at which the TBS unit will work. The frequencies are determined by Band: and Channel Bandwidth: values in the **Tower** tab. F1, F2, F3, etc will be the base frequency chosen in Band, with the value chosen in Channel Bandwidth added. For example, if the Band chosen is 5.475-5.720 GHz, and the bandwidth is 40MHz, then F1 = 5.475GHz, F2 = 5.515GHz, F3 = 5.555GHz, etc.
kHz	The frequency in kHz is shown automatically as a result of your choice in the Frequency column.
Frequency Neighbors	Shows the frequencies of the neighbors of the TBS. The values shown depend on the names of the neighbors you enter in the **Base Neighbors** column.
Line	Choose the number of the line here, preceded by a zero.
Dir	Write 1 if there is one TBS that serves both directions, write 2 of there is a TBS for each direction.
No.	Sequence number of the TBS in the specific line.
Base Neighbors	Enter the name(s) of each TBS that is close enough to be considered a neighbor. Be careful to enter the exact same term for the neighboring TBS as shown in the **Name** column for that unit. Separate multiple values by a comma.
IP Neighbors List	Shows the IP addresses of the neighboring TBS units in accordance with the list you created in the **Base Neighbors** column.
Neighbor Line No.	Shows, in order, the line number for each neighboring TBS unit, n accordance with the list you created in the **Base Neighbors** column.
Co-Channel Neighbor	Used for Interference Mitigation for Co-channel Neighbors. (see Interference Mitigation for Co-channel Neighbors on page 4-17). If your project uses 3 or fewer frequencies, then we recommend you use this option. Enter the name(s) of the co-channel neighbor(s). If there are more than one, separate them by a comma (no spaces!).
Co-Channel Neighbor-sIPs	Shows the IP address(es) of the co-channel neighbor(s) in accordance with the names you recorded in the **Co-Channel Neighbor** column. Used for Interference Mitigation for Co-channel Neighbors.
CNIndex	Indicates which TBS will use which timeslots in the frame, in the Interference Mitigation for Co-Channel Neighbors option.

4.4.5 Train Tab

The **Train** tab is shown in Figure 4-9:

A	C	G	H	I	K
No.	IP	Line	Num	Car # 1	Car # 1 Router IP
1	10.1.1.1	1	1	CAR-01.01	10.1.1.2
2	10.1.2.1	2	1	CAR-02.01	10.1.2.2
3	10.1.3.1	3	1	CAR-03.01	10.1.3.2
4	10.1.4.1	4	1	CAR-04.01	10.1.4.2
5	10.1.1.3	1	2	CAR-01.02	10.1.1.4
6					

*Figure 4-9: Configurator - **Train** tab*

No.	Sequence number of the TMU in the whole project.
IP	IP address of the TMU.
Line	Line on which the TMU works.
Num	When two TMUs are used on a car, set here which TMU is “1” and which one is “2”. This is not necessarily the “active” or “passive” TMU; that is determined by conditions in the field and can change from minute to minute.
Car #1	Name of Car #1. Choose a logical name, as this name is used in many places.
(Car #2)	(Optional) Name of Car #2. Choose a logical name, as this name is used in many places.
Car #1 Router IP	IP address of router in Car #1. Note that this is the IP address of the router, and not of the TMU, or any other individual piece of equipment on board. This keeps the network simple - as the TBS, ISUs, and other items relate to this single IP address, and not to the many IP addresses of the individual items of equipment.

4.5 Interference Mitigation for Co-channel Neighbors

If your system uses 3 or fewer frequencies, we recommend that you use the **Co-Channel Neighbor Interference Mitigation** method described here to reduce interference between TBSs.

- This method is used *in addition* to the Hub Site Synchronization method.

- If your system uses more than 3 frequencies, this method of interference mitigation is not needed.

4.5.1 Basic Situation

The three frequencies are used on the TBSs in a staggered fashion: TBS1 uses F1, TBS2 uses F2, TBS3 uses F3. The pattern is then repeated: TBS4 has again F1, TBS5 has F2, TBS6 has F3, and so on.

We assume that the nominal distance between each TBS is at least 500m (below ground; above ground this value can be as large as 2000m). See Figure 4-10.

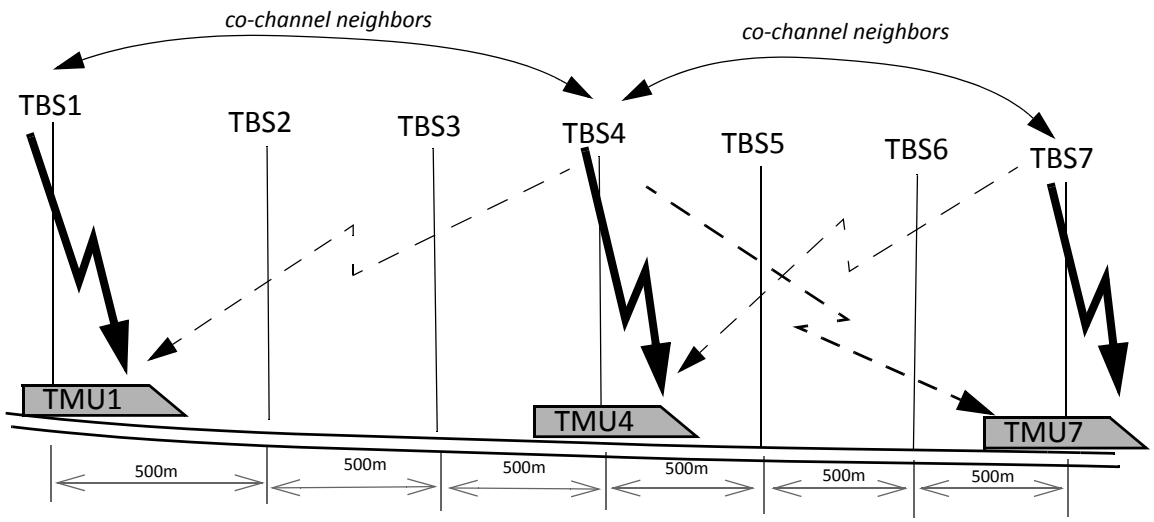

Figure 4-10: Co-Channel Neighbors

At a given moment, a rail car (with TMU1) is synchronized with TBS1, and using frequency F1. At this same moment, this rail car is about 1500 meters away from TBS4, which is also using F1[1].

Any signal that TMU1 receives from TBS4 at this point is considered interference. If the signal from TBS4 is strong enough, the interference can harm the throughput, and needs to be mitigated.

This situation continues throughout the line - TBS7 can interfere with TBS4/TMU4, and in turn TBS4 can interfere with TBS7/TMU7. TBS7 can further interfere with TBS10, TBS10 can interfere with TBS7 and TBS13, and so on down the line.

The two units that can interfere with each other are called “co-channel neighbors”.

4.5.2 Necessary Pre-Conditions

If the “Co-Channel Neighbor Interference Mitigation” option is configured, it will be activated or de-activated automatically according to the conditions described below. Note that the activation conditions and de-activation conditions are not exactly symmetrical.

1. *If fewer than 3 frequencies are used, the values would be 1000m for two and 500m for one frequency.*

Activation Conditions

» The TBS co-channel neighbor is transmitting with the Primary TMU on its rail car[1],

AND

» The detected signal from the TBS co-channel neighbor is above the threshold signal strength for activation (see Table 4-3).

Table 4-3: Threshold signal strength levels - activation criteria

Signal Strength between TBS and TMU	Difference in signal strength between TBS and its co-channel neighbor	Activate Option?
-70 or above	Greater than 16	No
-70 or above	**16 or less**	**Yes**
-74 to -71	Greater than 14	No
-74 to -71	14 or less	Yes
-78 to -75	Greater than 12	No
-78 to -75	12 or less	Yes
-79 or below	Greater than 9	No
-79 or below	9 or less	Yes

De-Activation Conditions

» The TMU of the TBS co-channel neighbor is re-defined as the Secondary TMU,

OR

» The detected signal from the TBS co-channel neighbor is below the threshold signal strength for de-activation (the values are different from that of activation: see Table 4-4).

Table 4-4: Threshold signal strength levels - de-activation criteria

Signal Strength between TBS and TMU	Difference in signal strength between TBS and its co-channel neighbor	De-Activate Option?
-70 or above	**Greater than 20**	**Yes**
-70 or above	20 or less	No
-74 to -71	**Greater than 18**	**Yes**

1. *This is the "active" TMU. If the co-channel neighbor is transmitting with its Secondary TMU, the signal will be weaker and sporadic, resulting in a low enough interference level as to be insignificant.*

Table 4-4: Threshold signal strength levels - de-activation criteria

Signal Strength between TBS and TMU	Difference in signal strength between TBS and its co-channel neighbor	De-Activate Option?
-74 to -71	18 or less	No
-78 to -75	**Greater than 16**	**Yes**
-78 to -75	16 or less	No
-79 or below	**Greater than 13**	**Yes**
-79 or below	13 or less	No

4.5.3 Method of Operation

The co-channel neighbor interference mitigation option works as follows:

Split timeslots: TBS1 is configured to split the timeslots in the frame between it and between its "co-channel neighbor" (in our case, with three frequencies, it's with TBS4)[1]. The result for the first co-channel neighbor pair is that TBS1 transmits on half of the time slots, and TBS4 transmits on the other half. See Figure 4-11.

TMU1 is instructed to receive those timeslots that were assigned to TBS1, and ignore others.

Notice that in our example, TBS1 and TBS7 are assigned the same timeslots. This is not a problem because TBS1 and TBS7 are so far away from each other that their mutual signals do not interfere.

Repeat for all co-channel neighbors: This configuration is epeated with TBS2 vs. TBS5, again with TBS3 vs. TBS6, and even with TBS7 vs. TBS4, and so on down the line.

1. *Which TBS receives which timeslots is determined by the CNIndex parameter (see page 4-24)*

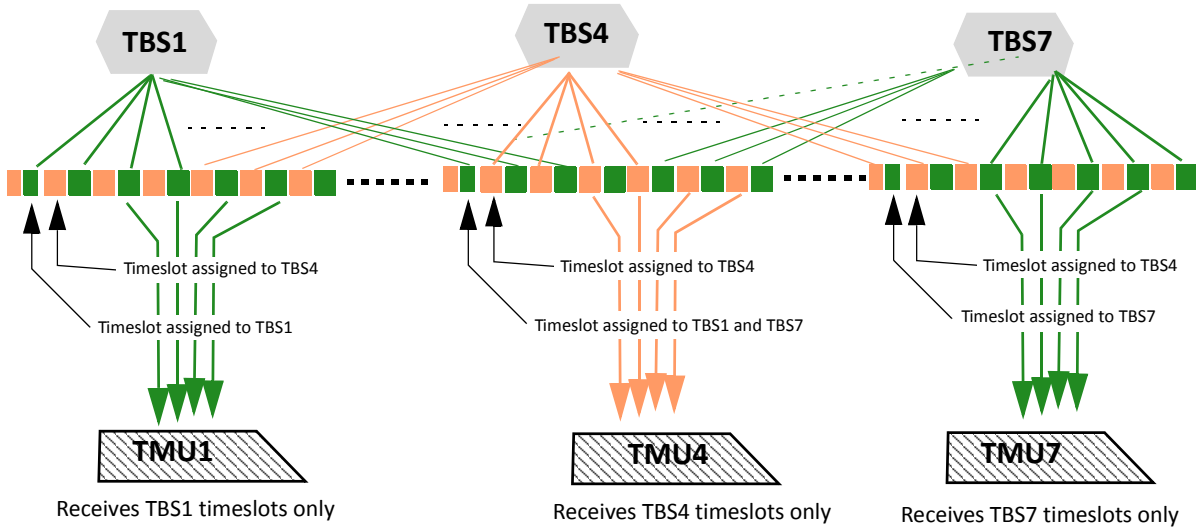

Figure 4-11: Dividing timeslots between co-channel neighbors

This splitting of timeslots is enabled only if the activation conditions described above (see Activation Conditions) are met.

Things can change rapidly, so at the moment the de-activation conditions are met (see De-Activation Conditions), the division of timeslots is no longer carried out.

When the conditions return to the activation conditions, the division of timeslots is renewed.

4.5.4 Configuring the Co-Channel Neighbor Interference Mitigation Option

Configure each TBS for “Co-Channel Neighbor Interference Mitigation” as follows:

5. Open the Configurator.
6. Select the **Main** tab
7. Click **Unprotect**.
8. Enter the password and click **OK.**
9. Select the **Project** tab (see Figure 4-12):

Parameter	Value	Desciption
Product Regulation	FCC	Band Supported
Band	5.730-5.845 GHz FCC/IC	
Channel Bandwidth [MHz]	80	Up to 1 Channels. Non optimal capacity may be achieved in limited capacity products.
Synchronization	ISU	
Desired Tx Ratio (downlink/uplink)	Symmetric (50%/50%)	
Tx Power, HBS [dB]	10	
Tx Power, HMU [dB]	10	
Traps Filter On	Yes	
VLAN Management	no	
Adaptive Modulation Mode	Auto - MIMO/diversity (3x3)	
Write Community	netman	
QoS Mode	None	
Max Distance	1800	Meters
GSU Tx Ratio (downlink/uplink)	Symmetric (50%/50%)	Applicable for backhaul
Base Ethernet Mode	Auto Sense	
Intra Train Handover Operation	Aggregate	
Limited spectrum mode	Reuse 3	equency reuse factor
EHSS jitter mitigation	Disable Reuse 3 Reuse 1 (BP) Reuse 2 Reuse 1	crease EHSS tolerange in case of high track side twork jitter
Network ID		etter repersenting the network
Traps Destinations	10.0.0.200	Up to 10 IP's (comma seperated)
Time Zone	120	Offset in minutes from GMT
Number Of Trains per Base	5	
GPS Antenna Configuration	Integrated	Applicable for TBS
Product	AC	

Figure 4-12: Project Tab: Limited Spectrum Mode

10. Select the **Limited Spectrum Mode** option

11. Choose **Reuse 3** from the pull-down menu. This will instruct the system that you are using 3 frequencies. If you are using 2 frequencies, choose Reuse 2, if you are using 1 frequency, choose Reuse 1.

12.Click the **Towers** tab:

A	B	AA	AJ	AK	AV	AW	AY
General		IP	Frequency	kHz			
No.	Name	ACC-BS			Co channel Neighbors	CoChannelNeighborsIPs	CNIndex
1	BS.01.2.1	10.1.1.1	F1	5475000	BS.01.2.4	10.1.1.4|0|0|0|0|0|	0
2	BS.01.2.2	10.1.1.2	F2	5515000	BS.01.2.5	10.1.1.5|0|0|0|0|0|	0
3	BS.01.2.3	10.1.1.3	F3	5555000	BS.01.2.6	10.1.1.6|0|0|0|0|0|	0
4	BS.01.2.4	10.1.1.4	F1	5475000	BS.01.2.1,BS.01.2.7	10.1.1.1|10.1.1.7|0|0|0|0|	1
5	BS.01.2.5	10.1.1.5	F2	5515000	BS.01.2.2,BS.01.2.8	10.1.1.2|10.1.1.8|0|0|0|0|	1
6	BS.01.2.6	10.1.1.6	F3	5555000	BS.01.2.3,BS.01.2.9	10.1.1.3|10.1.1.9|0|0|0|0|	1
7	BS.01.2.7	10.1.1.7	F1	5475000	BS.01.2.7,BS.01.2.10	10.1.1.7|10.1.1.10|0|0|0|0|	0
8	BS.01.2.8	10.1.1.8	F2	5515000	BS.01.2.8,BS.01.2.11	10.1.1.8|10.1.1.11|0|0|0|0|	0
9	BS.01.2.9	10.1.1.9	F3	5555000	BS.01.2.9,BS.01.2.12	10.1.1.9|10.1.1.12|0|0|0|0|	0
10	BS.01.2.10	10.1.1.10	F1	5475000		0|0|0|0|0|0|	
11	BS.01.2.11	10.1.1.11	F2	5515000		0|0|0|0|0|0|	
12	BS.01.2.12	10.1.1.12	F3	5555000		0|0|0|0|0|0|	
13	BS.01.2.13	10.1.1.13	F1	5475000		0|0|0|0|0|0|	
14	BS.01.2.14	10.1.1.14	F2	5515000		0|0|0|0|0|0|	
15	BS.01.2.15	10.1.1.15	F3	5555000		0|0|0|0|0|0|	
16	BS.01.2.16	10.1.1.16	F1	5475000		0|0|0|0|0|0|	
17	BS.01.2.17	10.1.1.17	F2	5515000		0|0|0|0|0|0|	

Figure 4-13: Towers Tab of the Configurator

- Column A shows the number of each TBS.
- Column B shows the “name” (or serial number) of each TBS.
- Column AA shows the IP address of each TBS.
- Column AJ indicates which frequency (F1, F2, or F3 in our example) is being used for the specific TBS.
- Column AK shows the value of the frequency in kHz.
- Column AV shows the name(s) of the co-channel neighbor(s).
- Column AW shows the IP address(es) of the co-channel neighbor(s).
- Column AY shows the “CNIndex” (which timeslot the indicated TBS is to use).

We can see that in our example, we are re-using F1 through F3

(columns of the Excel sheet not needed have been collapsed for clarity).

13.Record the co-channel neighbor(s) of each TBS as follows:

In column AV (**Co-channel Neighbors**), record the name of the co-channel neighbor TBS(s). If there are two co-channel neighbors, record each neighbor's name separated by a comma (no spaces!), as shown in Figure 4-14:

	A	B	AV	AW	AY
1	General				
2	No.	Name	Co channel Neighbors	CoChannelNeighborsIPs	CNIndex
3	1	BS.01.2.1	BS.01.2.4	10.1.1.4|0|0|0|0|0|	0
4	2	BS.01.2.2	BS.01.2.5	10.1.1.5|0|0|0|0|0|	0
5	3	BS.01.2.3	BS.01.2.6	10.1.1.6|0|0|0|0|0|	0
6	4	BS.01.2.4	BS.01.2.1,BS.01.2.7	10.1.1.1|10.1.1.7|0|0|0|0|	1
7	5	BS.01.2.5	BS.01.2.2,BS.01.2.8	10.1.1.2|10.1.1.8|0|0|0|0|	1
8	6	BS.01.2.6	BS.01.2.3,BS.01.2.9	10.1.1.3|10.1.1.9|0|0|0|0|	1
9	7	BS.01.2.7	BS.01.2.7,BS.01.2.10	10.1.1.7|10.1.1.10|0|0|0|0|	0
10	8	BS.01.2.8	BS.01.2.8,BS.01.2.11	10.1.1.8|10.1.1.11|0|0|0|0|	0
11	9	BS.01.2.9	BS.01.2.9,BS.01.2.12	10.1.1.9|10.1.1.12|0|0|0|0|	0
12	10	BS.01.2.10		0|0|0|0|0|0|	
13	11	BS.01.2.11		0|0|0|0|0|0|	
14	12	BS.01.2.12		0|0|0|0|0|0|	
15	13	BS.01.2.13		0|0|0|0|0|0|	
16	14	BS.01.2.14		0|0|0|0|0|0|	
17	15	BS.01.2.15		0|0|0|0|0|0|	
18	16	BS.01.2.16		0|0|0|0|0|0|	
19	17	BS.01.2.17		0|0|0|0|0|0|	
20	18	BS.01.2.18		0|0|0|0|0|0|	
21	19	BS.01.2.19		0|0|0|0|0|0|	
22	20	BS.01.2.20		0|0|0|0|0|0|	

Figure 4-14: Recording Co-Channel Neighbors

The IP address(es) of the co-channel neighbor(s) appear automatically in column AW.

In our example, the co-channel neighbor of TBS1 (BS.01.2.1) is BS.01.2.4, that of TBS2 (BS.01.2.2) is BS.01.2.5, and of TBS3 (BS.01.2.3) is BS.01.2.6.

Starting from TBS4, each TBS has two co-channel neighbors: the neighbors of TBS4 (BS.01.2.4) are TBS1 (BS.01.2.1) and TBS7 (BS.01.2.7), and so on.

This pattern will repeat itself until the end of the line. The last three TBSs at the end of the line, like the first three, will have only one co-channel neighbor.

14. Complete recording all of the co-channel neighbors for all TBSs in the specific line (we have only recorded up to TBS9 in our example).

15. In column AY, record the **CNIndex**: This indicates which TBS will use which timeslots in the frame - the first part or the second part (see also Figure 4-11). Record 0 for the TBSs that will use the first part, and 1 for the TBS that will use the second part.

    In our example, TBS 1,2, and 3 use the first part of the timeslots in the frame (0 is recorded), while TBS 4,5, and 6 use the second part of the timeslots. For TBS 7,8, and 9, they again use the first part of the timeslots (so, for instance TBS4 always uses a different part of the frame than its co-channel neighbor: CNIndex 1 vs. CNIndex 0 for TBS1 and for TBS7). The pattern repeats itself until the end of the line.

16. Once you have entered all the necessary information, select the **Main** tab.
17. Click **Recalc all data** to update the system with the changes you have made, and save the file.

4.6 Configuring Network Units

Configuring an Individual Unit:

To configure individual network units one at a time (TBS, TMU, and ISUs can be configured), click **Configure Unit** on the **Main** tab of the Configurator. This opens the Configurator dialog box. See sections see 4.6.1 on page 4-25 through see 4.6.3 on page page 4-29 for details on working with the Configurator dialog box.

Configuring Many Units at Once:

You can configure all the TBS units in the line, as determined by the value in the **Line** window. Do this by clicking the **HBS Batch Configuration** button. This will take all of the parameter values that are in this file for the specific line, and apply them to all of the TBS units defined in the line. Connection is carried out according to the IP addresses as appear in this file.

Note

Configure all network units before you install them in the field.

4.6.1 Configuring Transportation Base Stations (TBSs)

Use this procedure to carry out changes in the configuration parameters of the TBSs. This includes changing or setting its IP address.

1. For a first-time configuration, connect the TBS's PoE socket to a PoE device (see Site Installation for connection instructions), and in turn, connect the PoE device to your laptop or a LAN connection.

   For a re-configuration of a TBS already installed in the field, you can rely on your network's connection.

2. Run the Configurator.
3. From the **Main** tab, click the **Line** pull-down menu and select the line on which the TBS is defined (see Figure 4-2).
4. From the **Download Software** pull-down menu, select the appropriate configuration option (see page 4-4 for a description of these options).
5. Click **Configure Unit**. The following window will appear:

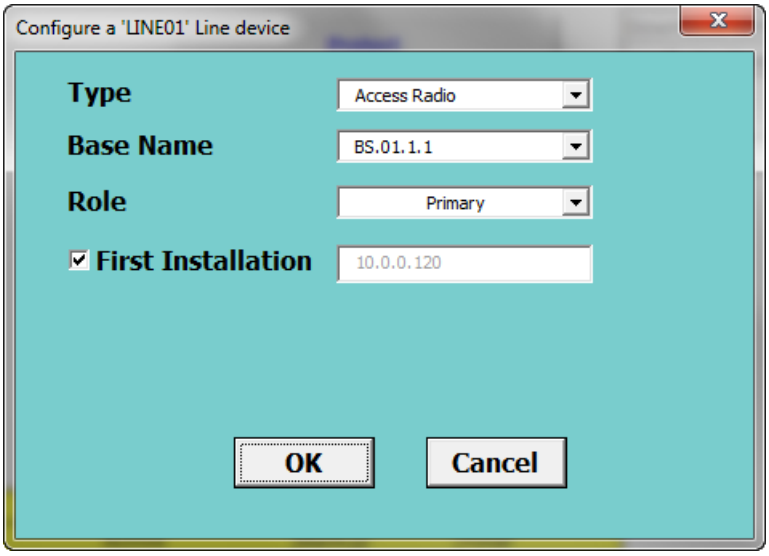

Figure 4-15: TBS - First time Installation

Note

The background color of the device configuration window is the same color as that defined in **Line** tab, **Name** column.

6. **Type**: Select the radio type - Access Radio, as shown in Figure 4-15.
7. **Base Name**: Select the name of the unit. This name is associated with various parameter values in the Configurator file. These parameters will be downloaded to the unit whose IP address appears in the **First Installation** window. A list of these names are taken from those defined in the **Towers** tab, and come from the selected line only.
8. **Role**: Leave this setting as Primary.
9. **First Installation:** For a first-time installation, leave this option selected so the default IP address will appear. The parameters will be downloaded to the unit with this IP address.
10. Click **OK** to complete the configuration. The Configurator will take the parameters associated with the selected Base Name as well as other parameters associated with its line, and download them to the unit whose IP address is shown in the **First Installation** window.

It may take about a minute to complete. You will receive one of the completion messages described in Configurator Messages below.

To re-configure a unit that is already installed:

1. Repeat Steps see 1. through see 8. above, relying on your network's connection to the unit.
2. Remove the checkmark from **First Installation**, and enter the IP address of the unit you wish to re-configure:

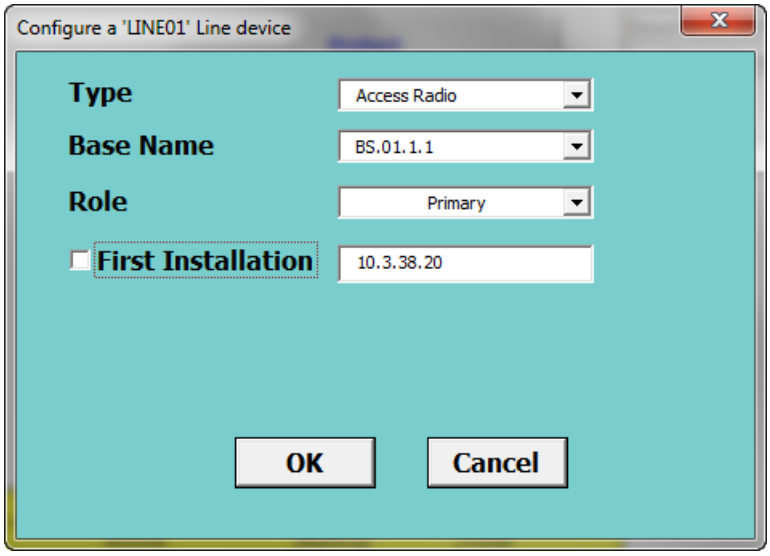

Figure 4-16: TBS - Re-configuration

3. Click **OK**. The Configurator will take the parameters associated with this name as well as other parameters associated with its line, and download them to the unit whose IP address appears in the **First Installation** window.

   It may take about a minute to complete. You will receive one of the completion messages described in Configurator Messages below.

4.6.2 Configuring Transportation Mobile Units (TMUs)

Use this procedure to carry out changes in the configuration parameters of the TMUs. This includes changing or setting its IP address.

Caution

Since TMUs are usually mobile, make sure these devices will be in continuous contact during the configuration process. Our recommended “best practice” is to find an opportunity when the TMU to be configured is immobile.

1. For a first-time configuration, connect the TMU’s PoE socket to a PoE device (see Site Installation for connection instructions), and in turn, connect the PoE device to your laptop or a LAN connection.

   For a re-configuration of a TMU already installed in the field, you can rely on your network’s connection.

2. Run the Configurator.
3. From the **Main** tab, click the **Line** pull-down menu and select the line on which the TMU is defined (see Figure 4-2).
4. From the **Download Software** pull-down menu, select the appropriate configuration option (see page 4-4 for a description of these options).
5. Click **Configure Unit**. The following window will appear:

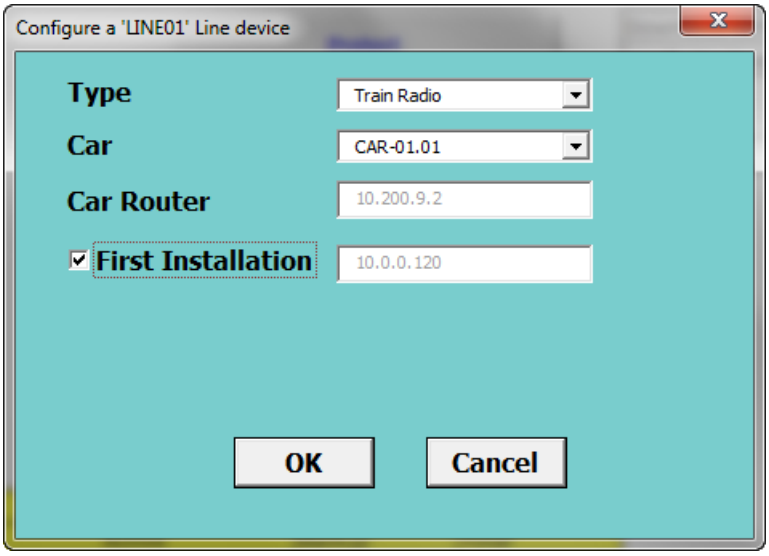

Figure 4-17: TMU - First time Installation

6. **Type**: Select the radio type - Train Radio, as shown in Figure 4-17.
7. **Car**: Select the name of the train car on which the unit is to be installed. A list of these names are taken from those defined in the **Trains** tab, **Car** column, and come from the selected line only.
8. **Car Router**: This shows the IP address of the router on the selected train car. this IP address is defined in the **Trains** tab, **Car Router IP** column.
9. **First Installation:** For a first-time installation, leave this option selected so the default IP address will appear. The parameters will be downloaded to the unit with this IP address.
10. Click **OK** to complete the configuration. The Configurator will take the parameters associated with the selected **Car** name, as well as other parameters associated with its line, and download them to the unit whose IP address is shown in the **First Installation** window.

It may take about a minute to complete. You will receive one of the completion messages described in Configurator Messages below.

To re-configure a unit that is already installed in the field:

1. Repeat Steps see 1. through see 8. above, relying on your network's connection to the unit.
2. Remove the checkmark from **First Installation**, and enter the IP address of the unit you wish to re-configure. Note that the correct IP address of the **Car Router** will appear.

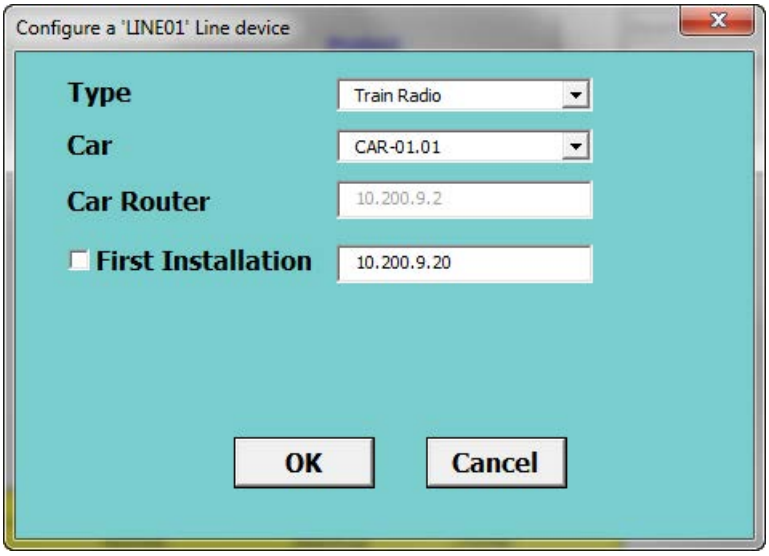

Figure 4-18: TMU - Re-configuration

3. Click **OK**. The Configurator will take the parameters associated with the unit of this name, and download them to the unit whose IP address appears in the **First Installation** window.

   It may take about a minute to complete. You will receive one of the completion messages described in Configurator Messages below.

4.6.3 Configuring Indoor Synchronization Units (ISUs)

Use this procedure to carry out changes in the configuration parameters of the ISUs. This includes changing or setting its IP address.

1. For a first-time configuration, connect the ISU's **sync** socket to your laptop or to a LAN connection. Connect AC power to its power input. See Site Installation for connection instructions.

   For a re-configuration of an ISU already installed in the field, you can rely on your network's connection.

2. Run the Configurator.
3. From the **Main** tab, click the **Line** pull-down menu and select the line on which the ISU is defined (see Figure 4-2).
4. From the **Download Software** pull-down menu, select the appropriate configuration option (see page 4-4 for a description of these options).
5. Click **Configure Unit**. The following window will appear:

Figure 4-19: ISU - First time installation

6. **Type**: Select the unit type - Line sync Unit (ISU), as shown in Figure 4-19.
7. **Unit Name**: The name of the unit which has the associated parameter values. This name consists of ISU.LineNumber. A list of these names are taken from those defined in the **Line** tab.
8. **Role**: Select the role of the ISU. This is either Primary or Secondary. See the **Line** tab: **ISU IP**, and **Backup ISU IP** for definitions of their IP addresses.
9. **First Installation:** For a first-time installation, leave this option selected so the default IP address will appear. The parameters will be downloaded to the unit with this IP address.
10. Click **OK** to complete the configuration. The Configurator will take the parameters associated with the selected line, and download them to the unit whose IP address is shown in the **First Installation** window.

It may take about a minute to complete. You will receive one of the completion messages described in Configurator Messages below.

To re-configure a unit that is already installed in the field:

1. Repeat Steps see 1. through see 8. above, relying on your network's connection to the unit.
2. Remove the checkmark from **First Installation**, and enter the IP address of the unit you wish to re-configure.

Figure 4-20: ISU - Re-configuration

3. Click **OK** to complete the configuration. It may take about a minute to complete. You will receive one of the completion messages described in Configurator Messages below.

4.7 Configurator Messages

Table 4-5: Configurator Message Color Codes

Color Code	Meaning	Action Required
Red	Operation failed	Varies with message
Yellow	OK	Repeat the operation
Green	OK	Operation successful

Table 4-6: Configurator Messages

Color Code	Message	Action Required
	Can't find Configuration	Contact supplier
	Can't log into device. Check password	
	Failed to get device configuration	
	No connection with Device	Ping, then check physical connection. If all fails, replace the device.
	Permission Error	Contact supplier
	Script Error	
	Telnet Connection to the device failed	Ping, then check physical connection. If all fails, replace the device.
	Wrong Product Connected	Check for mix-up - TMU for TBS or vice versa
	Please run again to complete.	Repeat this configuration - this may occur during a software upgrade.
	Configuration completed - Device restarting...	None
	Configuration completed - Please restart device.	Log in with Telnet and use the reboot command (See below)

If you are asked to restart the device, log in to it with telnet following this example:

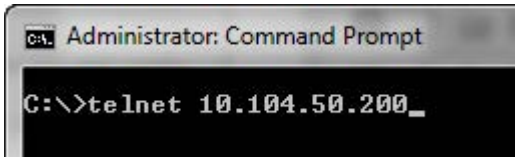

Figure 4-21: Logging in to an TBS with Telnet

The user name and password are respectively, ***admin*** and ***netman***.

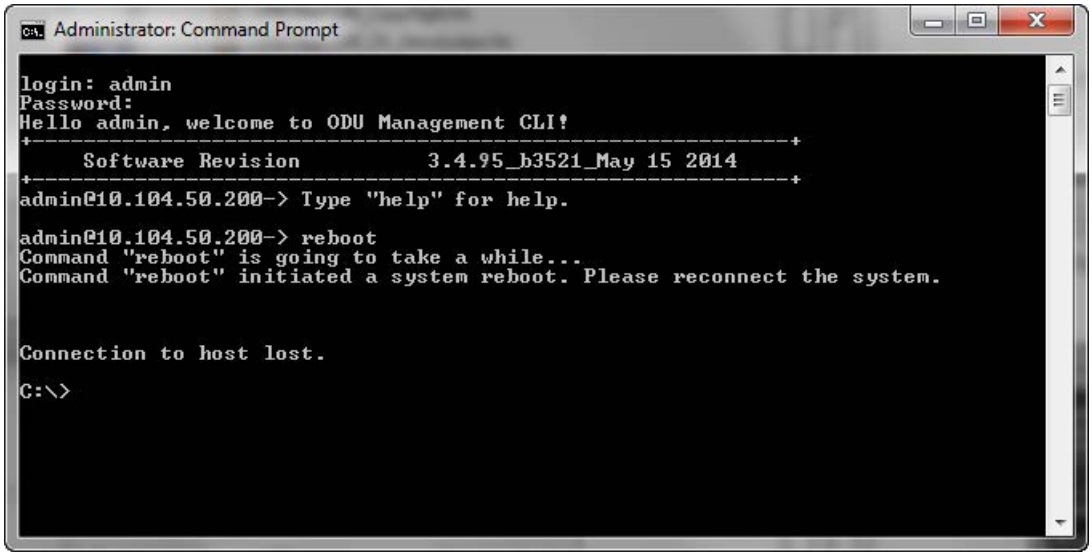

Figure 4-22: Using the Telnet reboot command to reset an TBS

Here is an example:

Table 4-7: Radio Inventory

ABC Metro Radio Inventory			
Radio Type	**Active**	**Backup**	**Total**
Base Radios	158	0	158
Train Radios	298	0	298
Sync Unit (ISU)	4	4	8

Table 4-8: Distribution of Radio Inventory across lines

Line	Name	Base	Train
5	Line01	64	126
8	Line02	8	20
11	Line03	38	68
1	Line04	48	84
Total		158	298

Appendix A: Antenna Guidelines

A.1 For Deployment in US/Canada

The TBS and TMU devices bear the following identifications on their label:

Contains FCC ID: Q3K-5XACMOD3C

Contains IC: 5100A-5XACMD3CN

Only the antennas shown in the table below or antennas of the same type with lower gain are approved for use in this system. The antennas must be installed so as to provide a minimum separation distance from bystanders as specified in the table below:

Table A-1: Approved Antennas

Cat. No.	Type	Gain (dBi)	Dir BW	Freq. Band (MHz)	Tx Power per Chain	Min. Safe Distance (cm)
RW-9105-5158	Dual Polarization-Directional	19.0	17.0°	5728-5850	12.0	78.0
RW-9401-5002	Vehicular Single-directional	12.5	50.0°	5728-5850	18.5	37.0
AT0058760	Single Polarization-Directional	18.0	18.0°	5728-5850	13.0	70.0
RW-9061-5001	Dual Polarization-Sectorial	14.0	90.0°	5728-5850	17.0	44.0
RW-9061-5002	Dual Polarization-Sectorial	16.5	60.0°	5728-5850	14.5	59.0
RW-9061-5004	Dual Polarization-Sectorial	11.0	120.0°	5728-5850	20.0	31.0
RW-9314-5158	Yagi	14.0	30.0°	5728-5850	17.0	44.0

Table A-1: Approved Antennas (Continued)

Cat. No.	Type	Gain (dBi)	Dir BW	Freq. Band (MHz)	Tx Power per Chain	Min. Safe Distance (cm)
RW-9401-5004	Vehicular Bi-directional	13.0	36.0°	5728-5850	18.0	39.0
RW-9401-5007	Omni-directional	10.0	360.0°	5728-5850	21.0	28.0
RW-9401-5158	Omni-directional	5.5	360.0°	5728-5850	25.5	17.0
RW-9402-5001	Omni-directional	10.0	360.0°	5728-5850	21.0	28.0
RW-9402-5004	Omni-directional	12.0	360.0°	5728-5850	19.0	35.0
RW-9521-4958	Single Polarization-Sectorial	17.0	60.0°	5728-5850	14.0	62.0
RW-9531-5001	Single Polarization-Sectorial	15.0	120.0°	5728-5850	16.0	50.0
RW-9531-5002	Single Polarization-Sectorial	17.0	90.0°	5728-5850	14.0	62.0

Regulatory Compliance

General Note

This system has achieved Type Approval in various countries around the world. This means that the system has been tested against various local technical regulations and found to comply. The frequency bands in which the system operates may be “unlicensed” and in these bands, the system can be used provided it does not cause interference.

FCC/ISED - Compliance

This equipment has been tested and found to comply with the limits for a Class B digital device, pursuant to Part 15 of the FCC Rules. These limits are designed to provide reasonable protection against harmful interference in a residential installation. This equipment generates, uses and can radiate radio frequency energy and, if not installed and used in accordance with the instructions, may cause harmful interference to radio communications. However, there is no guarantee that interference will not occur in a particular installation. If this equipment does cause harmful interference to radio or television reception, which can be determined by turning the equipment off and on, the user is encouraged to try to correct the interference by one or more of the following measures:

- Reorient or relocate the receiving antenna.
- Increase the separation between the equipment and receiver.
- Connect the equipment into an outlet on a circuit different from that to which the receiver is connected.

Consult the dealer or an experienced radio/TV technician for help.

Changes or modifications to this equipment not expressly approved by the party responsible for compliance could void the user's authority to operate the equipment.

RF Exposure

It is recommended to keep a safe distance of 78 cm from the radiating antenna when operating in the US and 79 cm when operating in Canada.

Exposition RF

Il est recommandé de garder une distance de sécurité de 78 cm de l'antenne rayonnante lorsqu'elle fonctionne aux États?Unis et de 79 cm lorsqu'elle fonctionne au Canada

Warning

It is the responsibility of the installer to ensure that when using the outdoor antenna kits in the United States (or where FCC rules apply), only those antennas certified with the product are used. The use of any antenna other than those certified with the product is expressly forbidden by FCC rules 47 CFR part 15.204.

Warning

It is the responsibility of the installer to ensure that when configuring the radio in the United States (or where FCC rules apply), the Tx power is set according to the values for which the product is certified. The use of Tx power values other than those, for which the product is certified, is expressly forbidden by FCC rules 47 CFR part 15.204.

Caution

Outdoor units and antennas should be installed ONLY by experienced installation professionals who are familiar with local building and safety codes and, wherever applicable, are licensed by the appropriate government regulatory authorities. Failure to do so may void the product warranty and may expose the end user or the service provider to legal and financial liabilities. Resellers or distributors of this equipment are not liable for injury, damage or violation of regulations associated with the installation of outdoor units or antennas. The installer should configure the output power level of antennas according to country regulations and antenna type.

Warning

- Where Outdoor units are configurable by software to Tx power values other than those for which the product is certified, it is the responsibility of the Professional Installer to restrict the Tx power to the certified limits.
- This product was tested with special accessories - indoor unit (IDU or PoE), FTP CAT-5e shielded cable with sealing gasket, 10 AWG grounding cable - which must be used with the unit to insure compliance.

Indoor Units comply with part 15 of the FCC rules. Operation is subject to the following two conditions:

(1) These devices may not cause harmful interference.

(2) These devices must accept any interference received, including interference that may cause undesired operation.

Canadian Emission Requirements for Indoor Units

This Class B digital apparatus complies with Canadian ICES-003.

Cet appareil numẻrique de la classe B est conforme ả la norme NMB-003 du Canada.

China MII

Operation of the equipment is only allowed under China MII 5.8GHz band regulation configuration with EIRP limited to 33 dBm (2 Watt).

India WPC

Operation of the equipment is only allowed under India WPC GSR-38 for 5.8GHz band regulation configuration.

Unregulated

In countries where the radio is not regulated the equipment can be operated in any regulation configuration, best results will be obtained using Universal regulation configuration.

Safety Practices

Applicable requirements of National Electrical Code (NEC), NFPA 70; and the National Electrical Safety Code, ANSI/IEEE C2, must be considered during installation.

NOTES:

1. A Primary Protector is not required to protect the exposed wiring as long as the exposed wiring length is limited to less than or equal to 140 feet, and instructions are provided to avoid exposure of wiring to accidental contact with lightning and power conductors in accordance with NEC Sections 725-54 (c) and 800-30.

In all other cases, an appropriate Listed Primary Protector must be provided. Refer to Articles 800 and 810 of the NEC for details.

2. For protection of ODU against direct lightning strikes, appropriate requirements of NFPA 780 should be considered in addition to NEC.

3. For Canada, appropriate requirements of the CEC 22.1 including Section 60 and additional requirements of CAN/CSA-B72 must be considered as applicable.

Transportation FiberinMotion

Deployment Guide

Notice

This handbook contains information that is proprietary to RADWIN Ltd (RADWIN hereafter). No part of this publication may be reproduced in any form whatsoever without prior written approval by RADWIN.

Right, title and interest, all information, copyrights, patents, know-how, trade secrets and other intellectual property or other proprietary rights relating to this handbook and to the RADWIN products and any software components contained therein are proprietary products of RADWIN protected under international copyright law and shall be and remain solely with RADWIN.

The RADWIN name is a registered trademark of RADWIN. No right, license, or interest to such trademark is granted hereunder, and you agree that no such right, license, or interest shall be asserted by you with respect to such trademark.

You shall not copy, reverse compile or reverse assemble all or any portion of the Deployment Guide or any other RADWIN documentation or products. You are prohibited from, and shall not, directly or indirectly, develop, market, distribute, license, or sell any product that supports substantially similar functionality based or derived in any way from RADWIN products.Your undertaking in this paragraph shall survive the termination of this Agreement.

This Agreement is effective upon your opening of a RADWIN product package and shall continue until terminated. RADWIN may terminate this Agreement upon the breach by you of any term thereof. Upon such termination by RADWIN, you agree to return to RADWIN any RADWIN products and documentation and all copies and portions thereof.

For further information contact RADWIN at one of the addresses under **Worldwide Contacts** below or contact your local distributor.

Disclaimer

The parameters quoted in this document must be specifically confirmed in writing before they become applicable to any particular order or contract. RADWIN reserves the right to make alterations or amendments to the detail specification at its discretion. The publication of information in this document does not imply freedom from patent or other rights of RADWIN, or others.

Trademarks

WinLink 1000, RADWIN 2000, **RADWIN 5000**, **RADWIN 6000**, **RADWIN 600** and **FiberinMotion** are trademarks of RADWIN Ltd.

Windows 2000, XP Pro, Vista, Windows 7 and **Internet Explorer** are trademarks of Microsoft Inc.

Mozilla and **Firefox** are trademarks of the Mozilla Foundation.

RADWIN