INSTALLATION GUIDE

DQ0266070/A.01

TRANSPORTATION FIBERINMOTION

Rel. 4.5.25

RADWIN

FOR REGULATORY REVIEW

Table of Contents

Chapter 1: Introduction

1.1 Scope of this Document 1-1
1.2 Transportation FiberinMotion Overview 1-1
1.2.1 Major Components 1-4
TBS 1-4
TBS antennas 1-4
TMU 1-5
TMU antennas 1-6
ISU 1-6
OSU 1-7
GSU 1-8
1.2.2 Accessories 1-8
Lightning Protection Unit (LPU) 1-8
PoE 1-9
1.2.3 Synchronization 1-9
1.3 Features 1-10
1.3.1 General 1-10
1.3.2 Mobility Capabilities 1-10
1.3.3 Onboard Mobile Units 1-10
1.4 Document Notifications 1-10

Chapter 2: Site Installation

2.1 Scope of This Chapter 2-1
2.2 Wayside 2-1
2.2.1 Overview 2-1
General Mounting Arrangement 2-1
Power 2-3
Minimum Recommended Distances 2-3
2.2.2 TBS Mounting 2-4
TBS Mounting on a Vertical Pole 2-6
TBS Mounting on a Horizontal Pole 2-9
TBS mounting on a wall 2-13
2.2.3 PoE Devices for the TBS 2-16
2.2.4 TBS Antennas 2-17
TBS Antenna Mounting on a Vertical Pole 2-17
TBS Antenna Mounting on a Horizontal Pole 2-20
TBS Antenna Mounting on a Wall 2-21
TBS Antenna Mounting Kit Adaptor 2-21
2.2.5 TBS External Connections 2-24
2.2.6 Synchronization Units 2-25
Indoor Synchronization Unit (ISU) 2-25
Outdoor Synchronization Unit (OSU) 2-26
GSU 2-28
2.2.7 External GPS Antenna 2-29
2.2.8 Lightning Protection Unit (LPU) 2-30
2.2.9 Waterproofing 2-33
2.3 On-board 2-34
2.3.1 Overview 2-34
General Guidelines 2-34
Power 2-34
General Mounting Arrangement 2-34
2.3.2 TMU Mounting 2-35

FOR REGULATORY REVIEW

TMU Mounting on a Shelf....2-35
TMU Mounting on a Wall....2-36
TMU Mounting Using the TMU-PoE Drawer....2-37
2.3.3 PoE for the TMU.... 2-46
Mounting on a DIN rail 2-46
2.3.4 TMU Antennas 2-47
TMU - TBS antenna alternative orientation options 2-48
2.3.5 TMU External Connections.... 2-51
2.4 Grounding.... 2-51
TBS and OSU 2-52
TMU 2-52
FinM PoE 2-53
GSU 2-54
External PoE 2-54
ISU 2-55
Appendix A: Antenna Guidelines
A.1 For Deployment in USA/Canada A-1
A.2 For Deployment in Japan A-4
Appendix B: Terminology
Appendix C: Revision History

FOR REGULATORY REVIEW

List of Figures

Figure 1-1 FiberinMotion Overview 1-2
Figure 1-2 FiberinMotion Overview - Internal On-board view 1-3
Figure 1-3 TBS unit 1-4
Figure 1-4 TBS antenna 1-4
Figure 1-5 TMU radio 1-5
Figure 1-6 Shark-fin antenna for TMU 1-6
Figure 1-7 Indoor Synchronization Unit 1-6
Figure 1-8 Outdoor Synchronization Unit 1-7
Figure 1-9 GPS Synchronization Unit 1-8
Figure 1-10 Lightning Protection Unit (LPU) 1-8
Figure 1-11 PoE Units 1-9
Figure 2-1 TBS - Base Station mounting with antennas (outside) 2-2
Figure 2-2 TBS - Base Station mounting with antennas (tunnel) 2-3
Figure 2-3 TBS antennas - lowest antennas higher than the highest rail car 2-3
Figure 2-4 TBS mounting kit package contents 2-4
Figure 2-5 Fasten standoffs to base plate (for vertical pole) 2-6
Figure 2-6 Fasten TBS to base plate (for vertical pole) 2-6
Figure 2-7 Thin pole: Fasten clamp to base plate 2-7
Figure 2-8 Thin pole: Do not completely tighten bolts 2-7
Figure 2-9 Thin pole: Rotate clamp 2-7
Figure 2-10 Thin pole: tighten bolts 2-7
Figure 2-11 Medium pole: Fasten clamp to base plate 2-8
Figure 2-12 Medium pole: Do not completely tighten bolts 2-8
Figure 2-13 Medium pole: Rotate clamp 2-8
Figure 2-14 Medium pole: tighten bolts 2-8
Figure 2-15 Using worm drive clamps for a thick pole 2-9
Figure 2-16 Using U-bolts for a thick pole 2-9
Figure 2-17 Rotate base plate clockwise 90o for horizontal pole 2-10
Figure 2-18 Fasten standoffs to base plate (for horizontal pole) 2-10
Figure 2-19 Fasten TBS to base plate (for horizontal pole) 2-11
Figure 2-20 Thin pole: Fasten clamp to base plate 2-11
Figure 2-21 Thin pole: Do not completely tighten bolts 2-11
Figure 2-22 Thin pole: Rotate clamp 2-12
Figure 2-23 Thin pole: tighten bolts 2-12
Figure 2-24 Medium pole: Fasten clamp to base plate 2-12
Figure 2-25 Medium pole: Do not completely tighten bolts 2-12
Figure 2-26 Medium pole: Rotate clamp 2-13
Figure 2-27 Medium pole: tighten bolts 2-13
Figure 2-28 Using metal bands for a large pole 2-13
Figure 2-29 Using U-bolts for a large pole 2-13
Figure 2-30 Fasten standoffs to base plate 2-14
Figure 2-31 Standoffs fastened to base plate 2-14
Figure 2-32 Attach base plate to wall 2-15
Figure 2-33 Fasten TBS to base plate on wall 2-15
Figure 2-34 TBS mounted on a wall 2-16
Figure 2-35 PoE external connections 2-16

FOR REGULATORY REVIEW

Figure 2-36 Antenna Mounting Kit Contents 2-17
Figure 2-37 Connect Pole Clamp to Radio Holder 2-18
Figure 2-38 Tighten bolts 2-18
Figure 2-39 Rotate Clamp and tighten bolts 2-18
Figure 2-40 Mounting Kit on thin pole 2-18
Figure 2-41 Connect Pole Clamp to Radio Holder 2-19
Figure 2-42 Tighten bolts 2-19
Figure 2-43 Rotate Clamp and tighten bolts 2-19
Figure 2-44 Mounting Kit on pole 2-19
Figure 2-45 Mounting kit on a thick pole 2-20
Figure 2-46 Mounting kit on a horizontal pole 2-20
Figure 2-47 Flat panel antenna mounting kit adapter 2-21
Figure 2-48 Flat Panel Antenna - straight mount 2-22
Figure 2-49 Flat Panel Antenna - diagonal mount 2-22
Figure 2-50 Flat Panel antenna - straight-mounted on a pole 2-23
Figure 2-51 Flat Panel antenna - diagonal-mounted on a pole 2-23
Figure 2-52 TBS external connections 2-24
Figure 2-53 Indoor Synchronization Unit (ISU) 2-25
Figure 2-54 OSU external connections 2-26
Figure 2-55 Mounted GSUs 2-28
Figure 2-56 GSU External connections 2-28
Figure 2-57 GPS antenna and mount 2-29
Figure 2-58 Lightning Protection Unit (LPU) 2-30
Figure 2-59 Basic use of lightning protector units 2-30
Figure 2-60 LPU: Bottom View 2-31
Figure 2-61 LPU: Side View 2-31
Figure 2-62 LPU attached to pole with metal tie 2-31
Figure 2-63 Connecting cables to the LPU (1) 2-32
Figure 2-64 Connecting cables to the LPU (2) 2-32
Figure 2-65 Installing an LPU on a pole (side view) 2-32
Figure 2-66 Exposing the tacky side of the sealing tape 2-33
Figure 2-67 Waterproofing an external connection 2-33
Figure 2-68 On-board general mounting arrangement 2-34
Figure 2-69 On-board general mounting arrangement - detail view 2-35
Figure 2-70 TMU mounted on a shelf 2-36
Figure 2-71 TMU and PoE mounted on a wall 2-36
Figure 2-72 TMU-PoE drawer contents 2-38
Figure 2-73 Remove the mounting slides from the TMU-PoE drawer. 2-39
Figure 2-74 Measure distance between vertical rails 2-40
Figure 2-75 Adjust distance of rear mounting flange 2-40
Figure 2-76 Adjust distance of mounting flange on second slide 2-41
Figure 2-77 Inserting cage nuts (one side shown) 2-41
Figure 2-78 Placing and fastening mounting slide 2-42
Figure 2-79 Inserting the drawer: Place arms straight 2-43
Figure 2-80 Inserting the drawer: Push ball-bearing housings outwards 2-43
Figure 2-81 Inserting the drawer: Release locking levers 2-44
Figure 2-82 Secure drawer to the front side of rack 2-44
Figure 2-83 Attaching PoE to drawer 2-45
Figure 2-84 Attaching TMU to drawer 2-46
Figure 2-85 Attaching a DIN rail adaptor to the PoE 2-47

FOR REGULATORY REVIEW

Figure 2-86 Attaching a PoE to a DIN rack 2-47
Figure 2-87 “Shark-Fin” antenna - bottom and top views 2-48
Figure 2-88 TMU antenna mounting configuration on roof 2-48
Figure 2-89 Antenna Orientation Options 2-49
Figure 2-90 TMU antenna port connection scheme 2-50
Figure 2-91 Connect RF cable to TMU antenna (on mount) 2-50
Figure 2-92 TMU - External Connections 2-51
Figure 2-93 TBS/OSU: Grounding lug location 2-52
Figure 2-94 TMU: Grounding lug location 2-53
Figure 2-95 PoE: Grounding lug location 2-53
Figure 2-96 GSU: Grounding lug location 2-54
Figure 2-97 PoE: Grounding lug location 2-54
Figure 2-98 ISU: Grounding lug location 2-55
Figure A-1 Approved Antennas 5150-5250 MHz Band ISED Base Station (low power - indoor) A-3

FOR REGULATORY REVIEW

Chapter 1: Introduction

1.1 Scope of this Document

This document shows how to install RADWIN's Transportation FiberinMotion (FiberinMotion or FinM) solution.

This publication is addressed primarily to installing technicians.

- For guidelines of the Transportation FiberinMotion network, see the FinM Network Guidelines.
- For a description of how to configure and operate the Transportation FiberinMotion solution, see the FinM Configuration Guide

1.2 Transportation FiberinMotion Overview

Transportation FiberinMotion is a train-to-wayside communications solution that ensures continuous high-speed wireless connectivity between the rolling stock, the tracks and control center.

The Transportation FiberinMotion system consists of powerful base stations deployed along the tracks that connect to mobile units installed onboard the rolling stock. The solution operates in challenging outdoor conditions and underground tunnels.

FOR REGULATORY REVIEW

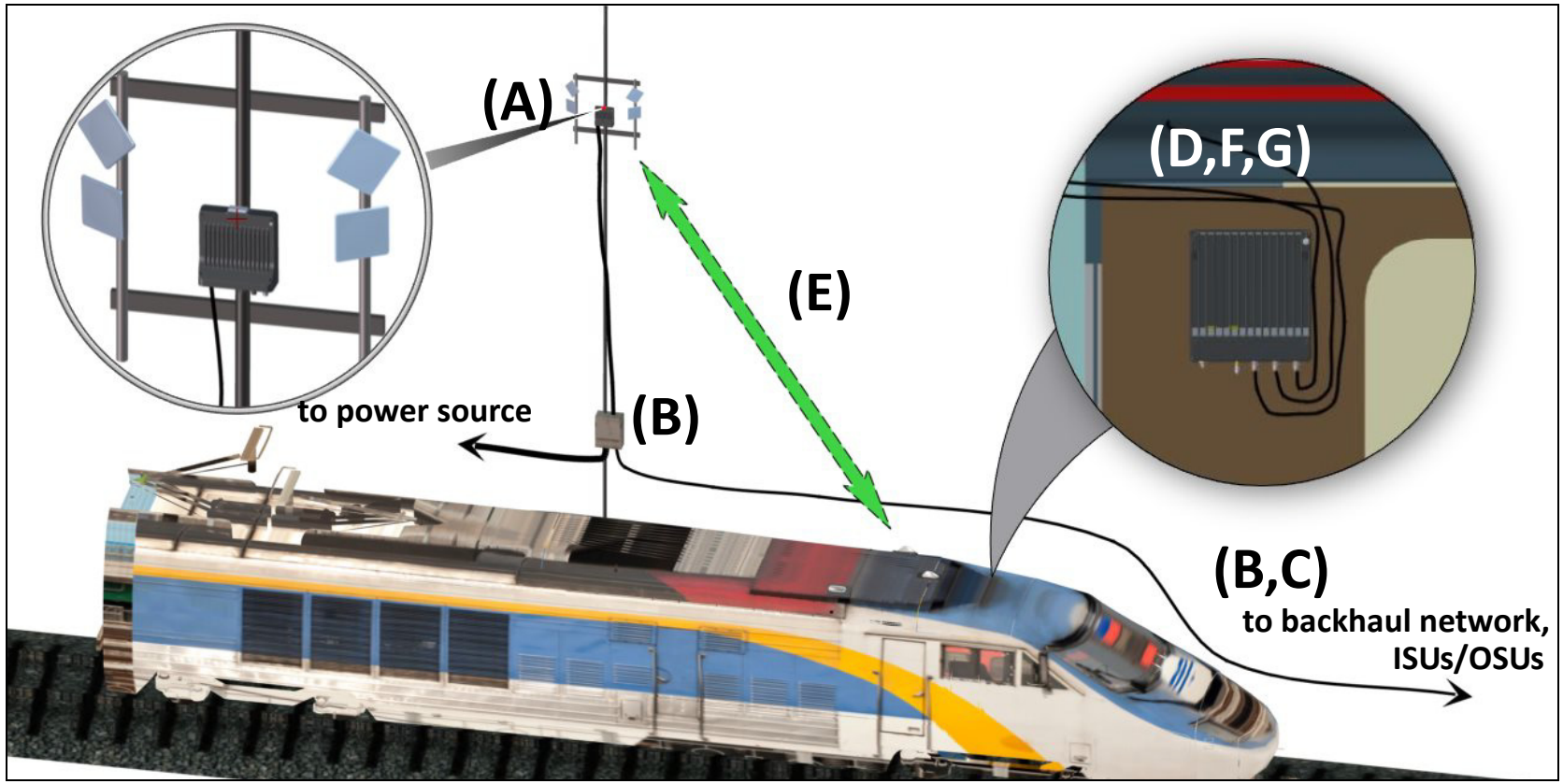

Figure 1-1: FiberinMotion Overview

The FiberinMotion solution works as follows:

A. TBS (Transportation Base Station) units are installed on poles or walls, and are equipped with antennas (usually 4).

B. The TBS units are connected to the backhaul network (Gigabit ethernet via RJ45 or fiber optic) and power,

C. All TBS units are synchronized to the same clock source.

FOR REGULATORY REVIEW

D. TMUs (Transportation Mobile Units) are installed on board rolling stock, and are equipped with antennas (usually 3, installed on the roof). One TMU is installed in the front and another in the rear most compartment of the train.

E. The TBS units transmit to/receive from TMUs that are located within its beam.

F. The TMU radios are powered by PoE devices or are powered directly by an on-board switch that can provide PoE-plus (802.3.at) connection.

G. The TMU radios are connected to an on-board network (recommended speed 1Gbps), which enables connectivity between the two TMUs, as well as connection to other on-board devices.

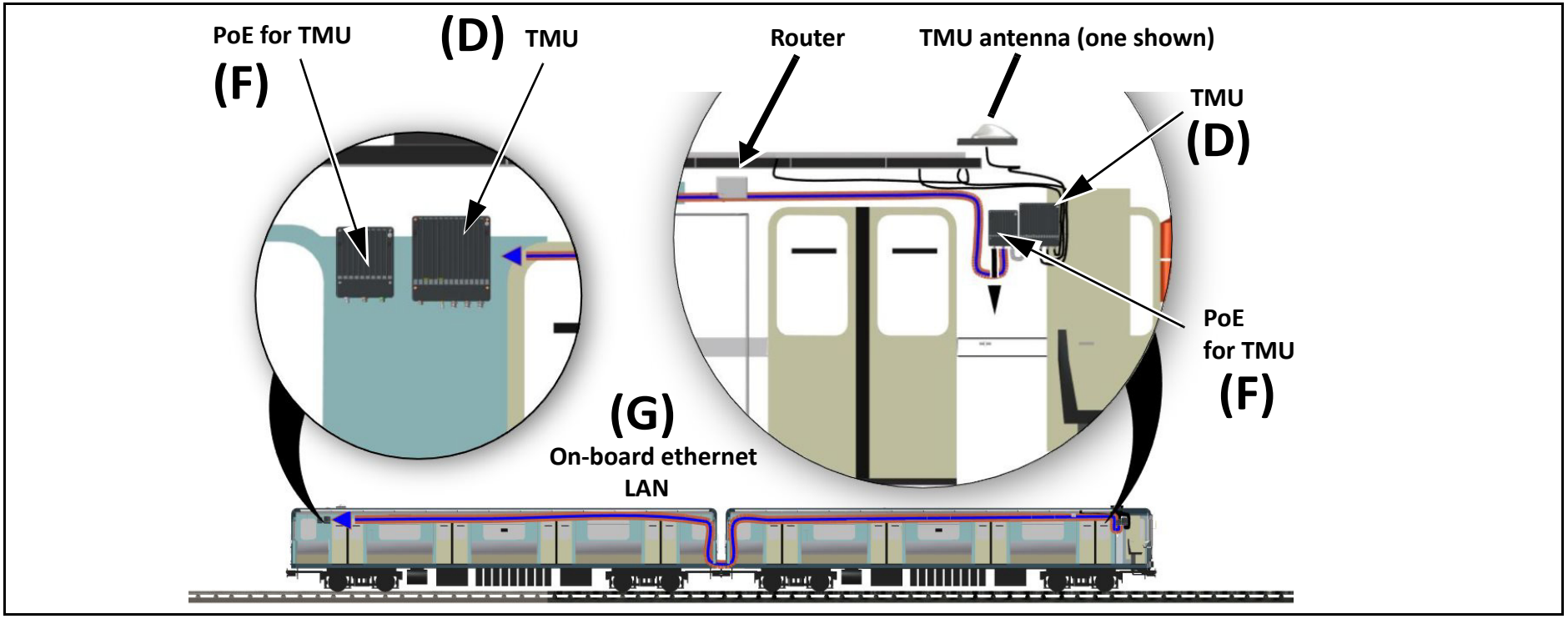

Figure 1-2: FiberinMotion Overview - Internal On-board view

FOR REGULATORY REVIEW

1.2.1 Major Components

The major components of the Transportation FiberinMotion solution are described below:

TBS

TBS (transportation base station) radios are OFDM/MIMO3x3, IP-67 compliant outdoor units placed at fixed locations along the wayside and communicate with TMUs (Transportation Mobile Units) installed on board trains/metros so as to ensure consistent and reliable broadband radio coverage.

Each TBS is connected to an Ethernet switch, which is connected in turn to the wired backhaul network. The TBSs are synchronized to a common time base to avoid potential mutual radio interferences and allow fast handover.

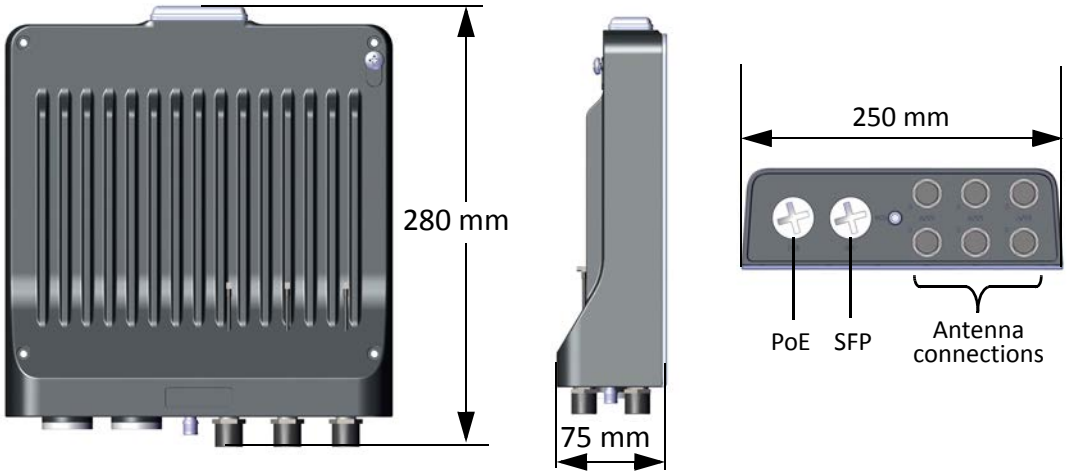

Figure 1-3: TBS unit

TBS antennas

Although there are many different types of antennas (see Appendix A, *Antenna Guidelines* for a list of antennas), we recommend using flat dual polarization and single polarization antennas per each direction. This allows a total of 6 RF chains to be connected, while minimizing the number of antennas.

Figure 1-4: TBS antenna

FOR REGULATORY REVIEW

TMU

TMU (transportation mobile unit) radios operate on-board, and transmit to/receive from TBSs installed on wayside poles or walls to provide communication connections for on-board equipment such as routers and WiFi devices.

Two TMUs (best practice) are installed on the train (one at each end), are connected to the train internal network, and maintain continuous communications link with the relevant TBS. The TMU to TBS connection establishes an Ethernet broadband network between the train and the core network, which can be used for Uplink/Downlink based services.

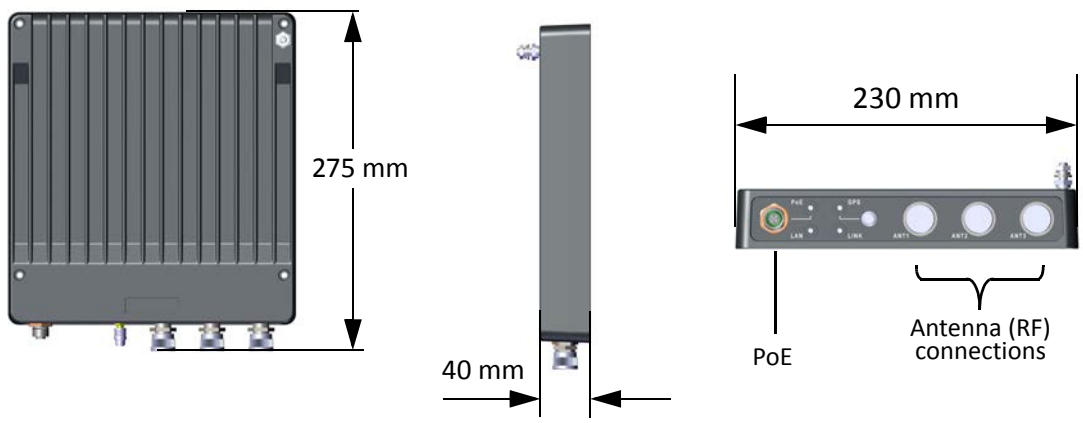

Figure 1-5: TMU radio

FOR REGULATORY REVIEW

TMU antennas

Each TMU is connected to 3 shark-fin antennas installed on the train roof pointing to the driving direction (see Appendix A, *Antenna Guidelines* for a list of antennas) :

Figure 1-6: Shark-fin antenna for TMU

Shark-fin antennas installed on train

ISU

The ISU (Indoor Synchronization Unit) provides a master clock to all TBSs, and is connected to one of the wayside network switches.

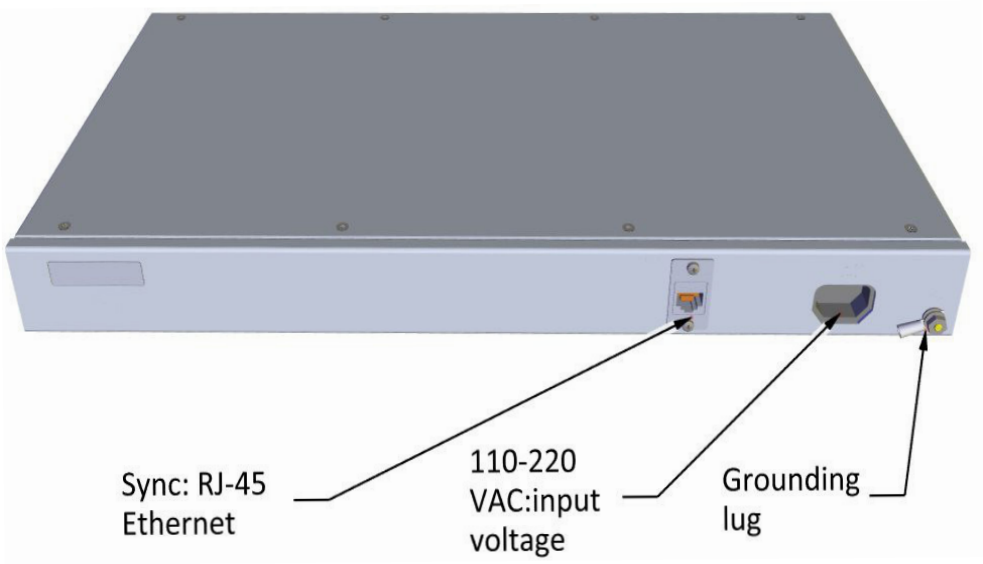

Figure 1-7: Indoor Synchronization Unit

FOR REGULATORY REVIEW

OSU

OSUs (Outdoor Synchronization Unit), encased in a similar form factor as the TBSs, are outdoor devices that receive a GPS clock signal and distributes this over the wayside network. The OSUs are connected to one of the wayside network switches. If there is a GPS failure, the OSUs act as an ISU and provide the internal clock to the TBSs.

Figure 1-8: Outdoor Synchronization Unit

FOR REGULATORY REVIEW

GSU

GSUs (GPS Synchronization Unit) are outdoor devices that receive a GPS clock signal and distributes this over the wayside network.

Figure 1-9: GPS Synchronization Unit

1.2.2 Accessories

You will also need some of the following accessories:

- Lightning protector unit - for use with outdoor products
- CAT-6 cables - various lengths for use with radios and PoE devices
- Grounding cables
- Additional mounting kits for the antennas and PoEs - each antenna and each external PoE installed on a pole needs a mounting kit.

Lightning Protection Unit (LPU)

RADWIN recommends using LPUs when installing outdoor products.

Figure 1-10: Lightning Protection Unit (LPU)

FOR REGULATORY REVIEW

PoE

Power-over-Ethernet devices can be used to supply both power and network communications to the TBS, TMU, and the OSU/ISU/GSUs. RADWIN provides different types of AC/DC PoE injectors in several power ranges.

If M12 cabling must be used on board, a special PoE-TMU cable is available from RADWIN.

Outdoor PoE **Indoor PoE** **PoE for the TMU (ruggedized, with M12 connections)**

Figure 1-11: PoE Units

Alternatively RADWIN TBS/TMU/OSU can be connected directly to a standard 802.3at (PoE+) device. It is always advised to consult with RADWIN professional services for the best power solution for your project.

1.2.3 Synchronization

- The TBS's network is synchronized either via GPS-based system (for above ground scenarios) or via Ethernet-based synchronization (for above or underground scenarios).
- For GPS based synchronization, the TBS's integrated GPS Synchronization Unit is used. If this is not possible, the GSU can be used.
- Ethernet-based synchronization runs over the same data backhaul network. The implementation of the synchronization protocol is via an Indoor Synchronization Unit (ISU) or Outdoor Synchronization Unit (OSU) that is connected to one of the network switches, and provides the master clock to all TBSs in the network.
    - OSU is a fully outdoor unit[1] with an embedded GPS antenna as well as an external GPS antenna port (to be used if an external GPS antenna is needed), and can connect to the network via fiber optic.
    - The OSU and ISU work in the same manner, with one important difference: The OSU can receive a GPS signal as the synchronization source.
    - Using multiple OSUs enables synchronization of a ring topology, each OSU synchronizing a section of the ring.
    - Redundant synchronization units ensure higher resiliency of the solution.
    - With a mixed tunnel/outdoor line, an OSU is typically used inside the tunnels, and a TBS with its GPS is used outside the tunnels.

1. *It uses the same form factor as the TBS*.

FOR REGULATORY REVIEW

1.3 Features

1.3.1 General

- Ethernet connectivity between base station and mobile units
- Advanced OFDM & MIMO 2x2 and 3x3 better performance
- Enhanced interference mitigation capability
- Long range between base stations
- Frequency bands - 4.9-5.9GHz (as local regulations permit)
- Dedicated Bandwidth ensuring SLA & latency
- Low and constant latency – min < 3ms, typical 4ms
- Channel bandwidth – 20/40/80 MHz
- Regulations supported - FCC/IC/ETSI/WPC/MII/Universal/Japanese/Thai Regulations
- Robust, reliable and can operate in harsh environments

1.3.2 Mobility Capabilities

- Fast handover - less than 50msec
- Up to 750 Mbps per TBS
- High speed - up to 300 Kph / 186 Mph
- Up to 16 TMUs per TBS
- RADWIN Network Management System support
- Smart Bandwidth Management (SBM) using dynamic bandwidth allocation to maximize service provider throughput and adhere to customer SLAs

1.3.3 Onboard Mobile Units

- Up to 750 Mbps aggregate throughput per TMU
- Supports customer SLAs by assignment of dedicated bandwidth for uplink and downlink per TMU, at the TBS
- Separate uplink and downlink configurable Maximum Information Rate (MIR) per TMU

1.4 Document Notifications

Notifications consist of Warnings, Cautions and Notes.

Warning

Warning: risk of danger to persons.

FOR REGULATORY REVIEW

Caution

Caution: risk of damage to equipment or of service degradation

Note

- Provide additional background
- Offer a recommendation
- Remind you of something that should be kept in mind

FOR REGULATORY REVIEW

Chapter 2: Site Installation

2.1 Scope of This Chapter

This chapter describes how to install the equipment for the Transportation FiberinMotion solution. It is divided into two main sections:

- Wayside installation
- On-board installation

2.2 Wayside

The FiberinMotion solution uses multiple antennas to enable MIMO and Diversity modes. The solution relies on antenna spacing, as well as dual polarization / dual slanted antennas to differentiate the radio streams.

2.2.1 Overview

General Mounting Arrangement

The TBS unit must be installed in a Restricted Access Location.

The TBS can be mounted on a pole or a wall, together with its antennas and LPUs. To enable better MIMO conditions, the antennas should be divided between vertical and horizontal polarizations. Figure 2-1 shows an example of a TBS mounted on a pole

- Place the tower/TBS at the location determined by the site survey.
- Make sure there is sufficient line-of-sight towards the track segment the antennas will cover
- Make sure that there are no obstacles directly in front of the antennas
- The lowest antenna must be higher than the highest rail car on the line
- There are several ways you can orient the TBS antennas, depending on the orientation of the TMU antennas. These options are detailed in see TMU - TBS antenna alternative orientation options on page 2-48.

FOR REGULATORY REVIEW

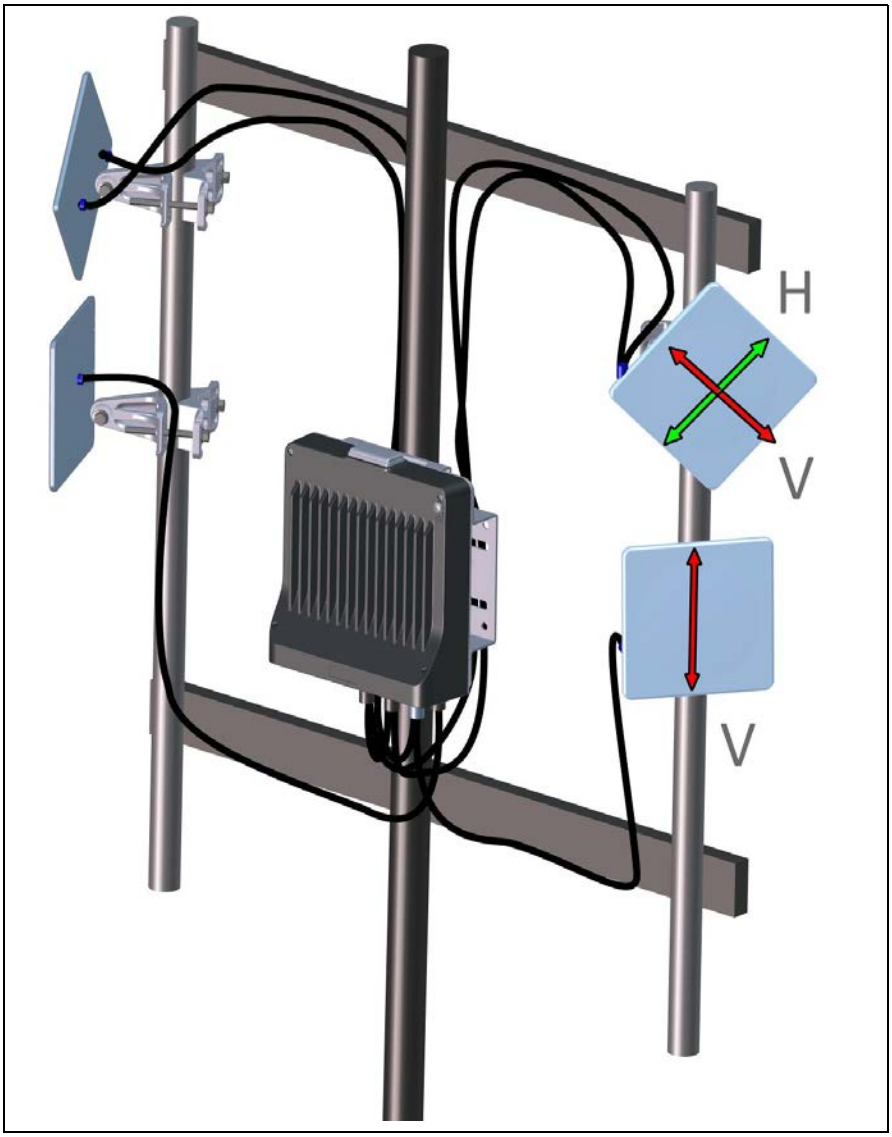

Figure 2-1: TBS - Base Station mounting with antennas (outside)

FOR REGULATORY REVIEW

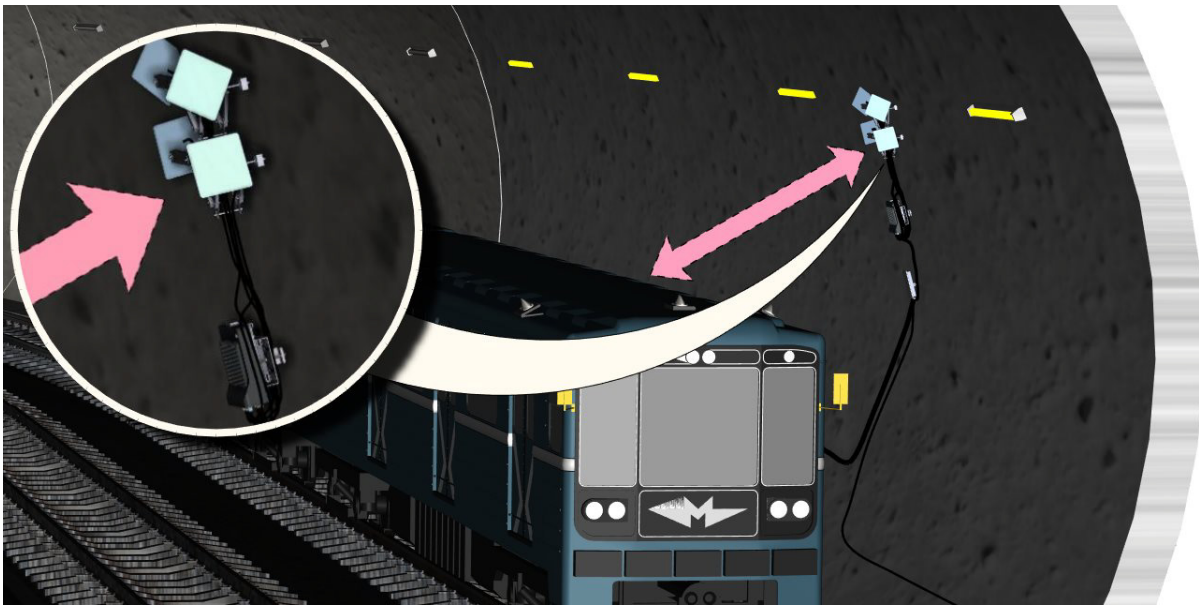

Figure 2-2: TBS - Base Station mounting with antennas (tunnel)

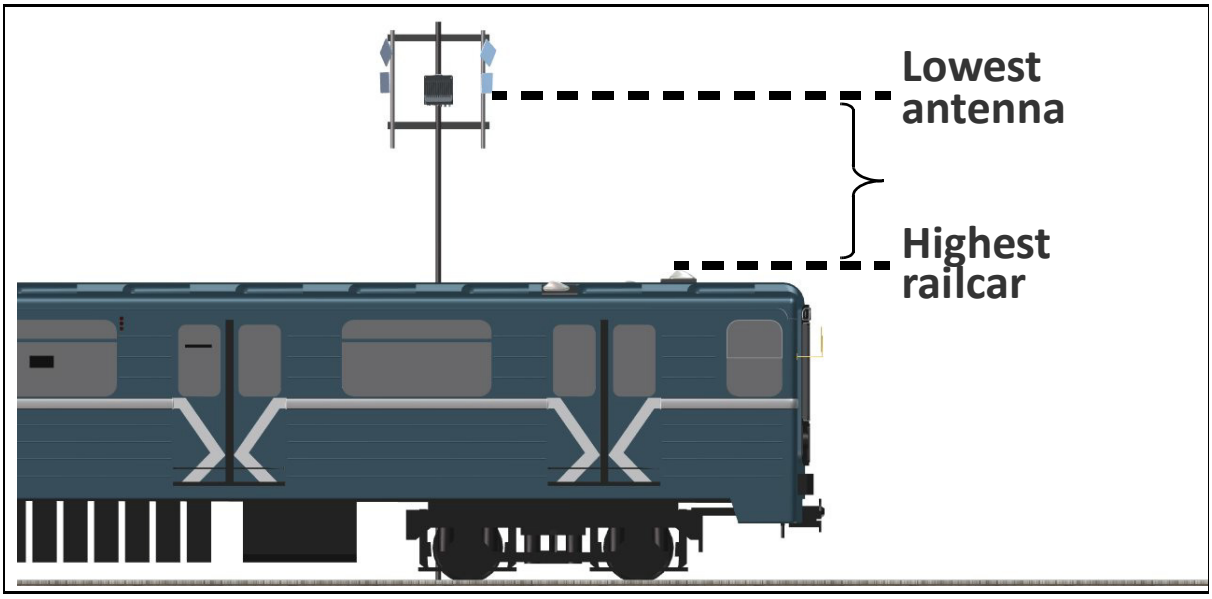

Figure 2-3: TBS antennas - lowest antennas higher than the highest rail car

Power

- Use the PoE to supply power to the TBS
- Use the PoE or the SFP fiber connection to provide a LAN connection to the TBS.
- Install two Lightning Protection Units (LPU): One close to the TBS, and the other close to the PoE.

Minimum Recommended Distances

There are two antennas for each direction (see Figure 2-1). Recommended vertical separation between each antenna is 1.0m.

FOR REGULATORY REVIEW

2.2.2 TBS Mounting

The TBS can be mounted on a vertical or horizontal pole, or on a wall.

- **Vertical pole:** see page 2-6 for directions relevant to all sizes.
  - **Thin pole:** see page 2-6.
  - **Medium pole:** see page 2-8
  - **Thick pole:** see page 2-8
- **Horizontal pole:** see page 2-9 for directions relevant to all sizes.
  - **Thin pole:** see page 2-11.
  - **Medium pole:** see page 2-12
  - **Thick pole:** see page 2-13
- **Wall:** The TBS can be mounted on a wall, see page 2-13.

Check the package contents:

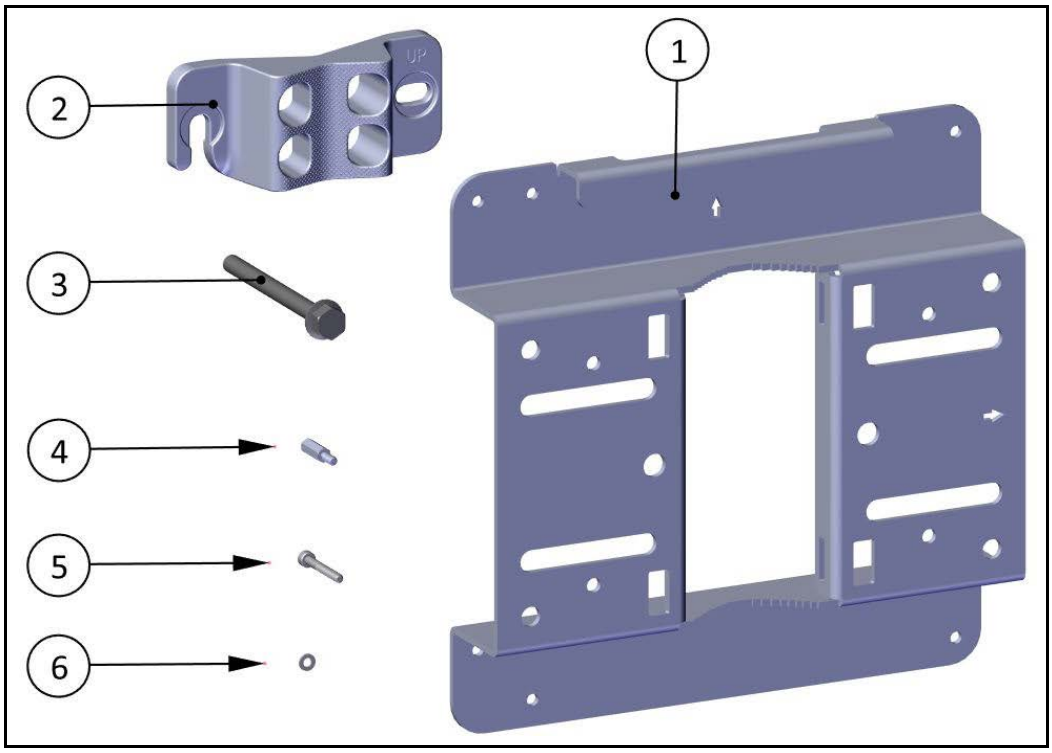

Figure 2-4: TBS mounting kit package contents

Table 2-1: TBS mounting kit package contents

Item No.	Description	Quantity
1	Base plate	1
2	Pole clamp	1
3	Hex screw with flange M8x90	2

FOR REGULATORY REVIEW

Table 2-1: TBS mounting kit package contents (Continued)

Item No.	Description	Quantity
4	Standoffs M4x16	4
5	Allen screws M4x30	4
6	Washers for allen screws	4

FOR REGULATORY REVIEW

TBS Mounting on a Vertical Pole

All sizes

1. Fasten the standoffs to the base plate in the holes labeled “V” as shown:

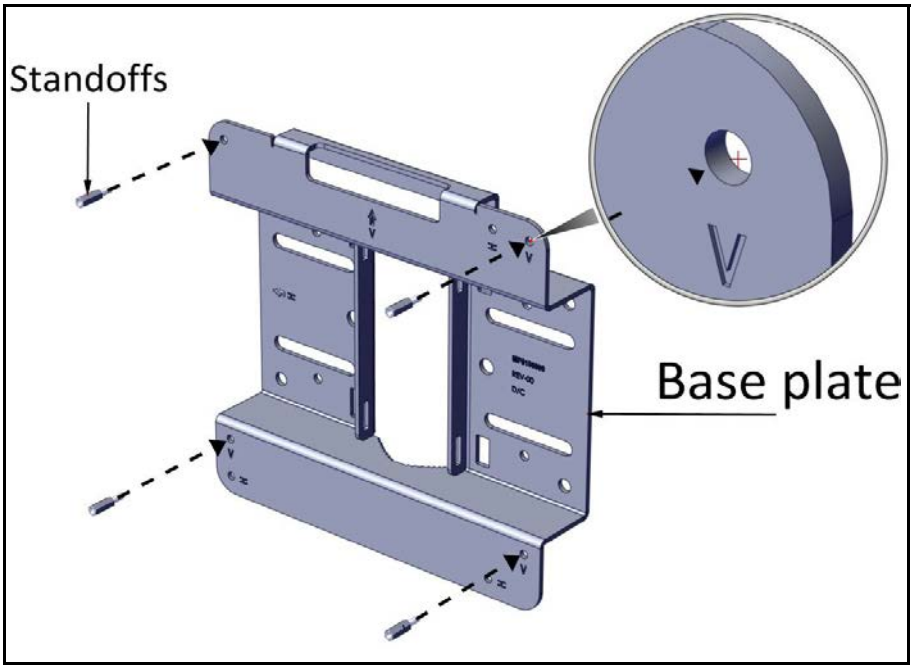

Figure 2-5: Fasten standoffs to base plate (for vertical pole)

2. Place the TBS as shown over the standoffs, and using the Allen screws and washers, fasten the TBS to the base plate.

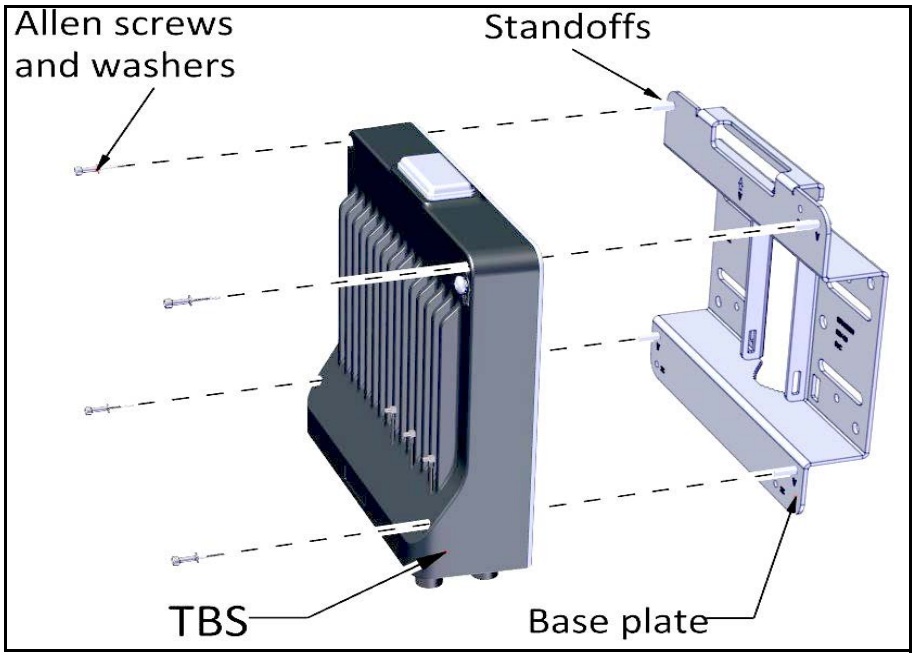

Figure 2-6: Fasten TBS to base plate (for vertical pole)

Vertical Pole - thin

1. Diameter 3/4 to 1 1/2: Before raising the TBS on the pole, position the pole clamp as shown in the following two figures. Do not completely tighten the bolts:

FOR REGULATORY REVIEW

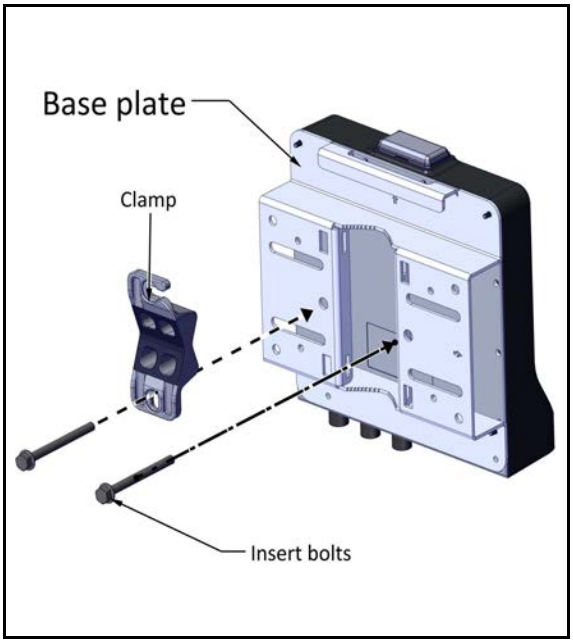

Figure 2-7: Thin pole: Fasten clamp to base plate

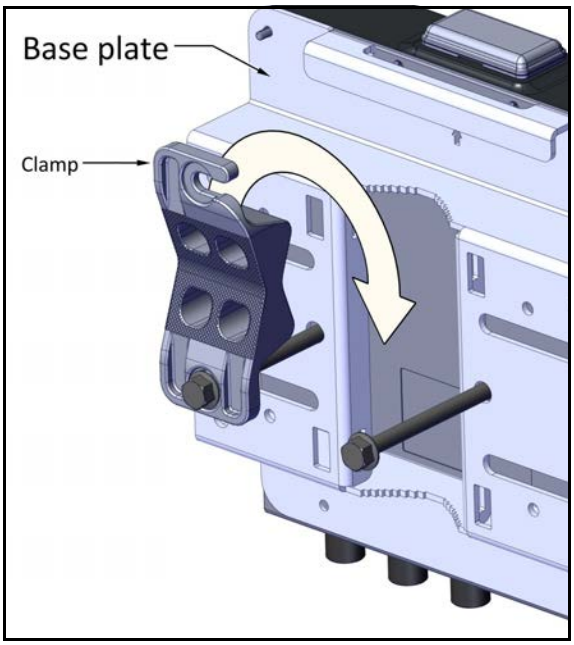

Figure 2-8: Thin pole: Do not completely tighten bolts

2. Place this assembly on the pole where you want to mount the TBS. Once it is in place, rotate the pole clamp as shown, then tighten both bolts.

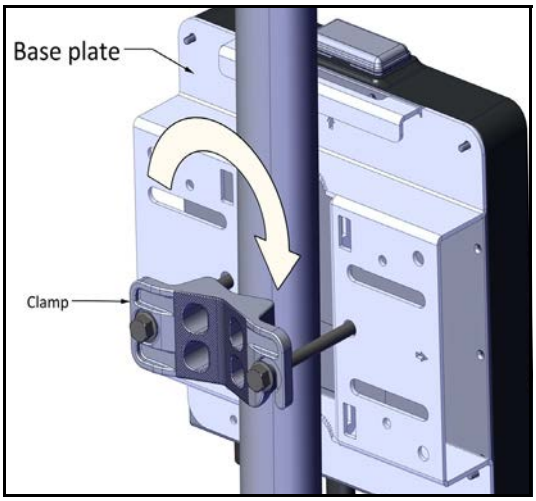

Figure 2-9: Thin pole: Rotate clamp

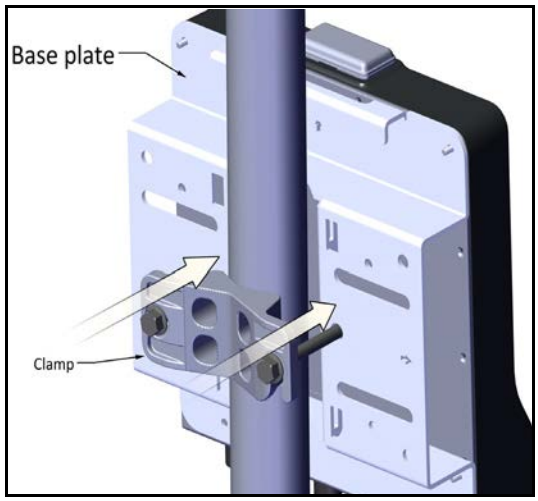

Figure 2-10: Thin pole: tighten bolts

FOR REGULATORY REVIEW

Vertical pole - medium

1. Diameter 2 to 3: Before raising the TBS on the pole, position the pole clamp as shown in the following two figures. Do not completely tighten the bolts:

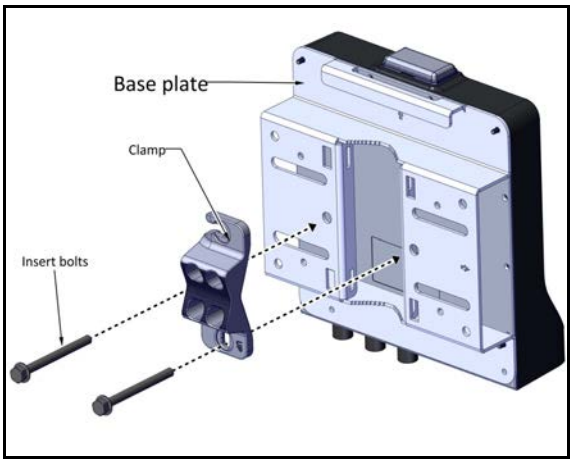

Figure 2-11: Medium pole: Fasten clamp to base plate

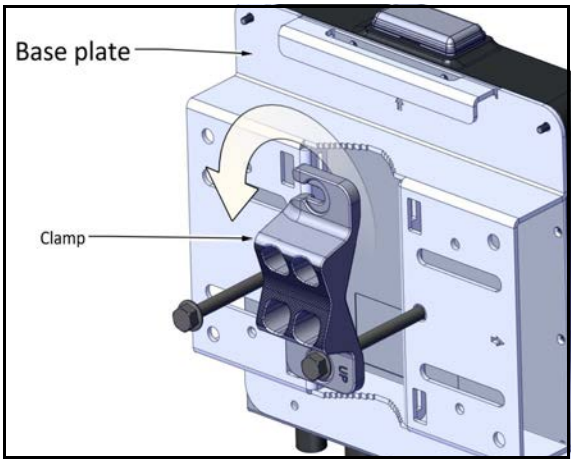

Figure 2-12: Medium pole: Do not completely tighten bolts

2. Place this assembly on the pole where you want to mount the TBS. Once it is in place, rotate the pole clamp as shown, then tighten both bolts.

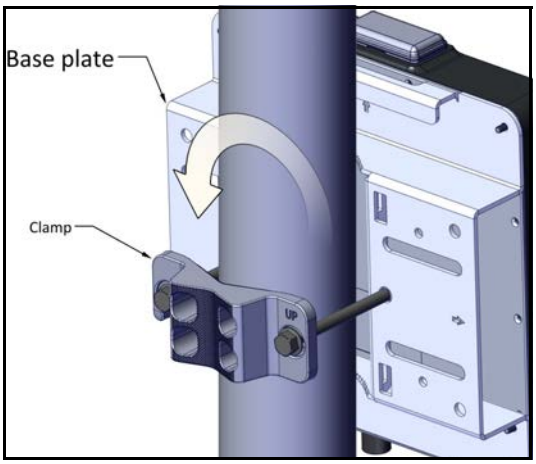

Figure 2-13: Medium pole: Rotate clamp

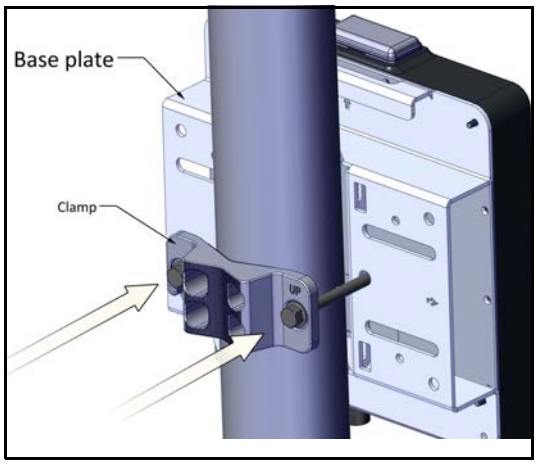

Figure 2-14: Medium pole: tighten bolts

Vertical Pole - thick

1. Diameter larger than 3: Use worm drive clamps (not supplied), threaded through the holes as shown in Figure 2-15, or U-bolts (not supplied), fastened using the holes as shown in Figure 2-16:

FOR REGULATORY REVIEW

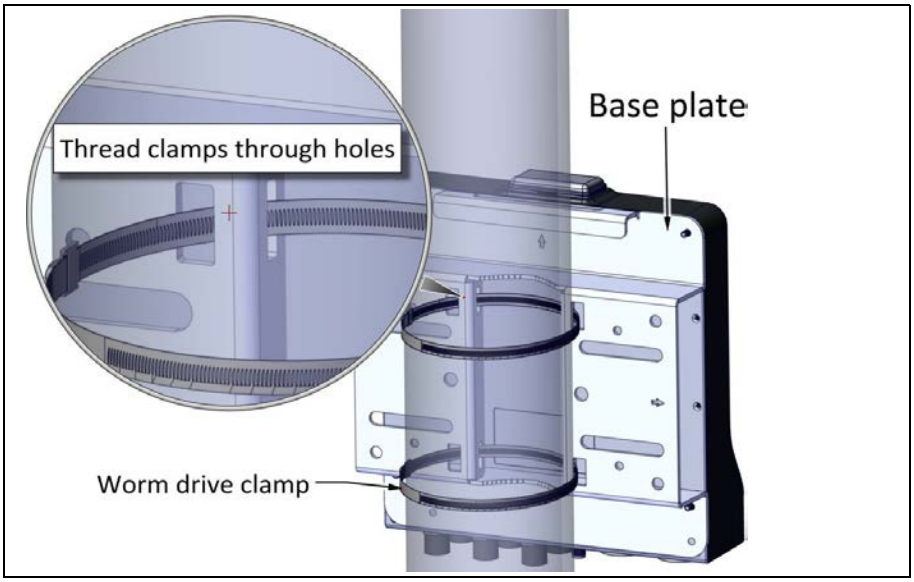

Figure 2-15: Using worm drive clamps for a thick pole

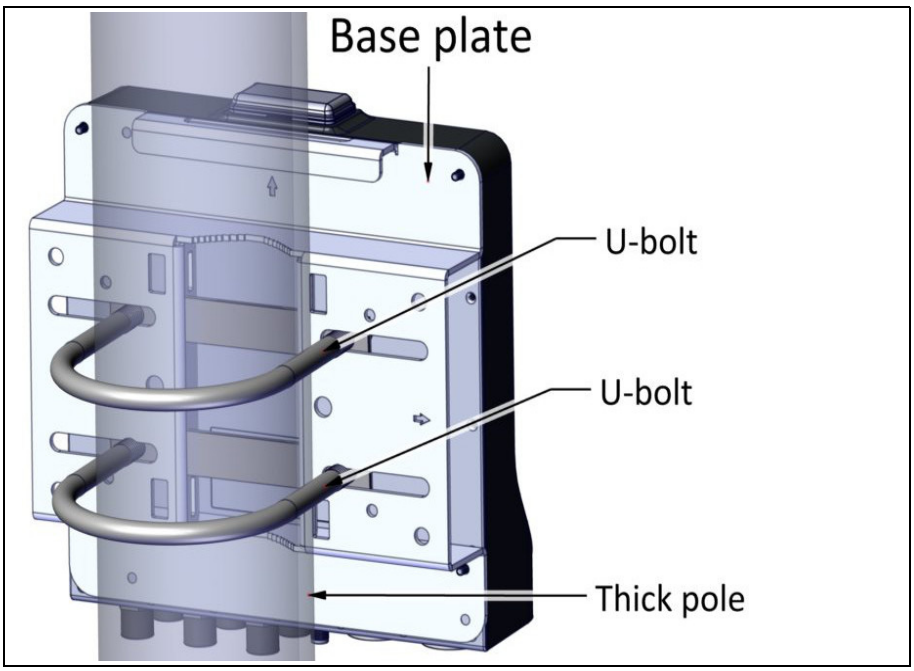

Figure 2-16: Using U-bolts for a thick pole

TBS Mounting on a Horizontal Pole

All sizes

1. Before fastening the TBS to the base plate (see Step 1. on page 2-6), rotate the plate by 90° clockwise. Make sure the arrow next to the “H” points up.

FOR REGULATORY REVIEW

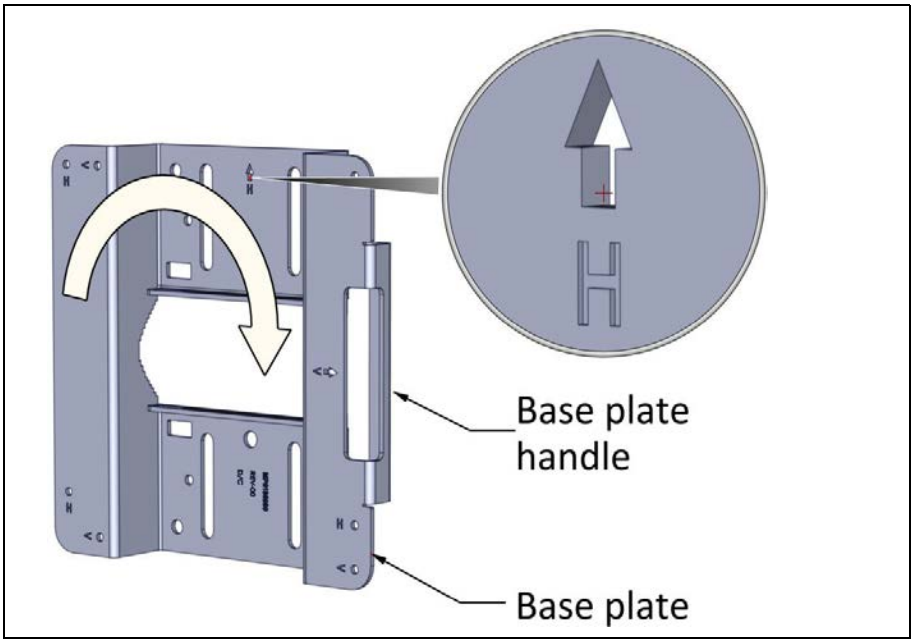

Figure 2-17: Rotate base plate clockwise 90° for horizontal pole

2. Fasten the standoffs to the base plate in the holes labeled “H” as shown:

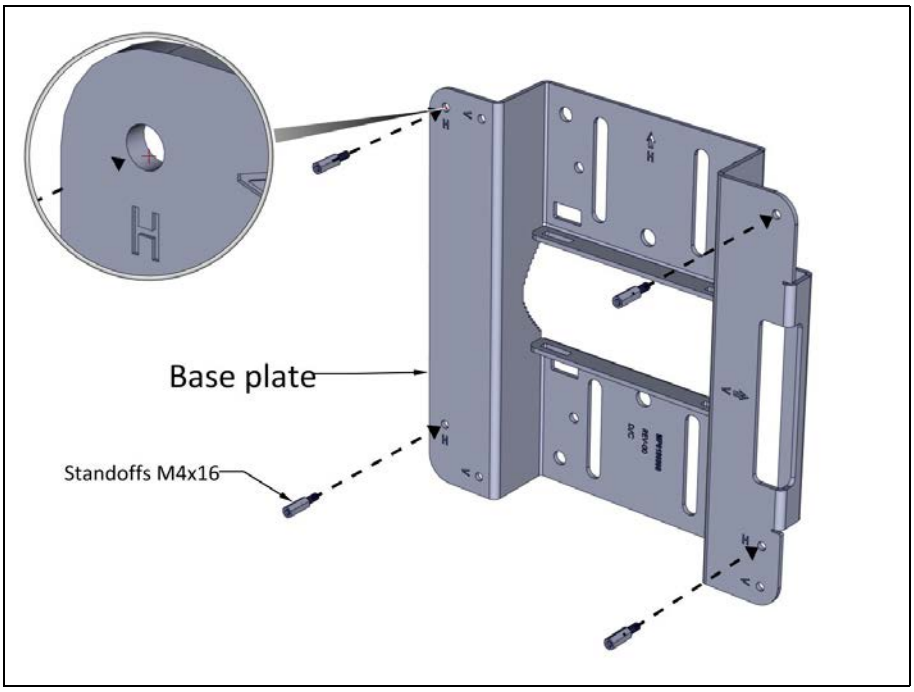

Figure 2-18: Fasten standoffs to base plate (for horizontal pole)

3. Place the TBS as shown over the standoffs, and using the Allen screws and washers, fasten the TBS to the base plate.

FOR REGULATORY REVIEW

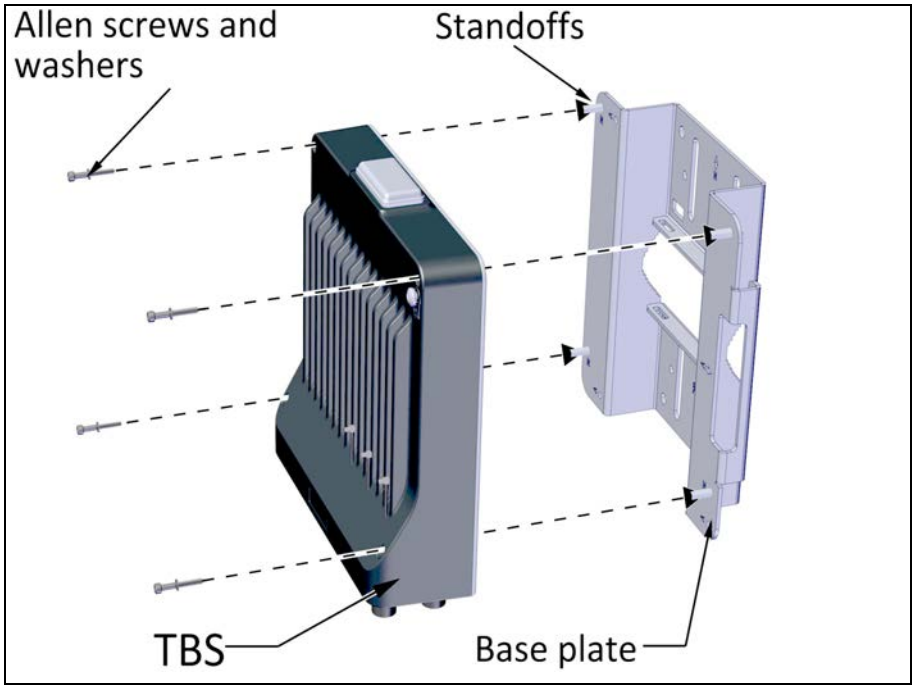

Figure 2-19: Fasten TBS to base plate (for horizontal pole)

Horiztonal Pole - thin

1. Diameter 3/4 to 1 1/2: Before raising the TBS on the pole, position the pole clamp as shown in the following two figures. Do not completely tighten the bolts:

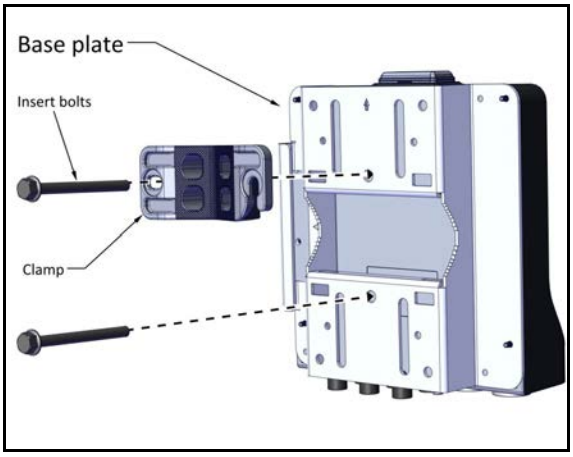

Figure 2-20: Thin pole: Fasten clamp to base plate

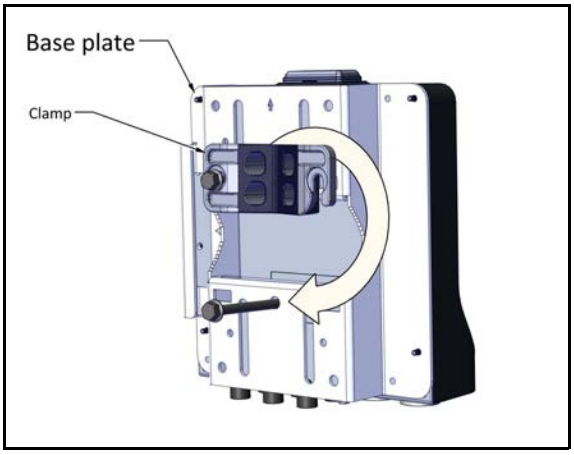

Figure 2-21: Thin pole: Do not completely tighten bolts

FOR REGULATORY REVIEW

2. Place this assembly on the pole where you want to mount the TBS. Once it is in place, rotate the pole clamp as shown, then tighten both bolts.

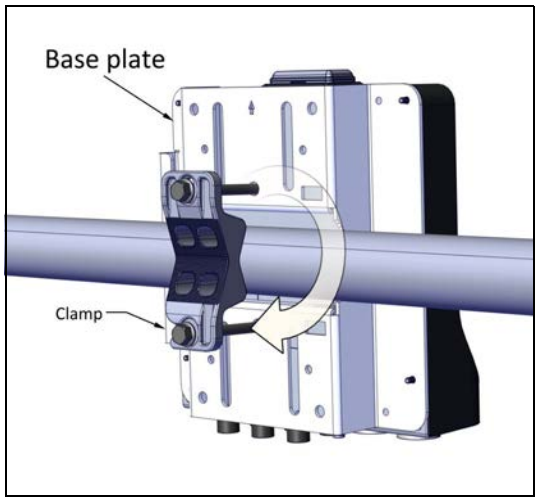

Figure 2-22: Thin pole: Rotate clamp

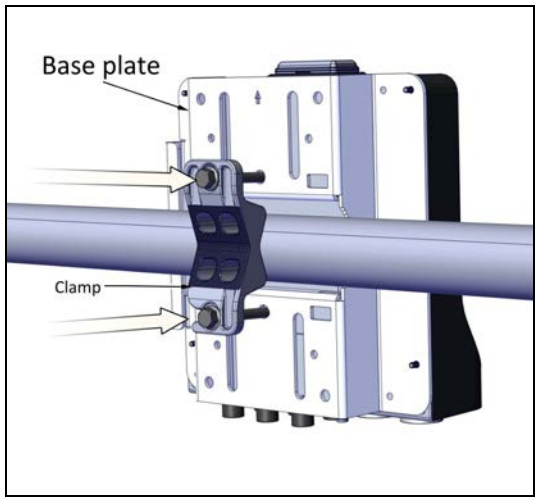

Figure 2-23: Thin pole: tighten bolts

Horizontal Pole - medium

1. Diameter 2 to 3: Before raising the TBS on the pole, position the pole clamp as shown in the following two figures. Do not completely tighten the bolts:

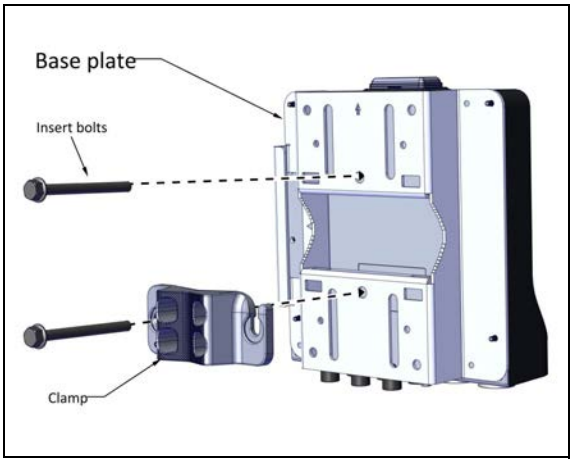

Figure 2-24: Medium pole: Fasten clamp to base plate

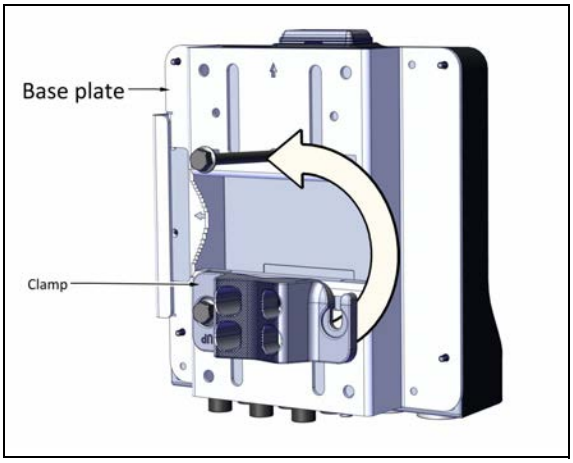

Figure 2-25: Medium pole: Do not completely tighten bolts

FOR REGULATORY REVIEW

2. Place this assembly on the pole where you want to mount the TBS. Once it is in place, rotate the pole clamp as shown, then tighten both bolts.

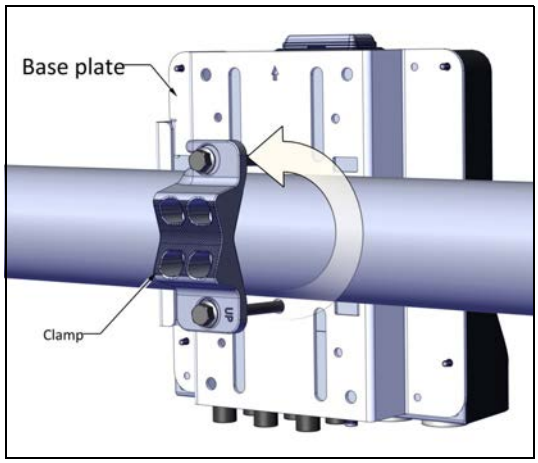

Figure 2-26: Medium pole: Rotate clamp

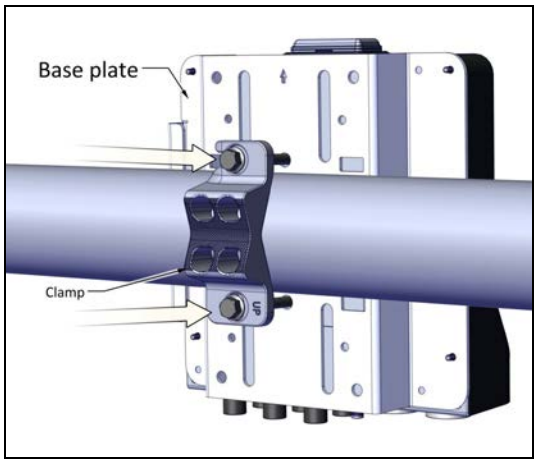

Figure 2-27: Medium pole: tighten bolts

Horiztonal Pole - thick

1. Diameter larger than 3: Use metal bands (not supplied), threaded through the holes as shown in Figure 2-28, or U-bolts (not supplied), fastened using the holes as shown in Figure 2-29:

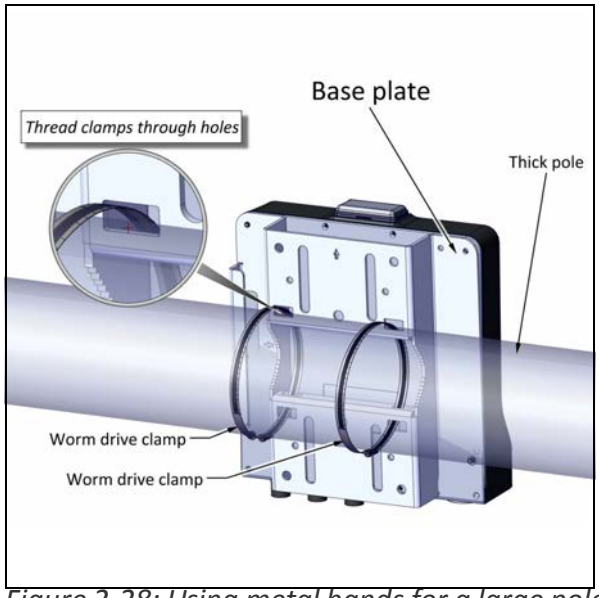

Figure 2-28: Using metal bands for a large pole

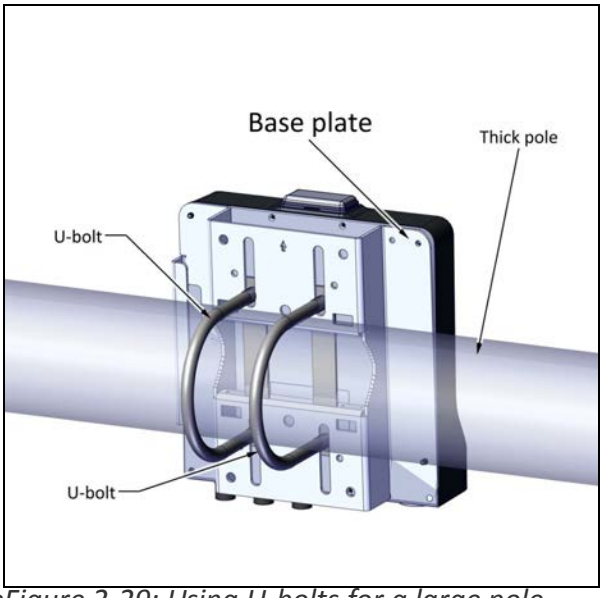

Figure 2-29: Using U-bolts for a large pole

TBS mounting on a wall

1. Fasten the standoffs to the base plate in the holes labeled “V” or “H”, whichever is more convenient, as shown:

FOR REGULATORY REVIEW

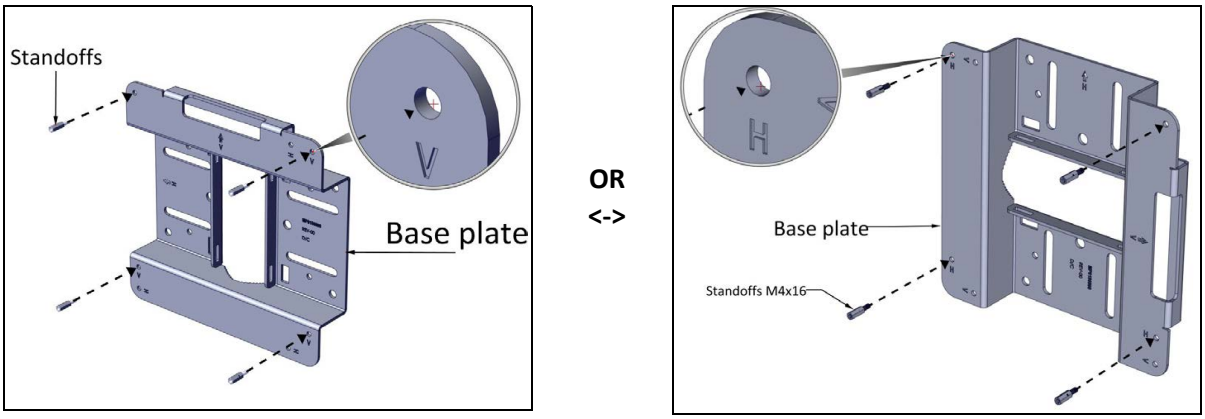

Figure 2-30: Fasten standoffs to base plate

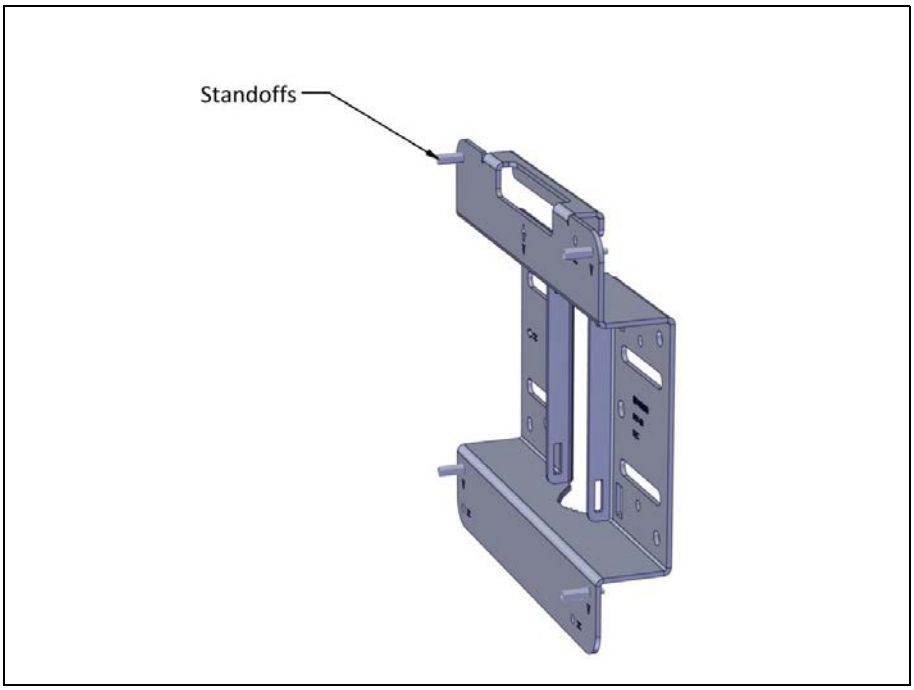

Figure 2-31: Standoffs fastened to base plate

2. Use anchor bolts to attach base plate to a wall, as shown:

FOR REGULATORY REVIEW

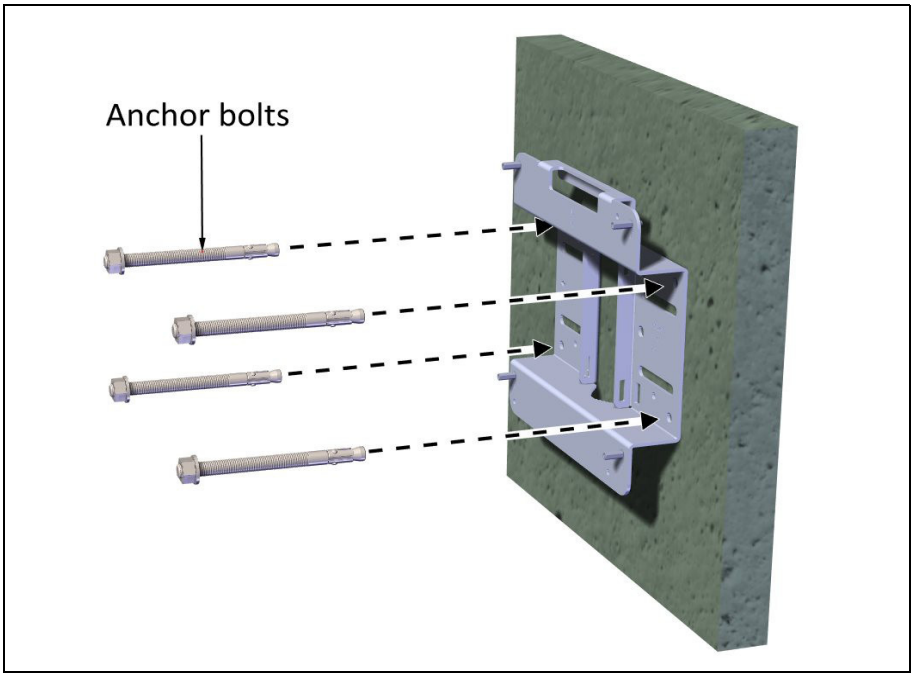

Figure 2-32: Attach base plate to wall

3. Place the TBS as shown over the standoffs, and using the Allen screws and washers, fasten the TBS to the base plate.

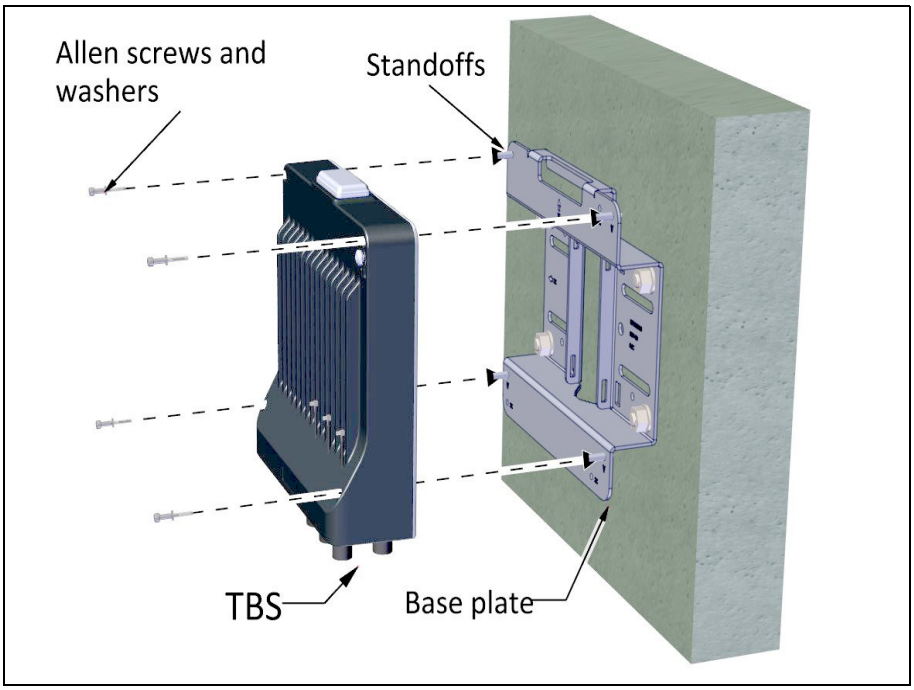

Figure 2-33: Fasten TBS to base plate on wall

FOR REGULATORY REVIEW

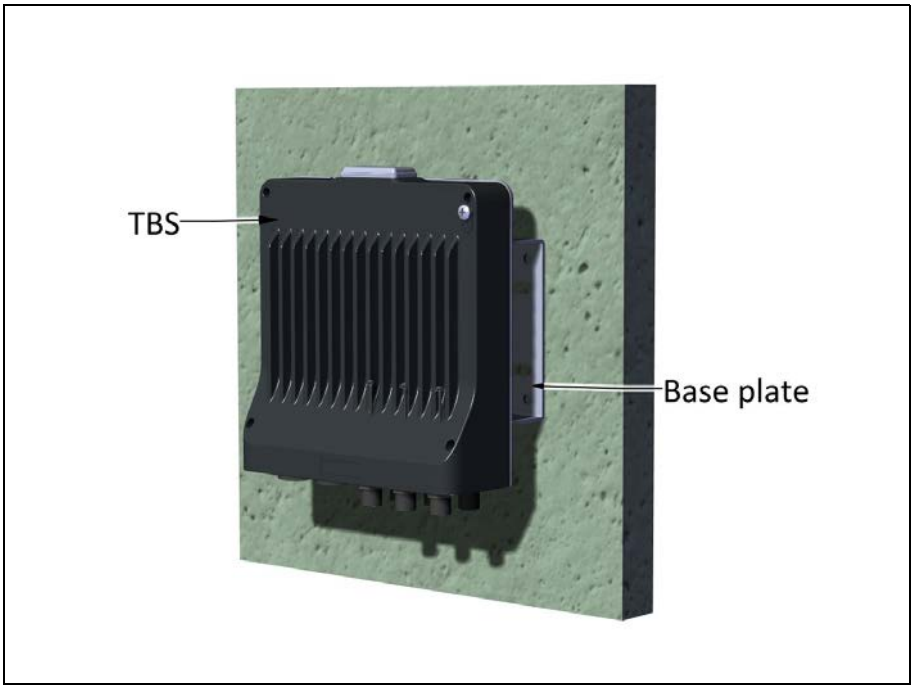

Figure 2-34: TBS mounted on a wall

Caution

Always mount a TBS with the connectors on the bottom. Never mount a unit horizontally.

2.2.3 PoE Devices for the TBS

The TBS is powered by a PoE device, installed in a cabinet.

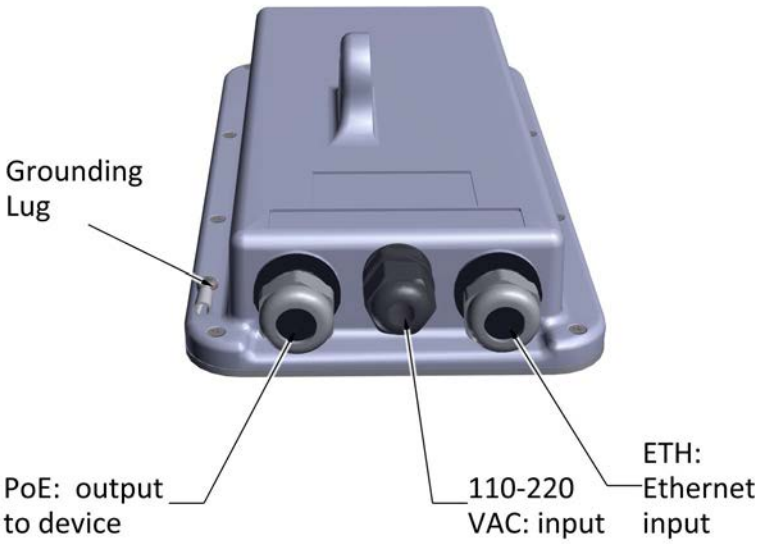

Figure 2-35: PoE external connections

FOR REGULATORY REVIEW

2.2.4 TBS Antennas

Use the antenna mounting kit (different from the TBS mounting kit) to mount a TBS antenna on a pole or wall. .

- **Vertical pole:** see page 2-18 to
  - **Thin pole:** see page 2-17.
  - **Medium pole:** see page 2-18
  - **Thick pole:** see page 2-20
- **Horizontal pole:** see page 2-20 for directions relevant to all sizes.
- **Wall:** see page 2-21.

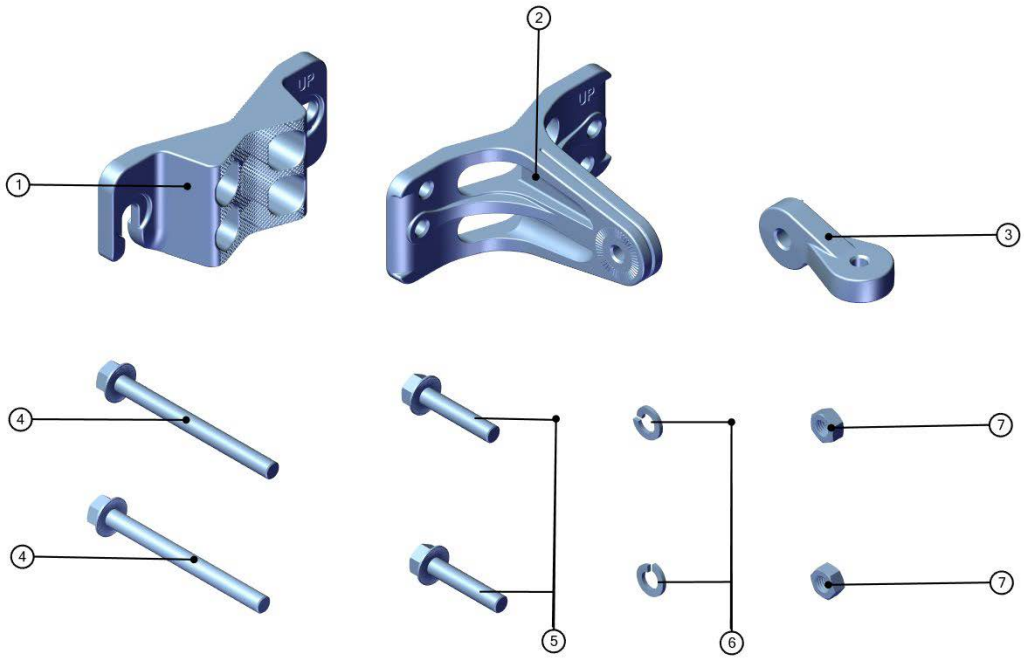

Item	Description	Qty
1	Pole Clamp	1
2	Radio Holder	1
3	Radio Vertical Adaptor	1

Item	Description	Qty
4	Hex Bolt 8x90	2
5	Hex Bolt 8x40	2
6	Spring Lock Washer	2

Item	Description	Qty
7	M8 Nut	2

Figure 2-36: Antenna Mounting Kit Contents

Note

Tighten all bolts with a torque of 15Nm.

TBS Antenna Mounting on a Vertical Pole

Thin Pole

This method is for mounting the TBS antenna on a pole of pipe size 3/4 to 1 1/2 in.

FOR REGULATORY REVIEW

Warning

Do not mount the TBS antenna on a pole smaller than 3/4 in.

1. When mounting on a thin pole, position the pole clamp as shown in the following figures:

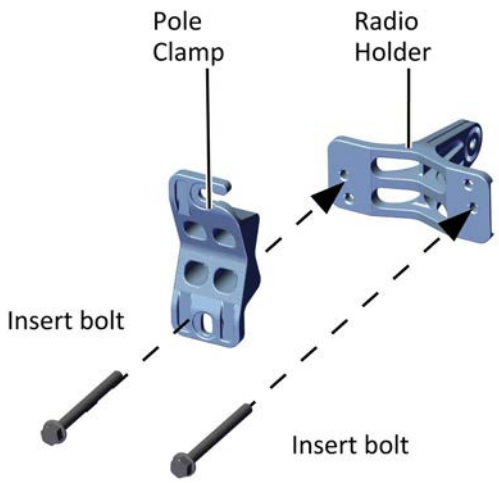

Figure 2-37: Connect Pole Clamp to Radio Holder

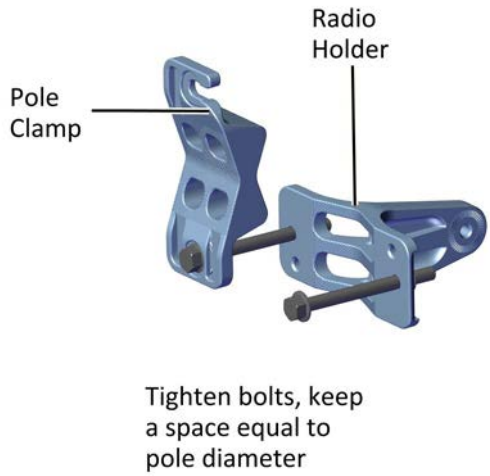

Figure 2-38: Tighten bolts

2. Place this “unit” on the pole where you want to mount the antenna. Once it is in place, rotate the pole clamp as shown, then tighten both bolts.

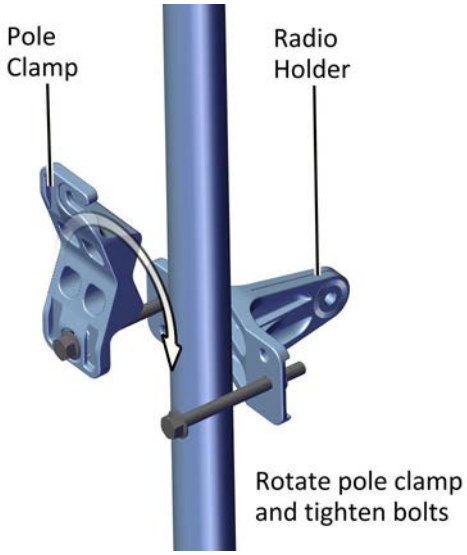

Figure 2-39: Rotate Clamp and tighten bolts

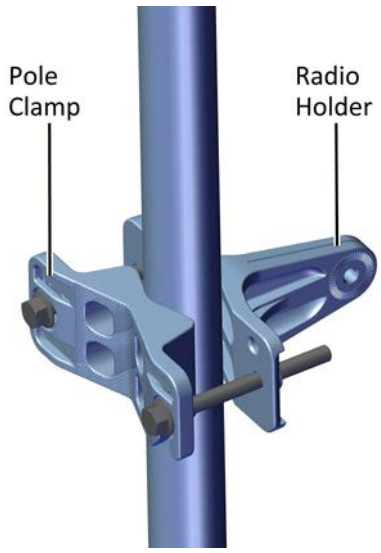

Figure 2-40: Mounting Kit on thin pole

Medium Pole

This method is for mounting the TBS antenna on a pole of pipe size 2 to 3 in.

3. Connect the pole clamp to the radio holder with the 8x90 bolts, but do not tighten the bolts all the way - tighten them so that they are not closer than a distance

FOR REGULATORY REVIEW

equal to the radius of the pole. You will then have one “unit” that you can take to the location on the pole where you want to mount the antenna. (See Figure 2-37 to Figure 2-40 for mounting on a thin pole)

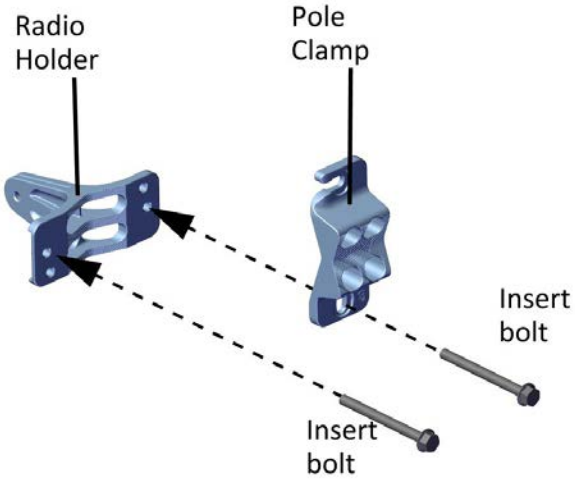

Figure 2-41: Connect Pole Clamp to Radio Holder

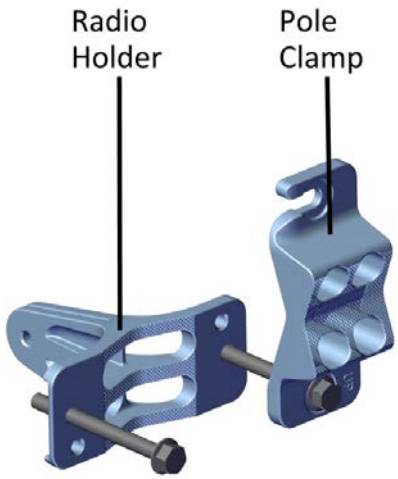

Figure 2-42: Tighten bolts

4. Place this “unit” on the pole where you want to mount the antenna. Once it is in place, rotate the pole clamp as shown, then tighten both bolts.

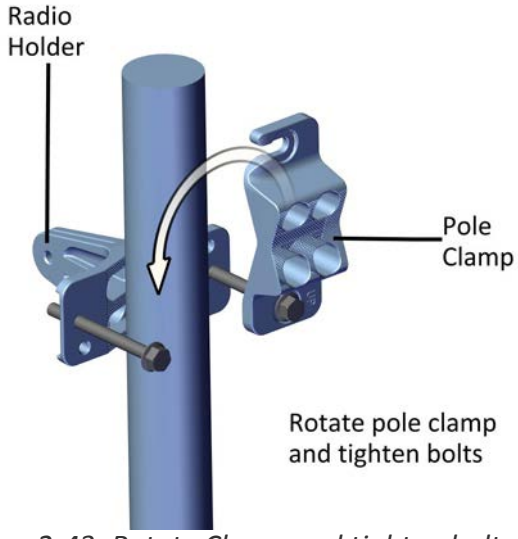

Figure 2-43: Rotate Clamp and tighten bolts

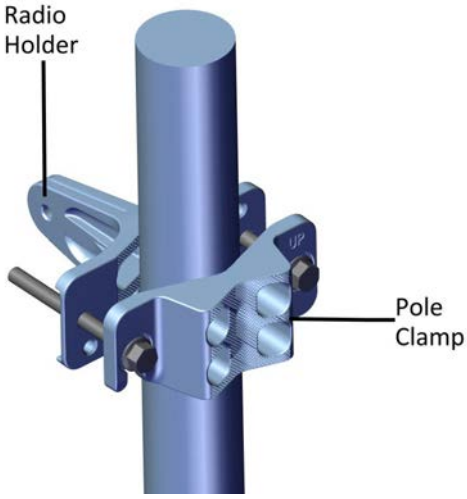

Figure 2-44: Mounting Kit on pole

Thick Pole

- This method is for mounting the TBS antenna on a pole of pipe size larger than 3 in.
- Use worm drive clamps (not supplied), threaded through the holes as shown. The pole clamp is not needed.

FOR REGULATORY REVIEW

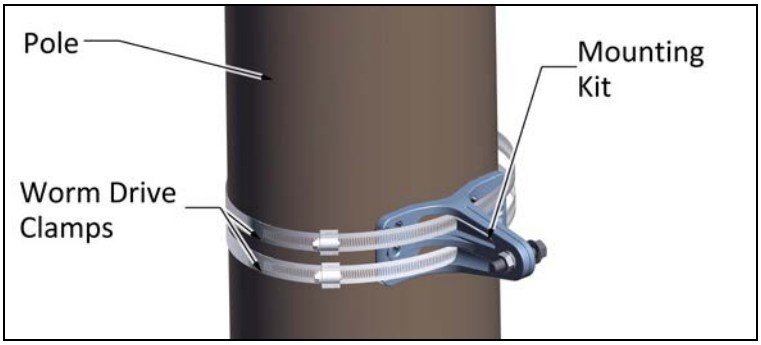

Figure 2-45: Mounting kit on a thick pole

TBS Antenna Mounting on a Horizontal Pole

When using the mounting kit on a horizontal pole, use the radio vertical adaptor, as shown:

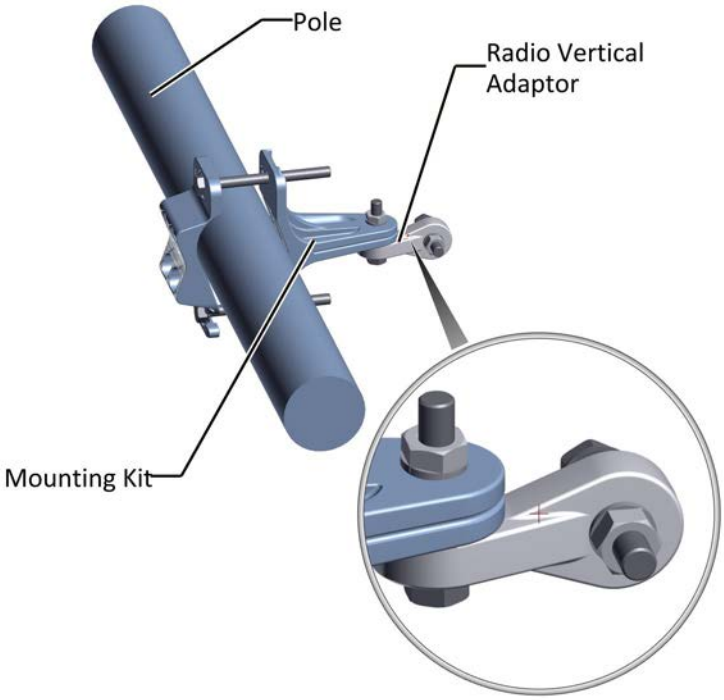

Figure 2-46: Mounting kit on a horizontal pole

FOR REGULATORY REVIEW

TBS Antenna Mounting on a Wall

When using the mounting kit on a wall, the pole clamp is not necessary:

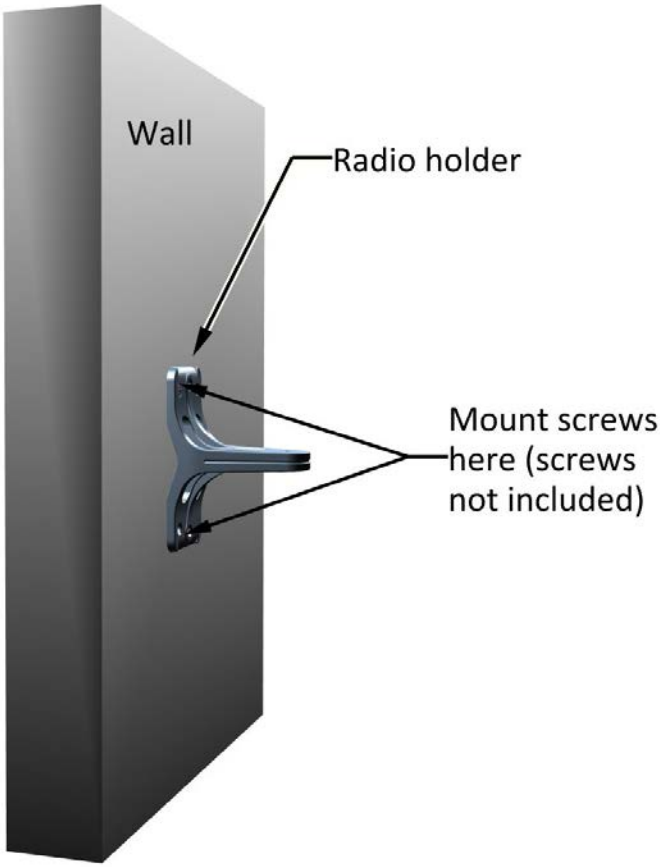

TBS Antenna Mounting Kit Adaptor

The mounting kit adaptor appears as shown in Figure 2-47:

Figure 2-47: Flat panel antenna mounting kit adapter

A flat panel antenna such as that shown in Figure 2-49 is typically used. It has eight bolts for a mounting kit adapter, which allows you to mount the antenna in a straight up-and-down manner, or in a diagonal manner.

FOR REGULATORY REVIEW

Typically, the upper antenna is mounted diagonally, an has both a Vertical and Horizontal polarization. The lower antenna is mounted straight, with only a Vertical polarization. See also Figure 2-1, *"TBS - Base Station mounting with antennas (outside)"*.

Attach the mounting kit adaptor to the rear of the antenna as shown:

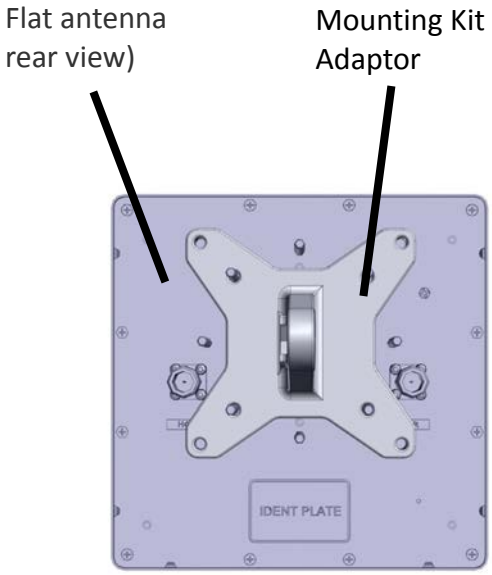

Figure 2-48: Flat Panel Antenna - straight mount

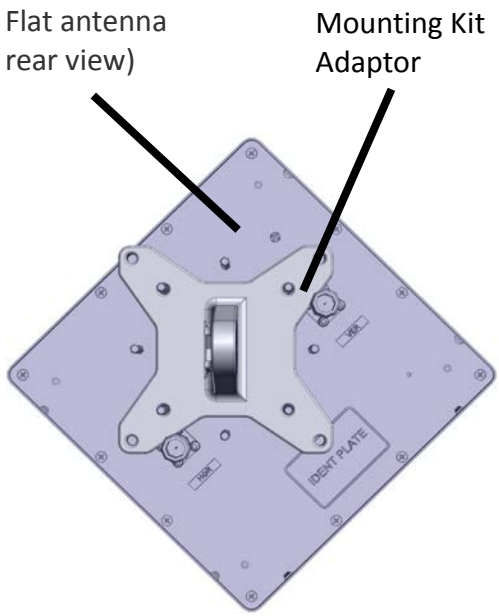

Figure 2-49: Flat Panel Antenna - diagonal mount

Figure shows a mounted antenna. Fasten the mounting nut to the side of the adaptor with the recess, as shown.

FOR REGULATORY REVIEW

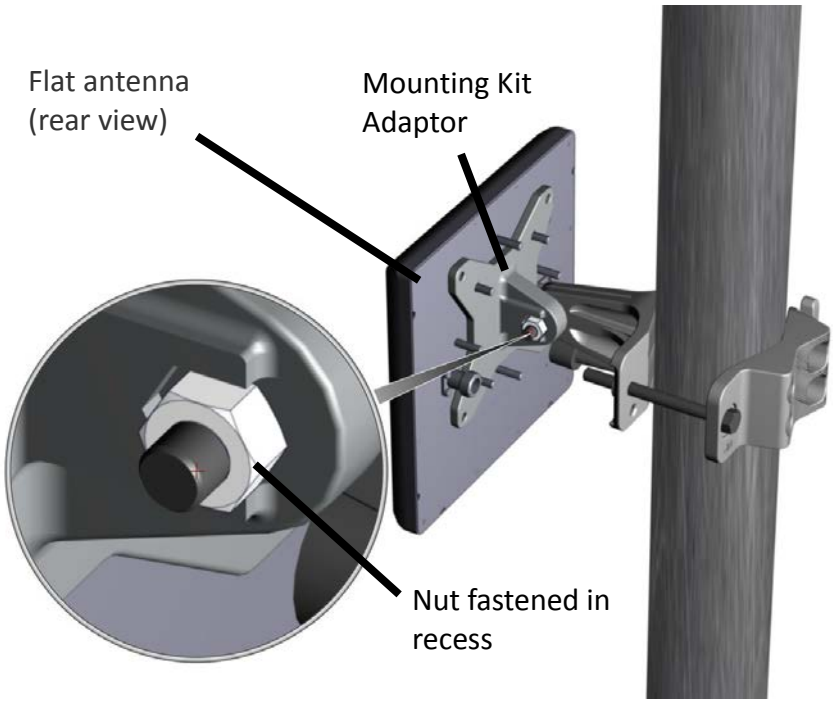

Figure 2-50: Flat Panel antenna - straight-mounted on a pole

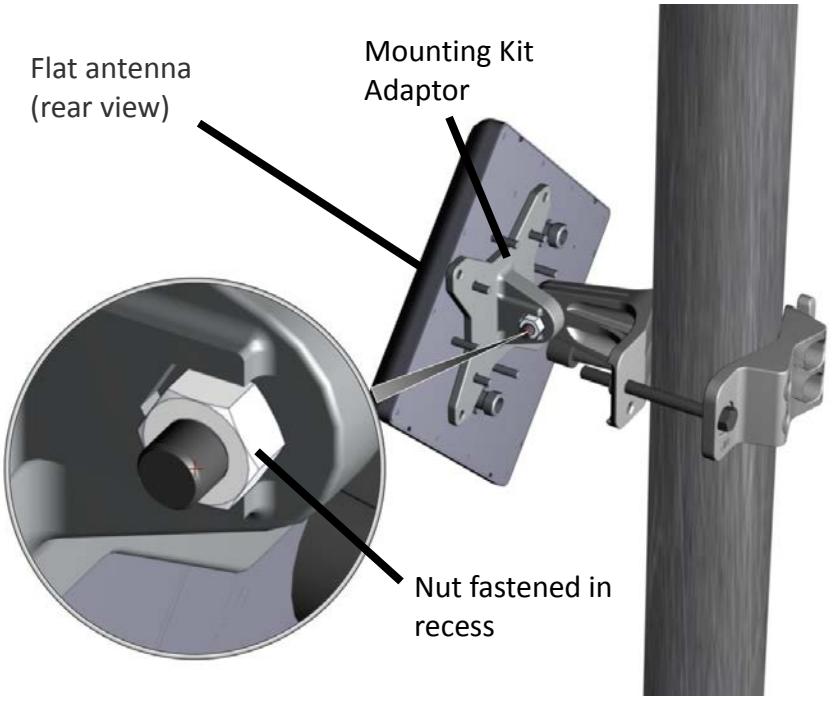

Figure 2-51: Flat Panel antenna - diagonal-mounted on a pole

FOR REGULATORY REVIEW

2.2.5 TBS External Connections

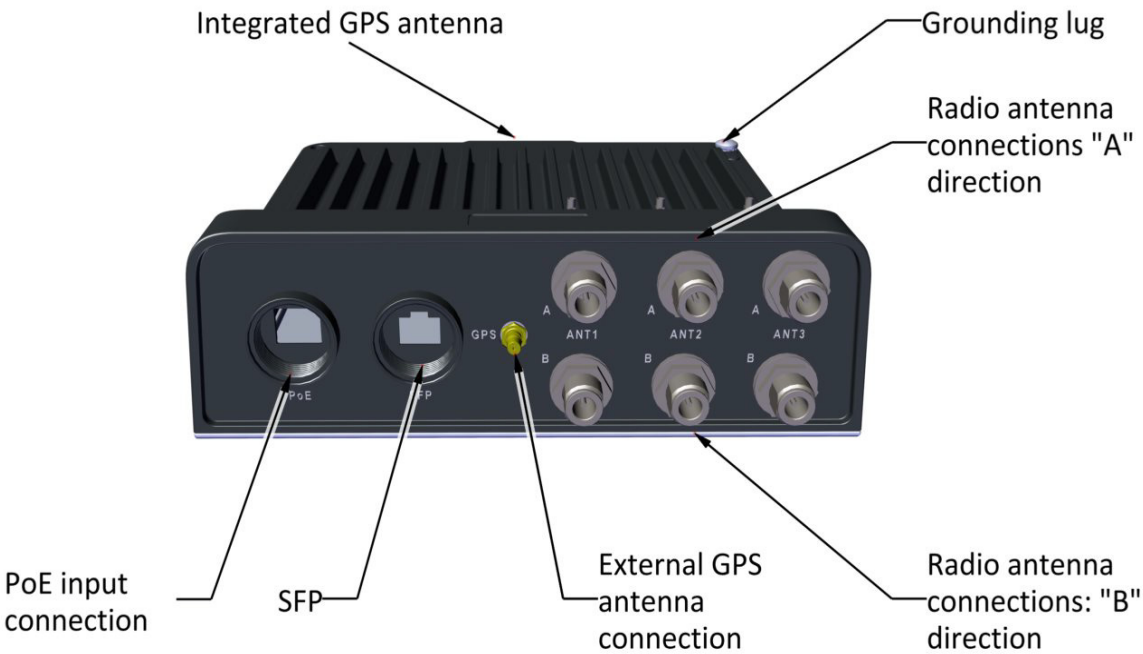

Figure 2-52: TBS external connections

The “A” direction relates to the direction this set (the “A” set) of antennas are pointing, and the “B” direction relates to the direction the “B” set of antennas are pointing. Which direction is A and which is B is arbitrary.

Table 2-2: TBS LED Indicators (PoE port)

LED Location	LED Color	Off	On	Blinking
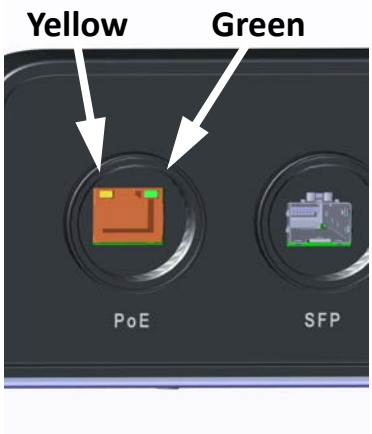	**Yellow**	No power	Power is being supplied	N.A.
	Green	No LAN connection or No power	A LAN connection exists, but no data is flowing	Data is flowing via the LAN connection
	TBS LEDs shut off after 5 minutes of operation.			

FOR REGULATORY REVIEW

2.2.6 Synchronization Units

Indoor Synchronization Unit (ISU)

The Indoor Synchronization Unit (ISU) provides a master synchronization clock for all TBS units, and is connected to one of the network switches.

It can be installed on a 19in. rack or on a convenient indoor surface.

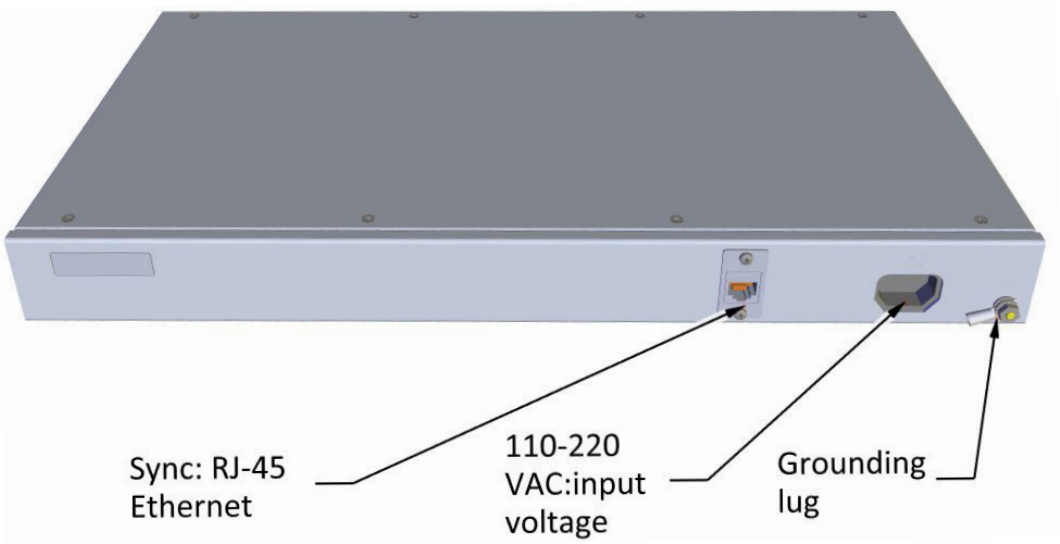

Figure 2-53: Indoor Synchronization Unit (ISU)

FOR REGULATORY REVIEW

Outdoor Synchronization Unit (OSU)

The Outdoor Synchronization Unit (OSU) provides a master synchronization clock for all TBS units, and is connected to one of the network switches.

It is housed in the same housing as a TBS unit, and is installed in the same manner as a TBS (see TBS Mounting on page 2-4). It receives a GPS synchronization signal, and can use its integrated GPS antenna, or an external GPS antenna.

Figure 2-54: OSU external connections

FOR REGULATORY REVIEW

Table 2-3: OSU LED Indicators (PoE port)

LED Location	LED Color	Off	On	Blinking
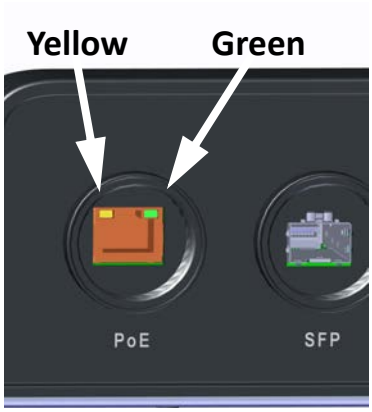	**Yellow**	No power	GPS synchronization	Internal synchronization
	Green	No LAN connection or No power	A LAN connection exists, but no data is flowing OSU LEDs shut off after 5 minutes of operation.	Data is flowing via the LAN connection

FOR REGULATORY REVIEW

GSU

GSUs (GPS Synchronization Unit) are outdoor devices that receive a GPS clock signal and distributes this over the wayside network.

A GSU is mounted in the same manner as TBS external antennas (see TBS Antennas on page 2-17), and can be mounted on a vertical or horizontal pole, or a wall.

Vertical pole	Horizontal pole	Wall

Figure 2-55: Mounted GSUs

The external connections of the GSU are shown in Figure 2-56, below.

Connect the external GPS antenna to the antenna port (labeled “GPS” on the unit), and a PoE unit with both ethernet and power to the “IDU” port. The “Sync” port is used when working with an external Hub Site Synchronization unit (HSS unit), which is not usually relevant for FinM projects.

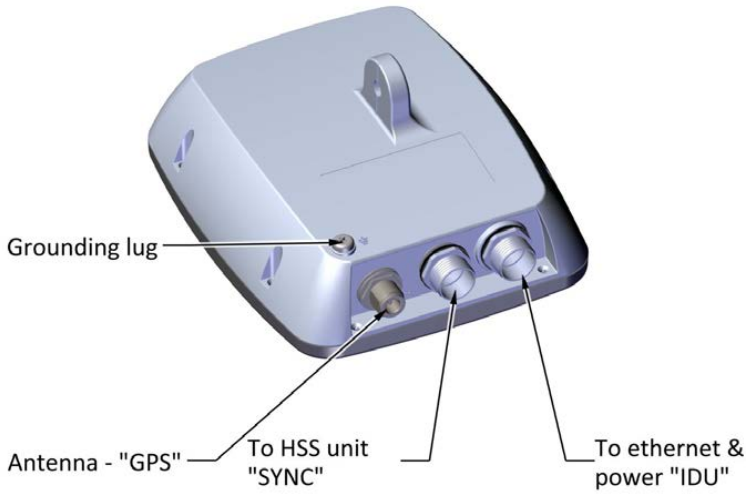

Figure 2-56: GSU External connections

FOR REGULATORY REVIEW

2.2.7 External GPS Antenna

The external GPS antenna is mounted on a vertical or horizontal pole segment. The QMA connector connects the antenna to the TBS/OSU external GPS port.

Note

Although the TBS/OSU has an integrated GPS antenna, in some cases, it might be necessary to locate a GPS antenna in a different location. In that case, this GPS antenna can be used. Each installation should be evaluated by RADWIN professional services personnel.

Figure 2-57 shows the GPS antenna on its mount. The antenna is seated in an inverted L plate with a hole for the antenna port. The L plate is strapped to the pole with a pair of worm drive clamps.

Figure 2-57: GPS antenna and mount

FOR REGULATORY REVIEW

2.2.8 Lightning Protection Unit (LPU)

The use of lightning protection is dependent on regulatory and end user requirements. Although FiberinMotion units have surge limiting circuits that minimize the risk of damage due to lightning strikes, RADWIN recommends the use of additional surge arrestor devices to protect the equipment from nearby lightning strikes.

Figure 2-58: Lightning Protection Unit (LPU)

For any type of indoor unit-outdoor unit connection, the LPUs are installed in pairs, as shown in Figure 2-59:

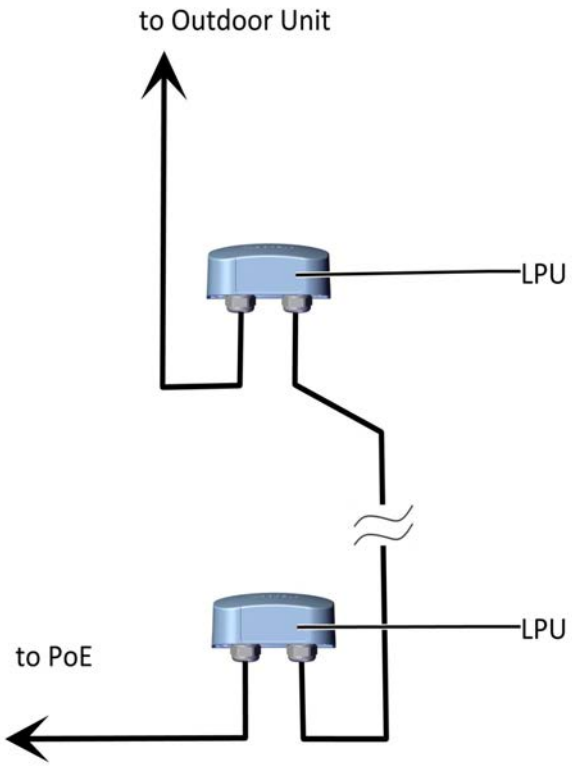

Figure 2-59: Basic use of lightning protector units

FOR REGULATORY REVIEW

The LPU has two cable glands on the bottom for CAT-5e/6 cables, in addition to a grounding lug. On the side of the LPU is a slot for the metal tie when installed on a pole, as shown in Figure 2-60 and Figure 2-61:

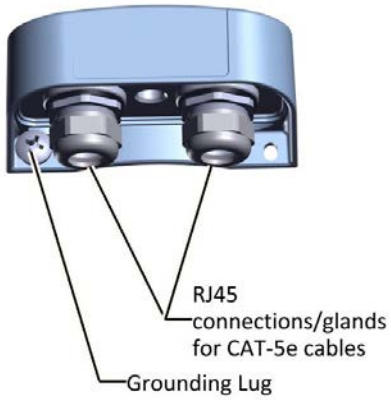

Figure 2-60: LPU: Bottom View

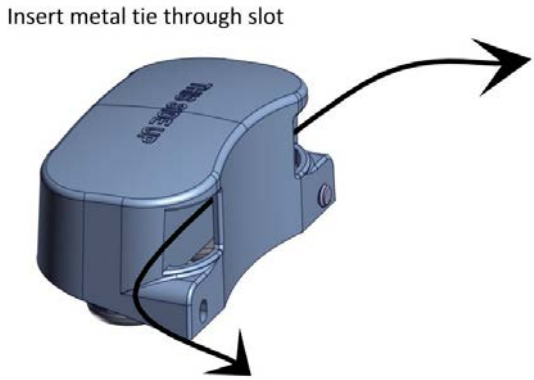

Figure 2-61: LPU: Side View

To install an LPU on a pole:

1. Choose a location as close as possible to the radio unit.
2. Insert the metal tie through the slots as shown in Figure 2-61. Make sure the LPU is oriented in the correct direction, as shown in Figure 2-62.

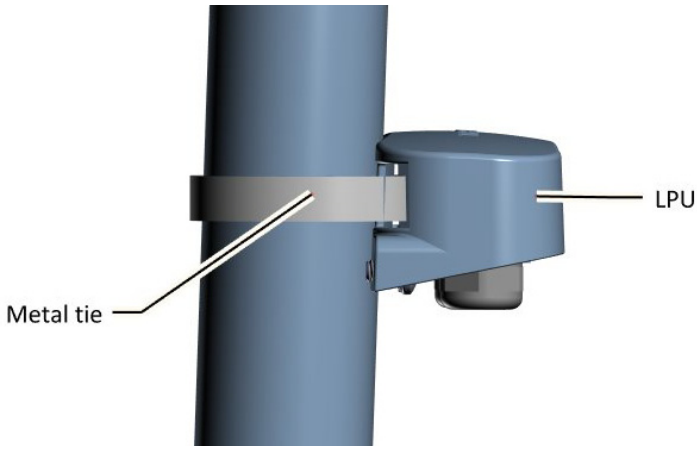

Figure 2-62: LPU attached to pole with metal tie

3. Tighten the metal tie.
4. Connect the grounding lug to a grounding source.
5. Remove the cable glands.
6. Thread the CAT-5e/6 cables through the cable glands, and connect the cables to the LPU as shown in Figure 2-63.

FOR REGULATORY REVIEW

7. Tighten the cable glands around the CAT-5e cables as shown in Figure 2-64.

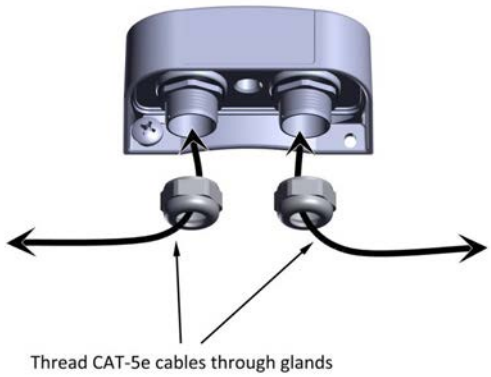

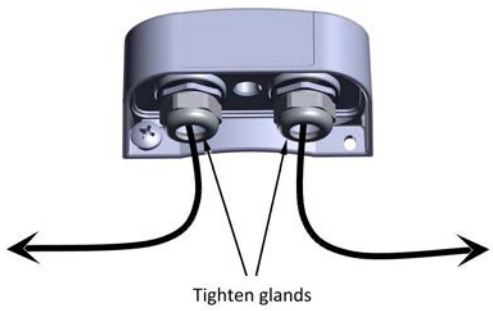

Figure 2-63: Connecting cables to the LPU (1) *Figure 2-64: Connecting cables to the LPU (2)*

8. Route one CAT-5e/6 up to the radio, and the other down to the IDU or PoE (via the lower LPU). An LPU installed on a pole is shown in Figure 2-65.
9. RADWIN recommends that you add extra waterproofing to the connections (see *see "Waterproofing" on page 2-33.*).

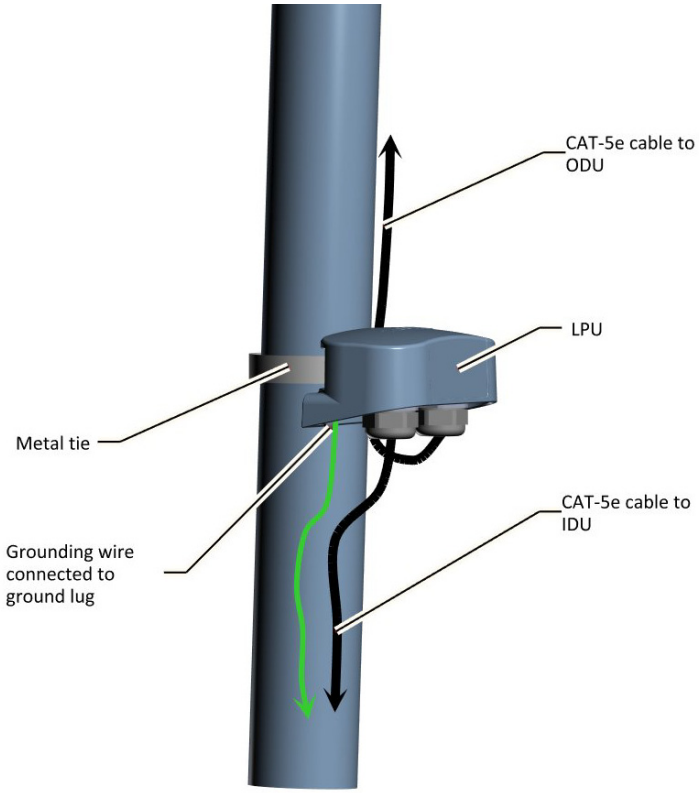

Figure 2-65: Installing an LPU on a pole (side view)

FOR REGULATORY REVIEW

2.2.9 Waterproofing

Protect all connections between any outdoor devices and cables from rain, dust, moisture and salt according to the procedure below:

1. Use a high quality sealing material such as Scotch 23 Tape ¾” wide, to ensure IP-67 compliant protection against water and dust.
2. Cut two pieces each 25 cm long, of Scotch 23 splicing tape. Remove the plastic cover to expose the tacky side of the sealing tape as shown in Figure 2-66.

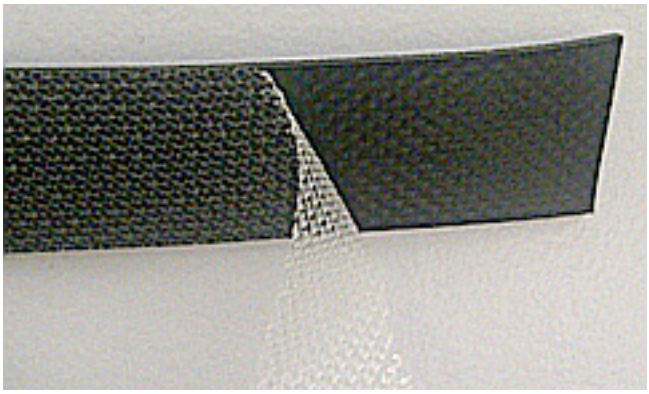

Figure 2-66: Exposing the tacky side of the sealing tape

3. After connecting a cable to a unit, tighten the cable gland cap firmly and use the insulation tape to fully cover the cable gland.

Figure 2-67: Waterproofing an external connection

FOR REGULATORY REVIEW

2.3 On-board

2.3.1 Overview

The FiberinMotion solution uses shark fin antennas for its mobile units, and relies on antenna orientation to differentiate the radio streams enough so as to enable MIMO.

General Guidelines

- Locate the antennas on the roof of the locomotive, as close as possible to each end of the locomotive.
- Place the TMU as close as possible to the antennas. This will allow a 2m cable to be used to the antennas.

Power

- Recommended: Use RADWIN's PoE to supply power to the TMU
- Alternative: TMU can be powered via an 802.3at (PoE plus) switch

General Mounting Arrangement

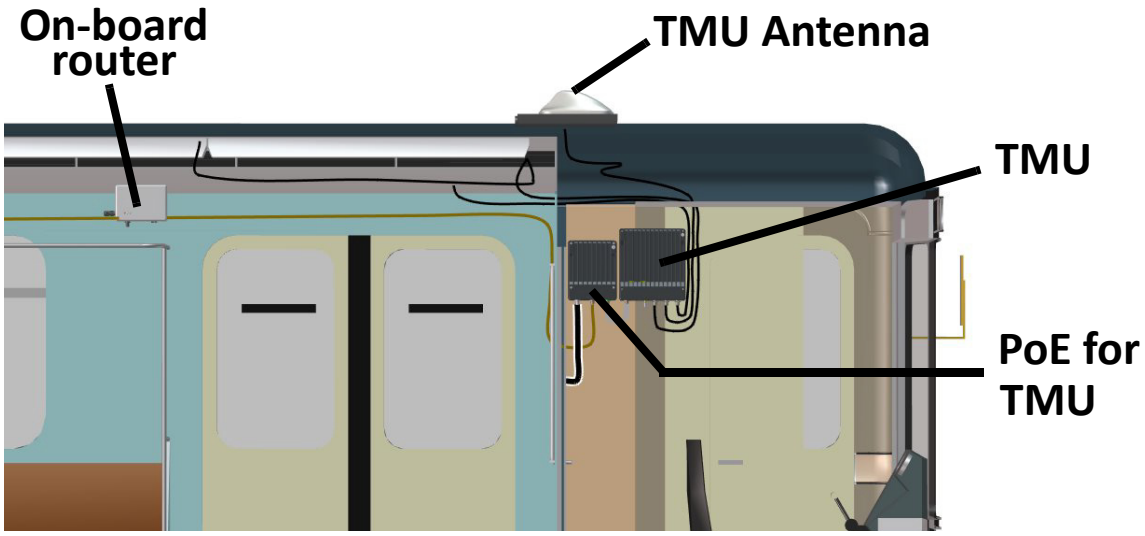

Figure 2-68: On-board general mounting arrangement

FOR REGULATORY REVIEW

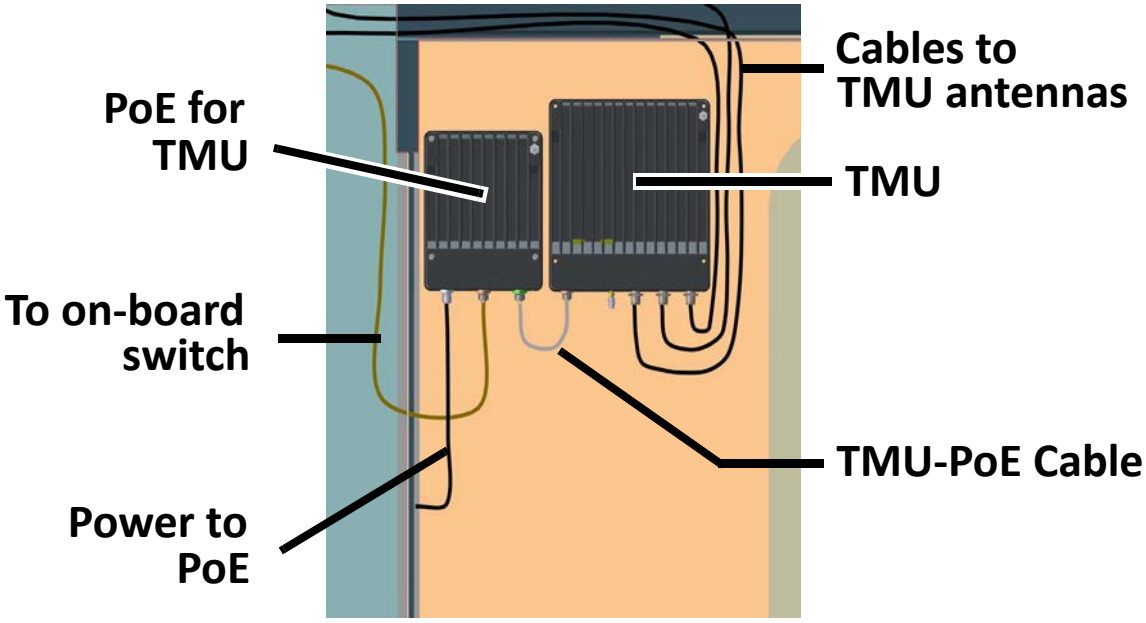

Figure 2-69: On-board general mounting arrangement - detail view

2.3.2 TMU Mounting

The TMU can be mounted in a 19 in rack, on a shelf, or on a wall. When mounting on a 19 in rack, use the specially-designed TMU-PoE drawer.

TMU Mounting on a Shelf

The TMU can be placed in any convenient horizontal surface, such as a shelf. Fasten the unit and its PoE properly. Make sure the TMU and PoE are completely on the shelf.

FOR REGULATORY REVIEW

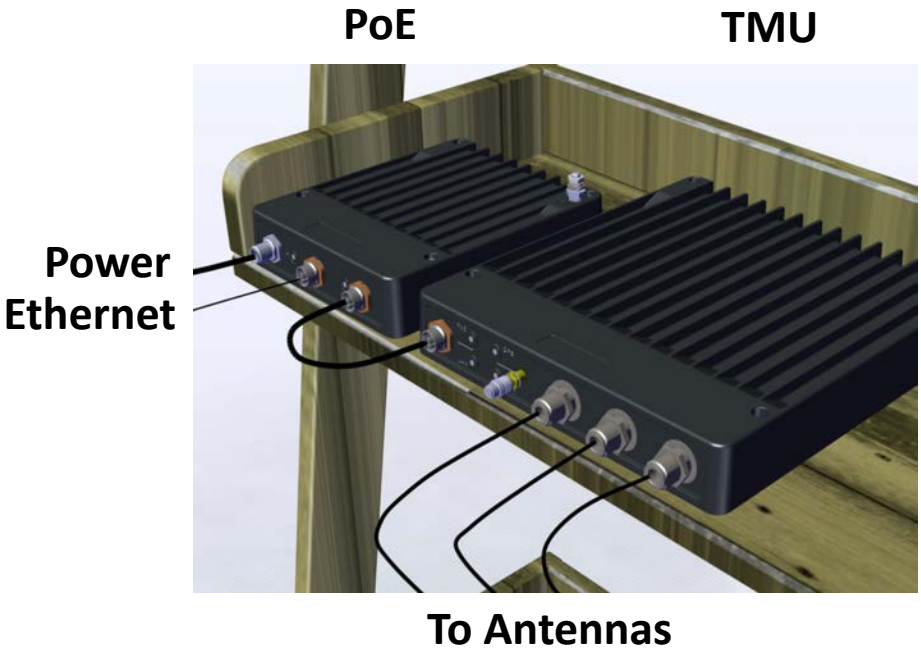

Figure 2-70: TMU mounted on a shelf

TMU Mounting on a Wall

The TMU can be mounted an a wall with proper support. Use the mounting holes and customer-supplied screws to fasten the unit to a wall.

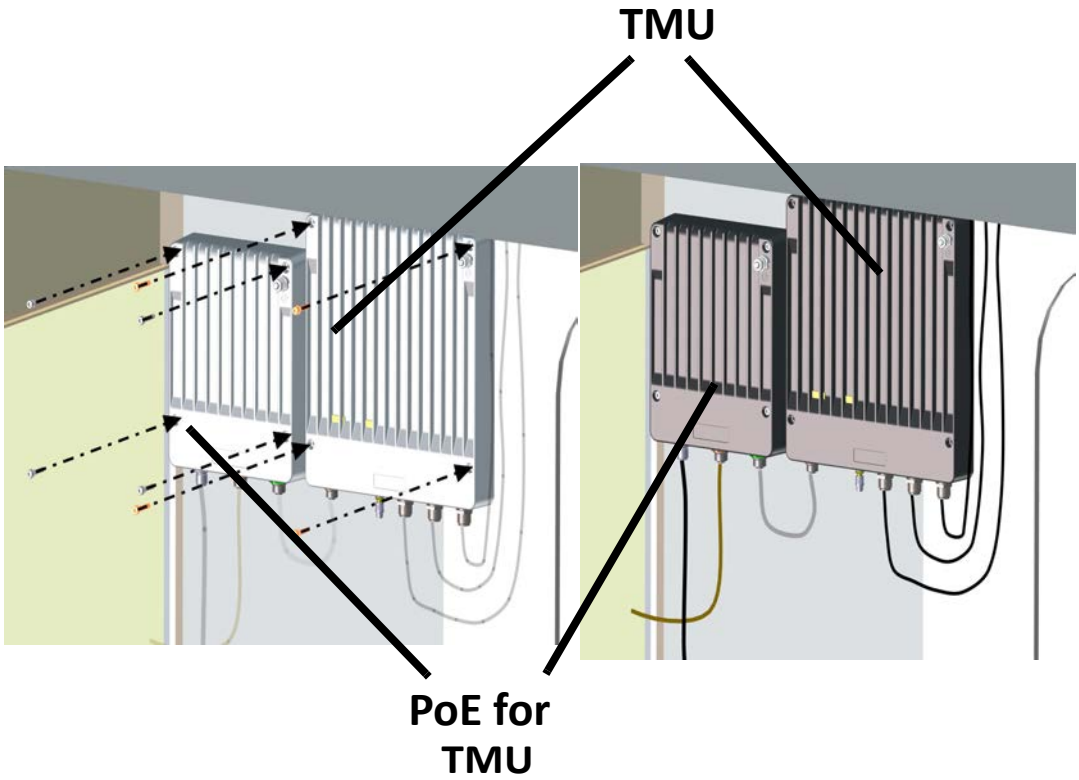

Figure 2-71: TMU and PoE mounted on a wall

FOR REGULATORY REVIEW

TMU Mounting Using the TMU-PoE Drawer

The TMU-PoE drawer is used to mount both the TMU and the PoE together. Carry out the following steps to mount both units:

1. Choose a site for the TMU-PoE drawer as close as possible to the on-board antennas and on-board power supply. Make sure there is at least 12 cm (5 in) of rack space.
2. Open the package, remove the TMU-PoE drawer from the packing styrofoam, and cut and discard the two black straps holding the mounting slides in place.
3. Check the contents:

Table 2-4: TMU-PoE drawer package contents

Item No.	Description	Quantity
1	Tray	1
2	DC-TMU Jumper cable	1
3	Allen wrench (M4)	1
4	Allen screws (M4x22)	8
5	Spring washers for Allen screws	8
6	DIN screws (M5x16)	12
7	Black finishing washers for M5 screws	12
8	Mechanical cage/nuts for M5 screws	12

FOR REGULATORY REVIEW

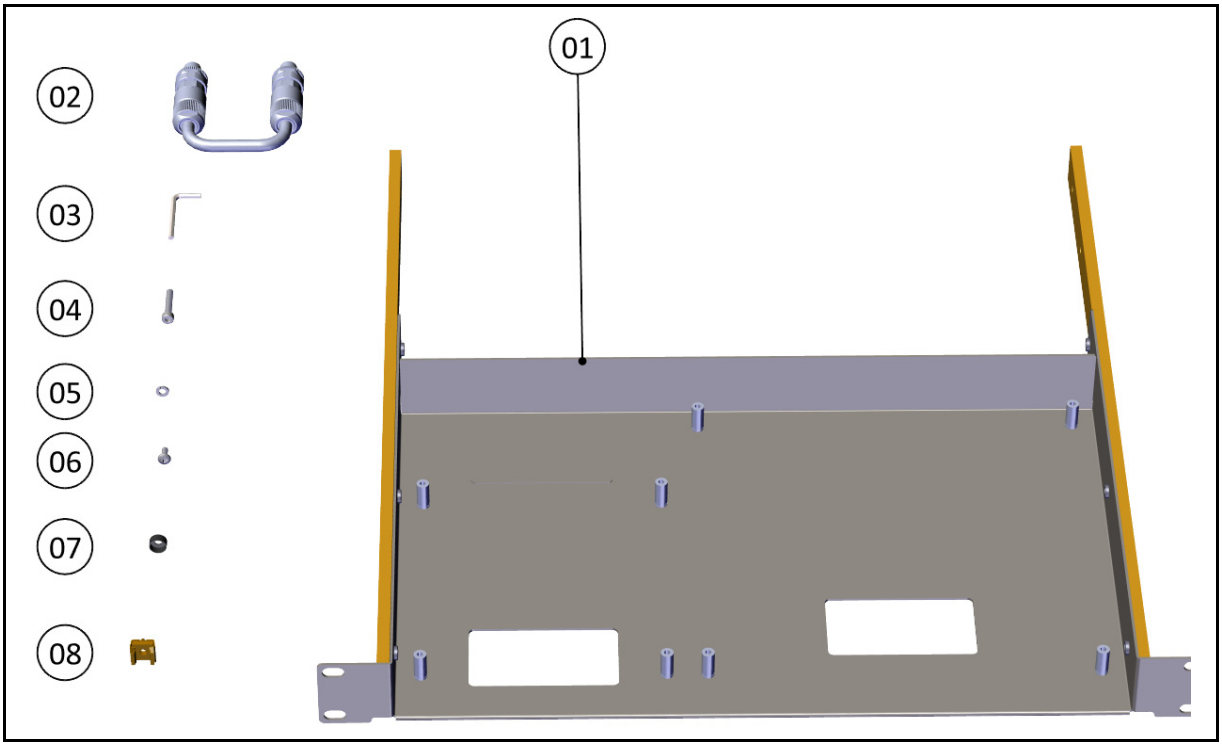

Figure 2-72: TMU-PoE drawer contents

FOR REGULATORY REVIEW

4. Detach the mounting slides from the TMU-PoE drawer: Pull each slide out until it is stopped by the locking lever. Press the locking lever to release the slide, and pull slide out completely.

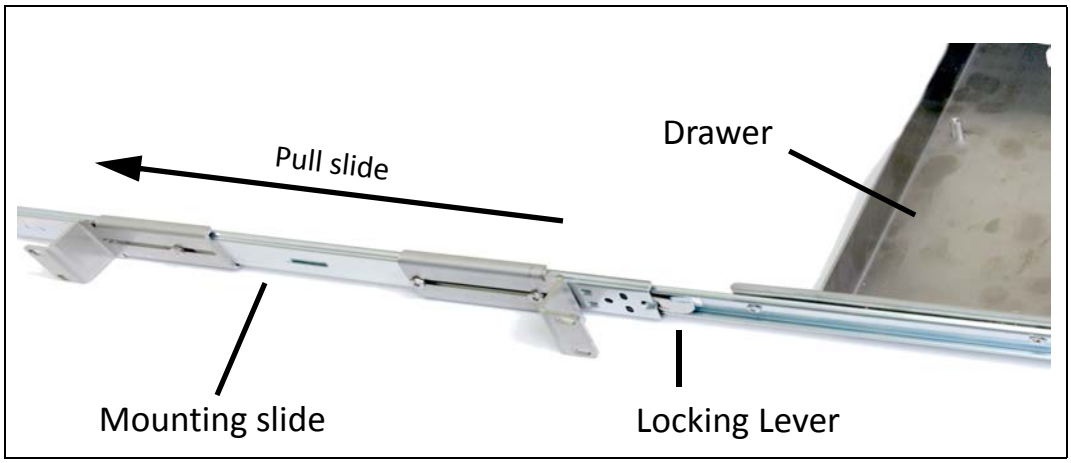

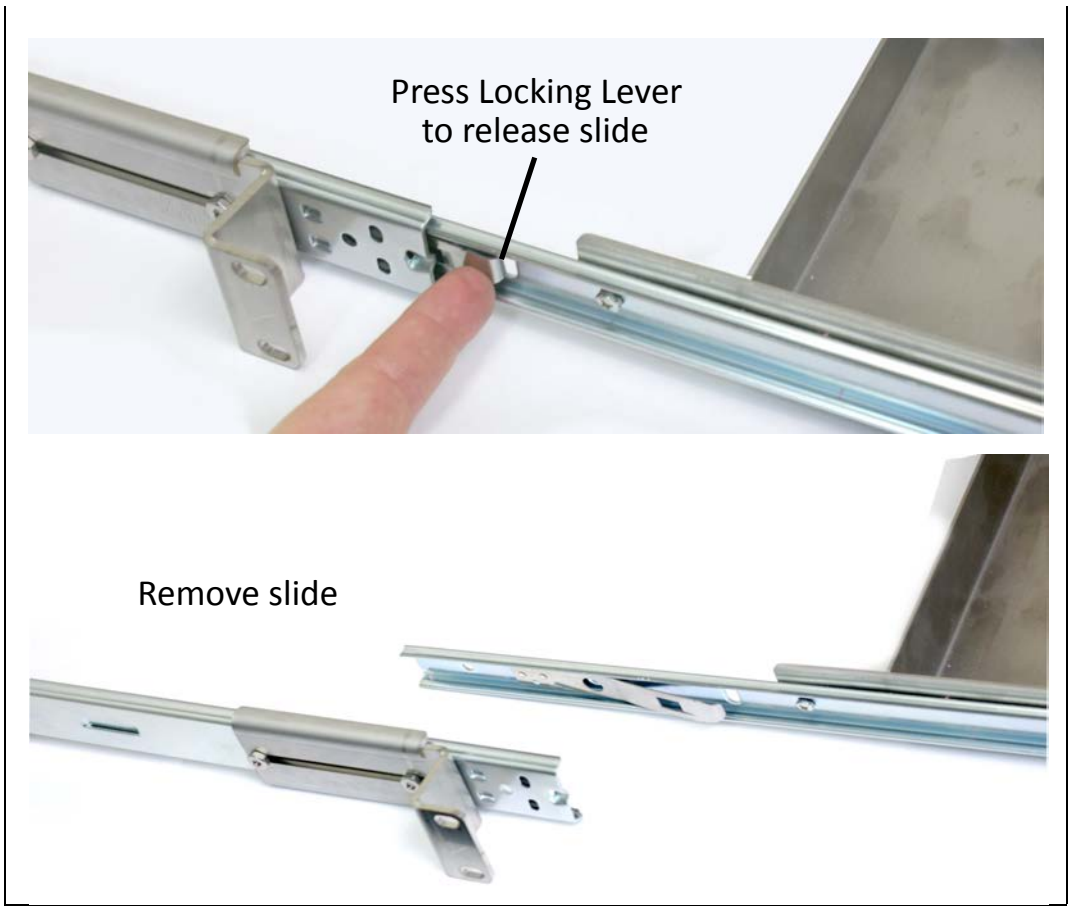

Figure 2-73: Remove the mounting slides from the TMU-PoE drawer.

FOR REGULATORY REVIEW

5. Measure the distance between vertical rails of the rack.

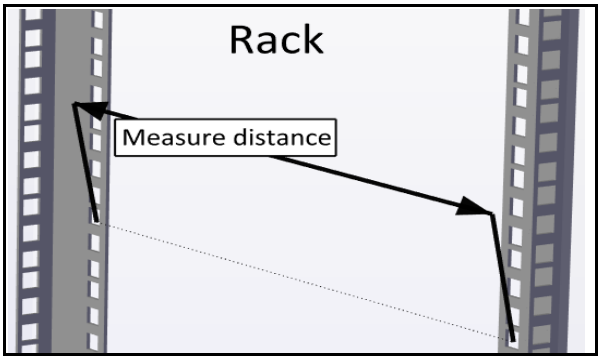

Figure 2-74: Measure distance between vertical rails

6. Adjust the location of the rear mounting flange of the first mounting slide so that the distance between the holes of the mounting flanges are the same as the distance you measured in the previous step.

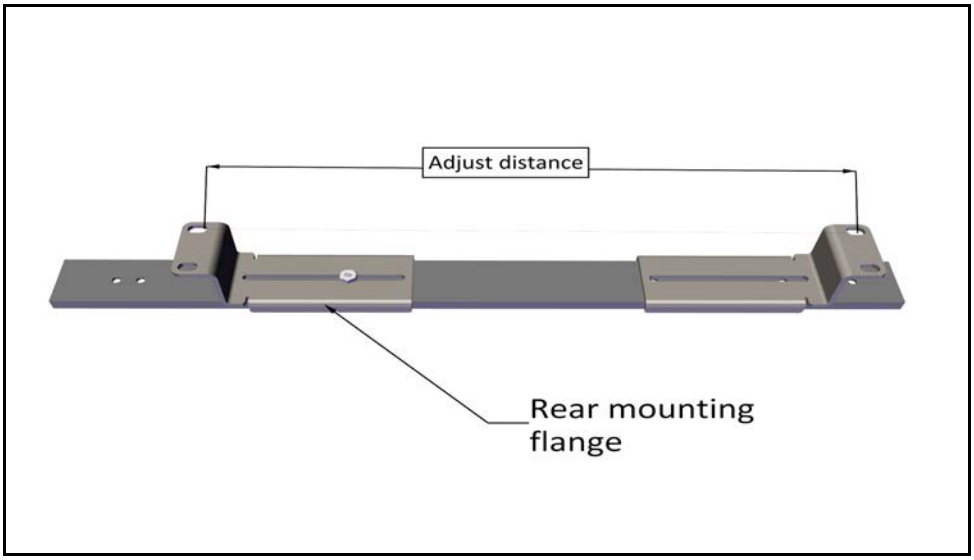

Figure 2-75: Adjust distance of rear mounting flange

FOR REGULATORY REVIEW

7. Place the second slide next to the first and adjust its rear mounting flange so that the distance between the flanges are the same as that of the first slide.

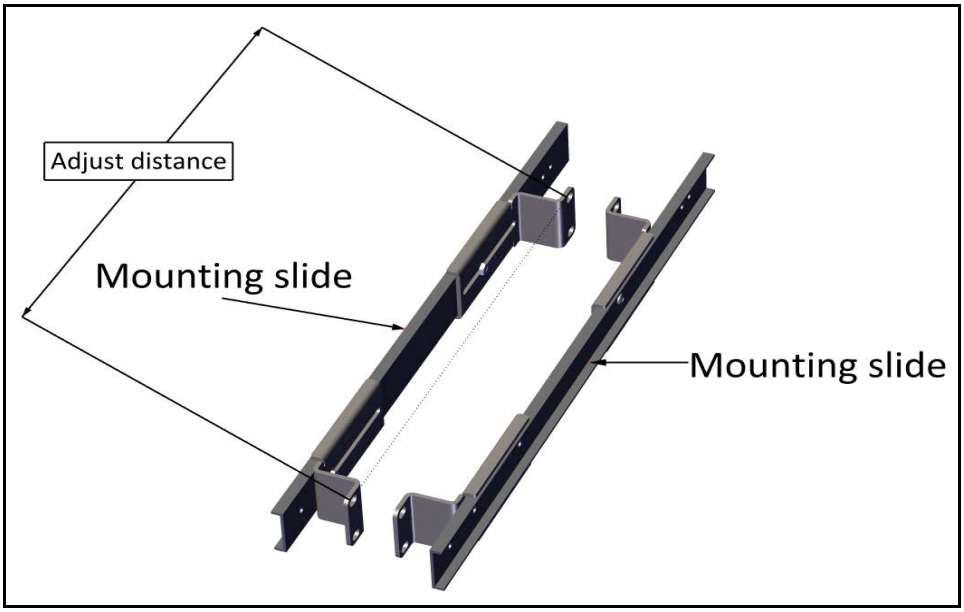

Figure 2-76: Adjust distance of mounting flange on second slide

8. Insert 8 mechanical cage nuts in the appropriate holes in the 19 in rack: 4 on each side of the rack.

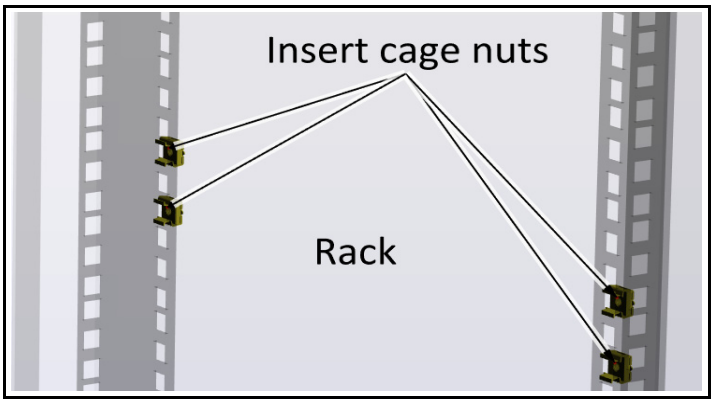

Figure 2-77: Inserting cage nuts (one side shown)

FOR REGULATORY REVIEW

9. Place each mounting slide with the stopping flap towards the rear of the rack, and using the Philips screws with the black washers, fasten the mounting slides to the cage nuts and tighten.

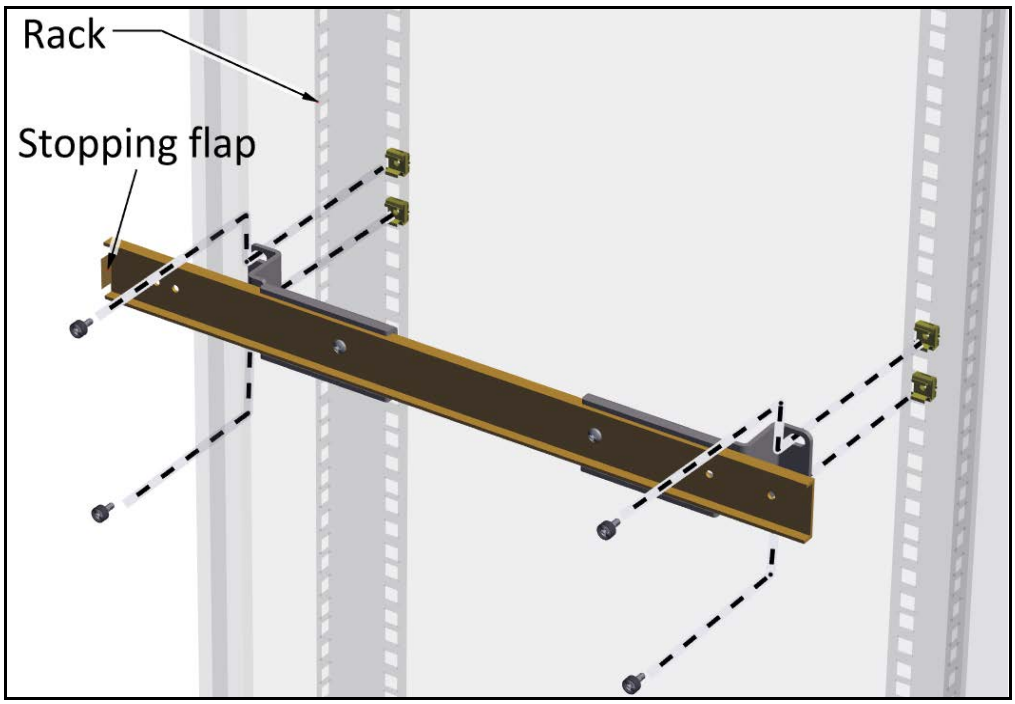

Figure 2-78: Placing and fastening mounting slide

10. Once both mounting slides are fastened tightly on the rack, insert the drawer as follows:
    a. Place the framework arms of the drawer into the mounting slides carefully. Make sure they are straight.
    b. Push back the drawer until the framework arms touch the ball-bearing grey housing.
    c. While pressing outwards on both ball-bearing grey housings, push the drawer in further until the framework arms engage the ball-bearing housings.
    d. Further push the drawer until the locking lever stops it.
    e. Release the locking levers, and push the drawer in all the way, even through some resistance towards the end.

FOR REGULATORY REVIEW

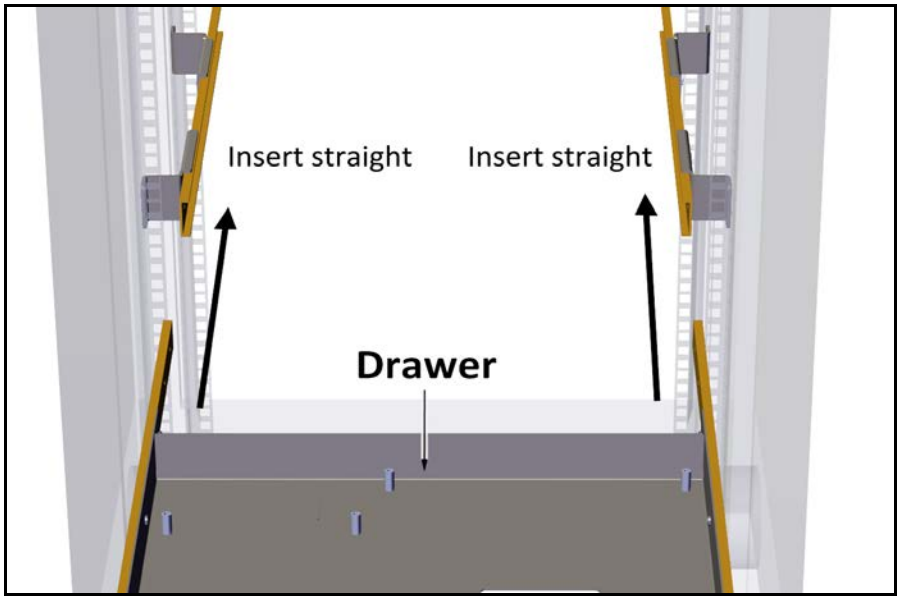

Figure 2-79: Inserting the drawer: Place arms straight

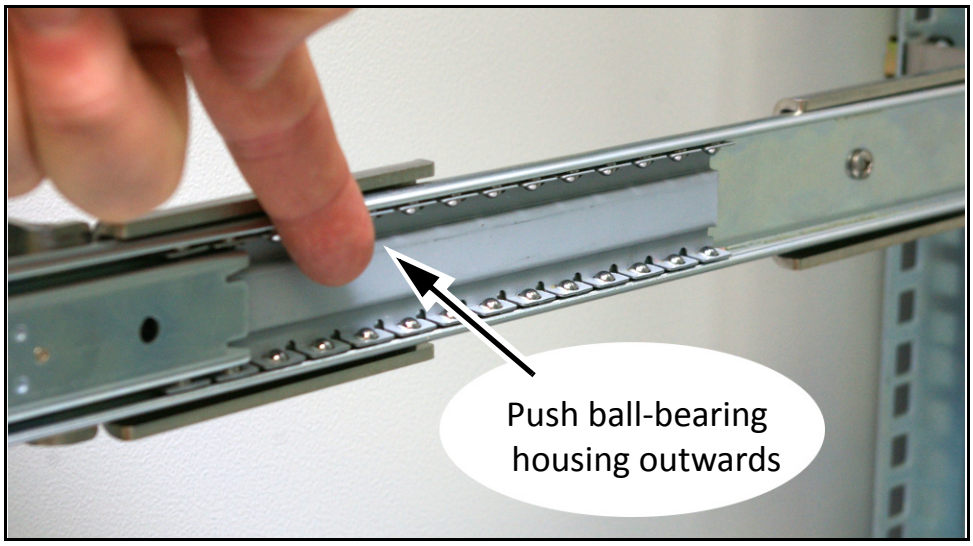

Figure 2-80: Inserting the drawer: Push ball-bearing housings outwards

FOR REGULATORY REVIEW

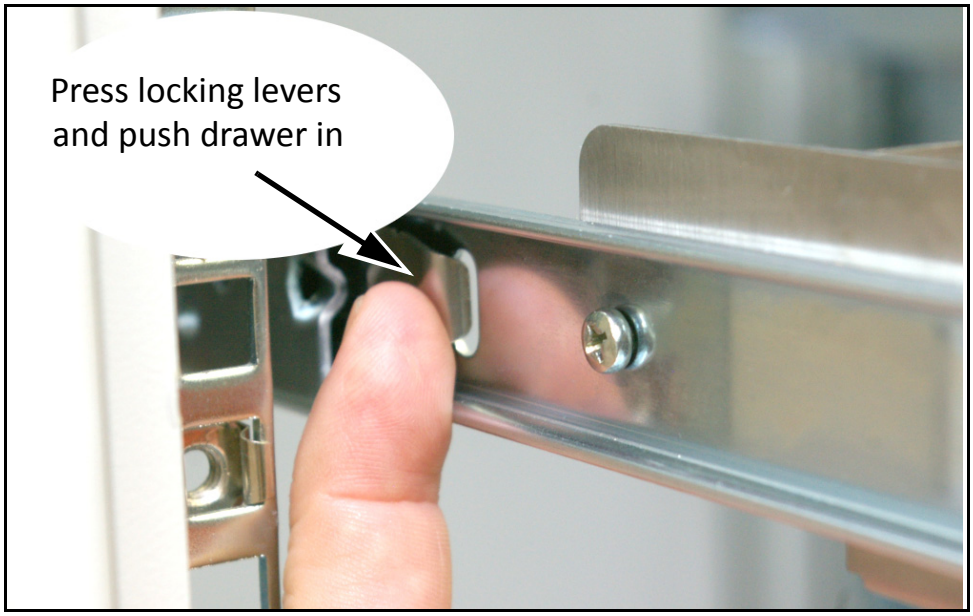

Figure 2-81: Inserting the drawer: Release locking levers

11. Insert the other 4 cage nuts in the appropriate holes in the front side of the vertical rails.
12. Using the other 4 Philips screws with the black washers, secure the drawer to the front side of the vertical rails of the rack.

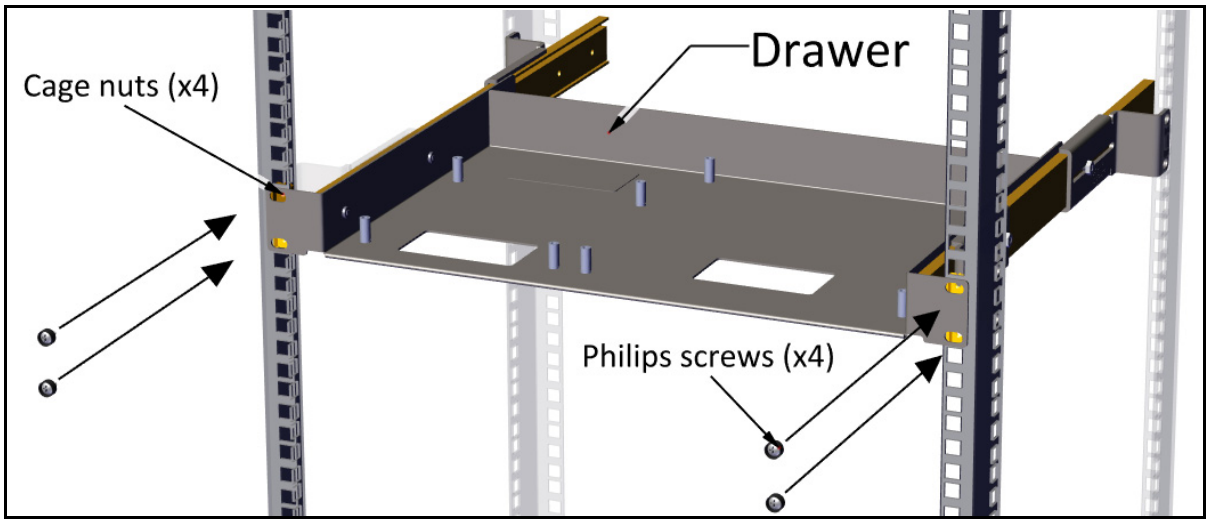

Figure 2-82: Secure drawer to the front side of rack

FOR REGULATORY REVIEW

13.Attach PoE and TMU to drawer as follows:

a. Remove grounding lugs from both units (they interfere with the drawer and are not needed for a drawer installation).

b. Place PoE over the pins of the left side of the drawer as shown, and attach using hex (Allen) screws.

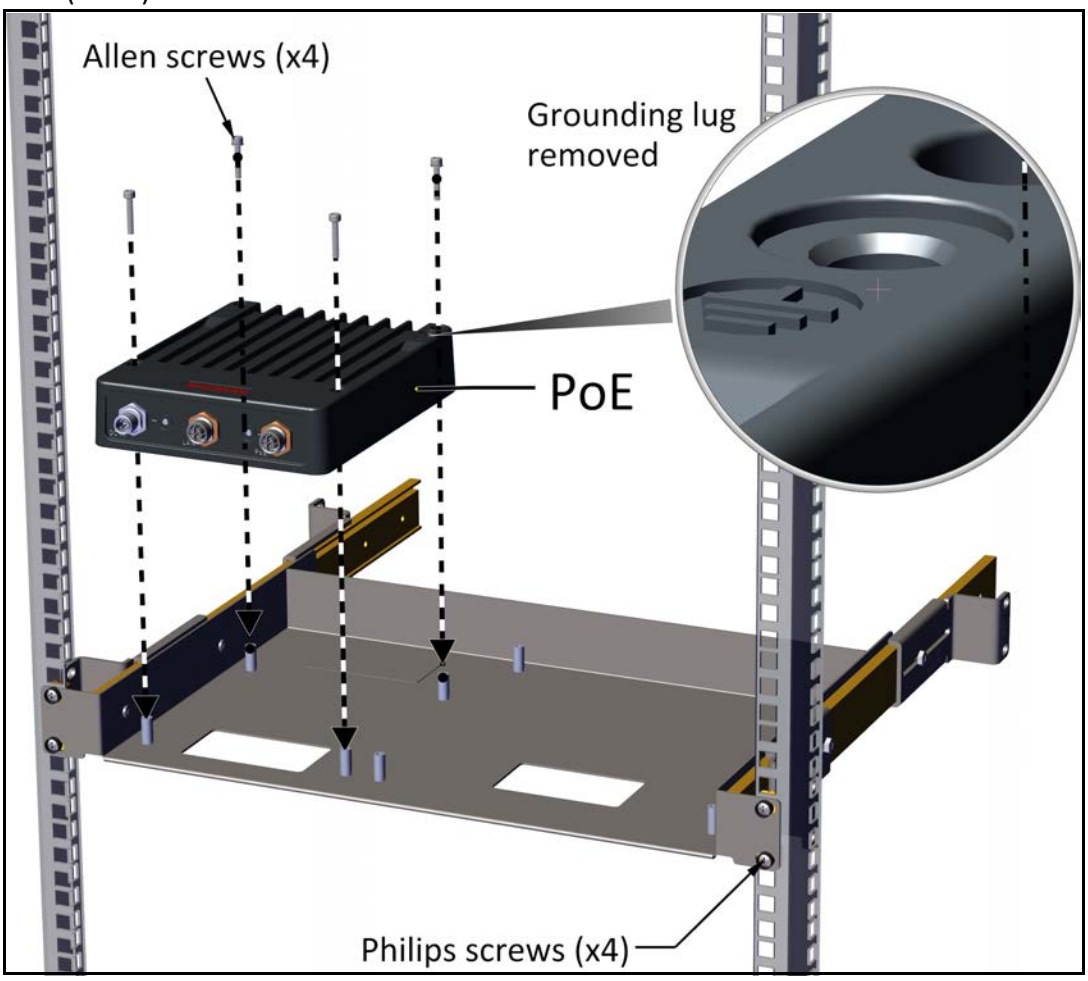

Figure 2-83: Attaching PoE to drawer

FOR REGULATORY REVIEW

c. Place TMU over the pins on the right side of the drawer as shown, and attach using hex (Allen) screws.

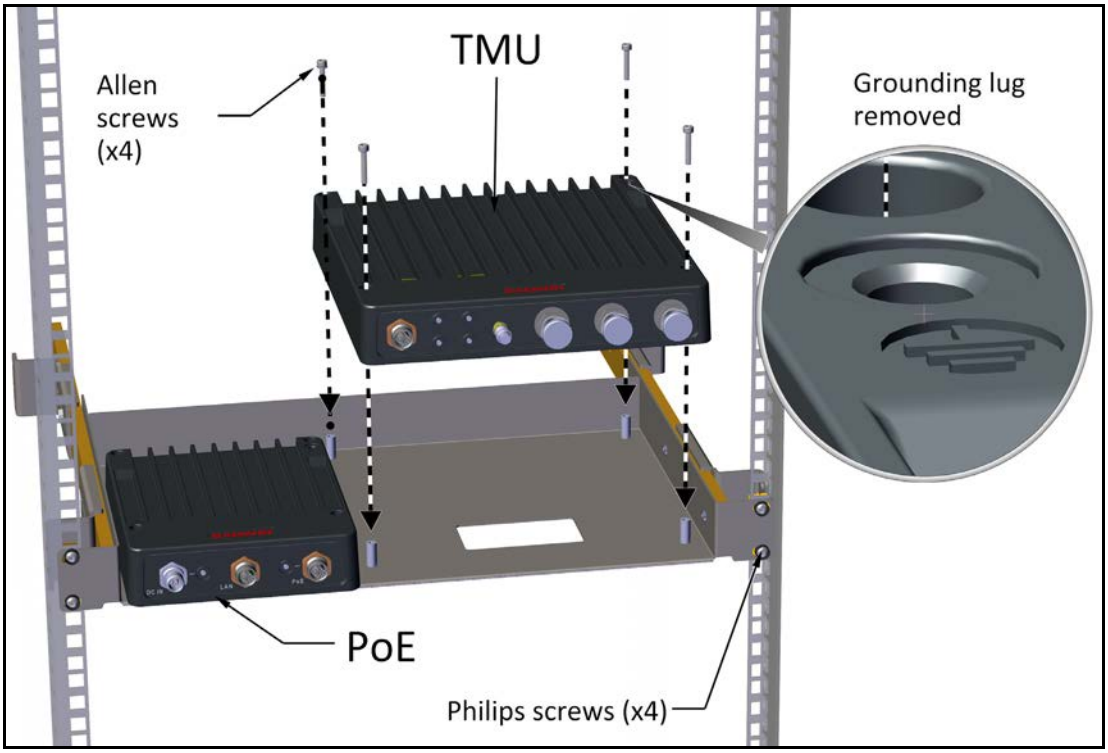

Figure 2-84: Attaching TMU to drawer

Caution

The TMU and PoE, when mounted in the TMU-PoE drawer, are grounded via the mounting pins, through the 19 in rack.
Make sure the rack you are using is grounded properly.

2.3.3 PoE for the TMU

The units can be mounted in a 19 in rack, a shelf, or on a wall.

Mounting with the TMU-PoE drawer

The TMU-PoE drawer can be used to mount both the TMU and the PoE. Follow the instructions in "TMU Mounting Using the TMU-PoE Drawer" on page 2-37.

Mounting on a DIN rail

Carry out the following steps to mount the PoE on a DIN rail:

FOR REGULATORY REVIEW

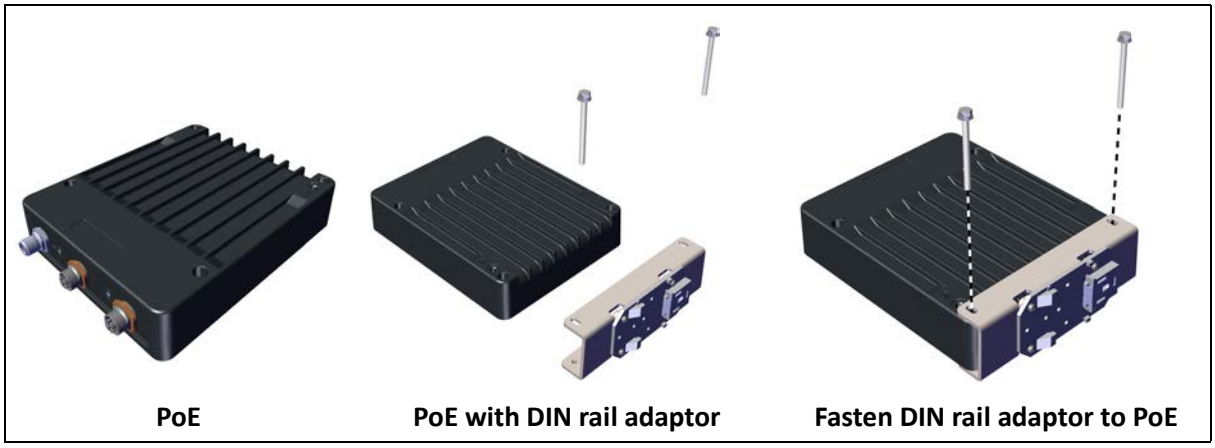

Figure 2-85: Attaching a DIN rail adaptor to the PoE

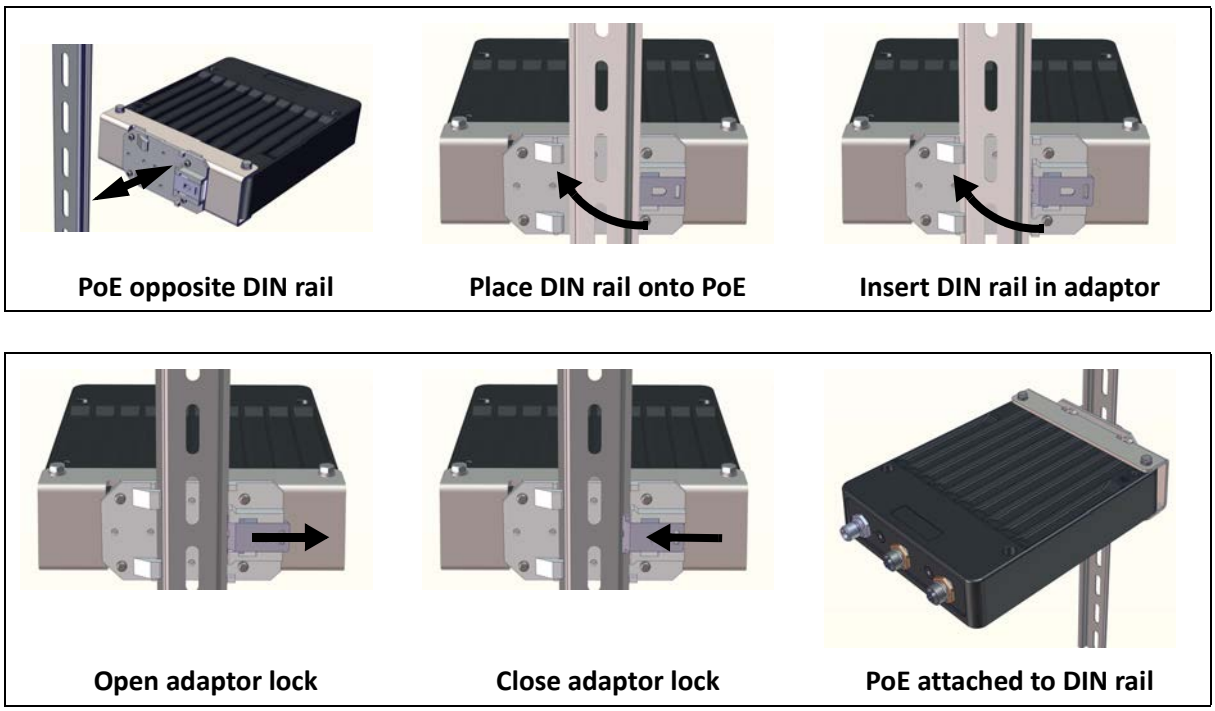

Figure 2-86: Attaching a PoE to a DIN rack

2.3.4 TMU Antennas

Each TMU requires three “Shark-Fin” antennas mounted on the roof of the locomotive as close as possible to the TMU:

FOR REGULATORY REVIEW

Figure 2-87: "Shark-Fin" antenna - bottom and top views

Note the following:

- The antennas should be mounted as close to the TMU as possible.
- Try to minimize obstructions between the antennas and the front of the train such as air-conditioner units, electronic route number display boxes and the like.
- Mount Antenna 1 and Antenna 2 on the edge of the locomotive at a 45° angle, as shown in Figure 2-88. Also see TMU - TBS antenna alternative orientation options on page 2-48 for other possibilities.
- Mount Antenna 3 (center) at a 90° angle (directly up) as shown in Figure 2-88.
- Connect the antenna ports of the TMU to the antennas as shown in Figure 2-90.

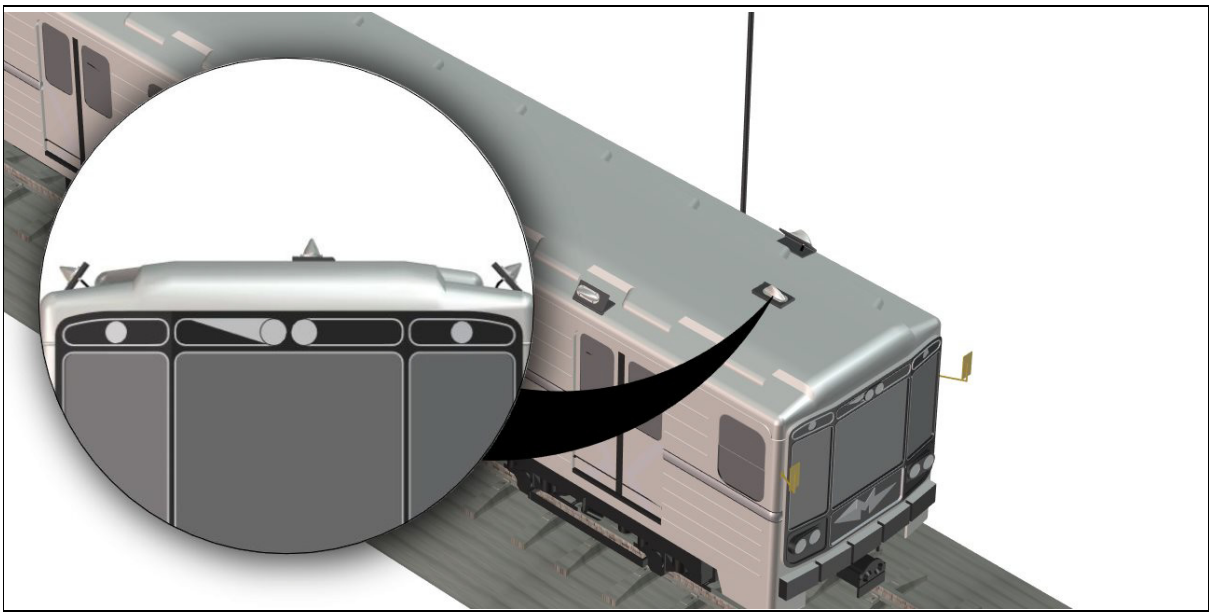

Figure 2-88: TMU antenna mounting configuration on roof

TMU - TBS antenna alternative orientation options

Although Figure 2-88, *"TMU antenna mounting configuration on roof"* shows the most common method of mounting the TMU antennas, there are other options, and these are shown here:

FOR REGULATORY REVIEW

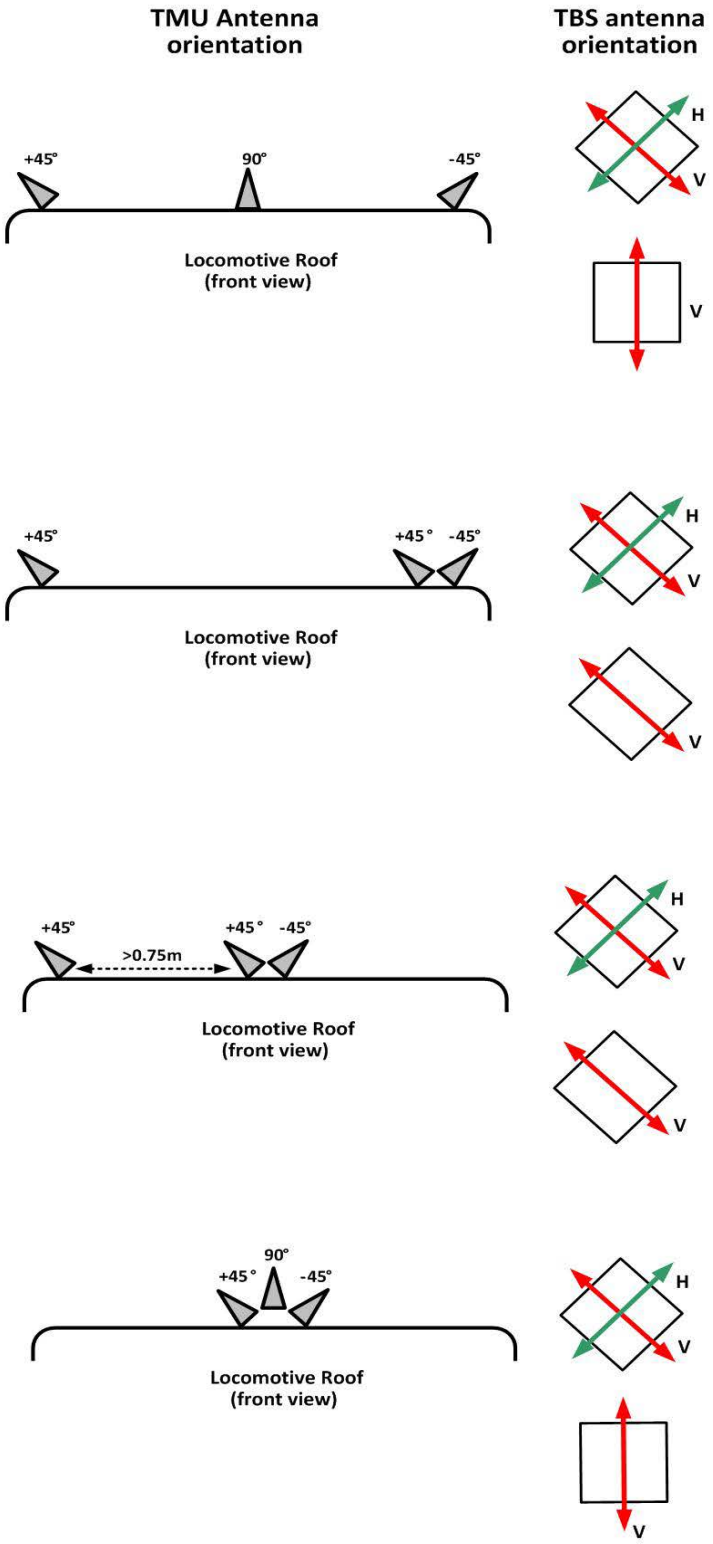

Figure 2-89: Antenna Orientation Options

FOR REGULATORY REVIEW

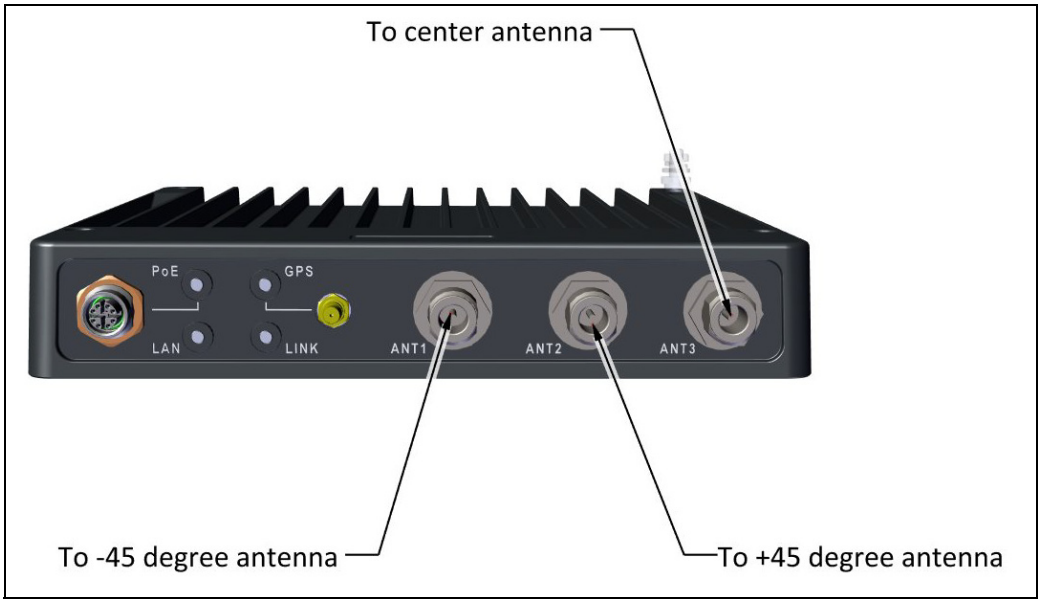

Figure 2-90: TMU antenna port connection scheme

4. Connect the RF cable as shown below:

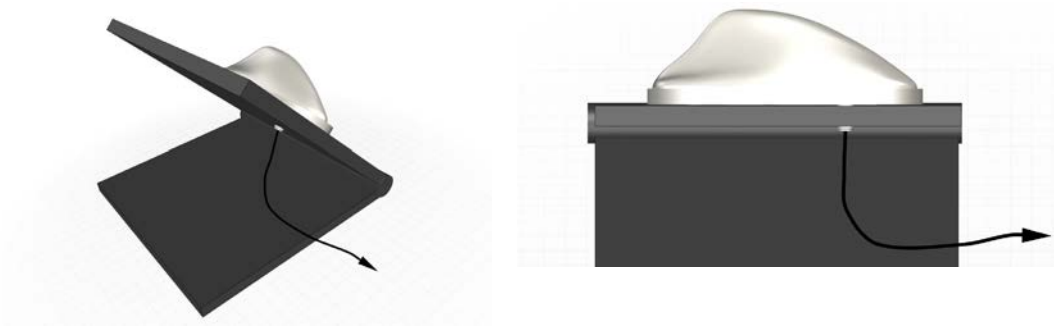

Figure 2-91: Connect RF cable to TMU antenna (on mount)

FOR REGULATORY REVIEW

2.3.5 TMU External Connections

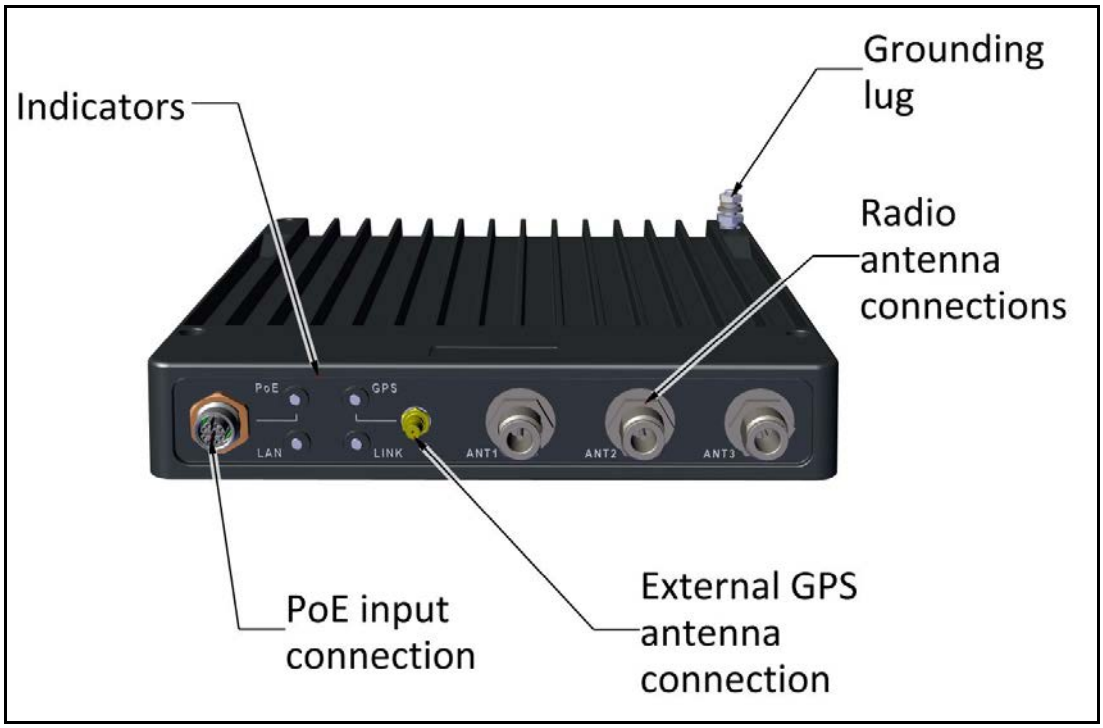

Figure 2-92: TMU - External Connections

Table 2-5: TMU LED Indicators

LED Location	LED Name	Off	On	Blinking
	PoE	No power	Power is being supplied	N.A.
	GPS	No GPS signal or No power	GPS signal is being received	N.A.
	LAN	No LAN connection or No power	A LAN connec-tion exists, but no data is flowing	Data is flowing via the LAN connection
	LINK	No power	Active wireless link exists	Searching for a wireless link

2.4 Grounding

All RADWIN products must be grounded during operation. In addition:

- All units should be grounded by a wire with diameter of at least **10 AWG** by skilled and trained technicians.

FOR REGULATORY REVIEW

Units must be properly grounded to a Protective Ground in accordance with the Local Electrical Regulations

- Rack-mounted equipment should be mounted only in grounded racks and cabinets.

Further, you should -

- Always make the ground connection first and disconnect it last
- Never connect telecommunication cables to ungrounded equipment
- Ensure that all other cables are disconnected before disconnecting the ground

TBS and OSU

There is a grounding lug on the TBS and OSU as shown in Figure 2-93. Ground it using 10 AWG wire.

Connect the shield of the antenna coaxial cable to the ground of the structure in accordance with 6.2gand 6.2l of IEC 60728-11.

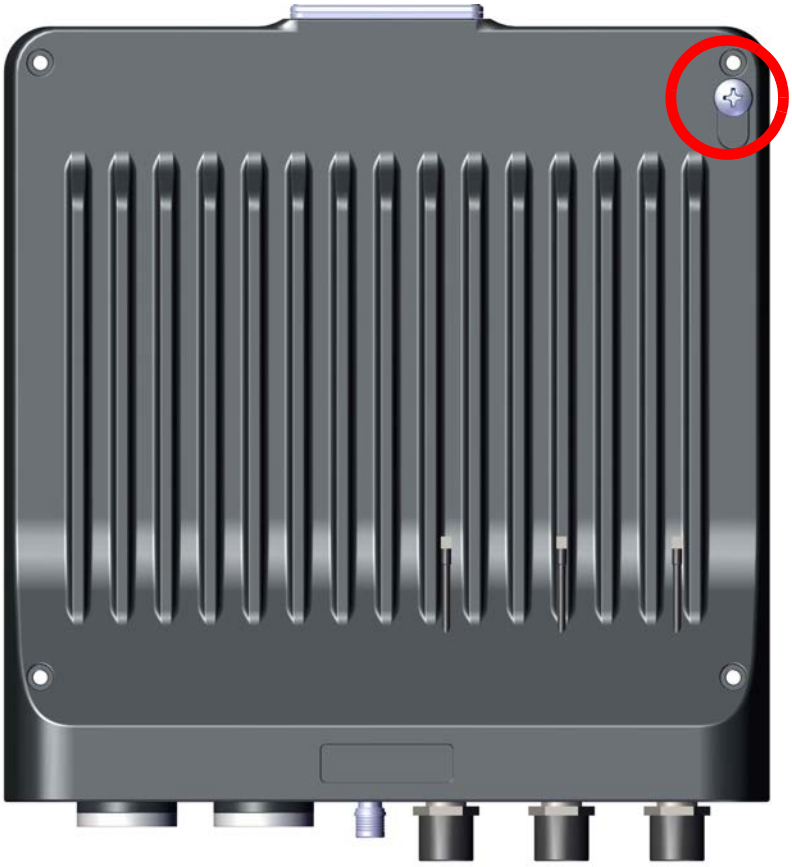

Figure 2-93: TBS/OSU: Grounding lug location

TMU

The grounding lug for the TMU is shown in Figure 2-94. Ground it using 10 AWG wire.

FOR REGULATORY REVIEW

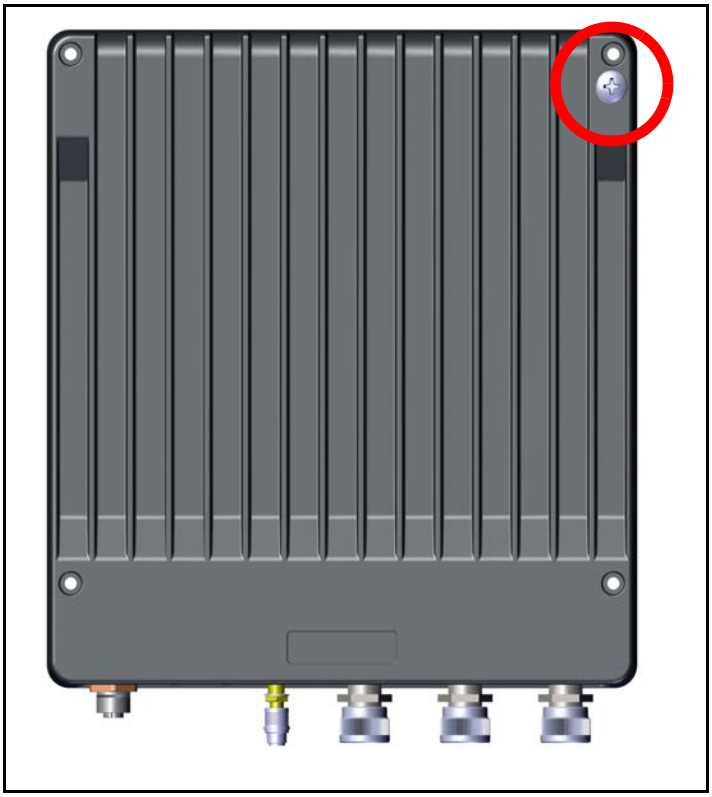

Figure 2-94: TMU: Grounding lug location

When mounted in a 19 in rack, the TMU is grounded via the rack.

FinM PoE

There is a grounding lug on the FinM PoE as shown in Figure 2-95. Ground it using 10 AWG wire.

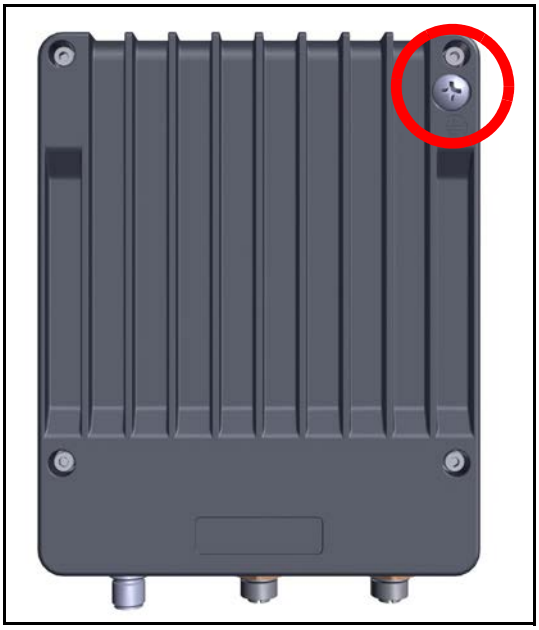

Figure 2-95: PoE: Grounding lug location

When mounted in a 19in rack, the PoE is grounded via the rack.

FOR REGULATORY REVIEW

GSU

There is a grounding lug on the GSU as shown in Figure 2-97. Ground it using 10 AWG wire.

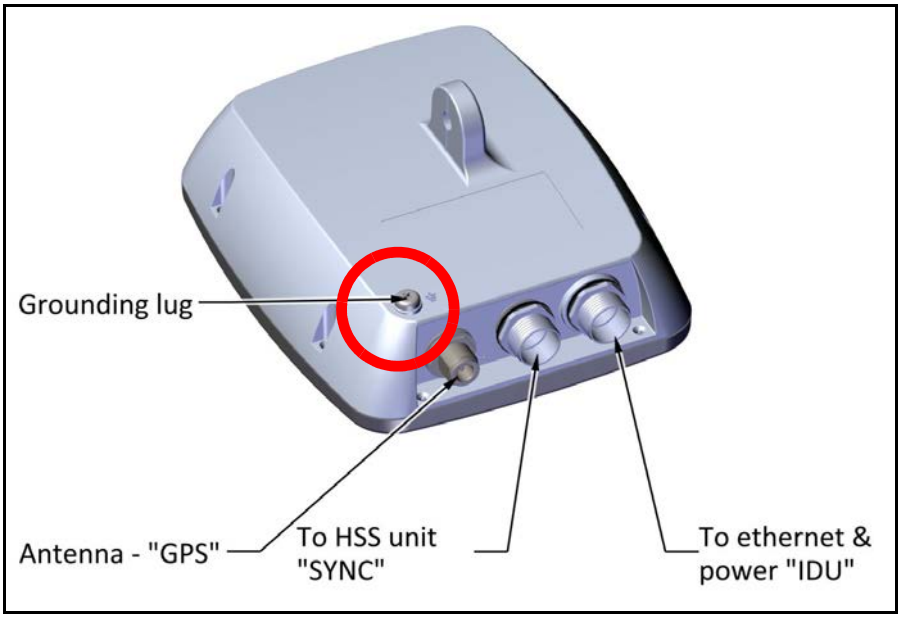

Figure 2-96: GSU: Grounding lug location

External PoE

There is a grounding lug on the external PoE as shown in Figure 2-97. Ground it using 10 AWG wire.

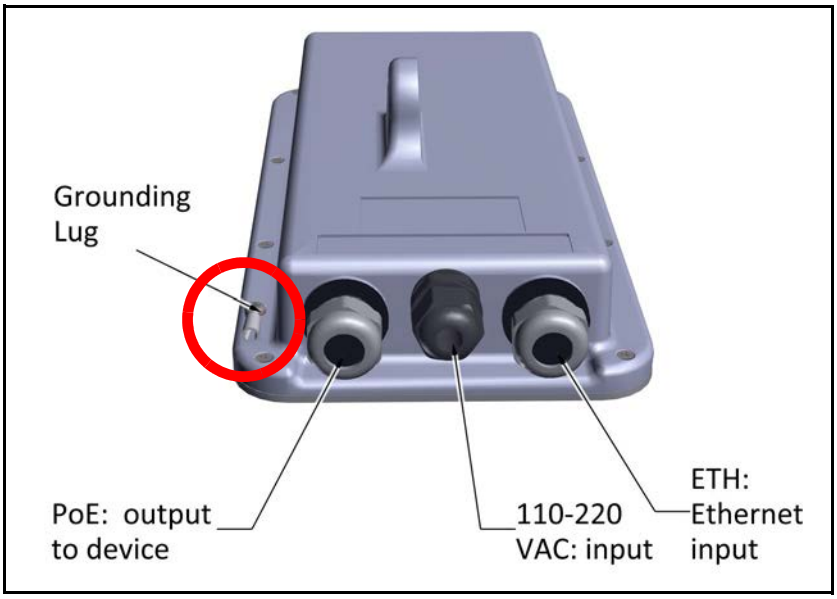

Figure 2-97: PoE: Grounding lug location

FOR REGULATORY REVIEW

ISU

The ISU is grounded via its ground connection on its front panel.

Figure 2-98: ISU: Grounding lug location

FOR REGULATORY REVIEW

Appendix A: Antenna Guidelines

A.1 For Deployment in USA/Canada

The TBS and TMU devices bear the following identifications on their label:

Contains FCC ID: Q3K-5XACMOD3C

Contains IC: 5100A-5XACMD3CN

Only the antennas shown in the tables below are approved for use in this system. Use of antennas not in the list invalidate regulatory approval and violate the warranty terms of RADWIN, Ltd. The antennas must be installed so as to provide a minimum separation distance from bystanders as specified in the tables below:

A.1.1 USA and Canada

Table A-1: Approved Antennas - 5725-5850 MHz Band

Cat. No.	Type	Gain (dBi)	Dir BW	Tx Power per Chain	Min. Safe Distance (cm)
RW-9105-5158	Dual Polarization-Directional	19.0	17.0°	12.0	78.0
RW-9401-5002	Vehicular Single-directional	12.5	50.0°	18.5	37.0
AT0058760	Single Polarization-Directional	18.0	18.0°	13.0	70.0
RW-9314-5158	Yagi	14.0	30.0°	17.0	44.0
RW-9401-5004	Vehicular Bi-directional	13.0	36.0°	18.0	39.0

Note: All antennas have 50 Ohm impedance.

FOR REGULATORY REVIEW

Table A-2: Approved Antennas - 5470-5725 MHz Band

Cat. No.	Type	Gain (dBi)	Dir BW	Tx Power per Chain	Min. Safe Distance (cm)
RW-9105-5158	Dual Polarization-Directional	19.0	17.0°	6.0	20
RW-9401-5002	Vehicular Single-directional	12.5	50.0°	12.5	20
AT0058760	Single Polarization-Directional	18.0	18.0°	7.0	20
RW-9314-5158	Yagi	14.0	30.0°	11.0	20
RW-9401-5004	Vehicular Bi-directional	13.0	36.0°	12.0	20

Note: All antennas have 50 Ohm impedance.

A.1.2 USA Only

Table A-3: Approved Antennas 5150-5250 MHz Band FCC Base Station (Wayside)

Cat. No.	Type	Gain (dBi)	Dir BW	Tx Power per Chain	Min. Safe Distance (cm)
RW-9105-5158	Dual Polarization-Directional	19.0	17.0°	6.0	20
RW-9314-5158	Yagi	14.0	30.0°	11.0	20
AT0058760	Single Polarization-Directional	18.0	18.0°	7.0	20

Note: All antennas have 50 Ohm impedance.

FOR REGULATORY REVIEW

Table A-4: Approved Antennas 5150-5250 MHz Band FCC Mobile Unit (On-Board)

Cat. No.	Type	Gain (dBi)	Dir BW	Tx Power per Chain	Min. Safe Distance (cm)
RW-9314-5158	Yagi	14.0	30.0°	5.0	20
RW-9401-5002	Vehicular Single-directional	12.5	50.0°	6.5	20
RW-9401-5004	Vehicular Bi-directional	13.0	36.0°	6.0	20

Note: All antennas have 50 Ohm impedance.

A.1.3 ‘Canada Only

Figure A-1: Approved Antennas 5150-5250 MHz Band ISED Base Station (low power - indoor)

Cat. No.	Type	Gain (dBi)	Dir BW	Tx Power per Chain	Min. Safe Distance (cm)
RW-9105-5158	Dual Polarization-Directional	19.0	17.0°	-1.0	20
RW-9314-5158	Yagi	14.0	30.0°	4.0	20
AT0058760	Single Polarization-Directional	18.0	18.0°	0.0	20

Note: All antennas have 50 Ohm impedance.

FOR REGULATORY REVIEW

Table A-5: Approved Antennas 5150-5250 MHz Band ISED Mobile Unit (On-Board)

Cat. No.	Type	Gain (dBi)	Dir BW	Tx Power per hain	Min. Safe Distance (cm)
RW-9314-5158	Yagi	14.0	30.0°	-4.0	20
RW-9401-5002	Vehicular Single-directional	12.5	50.0°	-2.5	20
RW-9401-5004	Vehicular Bi-directional	13.0	36.0°	-3.0	20

Note: All antennas have 50 Ohm impedance.

Warning

This radio transmitter (Contains IC: 5100A-5XACMD3CN) has been approved by Innovation, Science and Economic Development Canada to operate with the antenna types listed above, with the maximum permissible gain indicated. Antenna types not included in this list that have a gain greater than the maximum gain indicated for any type listed are strictly prohibited for use with this device.

A.2 For Deployment in Japan

Only the antennas shown in the table below or antennas of the same type with lower gain are approved for use in this system. The antennas must be installed so as to provide a minimum separation distance from bystanders as specified in the table below:

Table A-6: Approved Antennas - Japan

Cat. No.	Type	Gain (dBi)	Dir BW	Freq. Band (MHz)	Tx Power per Chain (dBm)		Min. Safe Distance (cm)
					2X2	3X3	
RW-9061-5001	Dual Polarization-Sectorial	14.0	90.0°	4900-5100	16.0	13.0	20.0
RW-9061-5002	Dual Polarization-Sectorial	16.5	60.0°	4900-5100	13.5	10.5	20.0
RW-9061-5004	Dual Polarization-Sectorial	11.0	120.0°	4900-5100	17.0	14.0	20.0

FOR REGULATORY REVIEW

Table A-6: Approved Antennas - Japan (Continued)

Cat. No.	Type	Gain (dBi)	Dir BW	Freq. Band (MHz)	Tx Power per Chain (dBm)		Min. Safe Distance (cm)
					2X2	3X3	
RW-9401-5002	Vehicular Single-directional	12.5	50.0°	4900-5100	---	14.0	20.0
RW-9401-5004	Vehicular Bi-directional	13.0	36.0°	4900-5100	15.0	12.0	20.0
RW-9401-5007	Omni Bi-directional	10.0	360.0°	4900-5100	18.0	14.0	20.0
RW-9402-5001	Omni-directional	10.0	360.0°	4900-5100	---	14.0	20.0
RW-9521-4958	Single Polarization-Sectorial	17.0	60.0°	4900-5100	---	7.0	20.0
RW-9531-5001	Single Polarization-Sectorial	15.0	120.0°	4900-5100	---	9.0	20.0
RW-9531-5002	Single Polarization-Sectorial	17.0	90.0°	4900-5100	---	7.0	20.0
RW-9613-4960	Dual Polarization-Sectorial	23.0	10.0°	4900-5100	13.0	10.0	20.0
RW-9622-5001	Dual Polarization-Sectorial	28.0	5.0°	4900-5100	7.0	4.0	20.0
RW-9721-5158	Dual Polarization-Sectorial	28.0	5.6°	4900-5100	7.0	4.0	20.0
RW-9732-4958	Dual Polarization-Sectorial	32.0	4.0°	4900-5100	3.0	0.0	20.0
RW-9601-4951	Single Polarization-Directional	18.0	20.0°	4900-5100	12.0	9.0	20.0
RW-9105-4958	Dual Polarization-Directional	16.0	20.0°	4900-5100	14.0	11.0	20.0

FOR REGULATORY REVIEW

Appendix B: Terminology

Table B-1: Terminology (Sheet 1 of 3)

Term	Description
Assured throughput	Actual number of timeslots allocated to a radio unit.
ACS	Automatic Channel Selection. Option that instructs the radio to choose which frequency to use. Enabling or disabling this option has various ramifications as shown in the documentation.
BFD	Bidirectional Forwarding Detection. A network protocol used to detect faults between two forwarding engines connected by a link.
BS	Base Station: a radio that can transmit and receive to more than one point. See also HBS
BW	Either beamwidth (of an antenna), or bandwidth, depending on the context.
CPE	Customer Premises Equipment
Dir	Directional
Diversity	A technique by which the reliability of a radio link is increased using multiple transmitting and receiving antennas, transmitting the same signal on all antennas.
Downlink	Data traffic from an HBS to an HSU, or Data traffic from an RT-A to an RT-B
DFS	Dynamic Frequency Selection
EACS	Enhanced ACS Mode: A method that prevents interference from RADAR installations. The unit is switched to a different frequency band.

FOR REGULATORY REVIEW

Table B-1: Terminology (Sheet 2 of 3)

Term	Description
EIRP	Equivalent (or Effective) Isotropically Radiated Power: The power that an antenna must emit to produce the peak power density in the direction of maximum antenna gain. In our cases, this is usually: System Tx Power + Antenna Gain - Cable Loss.
FAA	Federal Aviation Administration. A U.S. federal office that manages aviation regulations throughout the United States.
GRE	Generic Routing Encapsulation. A communication protocol used to establish a direct, point-to-point connection between network nodes. GRE lets two peers share data they wouldn't be able to share over the public network itself.
GRE Tunnel	A virtual point-to-point connection between two networks, using the GRE protocol to carry this out.
HBS	High capacity Base Station. Same as a BS
HMU	High capacity Mobility (subscriber) Unit. Similar to an HSU, but can be mobile.
ISU	Integrated Synchronization Unit: a network device that provides a synchronization signal to underground TBSs.
ITHO	Intra-train handover mechanism
MDL	Multiple Device Learning
MIMO	Multiple In, Multiple Out. A technique by which the capacity of a radio link is increased using multiple transmitting and receiving antennas, transmitting a different signal on all antennas.
MIR	Maximum Information Rate
Mobile (HSU)	A "mobile" HSU can move from location to location and provide service while it moves or when it is stationary.
ODU	Outdoor Unit: a generic term for any radio, and can usually be exchanged for HBS or HSU.
On-board	Items or subject matter that relates to the environment on or inside the train itself. Also called "Train Side"
PNAM	Predecessor Neighbor Advertisement Message
PPPoE	Point-to-Point Protocol over Ethernet
PtMP	Point to Multi-Point: link from an HBS to several HSUs
PtP	Point to Point

FOR REGULATORY REVIEW

Table B-1: Terminology (Sheet 3 of 3)

Term	Description
RSS	Radio Signal Strength
QoS	Quality of Service
Sector	A group of radios that consists of one HBS and several HSUs that communicate with the HBS.
SLA	Service Level Agreement - the basic agreement between the service provider and its customer regarding certain aspects of the service provided. For example, what should be the data rate, throughput, jitter of the line, who should pay what fees, the mean time between failure (MTBF) of the equipment, and so forth,
SU	Subscriber Unit: a radio that can transmit and receive to one point. See also HSU
TBS	Transportation Base Station. Similar to an HBS or BS, but used with high-speed transportation applications.
TMU	Transportation Mobile Unit. Similar to an SU
Track Side	Items or subject matter that relates to the environment ***not*** on or inside the train. It is not limited to precisely next to the track. Also called “wayside”
Train Side	Items or subject matter that relates to the environment on or inside the train itself. Also called “On-board”
TSN	Time Sensitive Network
Uplink	Data traffic from an HSU to an HBS, or Data traffic from an RT-B to an RT-A
Wayside	Items or subject matter that relates to the environment ***not*** on or inside the train. It is not limited to precisely next to the track. Also called “Track Side”
WISPA	Wireless Internet Service Provider Association. An organization that manages registration of wireless devices that operate close to TDWR facilities run by the FAA.
VRRP	Virtual Router Redundancy Protocol - a networking protocol that provides for automatic assignment of available IP routers to participating hosts.

FOR REGULATORY REVIEW

Appendix C: Revision History

Table C-1: Revision History

Date	Description
June 21, 2015 Rev. 0.1	Rel: 4.1.80 Initial release
Aug 10, 2016 Rev. 0.2	Rel: 4.2.30 Extensive editing, updated for release
May, 2017 Rev. 0.3	Rel: 4.2.45 Extensive editing, updated for release
Nov, 2017 Rev. 0.4	Updated for regulatory compliance
Aug, 2018 Rev. 0.5	Updated to separate Config, Install, and Network Guideline docs, and for better figs, and various comments
May, 2019 Rev. 0.6	Rel: 4.5.20 Includes L3 descriptions, and more detail about the GSU.
Jan, 2020 Rev. 0.7	Rel: 4.5.25 • EACS • Updated MIB Reference guide • Plugin description for WINManage • Wall installation for LPU removed
Mar 1, 2020 Rev. 0.8	Updates to approved antennas
Mar 22, 2020 Rev. 0.9	Updates to approved antennas (mainly for IC) Updates to regulatory warnings and comments
DQ0266070/A.00	Re-alignment for Cat.No.
DQ0266070/A.01	Regulatory updates, additional antennas

FOR REGULATORY REVIEW

Regulatory Compliance

General Note

This system has achieved Type Approval in various countries around the world. This means that the system has been tested against various local technical regulations and found to comply. The frequency bands in which the system operates may be “unlicensed” and in these bands, the system can be used provided it does not cause interference.

FCC/ISED - Compliance

This equipment has been tested and found to comply with the limits for a Class B digital device, pursuant to Part 15 of the FCC Rules. These limits are designed to provide reasonable protection against harmful interference in a residential installation. This equipment generates, uses and can radiate radio frequency energy and, if not installed and used in accordance with the instructions, may cause harmful interference to radio communications. However, there is no guarantee that interference will not occur in a particular installation. If this equipment does cause harmful interference to radio or television reception, which can be determined by turning the equipment off and on, the user is encouraged to try to correct the interference by one or more of the following measures:

- Reorient or relocate the receiving antenna.
- Increase the separation between the equipment and receiver.
- Connect the equipment into an outlet on a circuit different from that to which the receiver is connected.

Consult the dealer or an experienced radio/TV technician for help.

Changes or modifications to this equipment not expressly approved by the party responsible for compliance could void the user's authority to operate the equipment.

RF Exposure

It is recommended to keep a safe distance of 78 cm from the radiating antenna when operating in the US and 79 cm when operating in Canada.

Exposition RF

Il est recommandé de garder une distance de sécurité de 78 cm de l'antenne rayonnante lorsqu'elle fonctionne aux États?Unis et de 79 cm lorsqu'elle fonctionne au Canada

FOR REGULATORY REVIEW

Warning	Radio devices using external antennas operating in the 5150-5250 MHz band must comply with the EIRP limits as specified in the Certified Antennas appendix as per Base Station or Train installation. Appareils radio utilisant des antennes externes fonctionnant bande 5150-5250 MHz sera conforme aux limites de la pire indiquees dans le l'annexe Antennes certifiees selon l'installation interieure ou dans un vehicule

Warning	Radio devices using external antennas operating in the 5470-5725 MHz bands must comply with the EIRP limits as specified in the Certified Antennas appendix Appareils radio utilisant des antennes externes fonctionnant dans les bande 5470-5725 MHz seront conformes ala EIRP limites iniquees à l'annexe Antennes Certifiées

Warning	Radio devices using external antennas operating in the 5725-5850 MHz band must comply with the EIRP limits as specified in the Certified Antennas appendix for point-to-point and point-to-multipoint operation. Appareils radio utilisant des antennes externes fonctionnant dans la bande 5725-5850 MHz seront conformes ala EIRP limites iniquees à l'annexe Antennes Certifiées pour un fonctionnement point a point et non point a point.

Warning	Radio devices shall be so installed to have worst-case tilt angle to remain compliant with the EIRP elevation mask requirement set forth in RSS-247 Section 6.2.2(3). Appareils de radio doivent etre installes de maniere a avoir l’angle d’inclinaison du pire poir rester conforme a la EIRP exigence de masque d’elevation selon la RSS-247 Sec tion 6.2.2(3)

FOR REGULATORY REVIEW

Caution

Installers are advised to consider high-power radars allocation as priority users of the band 5470-5725 MHz and that these radars could cause interference and/or damage to the radio devices.

Les installateurs sont invites a envisager de radars a haute puissance allocation que les utilisateurs prioritaires des bande 5470-5725 MHz et que ces radars pourraient causer interferences et /ou endommager les appareils de radio.

Warning

It is the responsibility of the installer to ensure that when using the outdoor antenna kits in the United States (or where FCC rules apply), only those antennas certified with the product are used. The use of any antenna other than those certified with the product is expressly forbidden by FCC rules 47 CFR part 15.204.

Warning

It is the responsibility of the installer to ensure that when configuring the radio in the United States (or where FCC rules apply), the Tx power is set according to the values for which the product is certified. The use of Tx power values other than those, for which the product is certified, is expressly forbidden by FCC rules 47 CFR part 15.204.

Caution

Outdoor units and antennas should be installed ONLY by experienced installation professionals who are familiar with local building and safety codes and, wherever applicable, are licensed by the appropriate government regulatory authorities. Failure to do so may void the product warranty and may expose the end user or the service provider to legal and financial liabilities. Resellers or distributors of this equipment are not liable for injury, damage or violation of regulations associated with the installation of outdoor units or antennas. The installer should configure the output power level of antennas according to country regulations and antenna type.

Warning

Radio devices subject to RSS-247 issue 2 shall not be capable of transmitting in the band 5600-5650 MHz.

Dispositifs radio soumis a la delivrance RSS-247 2 ne sont pas capables de transmettre dans la bande 5600-5650 MHz.

Indoor Units comply with part 15 of the FCC rules. Operation is subject to the following two conditions:

FOR REGULATORY REVIEW

Warning

The radio devices in this manual have been approved by Industry Canada to operate with the antenna types listed in the Certified Antennas appendix with the maximum permissible gain and required antenna impedance for each antenna type indicated.
Antenna types not included in this list, having a gain greater than the maximum gain indicate for that type, are strictly prohibited for use with this device.

Les appareils de radio dans ce manuel ont ete approuves par Industrie Canada pour fonctionner avec les types d'antenne enumeries à l'annexe Antennes Certifiées avec le gain maximal admissible et l'impedance d'antenne requise pour chaque type d'antenne indique.
Types d'antennes non inclus dans cette liste, ayant un gain superieur au gain maximum indique pour ce type, sont strictement interdics pur une utilisation avec cet appareil.

Warning

- Where Outdoor units are configurable by software to Tx power values other than those for which the product is certified, it is the responsibility of the Professional Installer to restrict the Tx power to the certified limits.
- This product was tested with special accessories - indoor unit (IDU or PoE), FTP CAT-5e shielded cable with sealing gasket, 10 AWG grounding cable - which must be used with the unit to insure compliance.

(1) These devices may not cause harmful interference.

(2) These devices must accept any interference received, including interference that may cause undesired operation.

Canadian Emission Requirements for Indoor Units

This Class B digital apparatus complies with Canadian ICES-003.

Cet appareil numẻrique de la classe B est conforme ả la norme NMB-003 du Canada.

China MII

Operation of the equipment is only allowed under China MII 5.8GHz band regulation configuration with EIRP limited to 33 dBm (2 Watt).

India WPC

Operation of the equipment is only allowed under India WPC GSR-38 for 5.8GHz band regulation configuration.

Unregulated

In countries where the radio is not regulated the equipment can be operated in any regulation configuration, best results will be obtained using Universal regulation configuration.

FOR REGULATORY REVIEW

Safety Practices

Applicable requirements of National Electrical Code (NEC), NFPA 70; and the National Electrical Safety Code, ANSI/IEEE C2, must be considered during installation.

NOTES:

1. A Primary Protector is not required to protect the exposed wiring as long as the exposed wiring length is limited to less than or equal to 140 feet, and instructions are provided to avoid exposure of wiring to accidental contact with lightning and power conductors in accordance with NEC Sections 725-54 (c) and 800-30.

In all other cases, an appropriate Listed Primary Protector must be provided. Refer to Articles 800 and 810 of the NEC for details.

2. For protection of ODU against direct lightning strikes, appropriate requirements of NFPA 780 should be considered in addition to NEC.

3. For Canada, appropriate requirements of the CEC 22.1 including Section 60 and additional requirements of CAN/CSA-B72 must be considered as applicable.

FOR REGULATORY REVIEW

Transportation FiberinMotion

Installation Guide

Notice

This handbook contains information that is proprietary to RADWIN Ltd (RADWIN hereafter). No part of this publication may be reproduced in any form whatsoever without prior written approval by RADWIN.

Right, title and interest, all information, copyrights, patents, know-how, trade secrets and other intellectual property or other proprietary rights relating to this handbook and to the RADWIN products and any software components contained therein are proprietary products of RADWIN protected under international copyright law and shall be and remain solely with RADWIN.

The RADWIN name is a registered trademark of RADWIN. No right, license, or interest to such trademark is granted hereunder, and you agree that no such right, license, or interest shall be asserted by you with respect to such trademark.

You shall not copy, reverse compile or reverse assemble all or any portion of the Installation Guide or any other RADWIN documentation or products. You are prohibited from, and shall not, directly or indirectly, develop, market, distribute, license, or sell any product that supports substantially similar functionality based or derived in any way from RADWIN products.Your undertaking in this paragraph shall survive the termination of this Agreement.

This Agreement is effective upon your opening of a RADWIN product package and shall continue until terminated. RADWIN may terminate this Agreement upon the breach by you of any term thereof. Upon such termination by RADWIN, you agree to return to RADWIN any RADWIN products and documentation and all copies and portions thereof.

For further information contact RADWIN at one of the addresses under **Worldwide Contacts** below or contact your local distributor.

Disclaimer

The parameters quoted in this document must be specifically confirmed in writing before they become applicable to any particular order or contract. RADWIN reserves the right to make alterations or amendments to the detail specification at its discretion. The publication of information in this document does not imply freedom from patent or other rights of RADWIN, or others.

Trademarks

WinLink 1000, RADWIN 2000, **RADWIN 5000**, **RADWIN 6000**, **RADWIN 600** and **FiberinMotion** are trademarks of RADWIN Ltd.

Windows 2000, XP Pro, Vista, Windows 7 and **Internet Explorer** are trademarks of Microsoft Inc.

Mozilla and **Firefox** are trademarks of the Mozilla Foundation.

FOR REGULATORY REVIEW

Other product names are trademarks of their respective manufacturers.

FOR REGULATORY REVIEW

RADWIN

FOR REGULATORY REVIEW