Installation and Operation Manual

AirMux-104/ WinLink 582

Point-to-Point Wireless TDM/IP Multiplexer

AirMux-104/ WinLink 582

Point-to-Point Wireless TDM/IP Multiplexer

Installation and Operation Manual

Notice

This manual contains information that is proprietary to RAD Data Communications Ltd. ("RAD") and RADWIN Ltd. (“RADWIN”). No part of this publication may be reproduced in any form whatsoever without prior written approval by RAD Data Communications and RADWIN.

Right, title and interest, all information, copyrights, patents, know-how, trade secrets and other intellectual property or other proprietary rights relating to this manual and to the AirMux-104/WinLink 582 and any software components contained therein are proprietary products of RAD and RADWIN protected under international copyright law and shall be and remain solely with RAD and RADWIN.

AirMux-104/WinLink 582 is a registered trademark of RAD and RADWIN. No right, license, or interest to such trademark is granted hereunder, and you agree that no such right, license, or interest shall be asserted by you with respect to such trademark.

You shall not copy, reverse compile or reverse assemble all or any portion of the Manual or the AirMux-104/WinLink 582. You are prohibited from, and shall not, directly or indirectly, develop, market, distribute, license, or sell any product that supports substantially similar functionality as the AirMux-104/WinLink 582, based on or derived in any way from the AirMux-104/WinLink 582. Your undertaking in this paragraph shall survive the termination of this Agreement.

This Agreement is effective upon your opening of the AirMux-104/WinLink 582 package and shall continue until terminated. RAD and RADWIN may terminate this Agreement upon the breach by you of any term hereof. Upon such termination by RAD, you agree to return to RAD and RADWIN the AirMux-104/WinLink 582 and all copies and portions thereof.

For further information contact RAD at the address below or contact your local distributor.

RAD Data Communications Ltd.	**RADWIN Ltd.**
24 Raoul Wallenberg St. Tel Aviv 69719 Israel Tel: 972-3-6458181 Fax: 972-3-6498250 E-mail: rad@rad.co.il	34 Habarzel St, Tel-Aviv 69710, Israel E-mail: radwin@radwin.com

© 2002–2003 RAD Data Communications Ltd., RADWIN Ltd. Publication No. 193-200-xx/03

General Safety Instructions

The following instructions serve as a general guide for the safe installation and operation of telecommunications products. Additional instructions, if applicable, are included inside the manual.

Safety Symbols

This symbol may appear on the equipment or in the text. It indicates potential safety hazards regarding product operation or maintenance to operator or service personnel.

Danger of electric shock! Avoid any contact with the marked surface while the product is energized or connected to outdoor telecommunication lines.

.

Protective earth: the marked lug or terminal should be connected to the building protective earth bus.

Some products may be equipped with a laser diode. In such cases, a label with the laser class and other warnings as applicable will be attached near the optical transmitter. The laser warning symbol may be also attached. Please observe the following precautions:

- **Before turning on the equipment, make sure that the fiber optic cable is intact and is connected to the transmitter.**
- **Do not attempt to adjust the laser drive current.**
- **Do not use broken or unterminated fiber-optic cables/connectors or look straight at the laser beam.**
- **The use of optical devices with the equipment will increase eye hazard.**
- **Use of controls, adjustments or performing procedures other than those specified herein, may result in hazardous radiation exposure.**

ATTENTION: The laser beam may be invisible!

Always observe standard safety precautions during installation, operation and maintenance of this product. Only qualified and authorized service personnel should carry out adjustment, maintenance or repairs to this product. No installation, adjustment, maintenance or repairs should be performed by either the operator or the user.

Handling Energized Products

General Safety Practices

Do not touch or tamper with the power supply when the power cord is connected. Line voltages may be present inside certain products even when the power switch (if installed) is in the OFF position or a fuse is blown. For DC-powered products, although the voltages levels are usually not hazardous, energy hazards may still exist.

Before working on equipment connected to power lines or telecommunication lines, remove jewelry or any other metallic object that may come into contact with energized parts.

Unless otherwise specified, all products are intended to be grounded during normal use. Grounding is provided by connecting the mains plug to a wall socket with a protective earth terminal. If an earth lug is provided on the product, it should be connected to the protective earth at all times, by a wire with a diameter of 18 AWG or wider. Rack-mounted equipment should be mounted only in earthed racks and cabinets.

Always make the ground connection first and disconnect it last. Do not connect telecommunication cables to ungrounded equipment. Make sure that all other cables are disconnected before disconnecting the ground.

Connection of AC Mains

Make sure that the electrical installation complies with local codes.

Always connect the AC plug to a wall socket with a protective ground.

The maximum permissible current capability of the branch distribution circuit that supplies power to the product is 16A. The circuit breaker in the building installation should have high breaking capacity and must operate at short-circuit current exceeding 35A.

Always connect the power cord first to the equipment and then to the wall socket. If a power switch is provided in the equipment, set it to the OFF position. If the power cord cannot be readily disconnected in case of emergency, make sure that a readily accessible circuit breaker or emergency switch is installed in the building installation.

Connection of DC Mains

Unless otherwise specified in the manual, the DC input to the equipment is floating in reference to the ground. Any single pole can be externally grounded.

Due to the high current capability of DC mains systems, care should be taken when connecting the DC supply to avoid short-circuits and fire hazards.

DC units should be installed in a restricted access area, i.e. an area where access is authorized only to qualified service and maintenance personnel.

Make sure that the DC supply is electrically isolated from any AC source and that the installation complies with the local codes.

The maximum permissible current capability of the branch distribution circuit that supplies power to the product is 16A. The circuit breaker in the building installation should have high breaking capacity and must operate at short-circuit current exceeding 35A.

Before connecting the DC supply wires, ensure that power is removed form the DC circuit. Locate the circuit breaker of the panel board that services the equipment and switch it to the OFF position. When connecting the DC supply wires, first connect the ground wire to the corresponding terminal, then the positive pole and last the negative pole. Switch the circuit breaker back to the ON position.

A readily accessible disconnect device that is suitably rated and approved should be incorporated in the building installation.

Installing the Radio Terminals (RTs)

The following safety measures apply when installing the radio terminals and masts.

- Mast / pole / towers should comply with local standards such as BS6651.
- Only trained professional installers should be used when installing or dismantling radio terminals and masts. The installer is responsible for meeting all building and safety codes.
- Before installing a terminal, make sure it is disconnected from power.
- A safety belt and climbing harness must be used when installing the radio terminals on a mast or tower.
- Masts of height 3 meters or more must be guyed according to required industry standards and be lightning protected.
- If a radio terminal is to be mounted at a height of more than 4 meters above the roof, it is recommended that a climbable tower be installed to give access to the equipment and to prevent antenna movement during strong winds.
- When installing equipment, beware of overhead high-voltage power lines. Never install a mast under power lines.
- The mast structure must be grounded.
- Do not stand in front of live radio terminal.
- The installer should configure the output power level of antennas, according to country regulations and per antenna type.
- The antenna used for this transmitter must be installed to provide a separation distance of at least 20 cm from all persons and must not be co-located or operating in conjunction with any other antenna or transmitter.

Warning

Outdoor units and antennas should be installed ONLY by experienced installation professionals who are familiar with local building and safety codes and, wherever applicable, are licensed by the appropriate government regulatory authorities. Failure to do so may void the AirMux-104/WinLink 582 warranty and may expose the end user or the service provider to legal and financial liabilities. RAD, RADWIN and their resellers or distributors are not liable for injury, damage or violation of regulations associated with the installation of outdoor units or antennas.

Protection Against Lightning Activity

Observe the following safety measures to protect personnel and equipment:

- All outdoor equipment must be attached to a properly grounded structure, and installed masts must be grounded, in order to provide protection against lightening, surges and static buildup. In addition, mast over 3 meters should have lightning protection rod. Failure to do so creates a safety risk and will void the equipment warranty.
- Do not work on the system or connect or disconnect the cables prior to, or during, electrical storm activity.
- In case of an electrical storm, do not touch any outdoor electrical equipment and get off the roof as quickly as possible.

Connection of Data and Telecommunications Cables

Data and telecommunication interfaces are classified according to their safety status.

The following table lists the status of several standard interfaces. If the status of a given port differs from the standard one, a notice will be given in the manual.

Ports	Safety Status	
V.11, V.28, V.35, V.36, RS-530, X.21, 10 BaseT, 100 BaseT, Unbalanced E1, E2, E3, STM, DS-2, DS-3, S-Interface ISDN, Analog voice E&M	SELV	Safety Extra Low Voltage: Ports which do not present a safety hazard. Usually up to 30 VAC or 60 VDC.
xDSL (without feeding voltage), Balanced E1, T1, Sub E1/T1	TNV-1	Telecommunication Network Voltage-1: Ports whose normal operating voltage is within the limits of SELV, on which overvoltages from telecommunications networks are possible.
FXS (Foreign Exchange Subscriber)	TNV-2	Telecommunication Network Voltage-2: Ports whose normal operating voltage exceeds the limits of SELV (usually up to 120 VDC or telephone ringing voltages), on which overvoltages from telecommunication networks are not possible. These ports are not permitted to be directly connected to external telephone and data lines.
FXO (Foreign Exchange Office), xDSL (with feeding voltage), U-Interface ISDN	TNV-3	Telecommunication Network Voltage-3: Ports whose normal operating voltage exceeds the limits of SELV (usually up to 120 VDC or telephone ringing voltages), on which overvoltages from telecommunication networks are possible.

Note *The signals between the RT and RTCB are TNV-1.*

Always connect a given port to a port of the same safety status. If in doubt, seek the assistance of a qualified safety engineer.

Always make sure that the equipment is grounded before connecting telecommunication cables. Do not disconnect the ground connection before disconnecting all telecommunications cables.

Some SELV and non-SELV circuits use the same connectors. Use caution when connecting cables. Extra caution should be exercised during thunderstorms.

When using shielded or coaxial cables, verify that there is a good ground connection at both ends. The earthing and bonding of the ground connections should comply with the local codes.

The telecommunication wiring in the building may be damaged or present a fire hazard in case of contact between exposed external wires and the AC power lines. In order to reduce the risk, there are restrictions on the diameter of wires in the telecom cables, between the equipment and the mating connectors.

Caution To reduce the risk of fire, use only No. 26 AWG or larger telecommunication line cords.

Attention Pour réduire les risques s'incendie, utiliser seulement des conducteurs de télécommunications 26 AWG ou de section supérieure.

Some ports are suitable for connection to intra-building or non-exposed wiring or cabling only. In such cases, a notice will be given in the installation instructions.

Do not attempt to tamper with any carrier-provided equipment or connection hardware.

Electromagnetic Compatibility (EMC)

The equipment is designed and approved to comply with the electromagnetic regulations of major regulatory bodies. The following instructions may enhance the performance of the equipment and will provide better protection against excessive emission and better immunity against disturbances.

A good earth connection is essential. When installing the equipment in a rack, make sure to remove all traces of paint from the mounting points. Use suitable lock-washers and torque. If an external grounding lug is provided, connect it to the earth bus using braided wire as short as possible.

The equipment is designed to comply with EMC requirements when connecting it with unshielded twisted pair (UTP) cables. However, the use of shielded wires is always recommended, especially for high-rate data. In some cases, when unshielded wires are used, ferrite cores should be installed on certain cables. In such cases, special instructions are provided in the manual.

Disconnect all wires which are not in permanent use, such as cables used for one-time configuration.

The compliance of the equipment with the regulations for conducted emission on the data lines is dependent on the cable quality. The emission is tested for UTP with 80 dB longitudinal conversion loss (LCL).

Unless otherwise specified or described in the manual, TNV-1 and TNV-3 ports provide secondary protection against surges on the data lines. Primary protectors should be provided in the building installation.

The equipment is designed to provide adequate protection against electro-static discharge (ESD). However, it is good working practice to use caution when connecting cables terminated with plastic connectors (without a grounded metal hood, such as flat cables) to sensitive data lines. Before connecting such cables, discharge yourself by touching earth ground or wear an ESD preventive wrist strap.

FCC-15 User Information

This equipment has been tested and found to comply with the limits of the Class A digital device, pursuant to Part 15 of the FCC rules. These limits are designed to provide reasonable protection against harmful interference when the equipment is operated in a commercial environment. This equipment generates, uses and can radiate radio frequency energy and, if not installed and used in accordance with the Installation and Operation manual, may cause harmful interference to the radio communications. Operation of this equipment in a residential area is likely to cause harmful interference in which case the user will be required to correct the interference at his own expense.

Changes or modifications to this equipment not expressly approved by the party responsible for compliance (RAD) could void the user's authority to operate the equipment.

Warning

It is the responsibility of the installer to ensure that when using the outdoor antenna kits in the United States (or where FCC rules apply), only those antennas certified with the product are used. The use of any antenna other than those certified with the product is expressly forbidden in accordance to FCC rules CFR47 part 15.204.

Canadian Emission Requirements for the RTCB

This Class A digital apparatus meets all the requirements of the Canadian Interference-Causing Equipment Regulation.

Cet appareil numérique de la classe A respecte toutes les exigences du Règlement sur le matériel brouilleur du Canada.

Warning per EN 55022 (CISPR-22) for the RTCB

Warning

This is a class A product. In a domestic environment, this product may cause radio interference, in which case the user will be required to take adequate measures.

Avertissement

Cet appareil est un appareil de Classe A. Dans un environnement résidentiel, cet appareil peut provoquer des brouillages radioélectriques. Dans ces cas, il peut être demandé à l'utilisateur de prendre les mesures appropriées.

Achtung

Dieses ist ein Gerät der Funkstörgrenzwertklasse A. In Wohnbereichen können bei Betrieb dieses Gerätes Rundfunkströrungen auftreten, in welchen Fällen der Benutzer für entsprechende Gegenmaßnahmen verantwortlich ist.

CE Statement according to Directive 1999/5/EC

Hereby, RAD Data Communications Ltd. and RADWIN Ltd. declare that the AirMux-104/WinLink 582 system is in compliance with the essential requirements and other relevant provisions of Directive 1995/5/EC.

The alert sign on the AirMux-104/WinLink 582 indicates that the frequency band that is being used by the equipment is not harmonized within the EU and/or the potential restrictions on its use are applicable in one or more EU member states.

Quick Start Guide

Installation of AirMux-104 should be carried out only by an experienced technician. If you are familiar with AirMux-104, use this guide to prepare the units for operation.

1. Installing AirMux-104 Units

Performing Initial Setup

➤ **To perform initial setup:**

1. Install and run the AirMux-104 management software on the network management station.
2. Prepare the 2m RT-to-RTCB configuration cable for initial setup.
3. Connect the first RTCB to its RT using the 2m configuration cable.
4. Power up the first RTCB.
5. Connect management station to the first RTCB.
6. Perform initial configuration of AirMux-104 and download the new parameters to the first unit.
7. Disconnect the configuration cable from the first RTSB and its RT.
8. Connect the second RTCB to its RT using the 2m configuration cable.
9. Connect the network management station to the second RTCB.
10. Download the new parameters to the second AirMux-104.

Performing Outdoor Installation

➤ **To install the RT:**

1. Route the RT cable from the RT location (on the roof) to the RTCB location (inside the building).
2. Attach the RT unit to the mast, using the two strap clamps.
3. Use the RT cable to connect the RTCB to the RT.
4. Secure the RT and ground cables to the mast or brackets using provided UV-rated cable ties.
5. Repeat the procedure at the remote site.

➤ **To align the RTs:**

1. Connect power to the RTCBs.
2. Turn the local RT in the direction of the remote RT.
3. At the remote site, align the RT to face the local RT. (Align visually or by using a map and a compass). Use the RSS/SNR, LINK and STATUS LEDs at the base of the RT for the link quality indication:
   - RTs are not aligned:
     - Triple RSS/SNR LED is blinking
     - LINK LED is OFF
     - STATUS LED is blinking slowly.
   - RTs are aligned:
     - Triple RSS/SNR LED is blinking or lit steadily
     - LINK LEDs is lit steadily
     - STATUS LED is blinking rapidly.
4. Repeat steps 3 to 4 for the local RT to complete the installation procedure.
5. Make sure that the management station is properly connected to the local RTCB, and the AirMux Manager application is running.
6. In the Main menu, click **Monitor**.
7. Verify the radio signal strength (RSS) and sound-to-noise ratio (SNR) in the Main menu.
   - RSS is better than -88 dBm
   - SNR must be at least 9 dB.

Note *Try achieving the best possible RSS and SNR values.*

8. View these parameters for about 15 min. to verify stability. After achieving the best RSS and SNR levels, permanently attach the remote RTs to the mast/wall.

Warning

Do not stand in front of live radio terminal.

Performing Indoor Installation

➤ **To connect user equipment to the RTCB:**

1. Connect user mux or PBX to the RTCB rear panel RJ-45 port designated E1.
2. Connect user hub/router or any other compatible device to the RTCB rear panel RJ-45 port designated 10/100 LAN.

2. Operating AirMux-104

AirMux-104 requires no operator attention once installed, with the exception of occasional monitoring of front panel indicators and statistics data. Intervention is only required when AirMux-104 must be configured to its operational requirements, or diagnostic tests are performed.

Normal Indications

Upon turning on AirMux-104, the PWR LED in the front panel lights to indicate that AirMux-104 is on. The table below shows the correct status of the indicators a few seconds after power-up.

Indicator	Status
PWR	ON
RTCB	ON

Contents

Chapter 1. Introduction

1.1 Overview 1-1
Application 1-1
Features 1-1
1.2 Physical Description 1-3
1.3 Technical Specifications 1-4

Chapter 2. Initial Setup

2.1 Introduction 2-1
2.2 AirMux-104 System 2-2
2.3 Installing AirMux-104 Management Software 2-2
2.4 Performing Initial Setup of AirMux-104 2-2
Configuring General Parameters 2-4
Configuring Service Parameters 2-6
Downloading Configuration Parameters 2-8

Chapter 3. Installation and Setup

3.1 Site Requirements and Prerequisites 3-1
3.2 Package Contents 3-1
3.3 Installation and Setup 3-2
Outdoor Installation 3-3
Indoor Installation 3-8

Chapter 4. Operation

4.1 Front Panel Indicators 4-1
4.2 Operating AirMux-104 4-2
Turning On AirMux-104 4-2
Normal Indications 4-2
Turning Off AirMux-104 4-2
4.3 Managing AirMux-104 4-3
Changing Configuration Parameters 4-4
Displaying AirMux-104 Inventory 4-7

Chapter 5. Diagnostics and Troubleshooting

5.1 Error Detection 5-1
Power-Up Self-Test 5-1
Alarms 5-1
5.2 Collecting Statistics 5-3
5.3 Running Diagnostic Loopbacks 5-4
Local External Loopback 5-5
Remote Internal Loopback 5-5
Remote External Loopback 5-6
Local Internal Loopback 5-6

Appendix A. Wiring Specifications

Appendix B. Mast and Wall Installation

List of Figures

1-1. Typical Application 1-1
1-2. AirMux-104 Unit 1-3

2-1. AirMux Manager Main Menu 2-3
2-2. Confirmation Message for Communication Preference Change 2-4
2-3. Communication Preferences Dialog Box 2-4
2-4. General Parameters Dialog Box 2-5
2-5. Service Parameters Dialog Box 2-6
2-6. IP Parameters 2-8
2-7. Download Data Dialog Box 2-9
2-8. Installation Completed Successfully Message 2-9

3-1. Typical Installation (for Reference and Illustration only) 3-2
3-2. Rear Panel 3-3
3-3. RT LEDs 3-4

4-1. Front Panel 4-1
4-2. Main Menu, Wireless Link is Active 4-3
4-3. Communication Preferences Dialog Box 4-5
4-4. Configure Dialog Box 4-6
4-5. AirMux-104 Inventory 4-7

5-1. AirMux-104 Alarms and Status Indications 5-2
5-2. Logger Options Dialog Box 5-3
5-3. Monitor Options Dialog Box 5-4
5-4. Loopbacks Dialog Box 5-4
5-5. Local External Loopback 5-5
5-6. Remote Internal Loopback 5-5
5-7. Remote External Loopback 5-6
5-8. Local Internal Loopback 5-6

List of Tables

2-1. Correlation between the Number of Assigned Timeslots and Remaining Ethernet Bandwidth 2-7

3-1. RSS/SNR Triple LED Indication (RSS Mode) 3-5
3-2. RSS/SNR Triple LED Indication (SNR Mode) 3-6

4-1. RTCB LEDs 4-1
4-2. RT LEDs 4-2
4-3. AirMux-104 Indicator Status 4-2

5-1. AirMux-104 Alarms and Information Messages 5-1

Chapter 1
Introduction

1.1 Overview

AirMux-104 is a wireless point-to-point TDM/IP multiplexer operating at 5.725–5.850 GHz license-exempt bands. AirMux-104 combines G.704/G.703 E1 TDM and Ethernet traffic over 2.6 Mbps full duplex wireless link at the distances of up to 16 km (10 miles).

The use of the spread spectrum technology enables AirMux-104 a maximum utilization of the available license-free frequency spectrum for both circuit and packet-switched traffic.

Application

Figure 1-1 illustrates a typical point-to-point application of two AirMux-104 units.

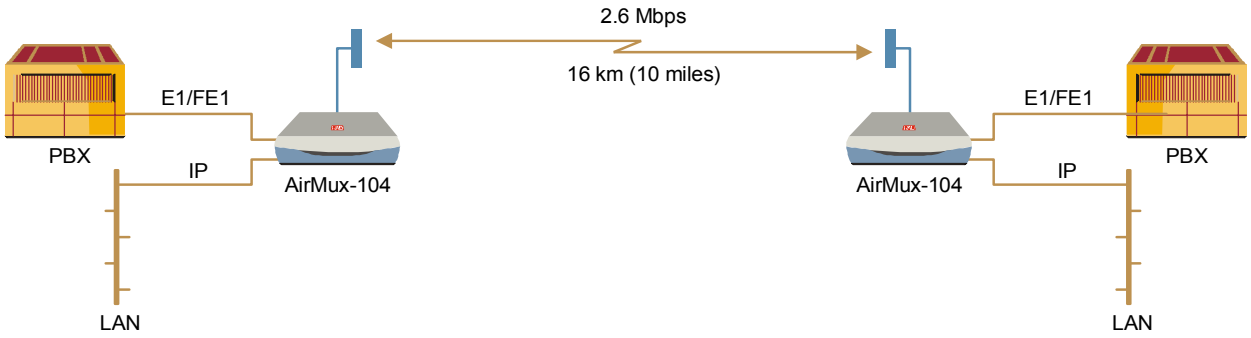

Figure 1-1. Typical Application

Features

Wireless Link

AirMux-104 delivers full duplex 2.6 Mbps channel for Ethernet traffic and E1 streams. AirMux-104 operates as line of sight radio system supporting the following frequency bands:

- ANSI Unlicensed National Information Infrastructure (UNII)
- ISM.

AirMux-104 can be configured to operate over several frequency channels with carrier step resolution of 10 MHz. The number of the frequency channels depends on the selected operating band.

AirMux-104 uses Direct Sequence Spread Spectrum technology combined with powerful forward error correction to ensure high reliability and security over license exempt 5.725–5.850 GHz frequency. AirMux-104 operation complies with the FCC 15.401&15.407 requirements.
AirMux-104 employs Time Division Duplex (TDD) transmission. This technology simplifies the installation and configuration procedure, there is no need to plan and to allocate separate channels for the uplink and downlink data streams. Operation over 5.725–5.850 GHz bands is not affected by harsh weather conditions, such as fog, heavy rain etc.

LAN Interface

AirMux-104 LAN port provides 10/100BaseT interface with autonegotiation and transparent VLAN support. Traffic handling is provided by MAC-level self-learning bridge.

TDM Interface

AirMux-104 TDM interface accepts E1 traffic, providing framed/unframed operation, CRC-4 support and flexible timeslot allocation (in the framed mode only).

Management

AirMux-104 has full local and remote management capabilities. User-friendly SNMP-based management tool provides full end-to-end configuration and performance monitoring capabilities.

Diagnostics and Performance Monitoring

AirMux-104 supports activation local and remote loopbacks on E1 links.

AirMux-104 constantly monitors the data transmission process, evaluates received signal strength, signal-to-noise ratio and bit error rate. It also monitors received traffic and frame rate (FPS) for local and remote units.

1.2 Physical Description

AirMux-104 system consists of a radio terminal (RT) and an indoor unit (RTCB). *Figure 1-2* illustrates an AirMux-104 unit assembly.

Figure 1-2. AirMux-104 Unit

The front panel of the indoor unit (RTCB) includes five LEDs, which display the status of E1, wireless link, self-test results, RT-to-RTCB link, and power status. For detailed description of the front panel, see *Chapter 4*.

The rear panel of the indoor unit (RTCB) includes the power, user (LAN and E1), and radio terminal connectors. The AirMux-104 rear panel is described in greater detail in *Chapter 3*.

1.3 Technical Specifications

Wireless Link	*Technology*	Spread spectrum
	Frequency Band	5.725–5.850 GHz: • ANSI Unlicensed National Information Infrastructure (UNNII) • ISM
	Duplexing Method	Time Division Duplex (TDD)
	Capacity	2.6 Mbps, full duplex
	Modulation	QPSK
	Channel Bandwidth Resolution	10 MHz
	Transmitter Power	16.7 dBm max
	Receiver Sensitivity	-90 dBm at BER 1E-8
	Antenna Gain	20 dBi
	Antenna Beam	±9° horizontal and vertical
	RT Installation Method	Mast or wall mounting
LAN Interface	*PHY IF*	10/100BaseT, auto-sensing
	Framing/Coding	IEEE 802.3/U
	Bridging	Self-learning, up to 4000 MAC addresses
	Line Impedance	100Ω
	VLAN Support	Transparent
	Data Rate	2 Mbps max
	Connector	RJ-45
E1 Interface	*Framing*	G.703, G.704 with or without CRC
	Data Rate	N x 64 kbps (n = 1, 2, ..., 32), user-selectable
	Timing	Plesiochronous
	Connector	RJ-45
Indicators	*PWR (green)*	Power status
	RT (green/red)	RT-to-RTCB link status
	RTCB (green)	RTCB self-test results
	AIR I/F (green/red)	Wireless link status
	Service (green/red)	E1 signal status

Power	*Source*	100–240 VAC via external AC/DC converter
	Power Received by the RT	-48 VDC
	Power Consumption	25W max (RT and RTCB)
	Connector	4-pin
Physical	***Outdoor Unit (RT)***	
	Height	305 mm / 12 in
	Width	305 mm / 12 in
	Depth	72 mm / 2.8 in
	Weight	3.3 kg / 7.2 lb
	Indoor Unit (RTCB)	
	Height	44 mm / 1.7 in (1U)
	Width	237 mm / 9.3 in
	Depth	170 mm / 6.7 in
	Weight	0.58 kg / 1.4 lb
Environment	***Radio Terminal***	
	Enclosure	All-weather case
	Temperature	-45–60°C/-49–140°F
	Indoor Unit	
	Temperature	-5–45°C/23–113°F
	Humidity	Up to 90%, non-condensing

Chapter 2

Initial Setup

This chapter describes configuration procedures, which must be performed prior to the physical installation of the local and remote AirMux-104 units.

2.1 Introduction

Installation of the AirMux-104 system includes the following steps:

1. Installing management program on the network management station.
2. Performing preliminary configuration of the AirMux-104 units.
   - Selecting communication method
     - Local (direct connection via cross cable)
     - Network (connection via network to a specified IP address)
   - Configuring general parameters
     - Selecting product type (operation band)
     - Choosing operation channel within selected operation band
     - Assigning name to the radio link
   - Configuring service parameters
     - Selecting E1 service type (framed or unframed)
     - Enabling or disabling CRC-4 bits generation (for the framed E1 only)
     - Mapping timeslots (for the framed E1 only)
     - Selecting IP address, subnet mask, default gateway and trap destination.
3. Installing RT cable.
4. Installing Radio Terminals (RTs) and Radio Terminal Connection Boxes (RTCBs) at the local and remote sites.
5. Connecting RTs and RTCBs and powering them up.
6. Aligning local and remote RTs.
7. Connecting user equipment to the local and remote RTCBs.

This chapter explains step 1 and step 2 of the AirMux-104 installation procedure. Refer to *Chapter 3* for the instructions on completing the AirMux-104 installation.

2.2 AirMux-104 System

AirMux-104 system comprises the following units:

- **Radio Terminal (RT)**: An enclosed aluminum frame with a front sealed plastic cover, containing an integrated transceiver with an antenna, RF module, modem and standard interfaces. The RT stores all configuration parameters of the AirMux-104 system.

  RT includes 16-pin KRONE-type connector which receives -48 VDC, E1 and Ethernet traffic from the indoor unit (RTCB).

  The RT is attached to a mast or a wall using a special mounting kit. The RT mounting kit is supplied with the unit.
- **Radio Terminal Connection Box (RTCB)**: The unit that interfaces between the RT and the users. It converts 220 VAC to -48VDC, and sends it on to the RT. The RTCB also splits the incoming data from the RT cable into two separate lines, one for E1 and one for IP. The RTCB does not store any configuration data, that is why when replacing an RTCB, there is no need for additional configuration of the AirMux-104 system.

2.3 Installing AirMux-104 Management Software

AirMux-104 management application is distributed on CD-ROM as an executable file. The application can be run under Windows™ 98/2000/NT/XP operating system.

➤ **To install the AirMux-104 management program:**

1. Insert the distribution CD-ROM into your CD-ROM drive.
2. Run Airmux.exe from the CD-ROM drive.
3. Follow the onscreen instructions of the installation wizard to complete setup of the AirMux-104 management program in the desired location.

2.4 Performing Initial Setup of AirMux-104

Before physical installation of the local and remote AirMux-104 units, you must perform initial setup of the system and download configuration parameters to the devices.

➤ **To perform initial setup:**

1. Prepare the 2m RT-to-RTCB configuration cable for initial setup.
2. Connect the first RTCB to its RT using the 2m configuration cable.
3. Power up the first RTCB (see *Connecting the Power* in Chapter 3).
4. Connect management station to the first RTCB.

5. Perform initial configuration of AirMux-104 and download the new parameters to the first unit.
6. Disconnect the configuration cable from the first RTSB and its RT.
7. Connect the second RTCB to its RT using the 2m configuration cable.
8. Connect the network management station to the second RTCB.
9. Download the new parameters to the second AirMux-104.

Any PC running the AirMux-104 management application can be used to configure AirMux-104 units.

➤ **To connect the management station to RTCB:**

- Connect a network interface card of the management station to the LAN 10/100 RJ-45 port local RTCB via a ***cross*** cable (refer to *Appendix A* for the cable pinout).

You must start AirMux-104 from the unit, which is intended for local installation.

➤ **To start AirMux manager:**

- From the **Start** menu, point to **Programs**, point to **AirMux Manager**, and then click **AirMux Manager**.

The AirMux Manager Main menu is displayed.

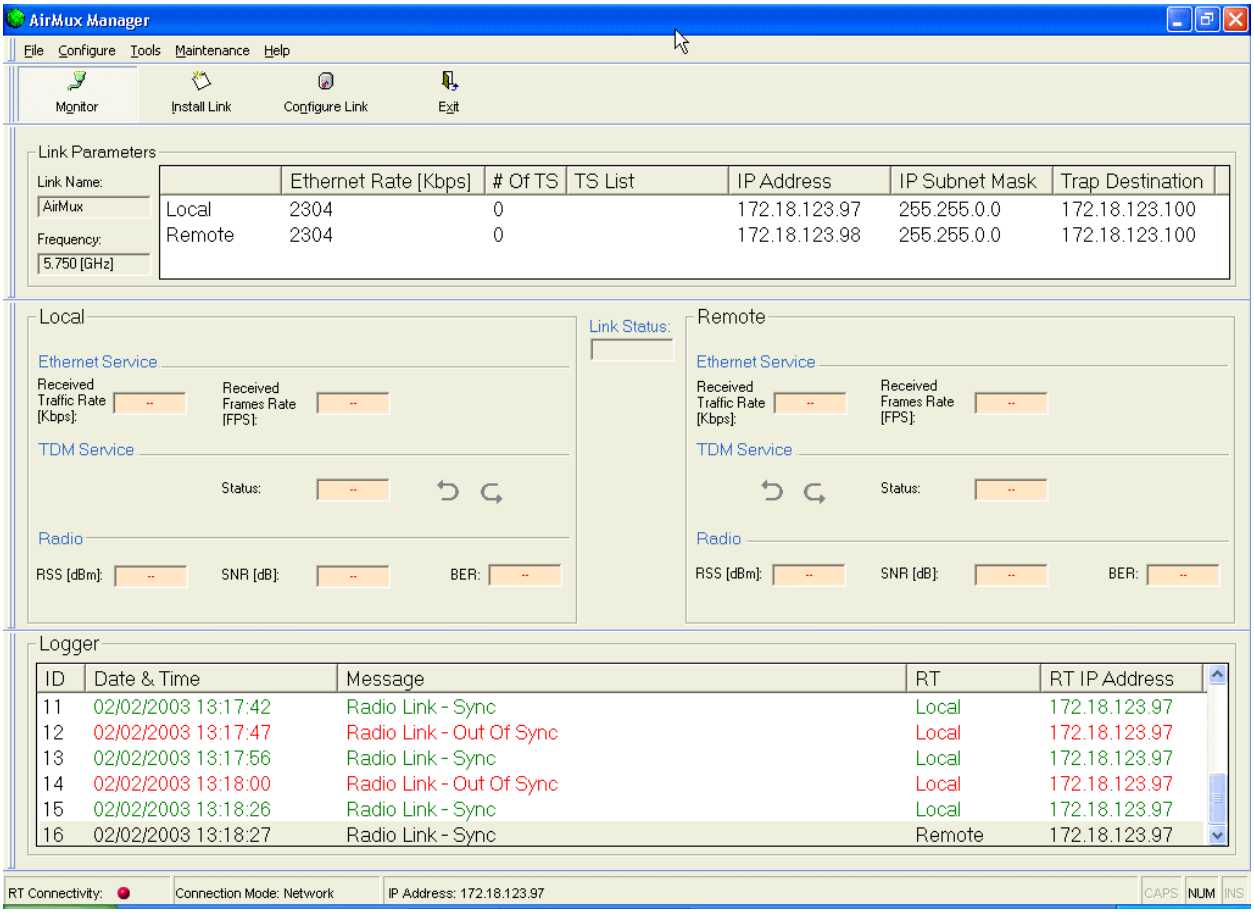

Figure 2-1. AirMux Manager Main Menu

Configuring General Parameters

In order to establish communication link between manager station and AirMux-104, you must select communication preference:

- Local (direct connection via cross cable)
- Network (connection via network to a specified IP address).

➤ **To change the communication preference:**

1. In the Tools menu, select **Preferences**.

   AirMux Manager displays confirmation message for the communication preference change (see *Figure 2-2*).

2. If you intend to change the communication preference change, click **Yes**.

   The Communication Preferences dialog box appears (see *Figure 2-3*).

3. In the Communication Preferences dialog box, click **Network**, and enter the RT IP address.
4. Click **OK**.

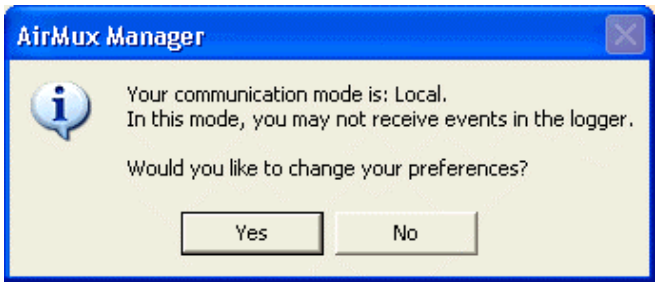

Figure 2-2. Confirmation Message for Communication Preference Change

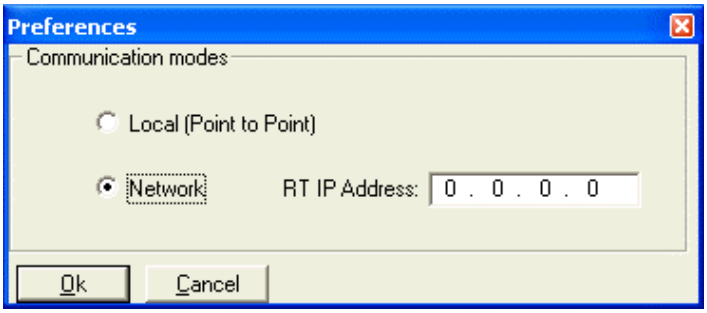

Figure 2-3. Communication Preferences Dialog Box

➤ **To change general parameters:**

1. In the Main menu, click **Install Link**.
2. The General Parameters dialog box appears (see *Figure 2-4*).
3. From the General Parameters dialog box, select the following parameters:
   - Product type – select the AirMux-104 product type:
     - Low band (5.255 GHz to 5.345 GHz)
     - Mid band (5.470 GHz to 5.725 GHz)
     - High band (5.730 GHz to 5.850 GHz)

Note *Currently AirMux-104 supports only the high band operation.*

- Channel – select operating channel supported by the current band
- Link name – enter a name for the link identification.

Table 2-1 lists channels and frequencies for DSSS and UNII bands.

Table 2-1. AirMux-104 Channels and Frequencies

Channel	DSSS Band	UNII Band
1	5730 MHz	–
2	5740 MHz	5740 MHz
3	5750 MHz	5750 MHz
4	5760 MHz	5760 MHz
5	5770 MHz	5770 MHz
6	5780 MHz	5780 MHz
7	5790 MHz	5790 MHz
8	5800 MHz	5800 MHz
9	5810 MHz	5810 MHz
10	5820 MHz	–
11	5830 MHz	–
12	5840 MHz	–

4. Click **Next**.

   The Service Parameters dialog box appears (see *Figure 2-5*).

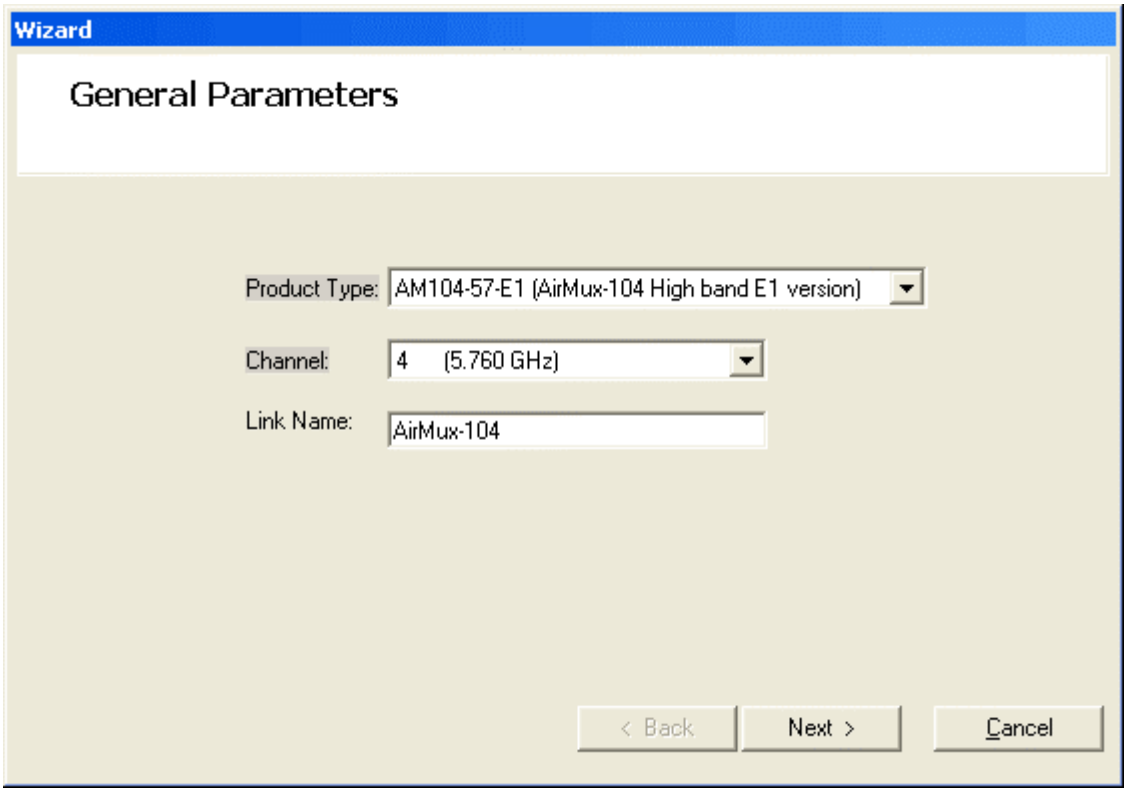

Figure 2-4. General Parameters Dialog Box

Configuring Service Parameters

In the Service Parameters dialog box you can configure E1 and Ethernet parameters. In addition, you can assign IP addresses of the local and remote AirMux-104 units.

➤ **To configure E1 and Ethernet parameters:**

1. In the General Parameters dialog box, perform the following steps:
   - Select the Ethernet Only check box, if you intend to transmit Ethernet data only.
   - Select E1 service type, framed or unframed.
     - Framed E1 – assign timeslots to carry data.
       You can assign all timeslots by clicking **Select All**, clear you selection by clicking **Clear All**.
       Timeslot 0 is reserved for framing information and cannot be selected to carry user's data.
     - Unframed E1 – all timeslots are assigned to carry data automatically.

Note *When you assign timeslots to carry E1 data, AirMux-104 automatically calculates the bandwidth remained for the Ethernet traffic. This value is displayed in the Data Rate field at the right-hand corner of the Service Parameters dialog box (see Table 2-2).*

   - Enable CRC-4 bit generation, if required.
   - Click **Next**, if you do **not** intend to configure IP parameters of the AirMux-104 units.

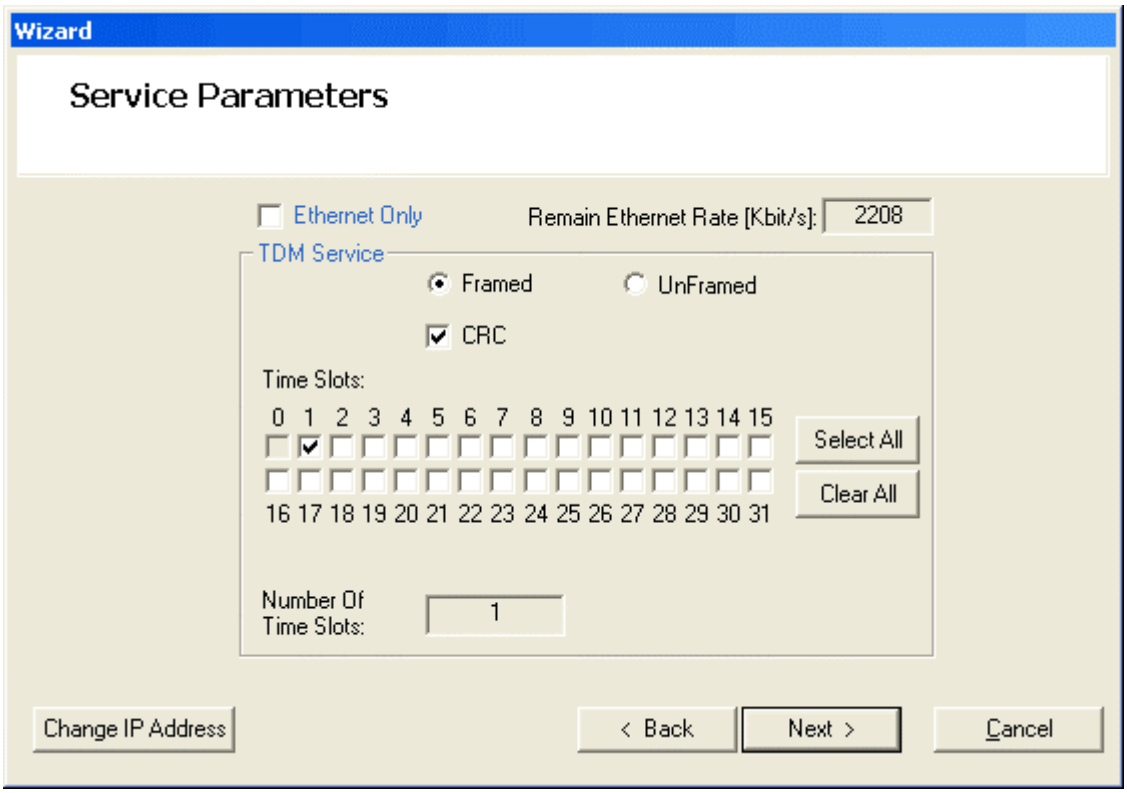

Figure 2-5. Service Parameters Dialog Box

Table 2-2. Correlation between the Number of Assigned Timeslots and Remaining Ethernet Bandwidth

Number of E1 Timeslots	**Remaining Ethernet Bandwidth** [kbps]
0	2304
1	2208
2	2112
3	1920
4	1920
5	1920
6	1824
7	1728
8	1728
9	1536
10	1536
11	1536
12	1440
13	1440
14	1248
15	1248
16	1248
17	1152
18	1152
19	1056
20	864
21	864
22	864
23	768
24	672
25	672
26	480
27	480
28	384
29	384
30	288
31	96
32	96

➤ **To assign IP addresses to the local and remote units:**

1. In the Service Parameters dialog box, click **Change IP Address**.

   The IP Parameters dialog box appears (see *Figure 2-6*).
2. In the IP Parameters dialog box, select the First check box to configure the IP parameters of the first AirMux-104.

   or

   Select the Second check box to configure the IP parameters of the second AirMux-104.
3. In the IP Parameters dialog box, enter IP address, IP subnet mask, default gateway and trap destination values for the first and/or second unit.
4. Click **OK**.
5. The Service Parameters dialog box appears (see *Figure 2-5*).
6. From the Service Parameters dialog box, click **Next** to proceed with the configuration download to the first unit.

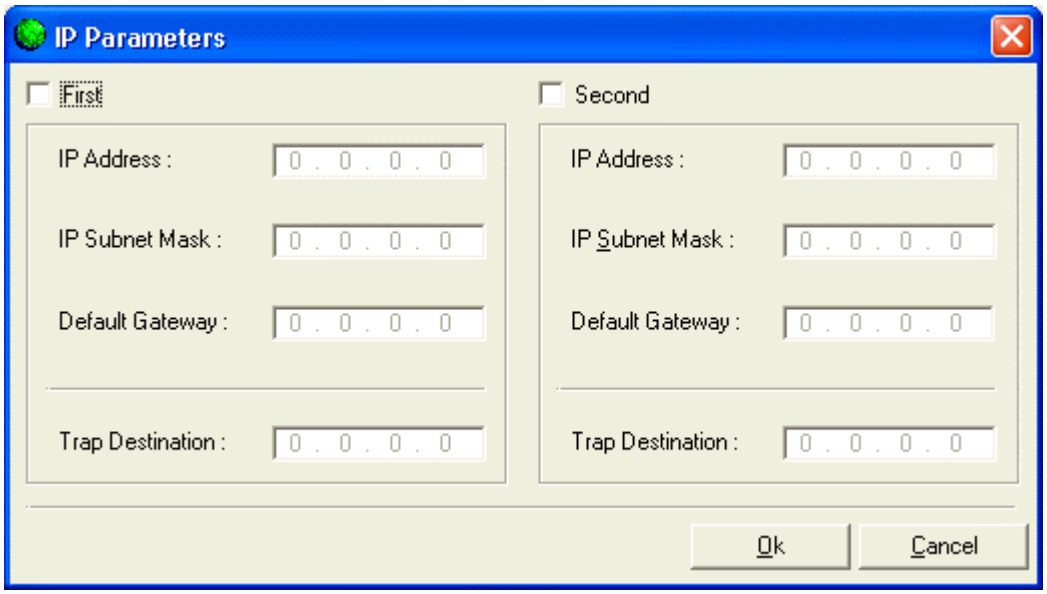

Figure 2-6. IP Parameters

Downloading Configuration Parameters

After completing system and service configuration, you must download new values to both AirMux-104 devices.

➤ **To download configuration data:**

1. Make sure that the management station is connected to the 10/100 LAN port of the RTCB, and click the Download button in the Download Data dialog box (see *Figure 2-7*).

   Downloading process to the first RT begins. Once the downloading to the first unit is completed, the upper Download button becomes dimmed.
2. Click the lower Download button to download configuration data to the second RT.

   After successfully completing software download to the second unit, AirMux-104 displays *Installation Completed Successfully* message (see *Figure 2-8*).

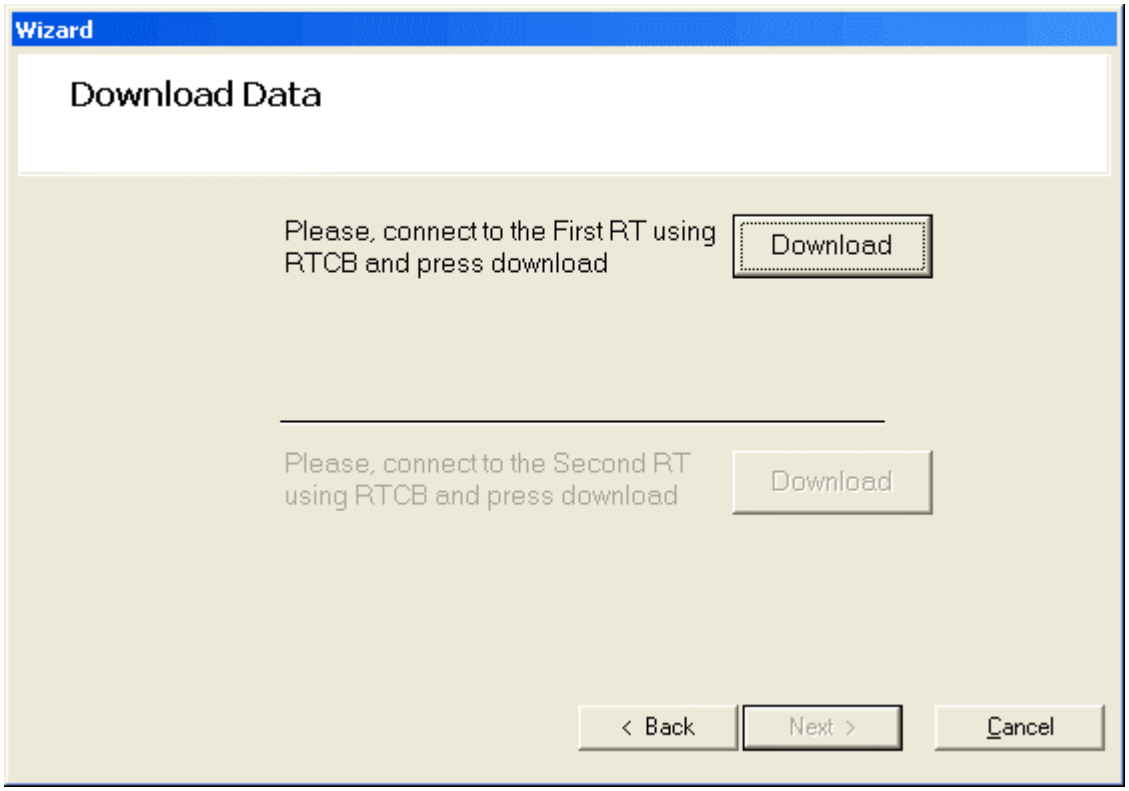

Figure 2-7. Download Data Dialog Box

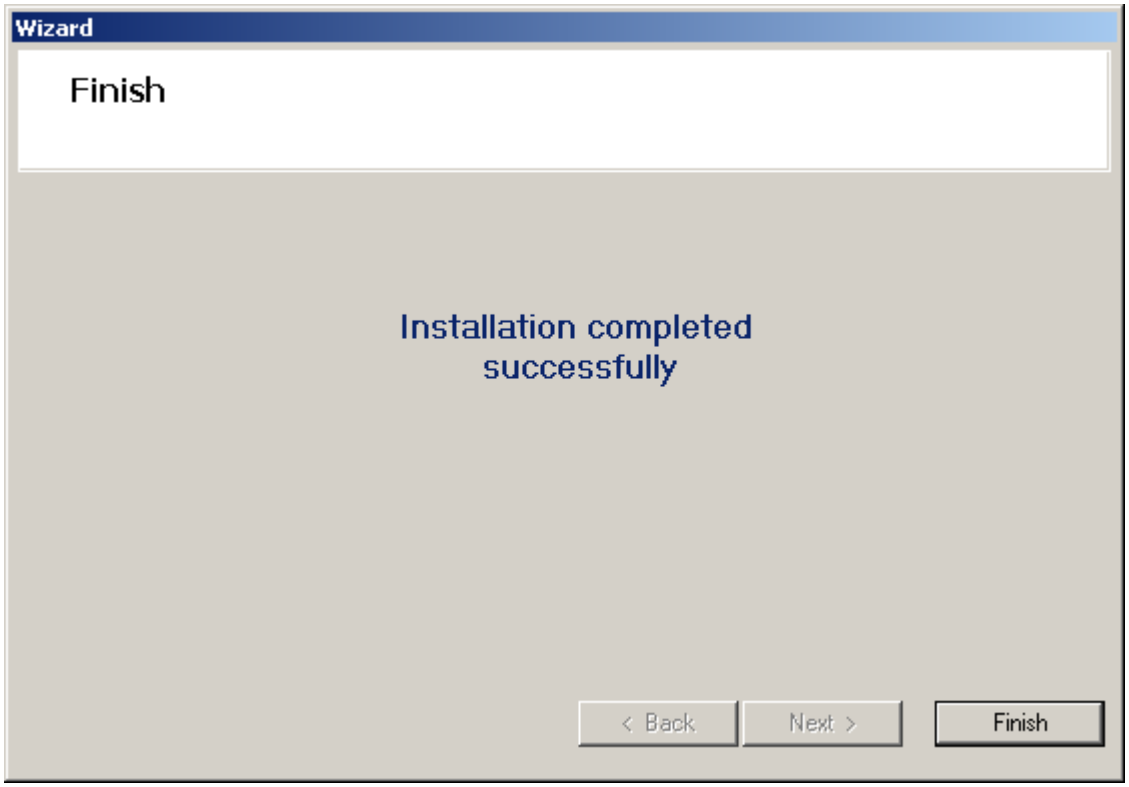

Figure 2-8. Installation Completed Successfully Message

Chapter 3

Installation and Setup

This chapter describes installation and setup procedures for AirMux-104 system.

After installing the unit, refer to *Chapter 4* for configuration instructions.

In case a problem encountered, refer to *Chapter 5* for test and diagnostic instructions.

Warning

Internal settings, adjustment, maintenance, and repairs may be performed only by a skilled technician who is aware of the hazards involved.

Always observe standard safety precautions during installation, operation, and maintenance of this product.

3.1 Site Requirements and Prerequisites

For the RTCB, allow at least 90 cm (36 in) of frontal clearance for operating and maintenance accessibility. Allow at least 10 cm (4 in) clearance at the rear of the unit for signal lines and interface cables.

The ambient operating temperature should be -45–60°C/-49–140°F (RT), or -5–45°C/23–113°F (RTCB) at a relative humidity of up to 90%, non-condensing.

3.2 Package Contents

The AirMux-104 package includes the following items:

- RT (radio terminal)
- RTCB (radio terminal connection box)
- RT cable
- AC/DC power converter
- AirMux-104 installation and operation manual
- RT mounting kit.

3.3 Installation and Setup

Physical installation of the AirMux-104 system includes the following steps in the given order:

1. Outdoor installation
   - Preparing the RT cable
   - Connecting the RT and the RTCB via the RT cable.
   - Mounting and aligning the RT.
2. Indoor installation
   - Connecting user equipment
   - Connecting power.

Figure 3-1 illustrates a typical installation of AirMux-104 (local or remote).

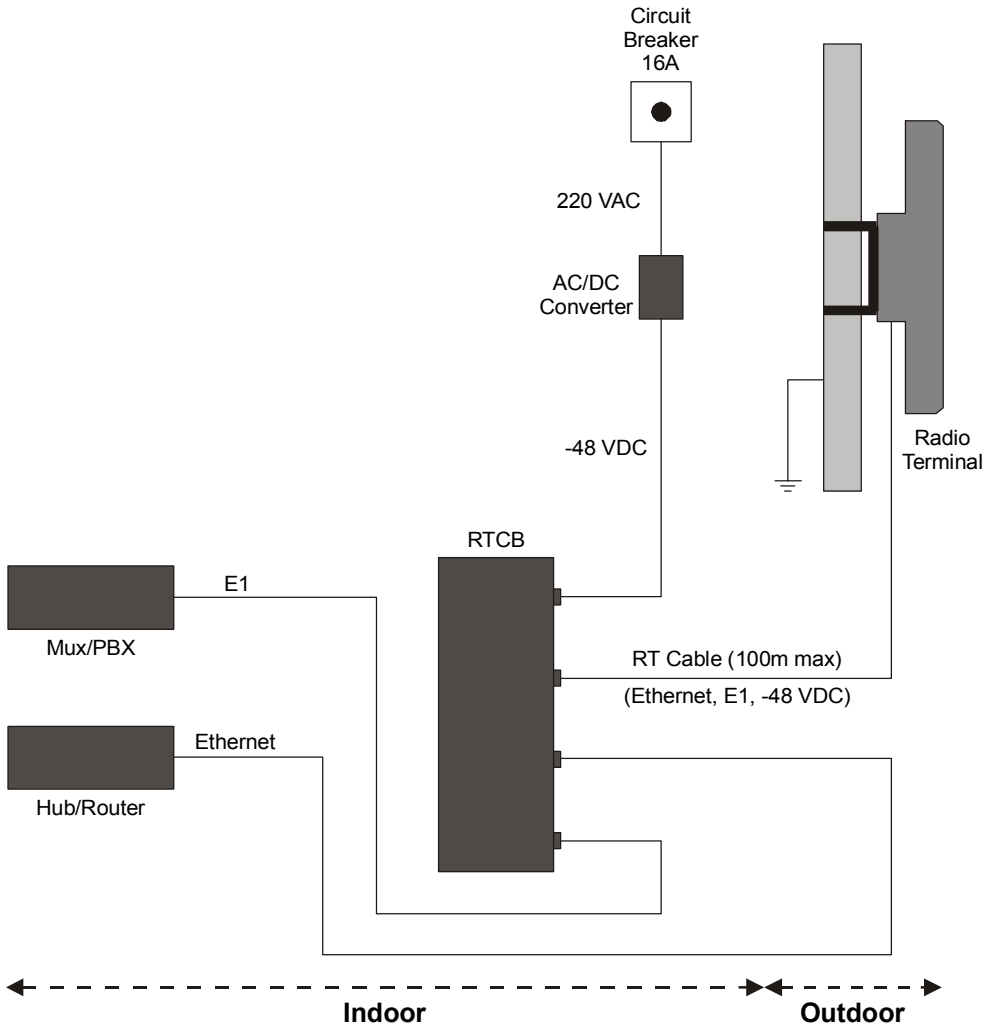

Figure 3-1. Typical Installation (for Reference and Illustration only)

Outdoor Installation

The outdoor installation process involves preparing the RT cable, connecting the RT and the RTCB, mounting the RT on the mast and aligning the RT.

Preparing RT Cable

The RT cable conducts all of the user traffic between the RTCB and the RT. The RT cable also provides -48 VDC supply to the RT. The maximum length for one leg of the RT cable is 100m (328 ft).

➤ **To prepare the RT cable:**

1. Measure the distance between the RT and the RTCB along the assigned path.
2. Cut the required length of RT cable, allowing some spare length.
3. Assemble the DB-25 connector at the RTCB end of the cable, refer to *Appendix A* for the connector pinout.
4. Route the cable from the RT location into the building, leaving some spare. Secure the cable along its path.

Connecting the RT to the RTCB

The RT cable is connected to the DB-25 female connector on the RTCB rear panel, designated RT CONNECTION. *Figure 3-2* illustrates a typical panel of the RTCB.

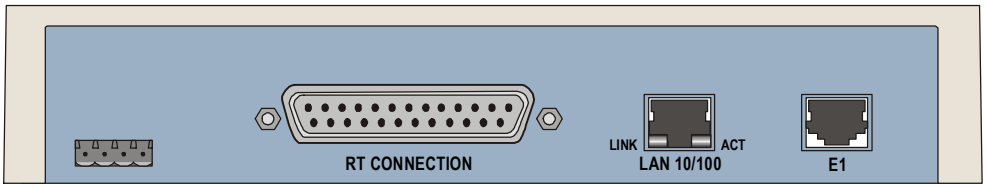

Figure 3-2. Rear Panel

Mounting and Aligning the RT

The RT is the transmitting and receiving element of the AirMux-104 system. The RT can be mounted on a mast or a wall. In both installation types, the supplied mounting kit is used to secure the RT. *Appendix B* describes the mast/wall installation instructions.

You can verify that the AirMux-104 units are aligned using the RSS/SNR, LINK and STATUS LEDs located at the base of the RT. Alternatively, this can be done via the AirMux management software.

Warning

Prior to connecting cables to the RT, the protective earth terminal (screw) of the RT must be connected to an external protective ground conductor or to a grounded mast.

Only a qualified person using the proper safety equipment should climb the antenna mast. Only trained professional installers should be used when installing or dismantling RTs and masts.

➤ **To install the RT:**

1. Verify that the RT mounting brackets are properly grounded.
2. Attach the RT unit to the mast, using the two strap clamps. Refer to *Appendix B* for the RT mounting instructions.
3. Connect the ground cable to the chassis point on the RT.
4. Attach the RT cable to the 16-pin Krone-type connector, refer to *Appendix A* for the connector pinout.
5. Secure the cables to the mast or brackets using provided UV-rated cable ties.
6. Repeat the procedure at the remote site.

Note *Do not tightly secure the RT to its mounting brackets, if the alignment process of the antenna is not yet complete.*

When installing the RT, it is important to check that there are no direct obstructions in front of the RT or interference from man-made obstacles.

➤ **To align the RTs via RT LEDs monitoring:**

1. Connect power to the RTCBs.
2. Turn the local RT in the direction of the remote RT.
3. At the remote site, align the RT to face the local RT. (Align visually or by using a map and a compass). Use the RSS/SNR, LINK and STATUS LEDs at the base of the RT for the link quality indication (see *Figure 3-3*, *Table 3-1* and *Table 3-2*):
   - RTs are not aligned:
     - Triple RSS/SNR LED is blinking
     - LINK LED is OFF
     - STATUS LED is blinking slowly.
   - RTs are aligned:
     - Triple RSS/SNR LED is blinking or lit steadily
     - LINK LEDs is lit steadily
     - STATUS LED is blinking rapidly.
4. Repeat step 3 for the local RT to complete the installation procedure.

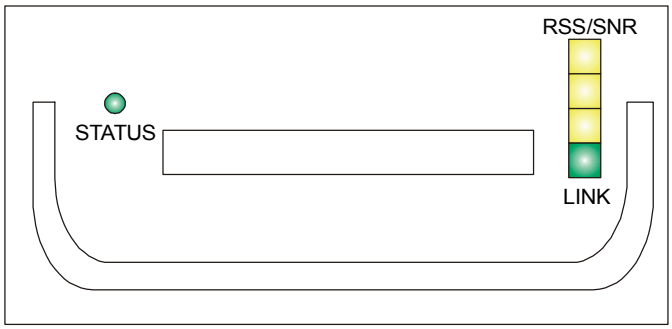

Figure 3-3. RT LEDs

When AirMux-104 units are not synchronized (LINK LED is OFF), the RSS/SNR LED indicates the radio signal strength (the more LED segments are lit, the stronger is the radio signal).

When the AirMux-104 units are synchronized (LINK LED is ON), the RSS/SNR LED indicates the signal-to-noise ratio (the more LED segments are lit, the better is radio link quality)

Table 3-1 and *Table 3-2* explain relation between the blinking and lit segments of the RSS/SNR LED and RSS/SNR values.

- ☐ represents a LED segment in the OFF state.
- ☐ represents a slowly blinking LED segment
- ■ represents a rapidly blinking LED segment
- ■ represents a steadily lit LED segment.

Table 3-1. RSS/SNR Triple LED Indication (RSS Mode)

Indication	Minimum	Maximum	Level	LEDs Status
RSS		-88 dBm	0	☐ ☐ ☐
RSS	-87 dBm	-87 dBm	1	☐ ☐ ☐
RSS	-86 dBm	-86 dBm	2	■ ☐ ☐
RSS	-85 dBm	-84 dBm	3	■ ☐ ☐
RSS	-83 dBm	-81 dBm	4	■ ☐ ☐
RSS	-80 dBm	-75 dBm	5	■ ■ ☐
RSS	-74 dBm	-67 dBm	6	■ ■ ☐

Table 3-1. RSS/SNR Triple LED Indication (RSS Mode) (Cont.)

Indication	Minimum	Maximum	Level	LEDs Status
RSS	-66 dBm	-53 dBm	7	
RSS	-52 dBm	-30 dBm	8	
RSS	-29 dBm	2 dBm	9	
RSS	2 dBm		10	

***Note**: Level 10 (all three LED segments are blinking slowly) indicates that the radio signal is excessively strong. That may cause link quality deterioration.*

Table 3-2. RSS/SNR Triple LED Indication (SNR Mode)

Indication	Minimum	Maximum	Level	LEDs Status
SNR		7 dB	0	
SNR	8 dB	8 dB	1	
SNR	9 dB	9 dB	2	
SNR	10 dB	10 dB	3	
SNR	11 dB	11 dB	4	
SNR	12 dB	12 dB	5	

Table 3-2. RSS/SNR Triple LED Indication (SNR Mode) (Cont.)

Indication	Minimum	Maximum	Level	LEDs Status
SNR	13 dB	13 dB	6	
SNR	14 dB	14 dB	7	
SNR	15 dB	15 dB	8	
SNR	16 dB	16 dB	9	

➤ **To align the RTs using the AirMux Manager:**

1. Connect power to the RTCBs.
2. Turn the local RT in the direction of the remote RT.
3. At the remote site, align the RT to face the local RT. (Align visually or by using a map and a compass).
4. Repeat steps 3 to 4 for the local RT to complete the installation procedure.
5. Make sure that the management station is properly connected to the local RTCB, and the AirMux Manager application is running.
6. In the Main menu, click **Monitor**.

   Once the wireless link is established between the local and remote units, the Link Status indication bar in the middle of the Main menu turns green. In addition, **Radio Link - Sync** message appears in the logger at the bottom of the Main menu.
7. Check the radio signal strength (RSS) and sound-to-noise ratio (SNR) in the Main menu. Rotate the local RT until the best RSS is found (better than -88 dBm). The SNR should be at least 9 dB. View these parameters for about 15 min. to verify stability.

Note *Try achieving the best possible RSS and SNR values.*

8. After achieving the best RSS and SNR levels, permanently attach the RT to the mast. Refer to *Appendix B* for the RT mounting instructions.

Warning **Do not stand in front of live radio terminal.**

Indoor Installation

The installation process for the indoor unit involves installing the RTCB and making all necessary connection to the user equipment and the power source.

Connecting the User Equipment

The RTCB is a standalone desktop, wall-mounted or rack-installed unit. *Figure 3-2* illustrates a typical rear panel of the RTCB.

➤ **To connect user equipment to the RTCB:**

1. Connect user mux or PBX to the RTCB rear panel RJ-45 port designated E1, refer to *Appendix A* for the connector pinout.
2. Connect user hub/router or any other compatible device to the RTCB rear panel RJ-45 port designated 10/100 LAN, refer to *Appendix A* for the connector pinout.

Note *Use straight cable for router connection, or cross cable for the PC connection.*

Connecting the Power

Warning

Before connecting any cable, the protective earth terminals of the AC/DC adapter must be connected to the protective ground conductor of the mains power cord. If you are using an extension cord (power cable) make sure it is grounded as well.

Any interruption of the protective (grounding) conductor (inside or outside the instrument) or disconnecting of the protective earth terminal can make this unit dangerous. Intentional interruption is prohibited.

Power is supplied to AirMux-104 via external AC/DC converter which receives power from 220 VAC source and converts it to -48 VDC.

➤ **To connect the power:**

1. Connect the 4-pin plug of the AC/DC converter to the 4-pin DC power connector on the RTCB rear panel.
2. Connect the AC/DC converter 3-prong plug to the mains outlet.

   The unit turns on automatically upon connection to the mains.

Chapter 4

Operation

This chapter provides the following information for AirMux-104:

- AirMux-104 front-panel indicators
- Operating procedures (turn-on, front-panel indications, performance monitoring and turn-off)
- Procedures for changing AirMux-104 configuration parameters.

4.1 Front Panel Indicators

The front panel of AirMux-104 includes a series of LED indicators that show the current operating status of the unit.

Figure 4-1 shows the front panel of the AirMux-104 unit. *Table 4-1* and *Table 4-2* describe the AirMux-104 indicators.

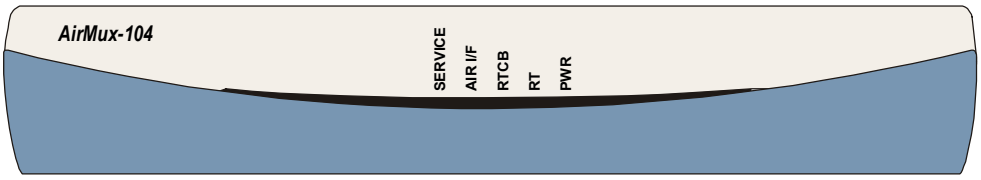

Figure 4-1. Front Panel

Table 4-1. RTCB LEDs

Name	Function	Location
SERVICE (green/red)	ON (green) – E1 line is synchronized ON (red) – Alarm is detected at the E1 interface	Front panel
AIR I/F (red)	ON (green) – Wireless link is synchronized ON (red) – Wireless link lost synchronization	Front panel
RTCB (green)	ON – RTCB self-test was completed successfully	Front panel
RT (green/red)	ON (green) – RT-to-RTCB communication link is operating properly ON (red) – RT-to-RTCB communication link is disrupted	Front panel
PWR (green)	ON – A power supply is ON	Front panel
LINK (green)	ON – Good Ethernet link integrity	Rear panel 10/100 LAN connector
ACT (yellow)	Blinks according to the Ethernet traffic	Rear panel 10/100 LAN connector

Table 4-2. RT LEDs

Name	Function	Location
RSS/SNR (triple yellow LED)	ON (AirMux-104 units are not synchronized) – Received signal strength ON (AirMux-104 units are synchronized) – Signal-to-Noise ratio	RT
LINK (square green LED)	OFF – AirMux-104 units are not synchronized ON – AirMux-104 units are synchronized	RT
STATUS (circular green LED)	Blinks slowly – AirMux-104 units are not synchronized Blinks rapidly – AirMux-104 units are synchronized	RT

4.2 Operating AirMux-104

Turning On AirMux-104

➤ **To turn on AirMux-104:**

- Connect the AC/DC converter to the RTCB power connector and to the mains.

  The PWR indicator lights up and remains lit as long as the RTCB receives power.

AirMux-104 requires no operator attention once installed, with the exception of occasional monitoring of front panel indicators and statistics data. Intervention is only required when AirMux-104 must be configured to its operational requirements, or diagnostic tests are performed.

Normal Indications

Upon turning on AirMux-104, the PWR LED in the front panel lights to indicate that AirMux-104 is on. *Table 4-3* shows the correct status of the indicators a few seconds after power-up.

Table 4-3. AirMux-104 Indicator Status

Indicator	Status
PWR	ON
RTCB	ON

If the above LED indications do not appear following initial power turn-on, refer to *Chapter 5* for the diagnostic test instructions.

Turning Off AirMux-104

➤ **To turn off AirMux-104:**

- Remove the AC/DC converter power cord from the mains.

4.3 Managing AirMux-104

Before starting management session, make sure that communication link between local and remote units exists. The Link Status indication bar in the middle of the Main menu must be green, *Radio Link - Sync* message appears in the alarm logger (see *Figure 4-2*).

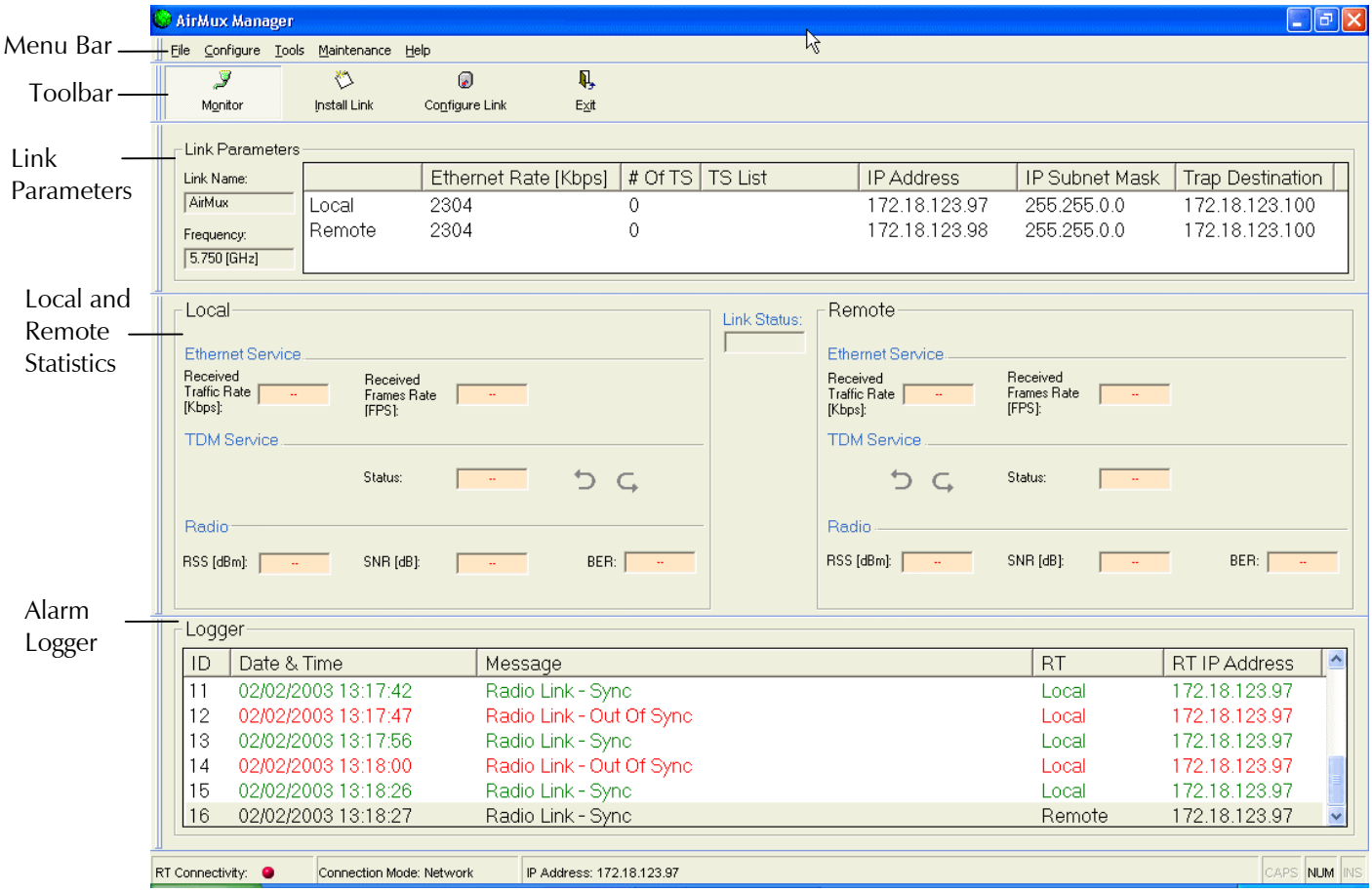

Figure 4-2. Main Menu, Wireless Link is Active

The AirMux Manager Main menu consists of the following elements:

- Toolbar – includes buttons serving for:
  - Connecting and disconnecting wireless (radio) link (Monitor button)
  - Performing preliminary configuration of the system (Install Link button)
  - Changing configuration parameters of operating wireless link, assigning text files for storing alarms, statistics and configuration data (Configure Link button)
  - Exiting AirMux Manager (Exit button)
- Menu bar – functions are identical to those of the toolbar.
- Link Parameters – summarizes information on the radio frequency, IP bandwidth, number of assigned E1 timeslots, and IP details of the local and remote AirMux-104 units.

- Local and Remote Statistics – monitor traffic between local and remote devices and collect following statistics:
  - Local/remote received traffic rate (in kbps)
  - Local/remote received frames rate (in fps)
  - Radio link status
  - E1 link status
  - Radio signal strength (in dBm)
  - Signal-to-noise ratio (in dB)
  - Bit error rate.
- Alarm logger – stores alarms generated by local and remote units.

Changing Configuration Parameters

AirMux-104 management software allows you to change configuration parameters of the radio link between two units, as well as parameters of their SNMP agents. In addition, you save your parameters in a form of TXT file.

Note *AirMux-104 restarts automatically in order to put configuration changes into effect.*

Before starting configuration procedure, make sure that the current configuration parameters of the local and remote appear in the Link Parameters display. If this data is not available, you must refresh the display.

➤ **To display local and remote unit current parameters:**

1. Click on **Local** or **Remote** in the Link Parameters display to select a local or remote AirMux-104.
2. Right-click on selected unit, and select **Refresh** on the shortcut menu.

   The Link Parameters displays IP bandwidth, number of assigned E1 timeslots, and IP details of the selected unit.

Selecting Communication Method

➤ **To change communication method:**

1. In the Tools menu, select **Preferences**.

   The Communication Preferences dialog box appears (see *Figure 4-3*).
2. In the Communication Preferences dialog box, select **Local (Point to Point)** or **Network**:
   - **Local (Point to Point)** – direct connection via cross cable
   - **Network** – connection via network to a specified IP address.

     For the network connection, enter IP address of the RT.
3. Click **OK** to finish communication method selection.

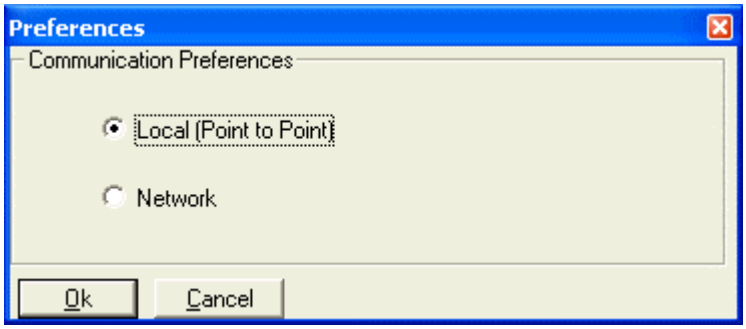

Figure 4-3. Communication Preferences Dialog Box

Selecting Configuration Parameters

You can set the AirMux-104 configuration parameters via Configure Link dialog box.

Note *AirMux Manager also provides the Configure RT dialog box (**Configure** > **Configure RT**), which is used to configure only the local AirMux-104 unit (the one that is connected to the management station).*

➤ **To change link configuration parameters:**

1. In the Main menu, click **Configure Link**.

   The Configure Link dialog box appears (see *Figure 4-4*).

2. In the Configure Link dialog box, click the **Radio** tab and enter a new link name, and/or radio channel value, if necessary.
3. Click the **IP** tab, and enter new IP parameters of the local and/or remote devices, if necessary.
4. Click the **Services** tab, and change Ethernet and/or E1 parameters, if necessary.
5. Once you finish changing configuration parameters, click **Apply**.

   Both AirMux-104s are automatically reset (initially remote unit, then the local one).

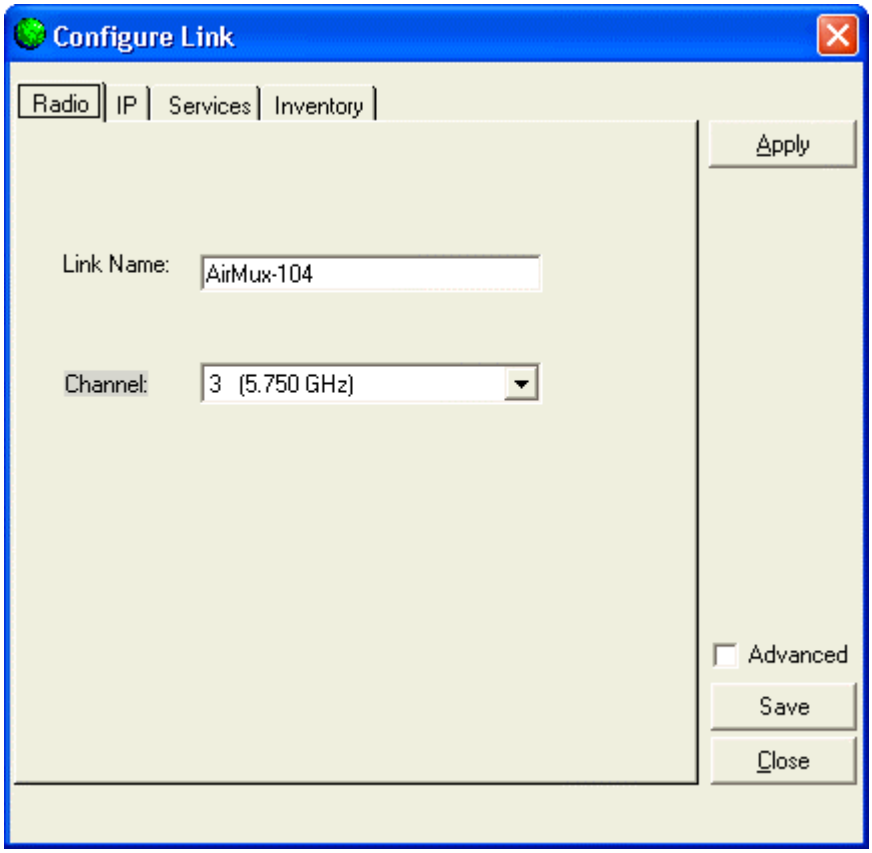

Figure 4-4. Configure Dialog Box

Resetting AirMux-104

Note *In order to maintain communication link, always reset remote AirMux-104 first***.**

➤ **To reset AirMux-104:**

1. Click on Local or Remote in the Link Parameters display to select a local or remote AirMux-104.
2. Right-click on selected unit, and select **Reset RT** on the shortcut menu.

   Local and remote units lose synchronization and Radio Link - Out of Sync alarm is stored in the alarm logger.

Saving AirMux-104 Configuration in a File

AirMux-104 management software allows you to save configuration parameters of the local and remote units as a TXT file.

➤ **To save AirMux-104 configuration in a file:**

1. In the Configure Link dialog box (see *Figure 4-4*), click **Save**.
2. In the Save As dialog box, indicate in which folder and under what name configuration file is to be saved, and click **Save**.

Displaying AirMux-104 Inventory

AirMux-104 inventory includes information on the hardware, firmware and software versions of the local and remote units.

➤ **To display inventory:**

- In the Configure Link dialog box, click the **Inventory** tab.

  The local and remote inventory information is displayed (see *Figure 4-5*).

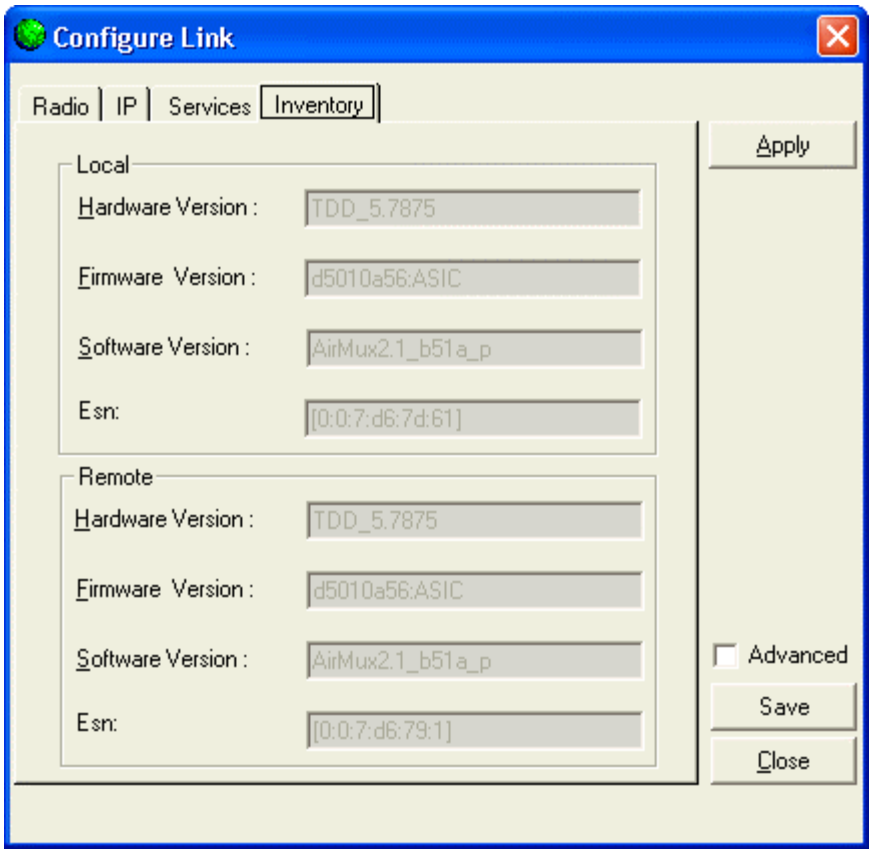

Figure 4-5. AirMux-104 Inventory

Chapter 5

Diagnostics and Troubleshooting

This chapter describes the AirMux-104 diagnostic functions, which include:

- Status indications, alarms, power-up self-test
- Statistics collection
- Diagnostic tests (local and remote loopbacks on E1 link).

5.1 Error Detection

Power-Up Self-Test

AirMux-104 performs a hardware test of the RTCB upon turn-on. This self-test checks the critical circuit functions of the unit. The RTCB LED indicates results of the self-test (see *Chapter 4* for the LED description).

Alarms

AirMux-104 detects fault conditions of the radio and user links and initiates alarms to alert the user. The user can save alarm log as a TXT file.

Alarms are displayed in the alarm logger (see *Figure 5-1*).

Alarm logger includes the following fields:

- Alarm sequential number
- Date and time stamp
- Alarm message
- Alarm source (local or remote RT)
- IP address of the RT that initiated alarm.

Table 5-1. AirMux-104 Alarms and Information Messages

Message	Description
Radio Link – Sync	Radio link is synchronized
Radio Link – Out Of Sync	Radio link lost synchronization
Device Resetting	RT was reset due to internal problem
E1 Interface – Normal	E1 interface is operating properly
E1 Interface – LOS	Loss of Synchronization is reported by E1 interface

Table 5-1. AirMux-104 Alarms and Information Messages (Cont.)

Message	Description
E1 Interface – LOF	Loss of Frame alignment is reported by E1 interface
E1 Interface – AIS	Alarm Indication Signal is reported by E1 interface
E1 Interface – RAI	Remote Alarm Indication is reported by E1 interface
E1 Interface – CRC	CRC error was detected at E1 interface
E1 Interface – CRC_E_BIT	CRC E-Bit error was detected at E1 interface
E1 Interface – Loopback	A loopback is active on E1 interface
Failed to download data to the remote RT	AirMux-104 failed to download configuration data to the remote RT
Failed to download data to the local RT	AirMux-104 failed to download configuration data to the local RT
Link Resetting	Wireless link was reset from the management station. This alarm is usually caused by automatic reset after link configuration.
Local RT Resetting	The local RT was reset from the management station.
Error loading trap catcher	AirMux Manager detected that the SNMP port 162 of the management station has been already captured by another application and cannot receive traps.

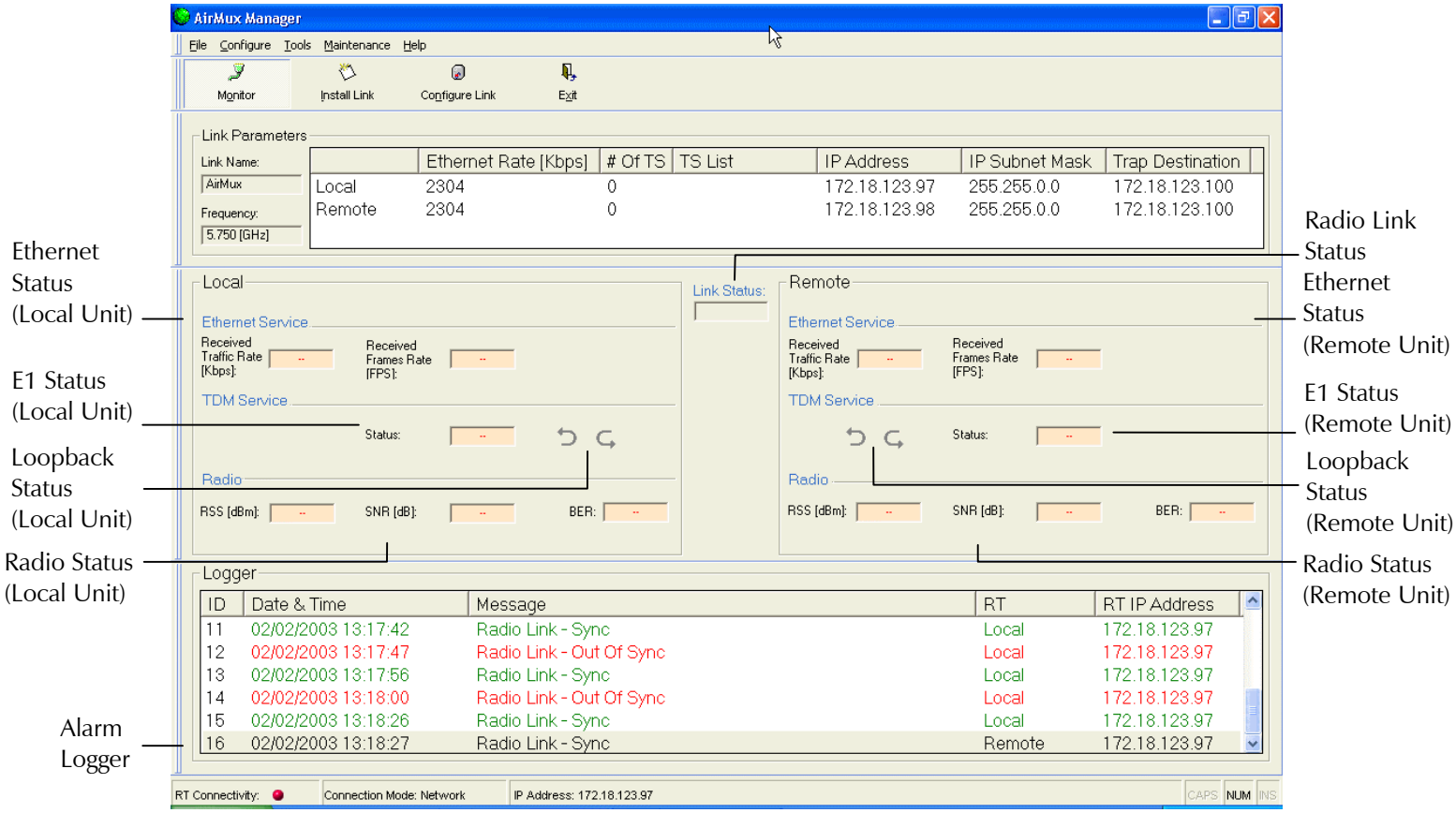

Figure 5-1. AirMux-104 Alarms and Status Indications

Saving Alarm Log

Alarm log can be saved as a TXT file. New alarms are automatically added to the text file, as they enter the alarm logger.

➤ **To save alarm log:**

1. From the Tools menu, choose **Logger Options**.

   Configure Logger Options dialog box appears (see *Figure 5-2*).

2. Click button and in the Select File dialog box indicate in which folder and under what name alarm log file is to be saved, and click **Save**.

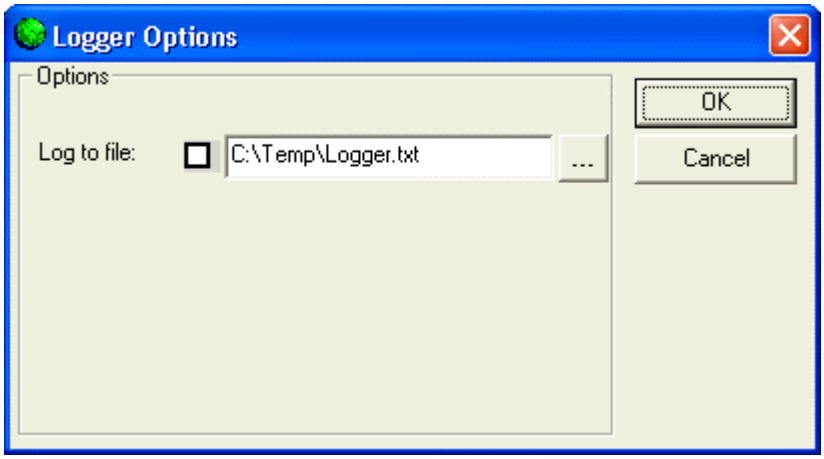

Figure 5-2. Logger Options Dialog Box

5.2 Collecting Statistics

AirMux-104 constantly monitors traffic over the radio link and collects the following statistics data:

- Local/remote received traffic rate (in kbps)
- Local/remote received frames rate (in fps)
- Radio signal strength (in dBm)
- Signal-to-noise ratio (in dB)
- Bit error rate.

Statistics log can also be saved as a text file.

➤ **To save statistics log:**

1. From the Tools menu, choose **Monitor Options**.

   Monitor Options dialog box appears (see *Figure 5-3*).

2. Click button and in the Select File dialog box indicate in which folder and under what name statistics log file is to be saved, and click **Save**.
3. In the Interval box, type or select statistics refresh interval (in sec.).

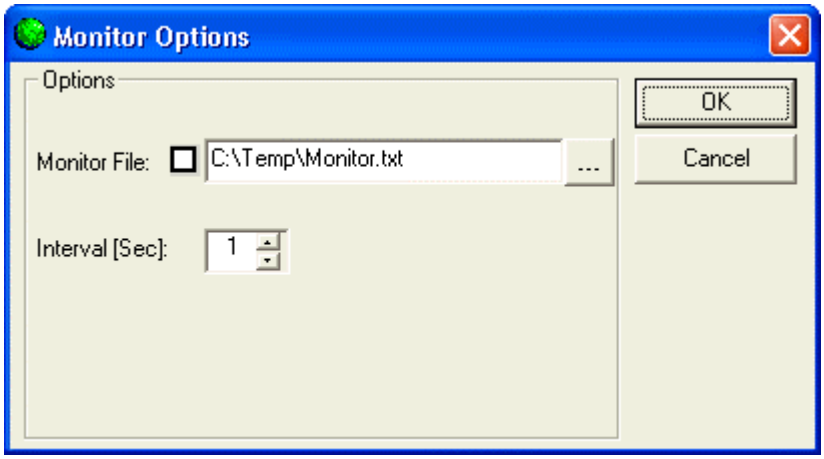

Figure 5-3. Monitor Options Dialog Box

5.3 Running Diagnostic Loopbacks

AirMux-104 supports activation of the internal and external loopbacks on the local and remote units.

➤ **To activate a loopback:**

1. From the Maintenance menu, choose **Activate Loopback**.

   The Loopbacks dialog box appears (see *Figure 5-4*).

2. From the Loopbacks dialog box, select a loopback that you intend to run, and click **OK**.

   AirMux-104 activates selected loopback. A loopback status arrow in the Main menu turns green to indicate an active loopback.

➤ **To deactivate a loopback:**

- From the Loopbacks dialog box, select **None**.

  A loopback status arrow in the Main menu becomes dimmed.

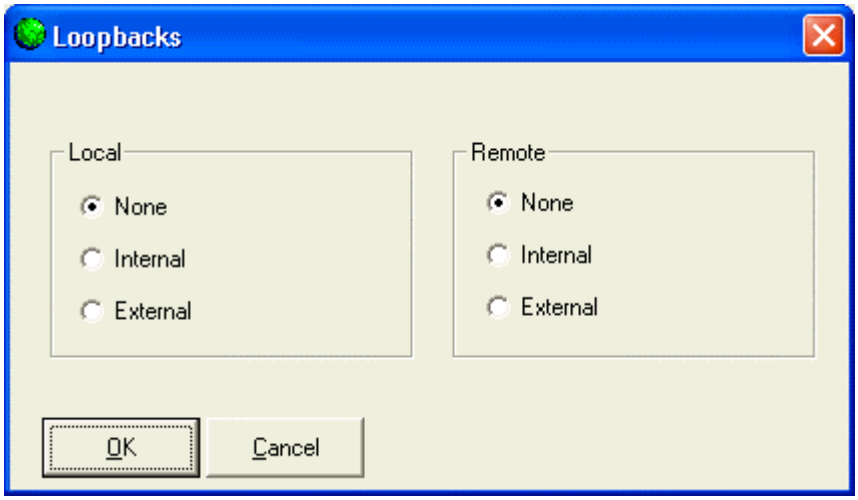

Figure 5-4. Loopbacks Dialog Box

Local External Loopback

Local AirMux-104 can be set to an external loopback to test the local E1 port and its connection to the local side user equipment. In this mode, data coming from the local user equipment is looped back to it (see *Figure 5-5*). This loopback is initiated from a management station connected to the local unit.

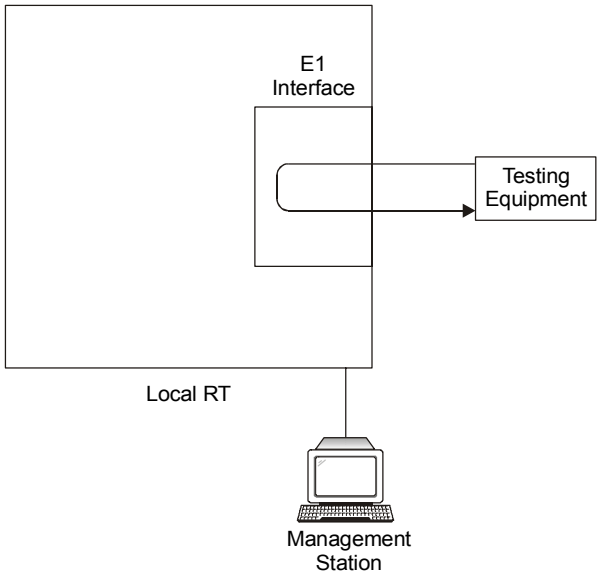

Figure 5-5. Local External Loopback

Remote Internal Loopback

Remote AirMux-104 can be set to an internal loopback to test connection between the local and remote units, the local E1 port and its connection to the local side user equipment. In this mode, data coming from the local AirMux-104 is looped back to it (see *Figure 5-6*). This loopback is initiated from a management station connected to the local unit.

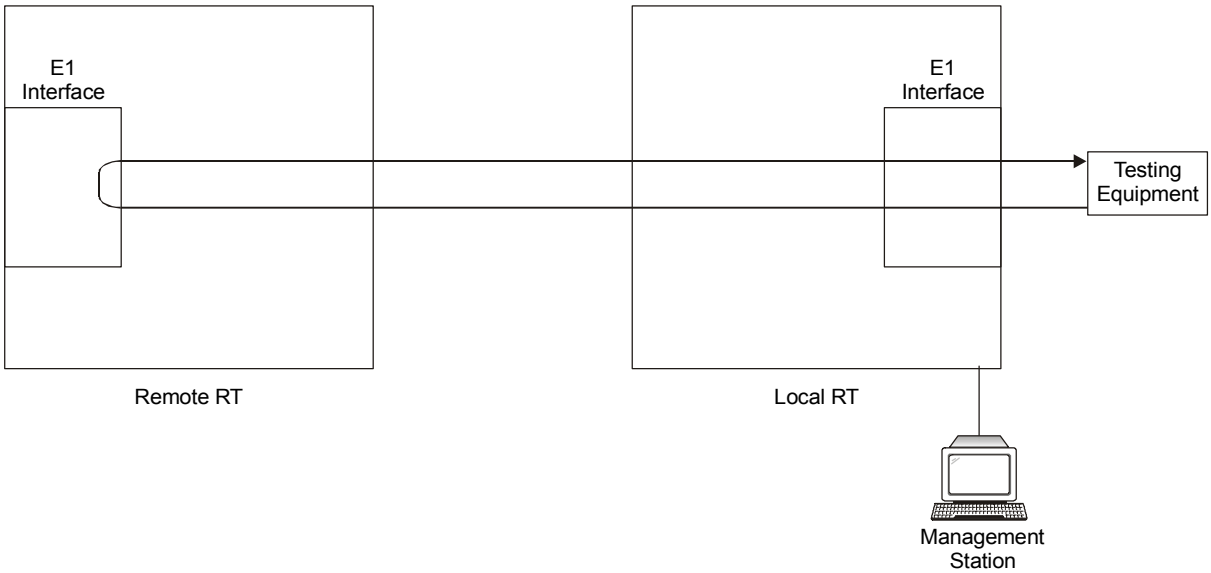

Figure 5-6. Remote Internal Loopback

Remote External Loopback

Remote AirMux-104 can be set to an external loopback to test the remote E1 port and its connection to the remote side user equipment. In this mode, data coming from the remote user equipment is looped back to it (see *Figure 5-7*). This loopback is initiated by an inband command sent from a management station connected to the local unit.

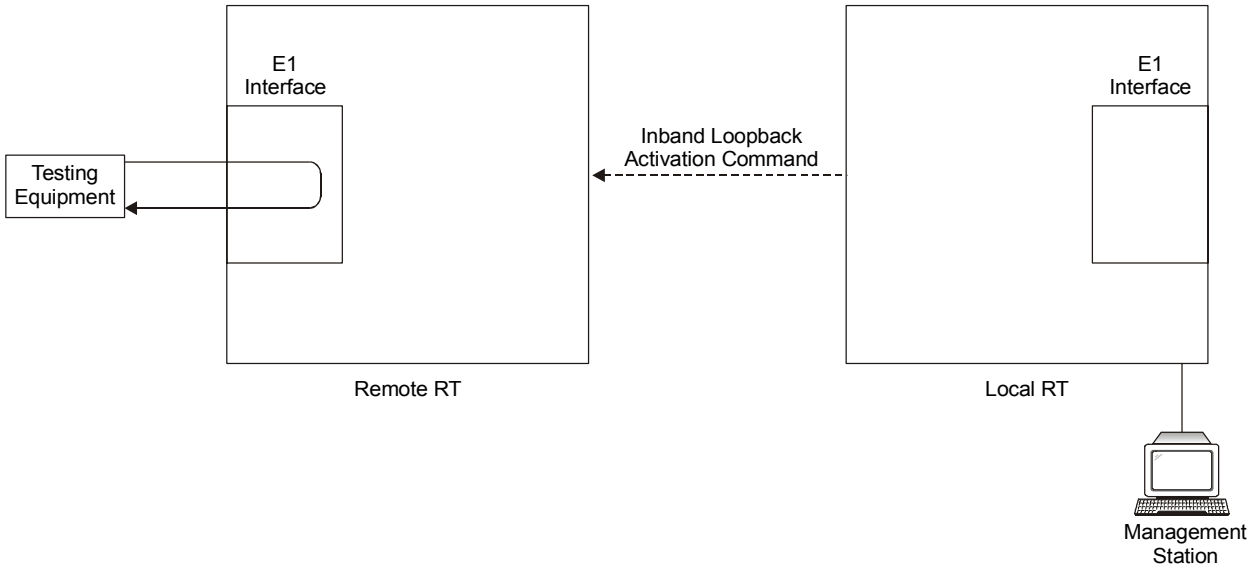

Figure 5-7. Remote External Loopback

Local Internal Loopback

Local AirMux-104 can be set to close an internal loopback to test connection between the local and remote units, remote E1 port and its connection to the remote side user equipment. In this mode, data coming from the remote user equipment is looped back to it (see *Figure 5-8*). This loopback is initiated by an inband command sent from a management station connected to the local unit.

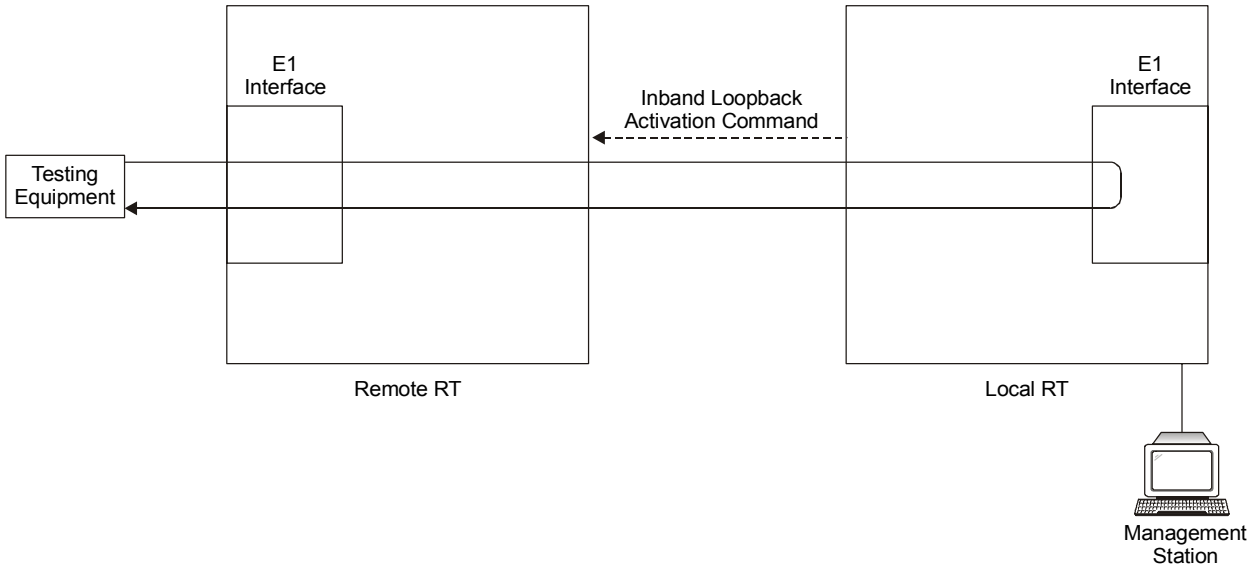

Figure 5-8. Local Internal Loopback

Appendix A
Wiring Specifications

A.1 RT Cable

The RT cable is 100Ω double-shielded data and power supply cable manufactured by Teldor Wires and Cables Ltd. (http://www.teldor.com). The cable contains six individually shielded twisted pairs and four power supply wires.
The RT cable terminates in 16-pin Krone-type (RT side) and DB-25 male (RTCB side) connectors. *Table A-1* describes connector pinouts.

Table A-1. RT Cable Connector Pinouts

	RTCB Connector Pin (DB-25)	Wire Color	RT Connector Pin (16-pin)	Function
	13	Red/white	1	Power
	25	Red/yellow	2	
	23	Black	3	
	10	Black	4	
Twisted	20	Blue	5	E1
	7	White	6	
Twisted	21	Red	7	
	8	White	8	
Twisted	5	Orange	9	N.C.
	18	White	10	
Twisted	4	Green	11	
	17	White	12	
Twisted	14	Brown	13	Ethernet
	15	White	14	
Twisted	2	Gray	15	
	1	White	16	

A.2 User Port Connectors

The RTCB includes ports for connecting E1 and Fast Ethernet user devices.

E1 Port

E1 interface terminates in an 8-pin RJ-45 balanced connector, wired in accordance to *Table A-2*.

Table A-2. E1 Connector Pinout

Pin	Function
1, 2	Receive (input)
4, 5	Transmit (output)

Fast Ethernet Port

Fast Ethernet interface terminates in an 8-pin RJ-45 connector, wired in accordance to *Table A-3*.

Table A-3. Fast Ethernet Connector Pinout

Pin	Signal	Function
1	TD (+)	Transmit Data (positive)
2	TD (-)	Transmit Data (negative)
3	RD (+)	Receive Data (positive)
6	RD (-)	Receive Data (negative)

Appendix B

Mast and Wall Installation

RT units can be installed on masts or walls.

B.1 Mounting Kit Contents

The RT mounting kit includes the following items:

- One mounting plate (see *Figure B-1*)
- One pivoting bracket (see *Figure B-2*)
- One extension arm for wall installation (see *Figure B-3*)
- Two metal strap clamps (see *Figure B-4*)
- Four bolts with locking washers
- Three hex nuts with plastic inserts.

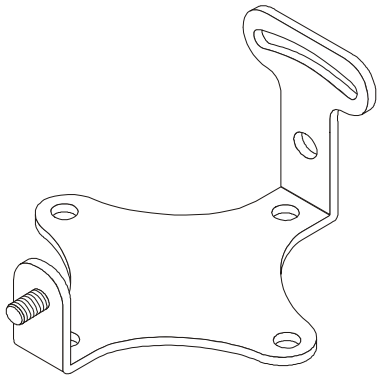

Figure B-1. Mounting Plate

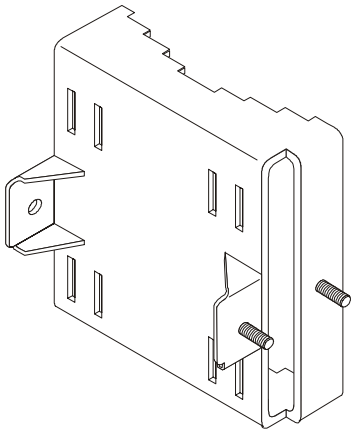

Figure B-2. Pivoting Bracket

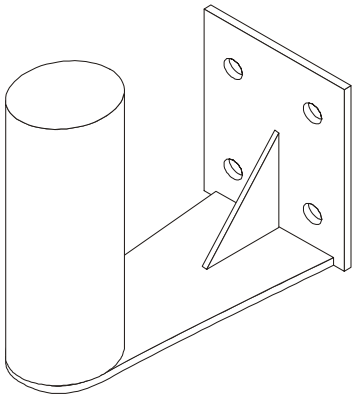

Figure B-3. Extension Arm

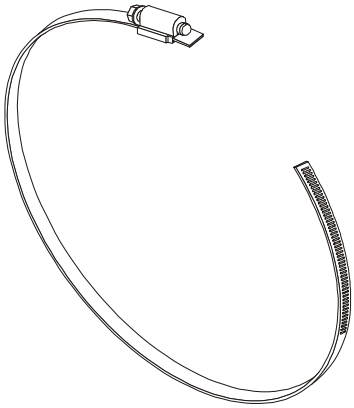

Figure B-4. Metal Strap Clamp

B.2 Mounting AirMux-104 on a Mast

The kit allows you to mount the RT on masts, whose diameter is between 5 cm (1.9 in) and 8 cm (2.3 in).

➤ **To install the RT on the mast:**

1. Insert both strap clamps through the vertical slots in the pivoting bracket. Make sure to use the slots that match the mast diameter.
2. Attach the pivoting bracket assembly to the mast using the strap clamps, but do not completely tighten the strap clamps yet.
3. Fasten the mounting plate to the rear of the RT, using the four bolts and locking washers. Make sure that the curved slot of the mounting plate is facing the two-bolt side of the pivoting bracket.
4. Attach the RT assembly to the pivoting bracket on the mast, so that:
   - The two bolts on the pivoting bracket enter the hole and curved slot in the mounting plate.
   - The mounting plate bolt enters the hole in the pivoting bracket.
5. Attach the three hex nuts, but do not tighten them.
6. Align the RTS, as explained in *Mounting and Aligning the RT* in Chapter 3.
7. When the alignment process is completed, permanently fasten the RT to the mast by tightening the hex nuts and the strap clamps.

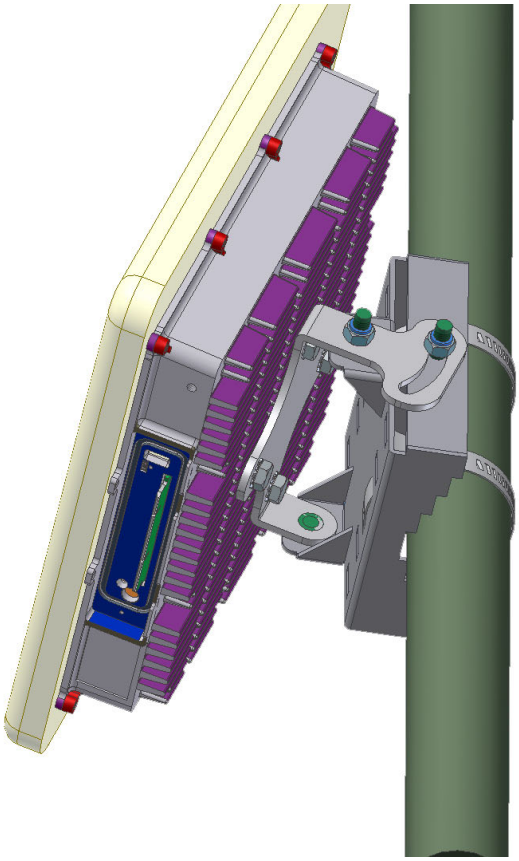

Figure B-5. RT Mounted on a Mast

B.3 Mounting AirMux-104 on a Wall

The mounting kit includes an extension arm for the wall installation.

➤ **To attach the RT to the mast:**

1. Fasten the extension arm to the wall by using four screws (not included).
2. Attach the RT to the extension arm, as explained in the mast mounting instructions above.

24 Raoul Wallenberg St., Tel Aviv 69719, Israel
Tel: +972-3-6458181, Fax: +972-3-6483331, +972-3-6498250
E-mail: erika_y@rad.co.il, Web site: www.rad.com

Customer Response Form

RAD Data Communications would like your help in improving its product documentation. Please complete and return this form by mail or by fax or send us an e-mail with your comments.

Thank you for your assistance!

Manual Name: AirMux-104

Publication Number: 193-200-03/03

Please grade the manual according to the following factors:

	Excellent	*Good*	*Fair*	*Poor*	*Very Poor*
Installation instructions	❒	❒	❒	❒	❒
Operating instructions	❒	❒	❒	❒	❒
Manual organization	❒	❒	❒	❒	❒
Illustrations	❒	❒	❒	❒	❒
The manual as a whole	❒	❒	❒	❒	❒

What did you like about the manual?

_____

_____

_____

_____

_____

Error Report

Type of Error(s) or Problem(s):

- ❒ Incompatibility with product
- ❒ Difficulty in understanding text
- ❒ Regulatory information (Safety, Compliance, Warnings, etc.)
- ❒ Difficulty in finding needed information
- ❒ Missing information
- ❒ Illogical flow of information
- ❒ Style (spelling, grammar, references, etc.)
- ❒ Appearance
- ❒ Other _____

Please list the exact page numbers with the error(s), detail the errors you found (information missing, unclear or inadequately explained, etc.) and attach the page to your fax, if necessary.

_____

_____

_____

_____

Please add any comments or suggestions you may have.

_____

_____

_____

You are:

- ❒ Distributor
- ❒ End user
- ❒ VAR
- ❒ Other _____

Who is your distributor? _____

Your name and company: _____

Job title: _____

Address: _____

Direct telephone number and extension: _____

Fax number: _____

E-mail: _____

data communications

www.rad.com

INTERNATIONAL HEADQUARTERS:

24 Raoul Wallenberg Street, Tel Aviv 69719, Israel, Tel: 972-3-6458181
Fax: 972-3-6498250, 972-3-6474436, Email: rad@rad.co.il

U.S. HEADQUARTERS:

900 Corporate Drive, Mahwah, N.J. 07430, Tel: (201) 529-1100
Toll Free: 1-800-444-7234, Fax: (201) 529-5777, Email: market@radusa.com

Publication No. 193-200-03/03