MRS2-32B
Label Sample & Location

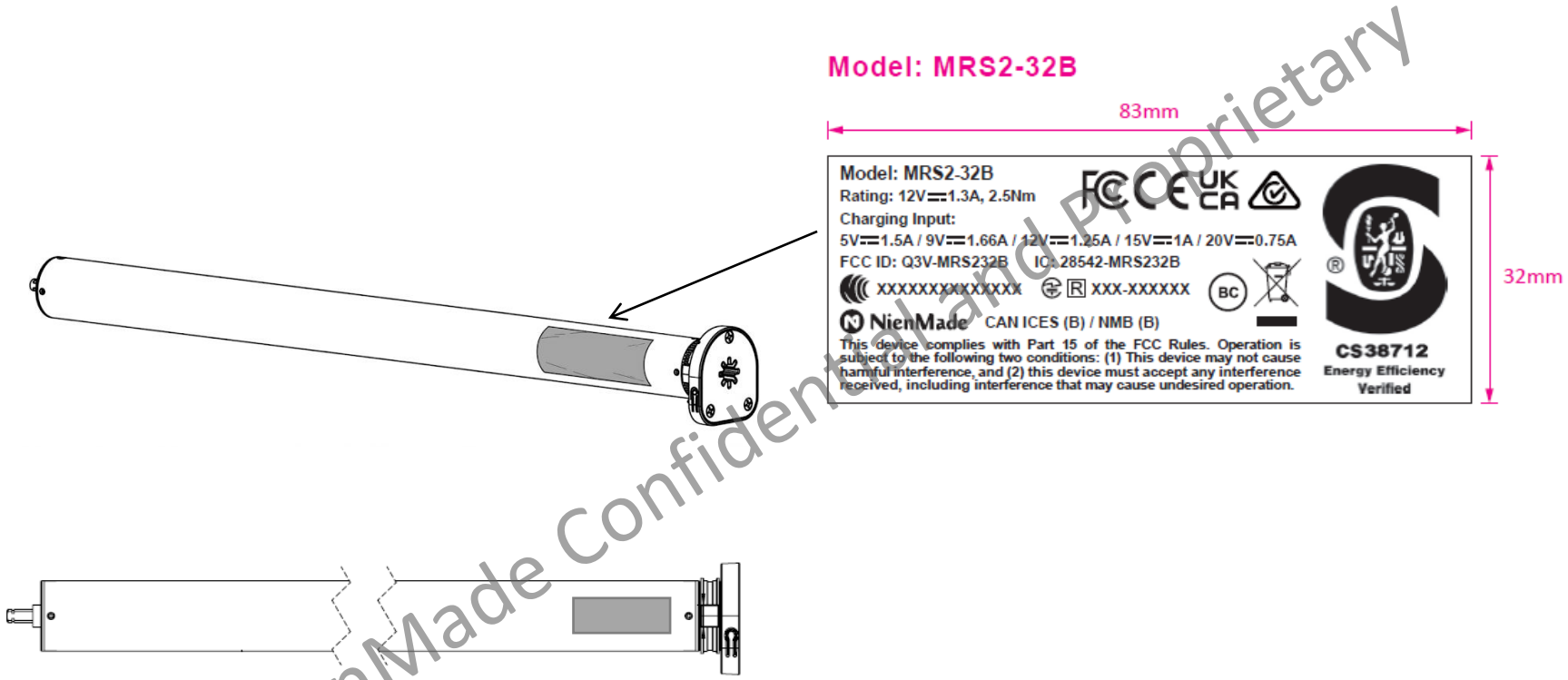

NienMade Confidential and Proprietary