Five-band Signal Booster For In-building

User Guide
&
Installation Manual

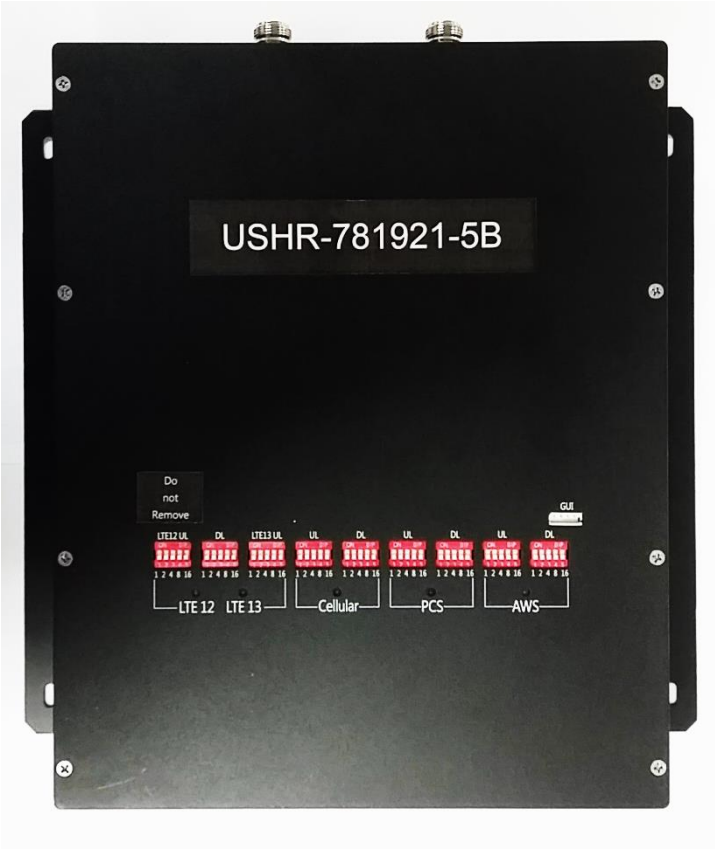

Model : USHR-781921-5B

Contents

1. Introduction
2. Kit Information
3. Installation
4. Troubleshooting
5. Specifications
6. Certificates
7. Contact Info.

Model: USHR-781921-5B

Leading Edge Technology Signal Booster

USHR-781921-5B signal booster designed to boosts cellular signal for area prone to weak coverage area. Its coverage is on 800 MHz, 1900MHz, AWS and 4G Verizon and AT&T 700 MHz as well as 4G Sprint. To allow installer to optimize signal and gain control each frequency band, it has control knobs.

1. INSTRODUCTION

1.1. Precautions

This is a CONSUMER device.

This is a CONSUMER device.
BEFORE USE, you MUST REGISTER THIS DEVICE with your wireless provider and have your provider's consent. Most wireless providers consent to the use of signal boosters. Some providers may not consent to the use of this device on their network. If you are unsure, contact your provider. You MUST operate this device with approved antennas and cables as specified by the manufacturer. Antennas MUST be installed at least 20cm (8 inches) from any person. You MUST cease operating this device immediately if requested by the FCC or a licensed wireless service provider. WARNING. E911 location information may not be provided or may be inaccurate for calls served by using this device.

Reference : Direction/Information for the proper operation

Cautions : Information for users to avoid malfunctions

Warning : Instruction for users to avoid unexpected hazard

1.1.1 Do not drop the device
- It may damage the product and its function

1.1.2 Do not place near magnetic material
- It may cause possible malfunction

1.1.3 Product is recommended to be used with included AC/DC adapter
- It may cause possible malfunction

1.1.4 Install the product where it is recommended
- It may not properly operate if it is not recommended location

1.1.5 Do not disassemble/ repair the product
- Warranty may void once you disassemble the product.

1.1.6 Turn off the device immediately if a smoke or any strange odor is detected from the product.

1.1.7 Use included bolts to install on the wall. Make sure it is safely installed before operation

1.1.8 Outside Antenna must be installed no longer than 32 feet(10 meter) above ground

1.1.9 This signal boosters are designed to be operated in a designated area in a building.

1.2 . Summary & Features

1.2.1. Summary

This signal booster can be installed on residential area, office, warehouse etc. . Following is advantages of using Five-band signal booster.

I. Decrease dropped call rate
II. Increase signal strength
III. Improve Data / Voice quality
IV. Prolong hand phone battery life
V. Improve data Communication Rate

This Signal booster solves coverage problems and improves connection quality in the building. In addition, this covers LTE of Band 12, Band 13, Cellular Band 5, AWS Band 4 and PCS Band 25 for mobile phone users. (Please see page 20 for operating frequency in details)

1.2.2. Features

I. Wider Coverage area
- **Band 12 Gain DL 60dB / UL 60dB**
- **Band 13 Gain DL 60dB / UL 61dB**
- **Band 5 Gain DL 62dB / UL 61dB**
- **Band 4 Gain DL 70dB / UL 68dB**
- **Band 25 Gain DL 69dB / UL 68dB**

II. ALC(Automatic output Level Control)
- **Stabilize operation in any radio environment**

III. Fulfill revised FCC rule at +23dBm output power
- **Provide high data communication rate**

IV. Easy gain control by dip switch located on the front side of product

V. Support five band
- **Enable to connect service from multiple carrier simultaneously**
- **Band 12/13/5/4/25 service simultaneously**
- **Band 12/13/5/4/25 adopt independent operation algorithm**

VI. Check status of booster by LED indicator

VII. Allow to manage and control product by GUI(Graphic User Interface)

- Please ask professional installer about GUI Program

VIII. Enable to stay connected in homes and offices

- Please ask professional installer for installation on homes & offices

IX. Device status with LED light(see page 17)

X. Automatic isolation detection and gain setting

- If the device is shut down, turn on again after turning off the AC power.

XI. Uplink sleep mode

- If no signal has been detected for 5 minutes, Uplink path will be shut down.

XII. UL/DL gain interlocking mode

1.3 Functions

I. Automatic Shut Down Mode

Built-In Automatic Self-Monitoring Features for Anti-Oscillation:

Automatic shut down mode operates when oscillation in the uplink and downlinks bands are detected and terminates potential harmful interference to wireless networks.

- **1 minute non-operative mode** on the first initial oscillation detection.
- **Default algorithm re-set mode** as Auto S/D Mode is cleared
- **Complete shut off mode** on the 5th repetition of auto shutdown mode status. All path are independently monitored and operated.

II. Intermodulation Gain & Power Limit Control

Uplink & downlink path formulates consistent link balance to regulate its input and output gain & power limits.

Max UL gain < - 34dB – RSSI + MSCL (" FCC 13-21,(i), 78p")

RSSI : Downlink composite received signal power at the donor port (calculation value : DL Output – DL Gain)

MSCL : Mobile station and repeater service port minimum coupling Loss (setting value)

All path gain limits are independently controlled

III. ALC (Automatic Level Control) & AGC

ALC is implemented to keep regular output power level for abnormal high input signal level.
The regular output power makes possible high quality of phone call and data transfer.
AGC is designed to automatically control gain.

- **Optimal Window Size** (frequency range) sets the optimal level to increase faster response to modulated signal level changes on the basis of gain power control via signal input/output differential calculation all path gain limits are independently controlled

IV. UL Path Automatic Sleep Mode

If coverage is non-existent (Zero Area Zone), Uplink path shuts off as *a harmful interference avoidance* protocol and minimizes its power consumption.

IV. UL Path Automatic Sleep Mode (continue)

- **Automatic Turn Off / if UL PATH < -90dBm**
- **Automatic Turn On / if UL PATH > -88dBm**

**All path gain limits are independently controlled

V. Oscillation Auto Prevention

- **Degradation Protection:** Detects potential performance degradation due to the overload signal feedback (over-heating) signals by isolation check & gain configuration.
- **Feedback Limits**: Sets the operating range to exceeding high level signals from donor antenna (outside antenna) of a signal booster to service antenna (inside antenna)

  Booster Gain < Antenna to Antenna Isolation – 15dB

If optimal isolation gain is not attained, Relevant path shuts off automatically.

**All bands are independently controlled

2. Kit Information

① USHR-781921-5B

② AC/DC Adapter

③ User Guide

④ Installation bolts

① USHR-781921-5B : 5 Band BTS and mobile phone signal booster

② AC/DC Adaptor : 110VAC power supply

③ User Guide : Operation & Installation manual

④ Installation Bolts : Holds signal booster on the vertical wall

● List of approved antennas & cables

Antenna			RF Cable	
Item	Model	Gain	Model	Cable type
Service Antenna (Indoor Antenna)	TS260771	+8dBi	AC200000	LMR200
	TS250374	+5dBi	TS320000	RF240
	TQI-700/2700-SJ-01	+2dBi	TS340000	RF400
Donor Antenna (Outdoor Antenna)	TS210471	+4.5dBi	TS350000	½″
	TS220971	+9dBi	TS360000	½″
	TDI-690/2500-SJ	+7dBi	-	-

3. Installation

3.1 Installation Diagram

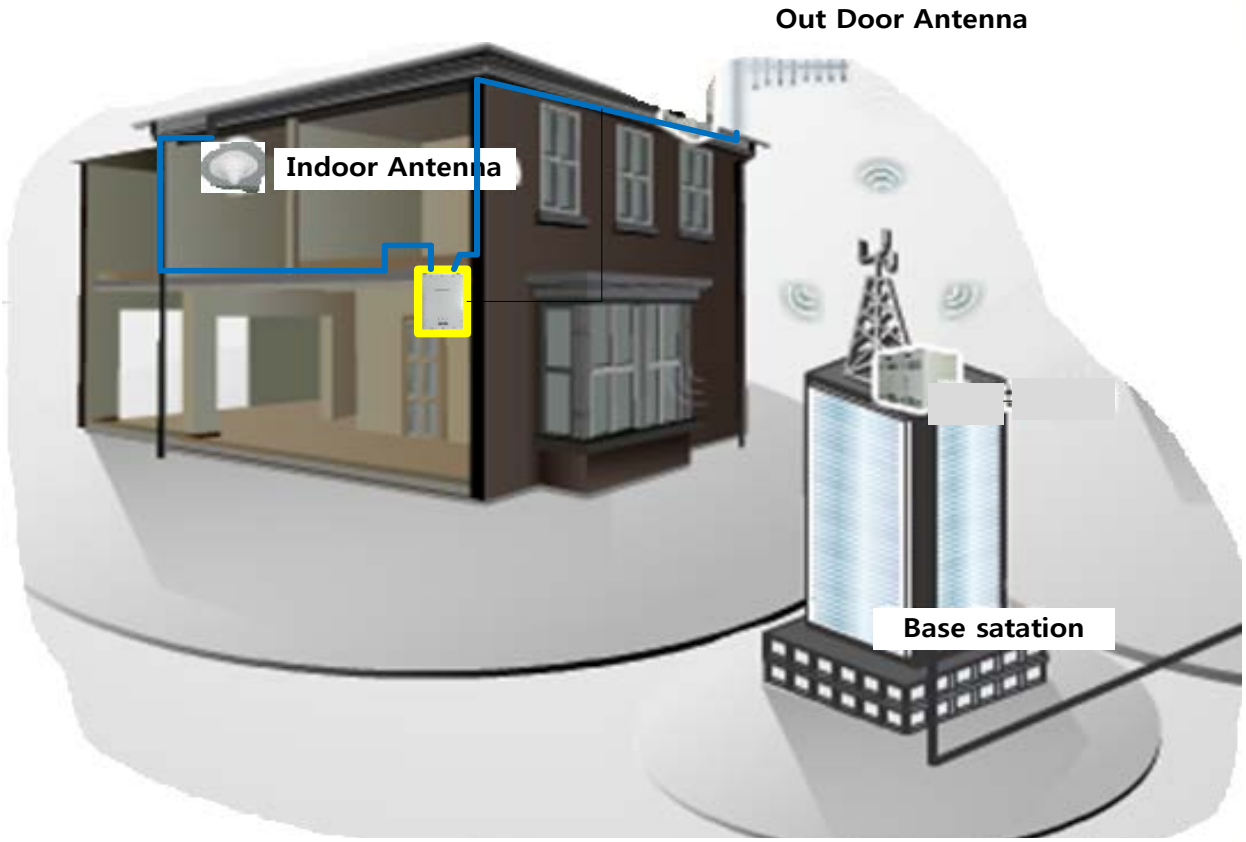

3.1.1. Install outdoor antenna on higher location to avoid any signal interference. Mount towards to the BTS where a clear line-of-sight path exists for optimal signal level.

3.1.2. Install indoor antenna at appropriate location such as wall or roof ceiling. Make sure service antenna is not blocked by furniture or appliances.

3.1.3. Use enclosed bolt to fix a booster on the wall and plug in power adaptor.

3.1.4. For best optimal operation, antenna isolation (oscillation level) should be set above minimum 15 dB gain. The industry standard for antenna to antenna isolation formula is BDA gain + 15 dB.

3.2 One Outdoor Antenna & One Indoor Antenna Installation

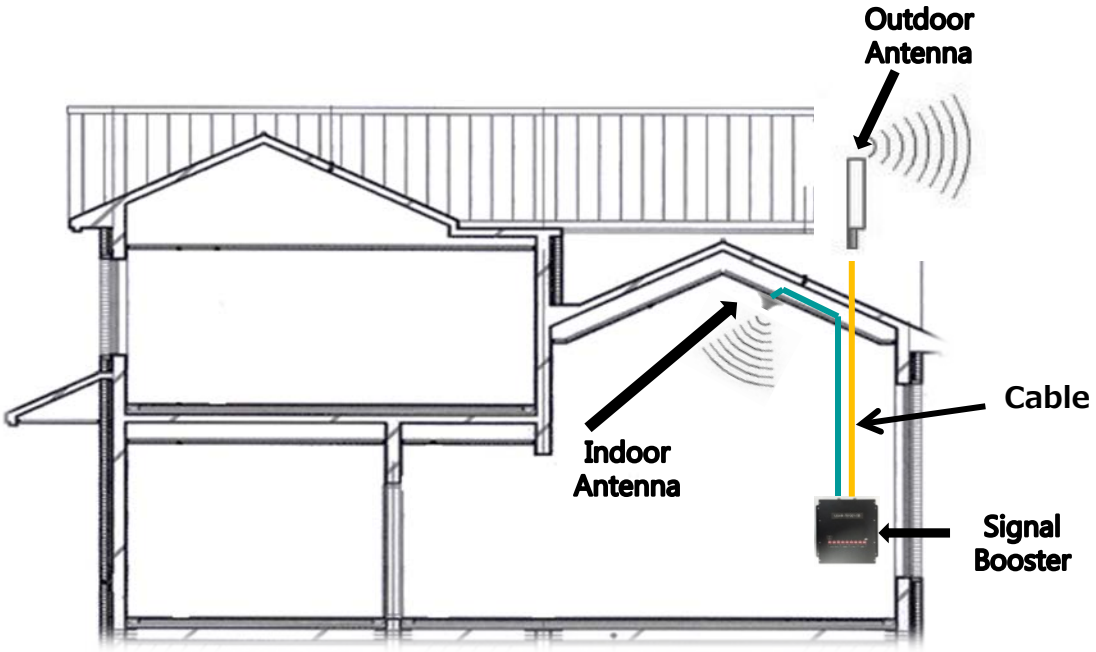

Item	Model	Q'ty	Instruction
Outdoor Antenna	TS220971	1	Install toward to cell tower Waterproof connectors connection
Indoor Antenna	TS260771	1	Install indoor antenna opposite direction to outdoor antenna
Signal Booster	USHR-781921-5B	1	Install on hard wall with bracket and screws
Outdoor Cable	TS350000	1	Fasten connection between antenna and cable connector
Indoor Cable	TS320000	1	Fasten connection between antenna and cable connector
AC/DC Adaptor	SAMA-02-600	1	Use only provided adaptor

3.3 One Outdoor Antenna & Two and More Indoor Antenna Installation

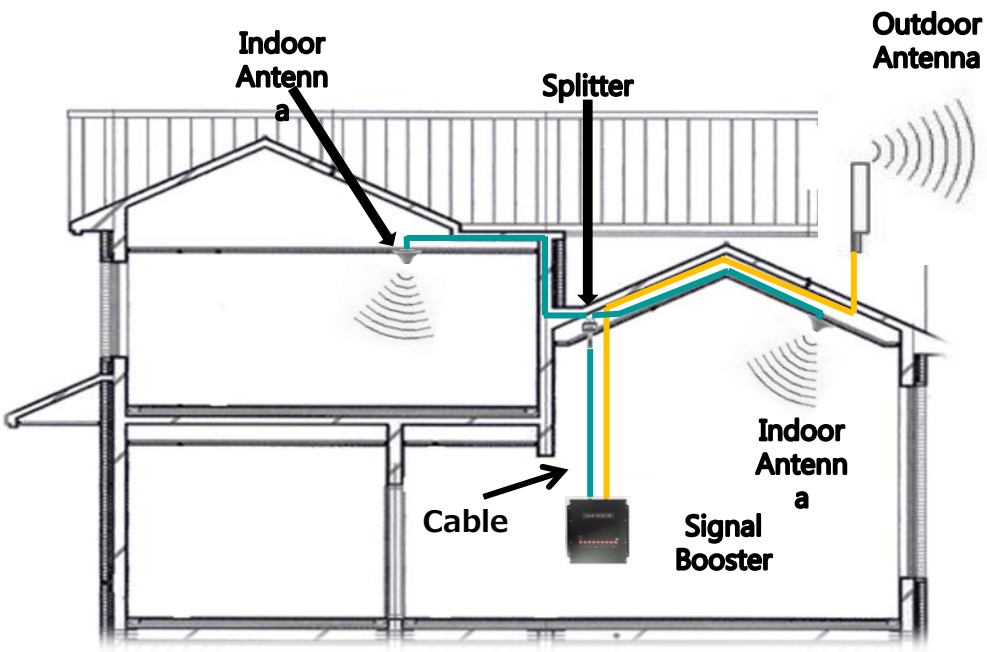

Item	Model	Q'ty	Instruction
Outdoor Antenna	TS220971	1	Install toward to cell tower Waterproof connectors connection
Indoor Antenna	TQI-700/2700-SJ-01	2(N)	Install indoor antenna opposite direction to outdoor antenna
N-way Splitter	Option	1	Divide two antennas and fasten connection between antenna and splitter
Signal Booster	USHR-781921-5B	1	Install on hard wall with bracket and screws
Outdoor Cable	TS360000	1	Fasten connection between antenna and cable connector
Indoor Cable	TS340000	3(N+1)	Fasten connection between antenna and cable connector
AC/DC Adaptor	SAWA-02-600	1	Use only provided adaptor

3.4 Installation Details

3.4.1 Outdoor Antenna Installation

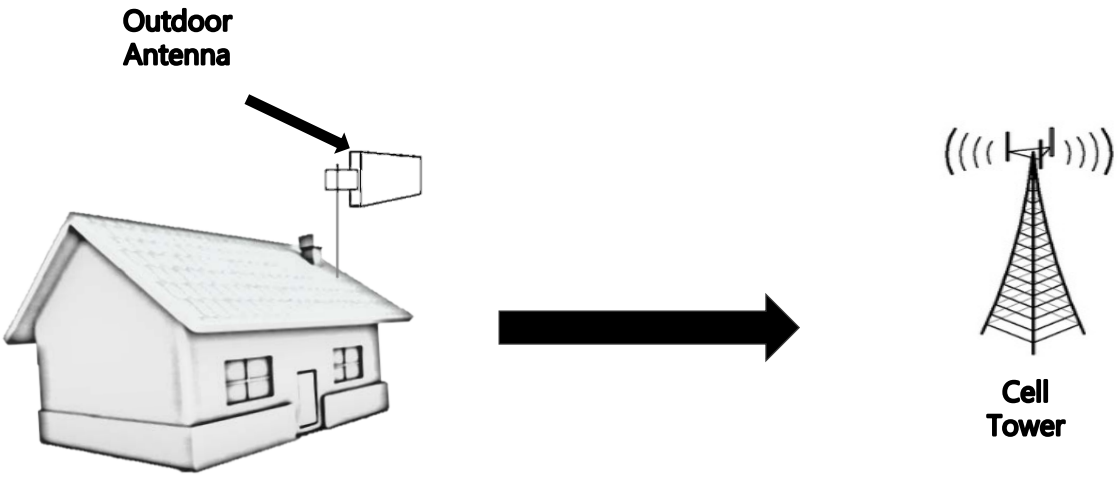

the antenna for the device must be installed to comply with the 10 meter above ground maximum antenna height limitation .

a) Choose a location to installation where minimum heat and good ventilation area.

b) Install outdoor antenna toward Cell Tower on the roof of building or high area where signal reception is optimized.

c) If you don't know where a cell tower is, install the system and find strongest direction with your cellular phone signal and then adjust outdoor antenna.

d) Run the cable to signal booster and connect to outdoor antenna.

e) Run the cable to indoor antenna to signal booster and choose a location for indoor antenna.

f) Use the bracket to attach to a firm wall. A minimum distance from indoor to outdoor antenna must be at least 20 vertical feet and 50 horizontal feet each other.

g) Turn on power as all connections are tightly finished.

h) As the green light are on, you will get better signal.

3.4.2 Booster Installation

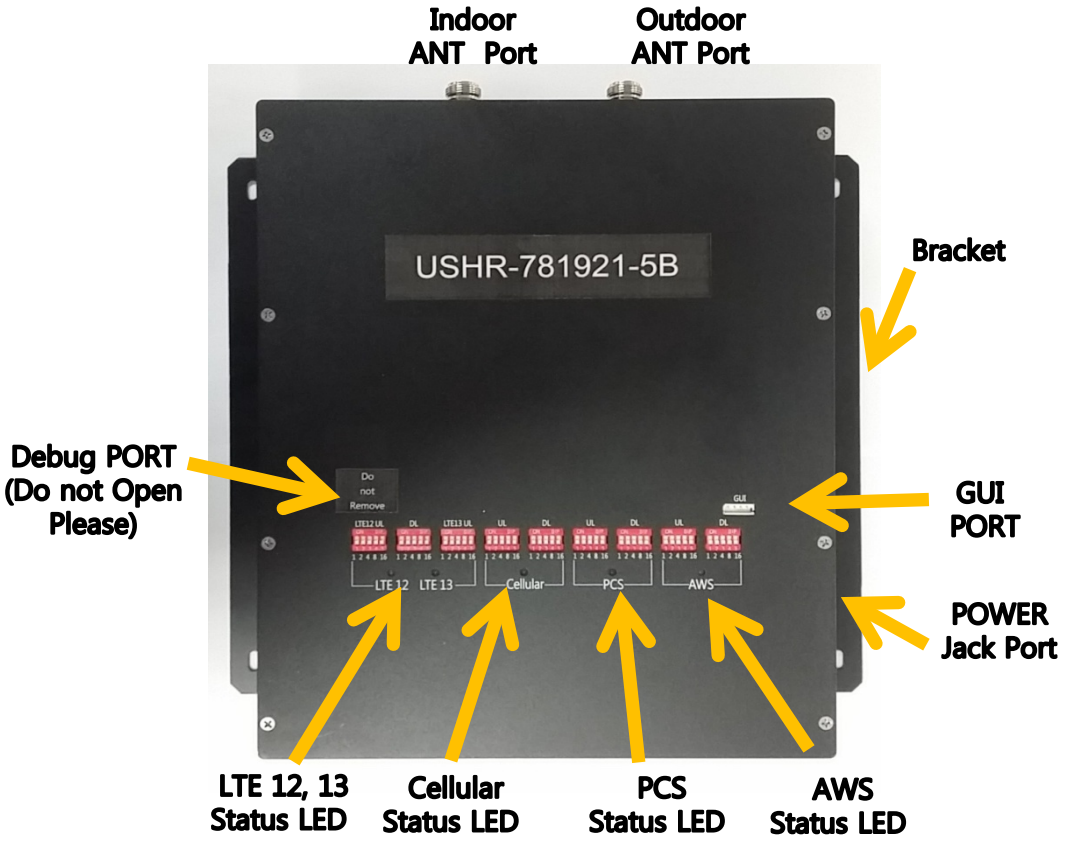

Item		Q'ty	Instruction
Indoor ANT Port	N-Type	1	Indoor antenna connector
Outdoor ANT Port	N-Type	1	Outdoor antenna connector
Bracket	4 Hole	2	Use for wall mount with 4 screws
Adaptor DC IN	-	1	Adaptor for DC connection Plug in after all connection is finished
LED	Tri-color	5	See page 17
GUI Port	-	1	Graphic user interface(Professional use only)
Debug Port	-	1	Professional use only

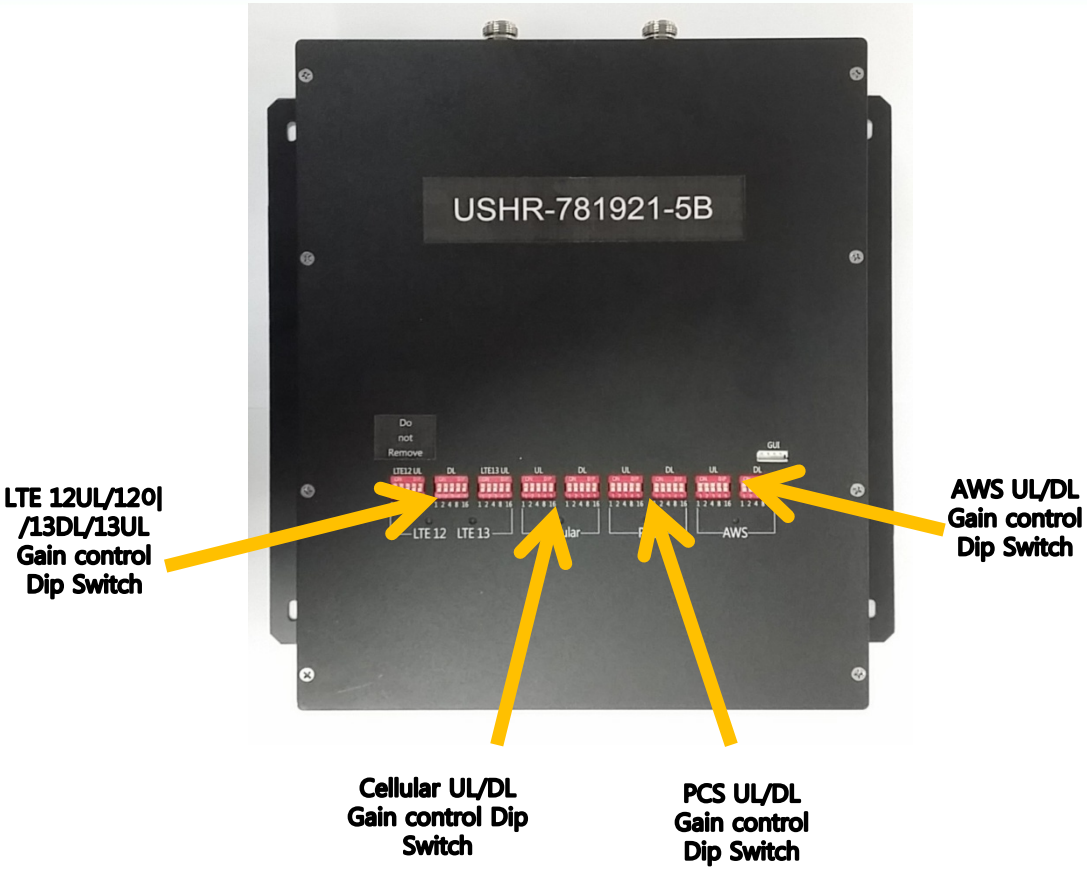

① This booster designed to automatic installation function and you may only follow instruction manual.

② Dip switch control refers the following table. In order to use dip switch, the dip switch control function must be enabled by useing GUI in advance. The default setting of dip switch is OFF.

③ Dip switch must be managed and operated by professional an installer only. Please ask professional installers, distributors and dealers to adjust dip switch.

Attenuation State	SW1	SW2	SW4	SW8	SW16
1 dB	↑	↓	↓	↓	↓
2 dB	↓	↑	↓	↓	↓
4 dB	↓	↓	↑	↓	↓
8 dB	↓	↓	↓	↑	↓
16 dB	↓	↓	↓	↓	↑

※ Switch setting is cumulative. This means the total amount of attenuation.

3.4.3 Booster and Antenna connection

3.4.3.1. Connect donor antenna cable to outdoor antenna port as shown below.

3.4.3.2. Connect Service antenna to indoor antenna port as shown below.

3.4.3.3. Plug in power adaptor to power outlet.

3.4.3.4. Plug in AD/DC adaptor to connector listed as DC12V

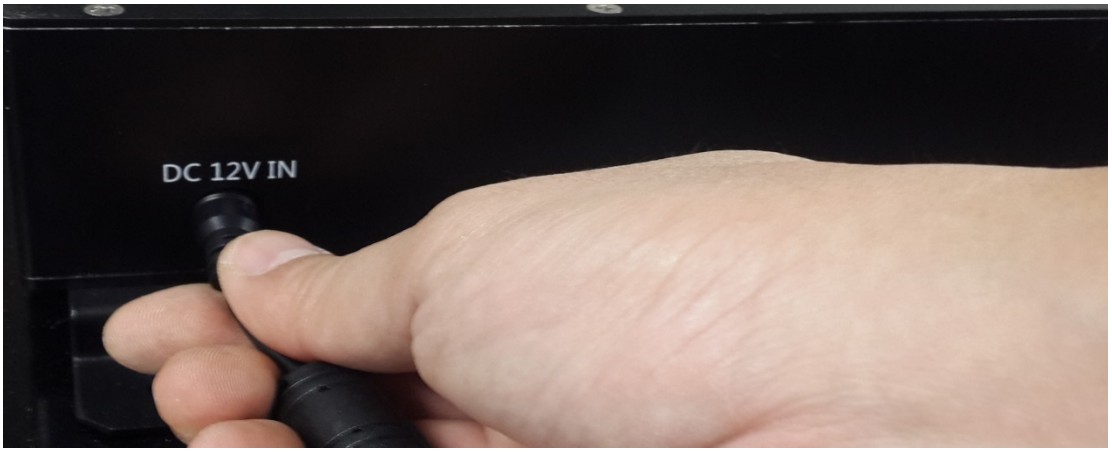

3.4.3.5. The factory default set-up has both Automatic Attenuator Control & Automatic Level Control (ALC) pre-activated by USHR-781921-5B Internal CPU. All Isolation Check features can be manually adjusted via dip switch using GUI program (Booster Control & Monitoring Software).

4. Trouble Shooting

Item	GREEN LED	RED LED	Reference
PWR	ON	×	See 4.1.1
	OFF	×	See 4.1.1
ALL Band	ON	-	See 4.1.2
	-	ON	See 4.1.3
	Green Blinking per 1 sec cycle	-	See 4.1.4
	Green Blinking per 5 sec cycle	-	See 4.1.5
	-	RED Blinking per 1 sec cycle	See 4.1.6
		RED Blinking per 5 sec cycle	See 4.1.7

4.1.1. Power on /off status.

4.1.2. Normal operation condition.

4.1.3. Booster detects excessive input signal and shut down.

4.1.4 Shutdown Algorithm status on High input Signal.

4.1.5. Path OFF indicator during Uplink Sleep Mode.

4.1.6. Isolation Shutdown Algorithm status

4.1.7. Booster detects Insufficient Isolation between donor & service antenna and shut down.

5. Specifications

5.1. Electrical Specifications

Item		Specifications	Note
Frequency Range	Up Link	698 ~ 716 MHz	BAND12
	Down Link	728 MHz ~ 757MHz	BAND12 / BAND13
	Up Link	776 ~ 787 MHz	BAND 13
	Down Link	869~894 MHz	BAND 5
	Up Link	824 ~849 MHz	
	Down Link	2,110 ~ 2,155 MHz	BAND 4
	Up Link	1,710 ~ 1,755 MHz	
	Down Link	1,930 ~ 1,995 MHz	BAND 25
	Up Link	1,850 ~ 1,915 MHz	
Modulation Type	GSM. EDGE, CDMA, EVDO, HSPA, LTE		
Input Power limit	Down Link	-40dBm max	BAND12
	Up Link	-10dBm max	
	Down Link	-40dBm max	BAND13
	Up Link	-10dBm max	
	Down Link	-40dBm max	BAND 5
	Up Link	-10dBm max	
	Down Link	-40dBm max	BAND 4
	Up Link	-17dBm max	
	Down Link	-40dBm max	BAND 25
	Up Link	-17dBm max	
Output Power	Down Link	+2dBm@ booster output port	ALL DL Channel
	Up Link	+23dBm@ booster output port	ALL UL Channel
Gain(RSSI)	Up Link	30dB ~ 60dB (±1.0dB)	BAND 12
	Down Link	42dB ~ 60dB (±1.0dB)	BAND 12 / BAND 13
	Up Link	31dB ~ 61dB (±1.0dB)	BAND 13
	Down Link	42dB ~ 62dB (±1.0dB)	BAND 5
	Up Link	31dB ~ 61dB (±1.0dB)	
	Down Link	42dB ~ 70dB (±1.0dB)	BAND 4
	Up Link	38dB ~ 68dB (±1.0dB)	
	Down Link	42dB ~ 69dB (±1.0dB)	BAND 25
	Up Link	38dB ~ 68dB (±1.0dB)	
Gain(ALC)`	Up Link	33dB ~ 60dB (±1.0dB)	BAND 12
	Down Link	42dB ~ 60dB (±1.0dB)	BAND 12 / BAND 13
	Up Link	33dB ~ 61dB (±1.0dB)	BAND 13
	Down Link	42dB ~ 62dB (±1.0dB)	BAND 5
	Up Link	33dB ~ 61dB (±1.0dB)	
	Down Link	42dB ~ 70dB (±1.0dB)	BAND 4
	Up Link	40dB ~ 68dB (±1.0dB)	
	Down Link	42dB ~ 69dB (±1.0dB)	BAND 25
	Up Link	40dB ~ 68dB (±1.0dB)	

Item			Specifications		NOTE
Ripple	Down / Up Link		<8dB / < 8dB(Peak to Peak)		
Noise Figure	Down / Up Link		< 8.0dB / < 8.0dB		ALL BAND Max Gain
Noise Power Limit	Down Link		< -70dBm/MHz		On shutdown
	Up Link		< -70dBm/MHz		On shutdown & sleep mo de
	Down / Up Link		FCC		ALL BAND
	Down / Up Link		FCC		ALL BAND
Propagation Delay			< 3us		
Input VSWR			≤ 2.0 : 1		
ALC Setting Level	Down Link(Upper Value)		+2dBm±1.0dB		
	Window Size(Lower Offset)		1 ~ 10dB(Default : 2dB)		
	Up Link (Upper Value)		+23dBm±1.0dB		
	Window Size(Lower Offset)		1 ~ 10dB(Default : 2dB)		
ALC Range	Down / Up Link		DL ≤ 18dB	UL ≤ 27dB	Band 12
	Down / Up Link		DL ≤ 18dB	UL ≤ 28dB	BAND 13
	Down / Up Link		DL ≤ 20dB	UL ≤ 28dB	BAND 5
	Down / Up Link		DL ≤ 28dB	UL ≤ 28dB	BAND 4
	Down / Up Link		DL ≤ 27dB	UL ≤ 28dB	BAND 25
Shutdown Level	Down Link		≥-40dBm/Total±1.0dB		ALL Down Link
	Up Link		≥-10dBm/Total±1.0dB		Band12, Band13, Band 5
	Up Link		≥-17dBm/Total±1.0dB		Band 4, Band 25
OSC Level	Down Link		DL detects OSC under 1 sec.		
	Up Link		UL detects OSC under 0.3 sec.		
Uplink In-activity	Up link		On@ > -88dBm, OFF@ < -90dBm		- No uplink signal for 5 minutes
Gain Control Range	Dip Switch	Down link	0dB ~ 30dB / 1dB Step		- Be controlled GUI or Dip Switch - Total Atten Control Range : 0dB ~ 30dB / 1dB Step
		Up link	0dB ~ 30dB / 1dB Step		
Gain Control Deviation			< ± 1dB		
EVM			< 7%		No Feedback
Isolation checking Range			30dB ~ 75dB / BAND12		Detecting deviation: < ±2 .0dB
			31dB ~ 76dB / BAND13		
			31dB ~ 76dB / BAND 5		
			38dB ~ 83dB / BAND 4		
			38dB ~ 83dB / BAND 25		
Out Band Spurious			< -13dBm/1kHz RBW		9kHz ~ 150kHz
			< -13dBm/10kHz RBW		150kHz ~ 30MHz
			< -13dBm/100kHz RBW		30MHz ~ 1GHz
			< -13dBm/1MHz RBW		1GHz ~ 12.75GHz
3rd IMD Level			< -19dBm		Max Output Level
Frequency Stability			≤ ±0.01ppm		

ITEM		Specifications		NOTE
GUI Interface		RS-232C		
Alarm & Status	Display	PWR	▪ Normal: Green ▪ Power turn off: Off	
		Alarm	▪ Normal: Green ▪ Over Power Shutdown: RED ▪ Checking SD: Green Blinking per 1 sec cycle ▪ Checking OSC Algorithm: Red Blinking per 1 sec cycle ▪ Sleep Mode: Green Blinking per 5 sec cycle ▪ Isolation SD : RED Blinking per 5 sec cycle	
Power Consumption		< 50W		
Operating Power		AC/DC Adapter (AC110V or AC220V)		
RF Connector		N-type Female		

● Additional Information:

This booster is a bi-directional amplifier for the boosting of cellular phone signals and data communication devices.
The following frequency bands and emission types are utilized.

Frequency Band		
Band	**DL**	**UL**
Band 12 & Band 13	728 ~ 757 MHz	698 ~ 716 MHz
		776 ~ 787 MHz
Band 5	869 ~ 894 MHz	824 ~ 849 MHz
Band 4	2110 ~ 2155 MHz	1710 ~ 1755 MHz
Band 25	1930 ~ 1995 MHz	1850 ~ 1915 MHz

Emission Designators					
CDMA	HSPA	LTE	EVDO	EDGE	GSM
F9W	F9W	G7D	F9W	G7W	GXW

5.2. Mechanical Specification

Item	Specifications	Note
Dimensions (L × W × H)	231mm x 288mm x 71mm	Except Bracket and Connector (Tolerance ±5mm)
Weight	< 6.8Kg	

5.3. Environment Specification

Item	Specifications	Note
Temperature	-30 ~ 55℃ (-22 ~ 131℉)	
Humidity	10 ~ 95%	

5.4. AC/DC Adaptor Specification

Items	Specifications	Note
AC input power	90VAC ~ 264VAC, 47Hz ~ 63Hz	
Output Voltage	+12.0 VDC	
Current Range	6.0A ~ 0.0 A	
Operation Temperature	-30℃ ~ +55℃	
Operation humidity	10% ~ 90%	

6. Certificates

6.1 FCC Certification

Model : USHR-781921-5B

- **Certificate Data :**
- **Certificate Number :**

6.2 IC Certification

Model : USHR-781921-5B

- **Certificate Data :**
- **Certificate Number :**

7. Contact Information

7.1 Location

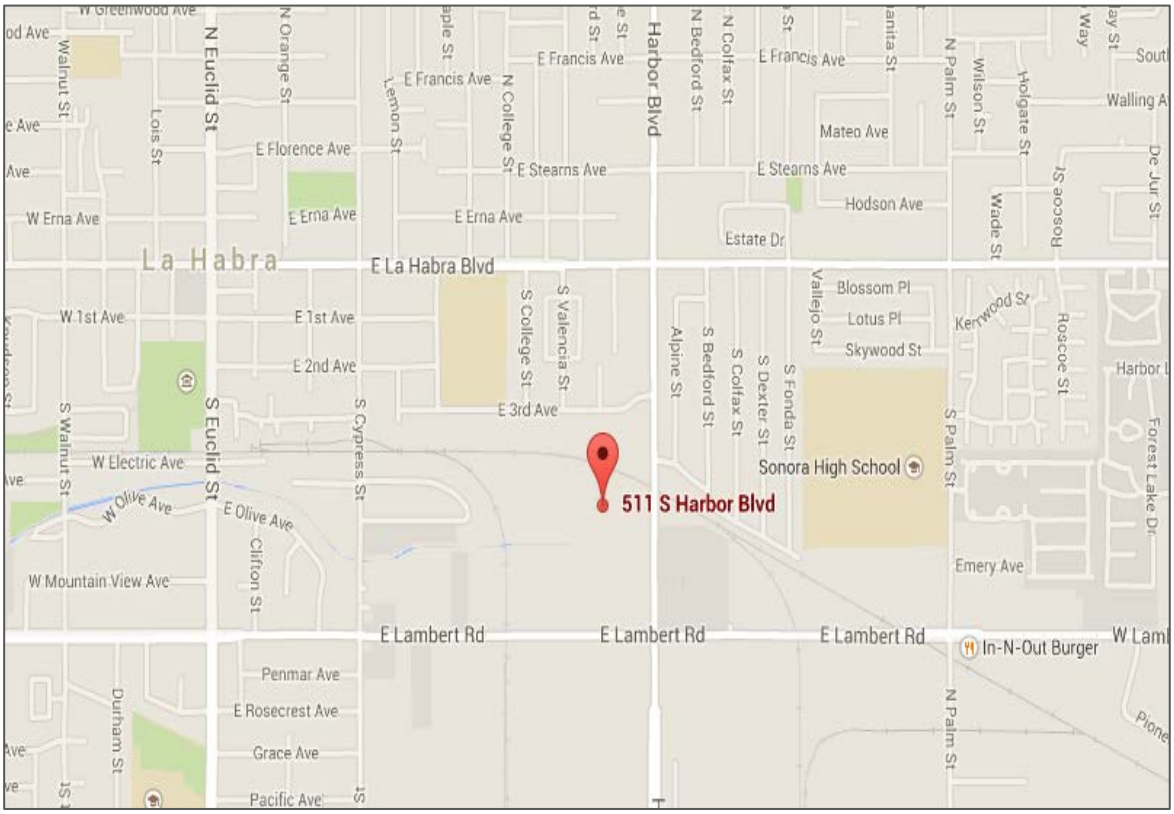

7.2 Contact

Address : 511 s. HARBOR BLVD STEP. LAHABRA, CA 90631
Mon.-Fri. Hours : 9 a.m. to 5 p.m.

TEL : 562-448-3102
FAX : 562-448-3105

Memo