TM181 ... SXGA

Color TFT-LCD Monitor

User’ s Manual

TM181

Color TFT-LCD Monitor

Notes On LCD Monitors

1.The LCD panel used in this monitor is a very high technology product with 3,932,160 thin film transistors, giving you fine picture details. Occasionally, a few non-active pixels may appear on the screen as a fixed point of red, green, blue, white or black. Please note that this does not indicate a defective panel.

2. Set your resolution to 1280 x 1024 pixels at 60Hz refresh rate for optimum display quality.

3. Due to the nature of the LCD screen, an afterimage of the previous screen may remain after switching the image when the same image has been displayed for a long time. The monitor will slowly recover from this.

4. The screen surface is very soft. Do not rub, touch or tap the screen surface with sharp object such as pen or pencil. This contact may scratch or damage the screen. These damages are not covered under the warranty.

TM181

Color TFT-LCD Monitor

OPERATION MANUAL

CONTENTS

SAFETY PRECAUTIONS ……4,5

SUPPLIED ACCESSORIES ……6

PREPARATION

Remote Control ……7

TV Tuner ……8

Cable Connection ……9

Stand, Arm, Wall Mount ……10

LOCATION OF USERS CONTROL ..11

REMOTE CONTROL ……12

MONITOR INSTALLATION . …..13,14,15

STATUS INFORMATION ……16

OSD USAGE …. … ……17,18,19

BEFORE CALLING FOR REPAIR SERVICE …..20

SPECIFICATIONS

TM181 …… ……21

Available PC VGA Mode ……22

WARRANTY STATEMENT … ……23,24

FCC & ENERGY STAR® STATEMENTS ...25

HOW TO CONTACT US ……26

Appendix

V-Chip …… …..27,28

SAFETY PRECAUTIONS

Improper use can result in electric shock and/or fire. In order to prevent potential danger, please observe the following instructions when installing, operating and cleaning the product. To ensure your safety and prolong the service life of your color TFT-LCD monitor product, please read the following precautions carefully before using the product.

- All operating instructions must be read and understood before the product is operated.
- These safety and operating instructions must be kept in safe place for future reference.
- All warnings on the product and in the instructions must be observed closely.
- All operating instructions must be followed.
- Do not use attachments not recommended by the manufacturer. Use of inadequate attachments can result in accidents.
- This product must be operated on a power source specified on the specification label. If you are not sure of the type of power supply used in your home, consult your dealer or local power company. For units designed to operate on batteries or another power source, refer to the operating instructions.
- The power cords must be routed properly to prevent people from stepping on them or objects from resting on them. Check the cords at the plugs and product.
- If you plan to use a 12V DC power supply unit other than the AC adapter supplied with the product, make sure the power supply unit provides stable voltage with minimum fluctuations.
- Do not overload AC outlets or extension cords. Overloading can cause fire or electric shock.
- Never insert an object into the product through vents or openings. High voltage flows in the product, and inserting an object can cause electric shock and/or short internal parts. For the same reason, do not spill water or liquid on the product.
- Do not attempt to service the product yourself. Removing covers can expose you to high voltage and other dangerous conditions. Request a qualified service person to perform servicing.
- If any of the following conditions occurs, unplug the power cord from the AC outlet, and request a qualified service person to perform repairs.
  a. When the power cord or plug in damaged.
  b. When a liquid was spilled on the product or when objects have fallen into the product.
  c. When the product has been exposed to rain or water.
  d. When the product does not operate properly as described in the operating instructions. Do not touch the controls other than those described in the operating instructions. Improper adjustment of controls not described in the instructions can cause damage, which often requires extensive adjustment work by a qualified technician.
  e. When the product has been dropped or damaged.
  f. When the product displays an abnormal condition. Any noticeable abnormality in the product indicates that the product needs servicing.
- In case the product needs replacement parts, make sure that the service person uses replacement parts specified by the manufacturer, or those with the same characteristics and performance as the original parts. Use of unauthorized parts can result in fire, electric shock and/or other danger.
- Upon completion of service or repair work, request the service technician to perform safety checks to ensure that the product is in proper operating condition.
- When mounting the product on a wall or ceiling, be sure to install the product according to the method recommended by the manufacturer.

SAFETY PRECAUTIONS (Continued)

- Unplug the power cord from the AC outlet before cleaning the product. Use a damp cloth to clean the product. Do not use liquid cleaners or aerosol cleaners.
- Unplug the power cord from the AC outlet if you do not use the product for considerably long time.
- Do not use the product near water, such as bathtub, washbasin, kitchen sink and laundry tub, swimming pool and in a wet basement.
- Keep the product away from direct rays of the Sun-light.
- Do not place the product on an unstable cart, stand, tripod or table. Placing the product on an unstable base can cause the product to fall, resulting in serious personal injuries as well as damage to the product. Use only a cart, stand, tripod, bracket or table recommended by the manufacturer or sold with the product. When mounting the product on a wall, be sure to follow the manufacturer's instruction. Use only the mounting hardware recommended by the manufacturer.
- When relocating the product placed on a cart, it must be moved with the utmost care. Sudden stops, excessive force and uneven floor surface can cause the product to fall from the cart.
- The vents and other openings in the cabinet are designed for ventilation. Do not cover or block these vents and openings since insufficient ventilation can cause overheating and/or shorten the life of the product. Do not place the product on a bed, sofa, rug or other similar surface, since they can block ventilation openings. This product is not designed for built-in installation; do not place the product in an enclosed place such as a bookcase or rack, unless proper ventilation is provided or the manufacturer's instructions are followed.
- The LCD panel used in this product is made of glass. Therefore, it can break when the product is dropped or applied with impact. Be careful not to be injured by broken glass pieces in case the LCD panel breaks.
- Keep the product away from heat sources such as radiators, heaters, stoves and other heat-generating products (including amplifiers).

SUPPLIED ACCESSORIES

Make sure the following accessories are provided with the product.

 Quick Start Guide (*1)	 Operation Manual Monitor Driver (CD*1)
 Remote Control (*1)	 Size AAA Battery (*2)
 DC Adapter (*1)	 AC Cord (*1)
 PC VGA Cable(*1)	 TV Tuner(*1) (Option)
 PC Stereo Cable (x1)	

PREPARATION - Remote Control

■ Use the remote control by pointing it towards the remote sensor window.
Objects between the remote control and sensor window may prevent proper operation.

⚠Cautions regarding use of remote control

■ Do not expose the remote control to shock. In addition, do not expose the remote control to liquids, and do not place in an area with high humidity.
■ Do not install or place the remote control under direct sunlight. The heat may cause deformation of the unit.
■ The remote control may not work properly if the remote sensor window of the main unit is under direct sunlight or strong lighting. In such case, change the angle of the lighting or LCD TV monitor set, or operate the remote control closer to the remote sensor window.

Batteries for Remote Control

If the remote control fails to operate LCD TV monitor functions, replace the batteries in the remote control.

1 Open the battery cover.

2 Insert batteries (two Size-AAA batteries, Supplied with product).

■ Place batteries with their terminals corresponding to the (+) and (-) indications in the battery compartment.

3 Close the battery cover

⚠Cautions regarding batteries

Improper use of batteries can result in a leakage of chemicals and/or explosion. Be sure to follow the instructions below.

- Place batteries with their terminals corresponding to the (+) and (-) indications.
- Different types of batteries have different characteristics. Do not mix batteries of different types.
- Do not mix old and new batteries. Mixing old and new batteries can shorten the life of new batteries and/or cause old batteries to leak chemicals.
- Remove batteries as soon as they are non-operable. Chemicals that leak from batteries can cause a rash. If chemical leakage is found, wipe with a cloth.
- The batteries supplied with the product may have a shorter life expectancy due to storage conditions.
- If the remote control is not used for an extended period of time remove batteries from the remote control

PREPARATION – TV Tuner

TV Tuner Installation

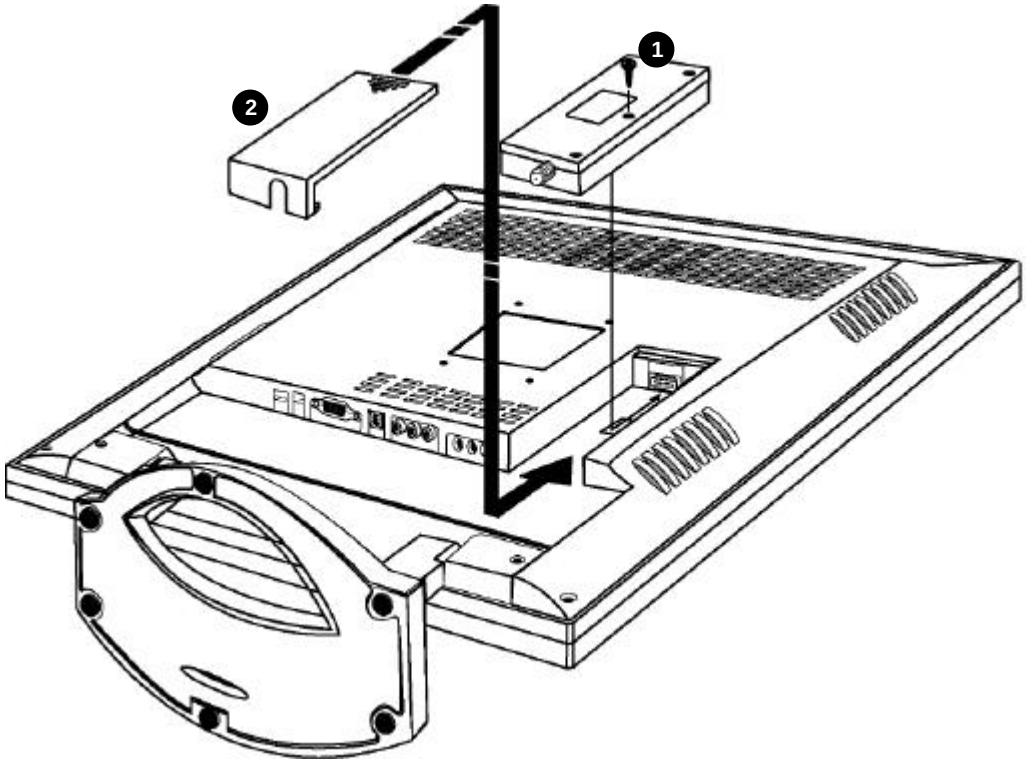

Note :1) For your convenience, the TV Tuner module has been installed at the factory.
The illustration is shown for your reference only.

2) In case of re-installing(or uninstalling) the tuner, follow the following steps.

① Screw the bolt.

② Cover the tuner with the tuner cover.
(In case of uninstalling, proceed the step in reverse.)

PREPARATION – Cable Connection

Cable Connector Description

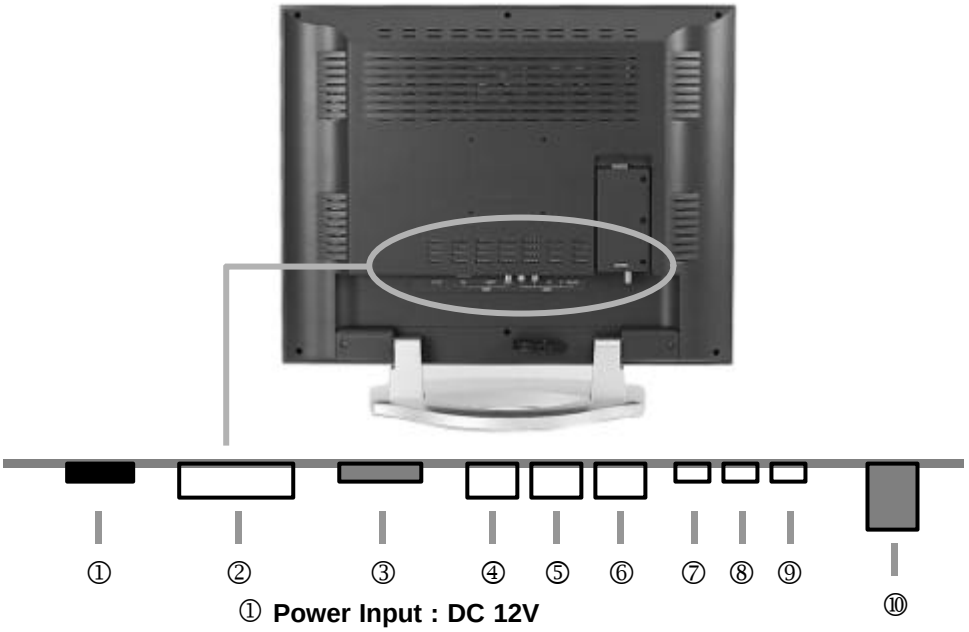

① **Power Input : DC 12V**
② **Analog RGB : PC VGA Cable**
③ **S-Video**
④ **Composite Video : Yellow**
⑤ **Video Sound (L) : White**
⑥ **Video Sound (R) : Red**
⑦ **PC Stereo Input**
⑧ **Headphone Output**
⑨ **Line Out : Connect to another speaker set**
⑩ **Antenna**

VGA, Power & Antenna Cable Connection

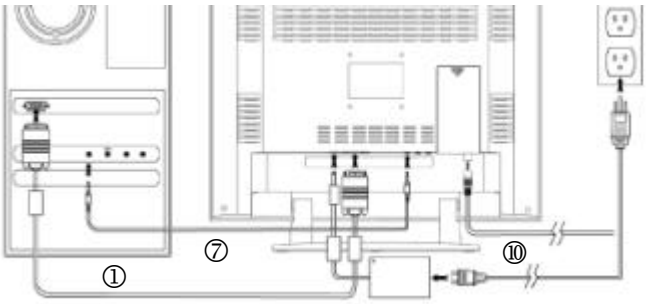

PREPARATION- Stand, Arm, Wall Mount

Stand Installation (Standard)

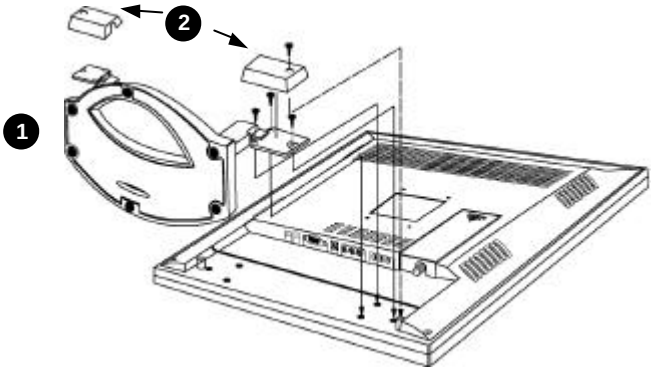

Arm Installation

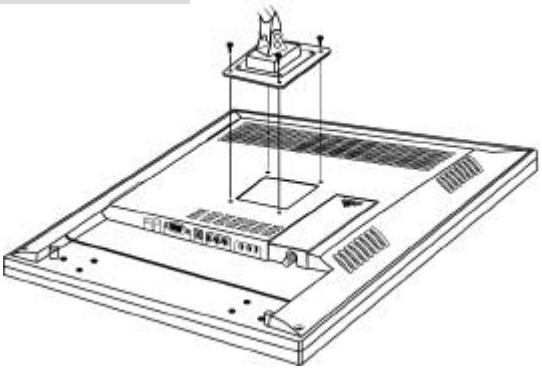

Wall Mount Bracket Installation

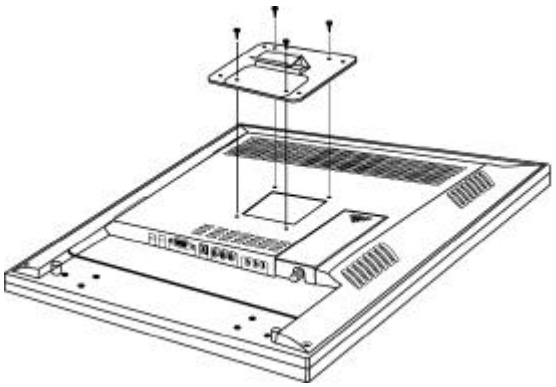

Note : Arm and wall mount bracket are not supplied with the product.

LOCATION OF CONTROL PANEL

Control Panel on the front of main unit

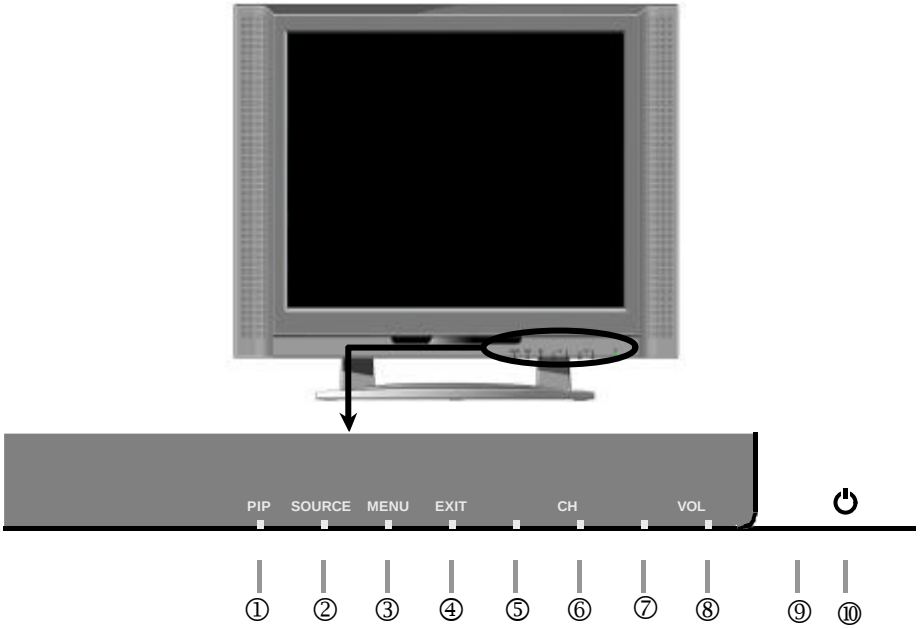

① **PIP : Activate PIP menu window.**

② **Signal Source Select : Signal source will be selected in sequence as the button is pressed.**

③ **Menu : Display the menu window and used as Select button.**

④ **Exit : Return to previous OSD menu or exit from OSD menu window.**

⑤ **Channel down / Move down : Channel down or move downward in OSD menu.**

⑥ **Channel up / Move up : Channel up or move upward in OSD menu.**

⑦ **Decrease volume / Move left : Volume down or move leftward in OSD menu.**

⑧ **Increase volume / Move right : Volume up or move rightward in OSD menu.**

⑨ **Power Indicator :**

Mode	LED Display	Remark
Power on	Green LED	-
Power off	Orange LED	No Signal (PC mode)
Switch Off	Dark LED	-

⑩ **Power On / Off**

REMOTE CONTROL

Remote Control

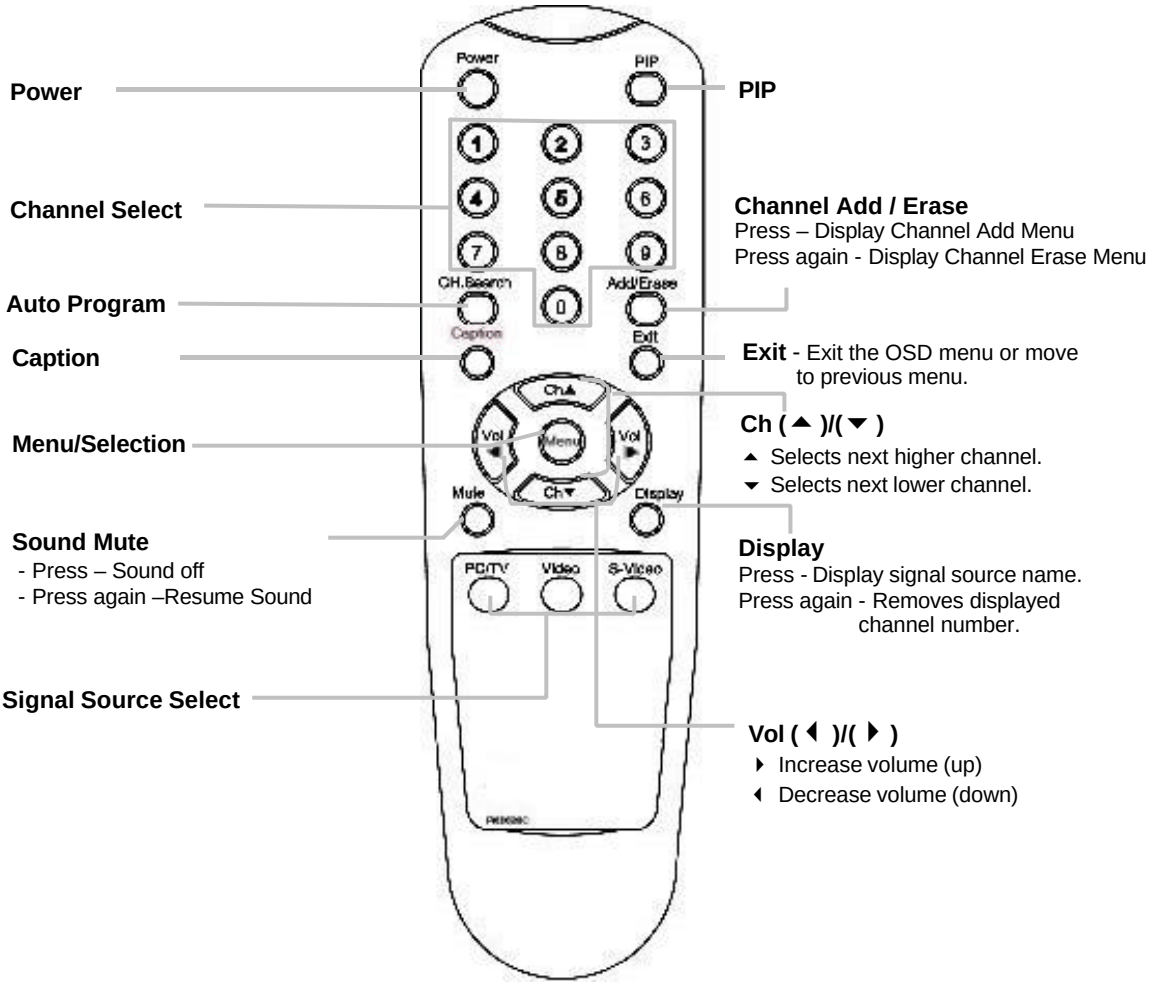

MONITOR INSTALLATION

1 Double click **[Control Panel]** icon from [My Computer] folder.

2 Double click **[Display]** icon from [Control Panel] folder.

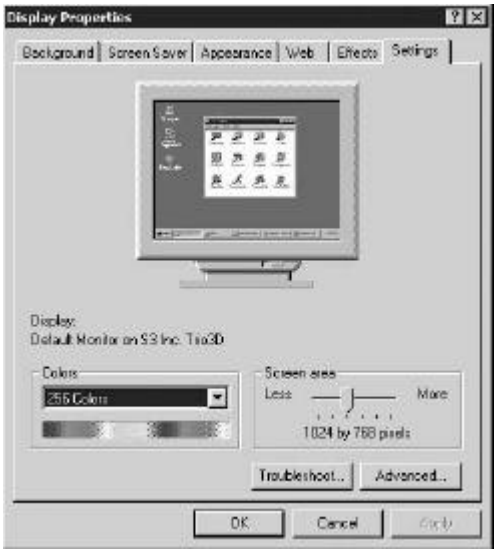

3 Select **[Settings]** in [Display Properties] window.

4 Click **[Advanced...]**.

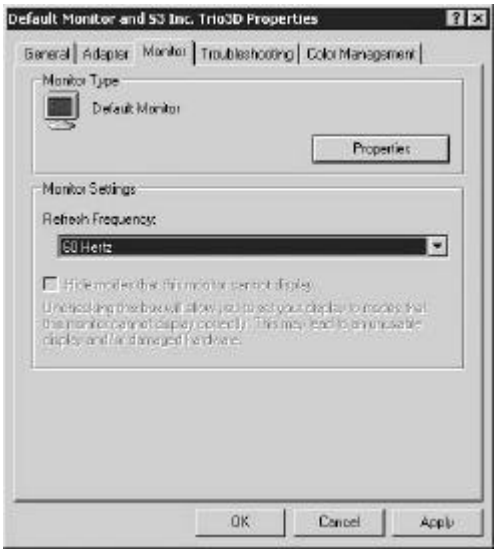

5 Select **[Monitor]** in the window shown above.

6 Click **[Properties]**.

MONITOR INSTALLATION(Continued)

7 Select **[Driver]** and then click **[Update Driver...]**.

8 **[Upgrade Device Driver Wizard]** will be appeared. Select the **second list** and then click **[Next>]**.

9 Click **[Have Disk...]**.

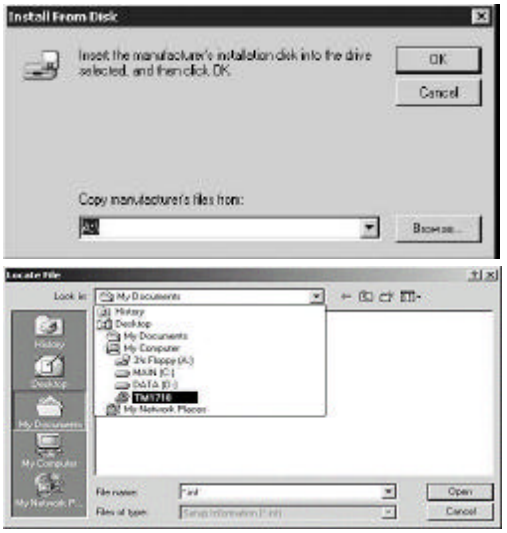

10 When drive **[A:]** appears in default, click **[Browse ..]** to select CD-ROM drive.

MONITOR INSTALLATION(Continued)

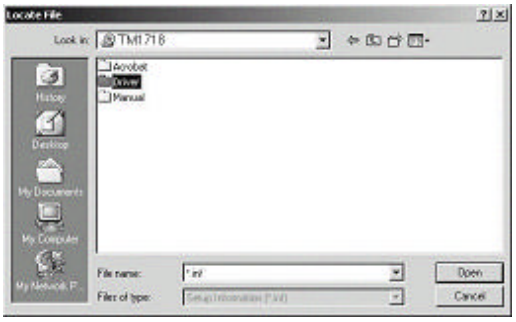

11 Double click the **[Driver]** folder.

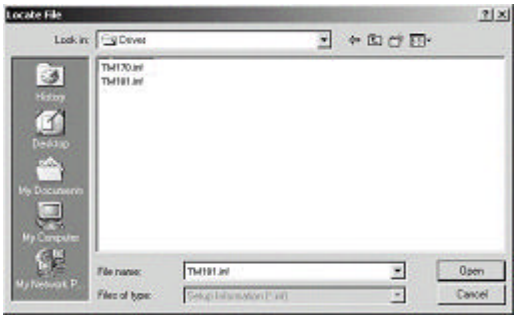

12 Choose **TM181.inf** file then click **[Open].**

13 Click **[OK]** to proceed to the next step.

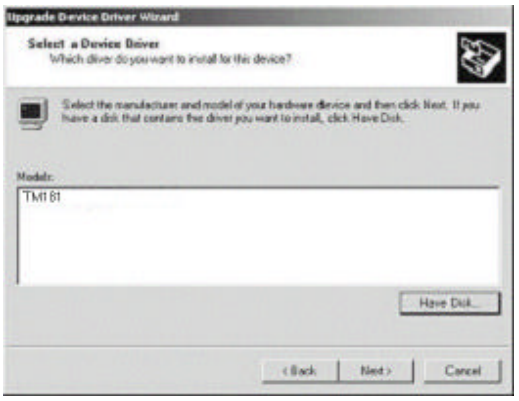

14 Choose **TM181**, then click **[Next>]** to proceed to the next step.

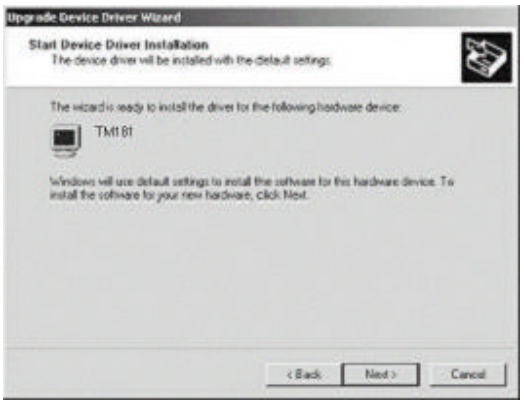

15 Click **[Next>]** to start installation.

16 Click **[Finish].**
(Be sure the screen shows correct model name.)

STATUS INFORMATION

Status Infomation

OSD Menu (Press “Menu” button on Control panel or Remote Control)

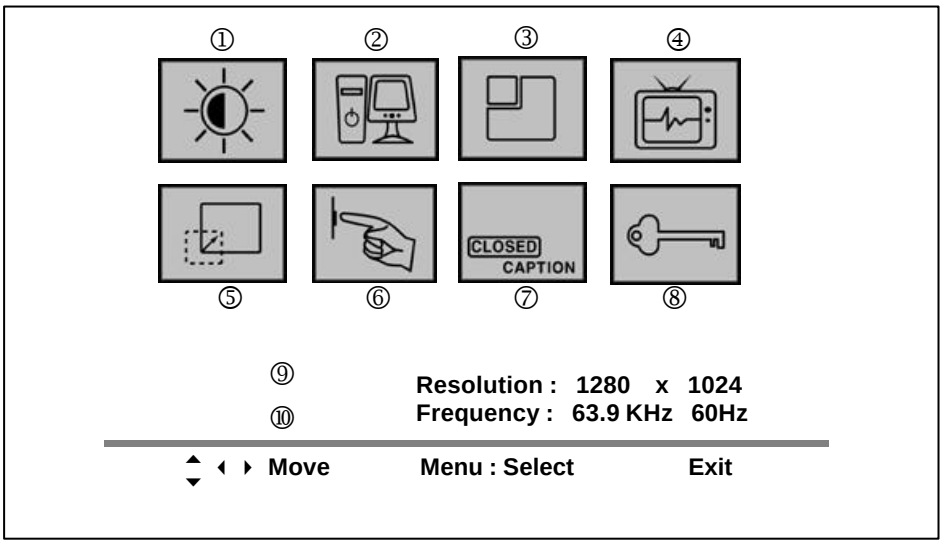

① **Video**

② **PC**

③ **PIP**

④ **TV**

⑤ **Scaling**

⑥ **Setup**

⑦ **Closed Caption**

⑧ **V-Chip**

⑨ **Number of horizontal and vertical pixels**

⑩ **Horizontal and vertical frequency**

OSD USAGE

Main Menu	Sub Menu	Operation
Video Available Mode ■ PC ■ TV ■ Video ■ S-Video	Brightness	◀ Button : Decrease Brightness ▶ Button : Increase Brightness
	Contrast	■ Contrast is ratio of luminance between black and white. ■ When contrast is reduced(◀ button), the luminance of white is reduced and the display becomes darker. ■ When contrast is increased(▶ button), the luminance of black is increased and the display becomes hazy. ◀ Button : Decrease Contrast Normal ▶ Button : Increase Contrast W B W B W B
	Sharpness	■ Adjust the clearness of image by controlling its sharpness.
	Color Control	■ Cold : Greenish white. Felt cold. ■ Normal : Normal white ■ Warm : Reddish white. Felt warm. ■ Custom : Able to adjust the color by controlling Red, Green, and Blue
	Color	◀ Button : Lower color intensity ▶ Button : Higher color intensity **Note : Available in Video/TV mode only**
	Tint	◀ Button : Toward green ▶ Button : Toward purple **Note : Available in Video/TV mode only**
PC Available Mode PC	Auto Adjustment	■ "Auto Adjustment" performs adjustment of image quality automatically. ■ Automatically adjusted items are : 1) Clock 2) Phase 3) Position is centered 4) Turning a zoomed picture into its normal shape (100%)
	Frequency	■ ◀ Button:Decrease horizontal size ▶ Button:Increase horizontal size. **⚠Caution** **Perform this adjustment just in the case of having horizontally unmatched picture after operating the "Auto".**
	Phase	■ When noise remains on the screen after operating the "Auto Adjust", adjust it by selecting ◀ or ▶ button. **⚠Caution** **Do not make manual adjustment when the picture is in its normal shape or you will create problem on it..**
	Position	◀ Button : Move left deo Vid ▶ Button : Move right ▼ Button : Move down Video Video ▲ Button : Move up

OSD USAGE (Continued)

Main Menu	Sub Menu	Operation
PIP Available Mode ■ PC	PIP	■ Select **On** to activate and **Off** to deactivate the PIP window. **Off / On** **Note: The channel(TV mode) and volume of PIP signal source can be controlled without OSD menu on.**
	Source	■ Select a source for PIP display - **Video / S-Video / TV**
	Position	■ Move the PIP window with ◄ ► ▲ ▼ buttons. Keep pressing the button enable the PIP window move continuously.
	Sound	■ Swap the sound source between PIP and PC.
TV Available Mode ■ TV	Channel System	■ Press ◄ or ► button to select a channel system. **ANT / CATV**
	Auto Prog.	■ Select **OK** to start auto program. **Note: To stop auto program, press Exit key.**
	Add/Erase	■ Select "Add" to add current channel to channel table, and select "Erase" to delete current channel from channel table. **Note:** Use ◄ ► buttons to select **Add or Erase.** **Add/Erase** button of remote control does the same function.
Scaling Available Mode ■ PC ■ TV ■ Video ■ S-Video	Scaling	■ **Normal** Display in normal format of pixels. For example, XGA(1024x768 pixels) will be displayed like the figure.(EN-7500 is SXGA product with 1280x1024 pixels.) 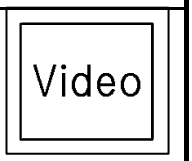 ■ **Aspect Ratio** Display in original aspect ratio of resolution. For example, XGA(4:3) will be displayed like the figure.(EN-7500 is SXGA product with 5:4 aspect ratio.) 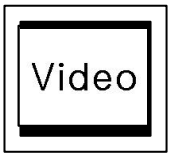
	Zoom	■ Able to zoom the screen by up to 64 times.
	Pan	■ Use ◄ ► button to adjust the horizontal position of Zoomed window. ■ Use ▲ ▼ button to adjust the vertical position of Zoomed window **Note:** Not possible to move normal screen.Just works in Zoomed window.

OSD USAGE (Continued)

Main Menu	Sub Menu	Operation
Setup Available Mode ■ PC ■ TV ■ Video ■ S-Video	Language	■ Select the language of OSD menu - **English / Français / Español / Deutsch**
	Position	■ Adjust the OSD position by using ◄ ► ▲ ▼ buttons.
	Timer	■ The range of controlling the duration time of the OSD menu is from 5 sec. up to 50 sec.
	Mute	■ Select **On** to off the sound and **Off** to resume the sound
Closed Caption (US Only) Availa ble Mode ■ TV ■ Video ■ S-Video	Caption	■ Select **On** to enable caption, and **Off** to disable caption.
	Mode	■ Select **Caption** or **Text** mode.
	Channel	■ Select "**1**" or "**2**".
	Field	■ Select "**1**" or "**2**".
V-Chip (US Only) Available Mode ■ TV ■ Video ■ S-Video	Refer to the page 27~28 for "V-Chip"	

BEFORE CALLING FOR REPAIR SERVICE ...

■ **Before calling for repair service, check the following items for possible remedies to the encountered symptoms.**

Problem	Check below	Reference Pages
There is no picture or sound (TV,Video,PC).	• Make sure the AC adapter is properly inserted in the power outlet. • Make sure the main power button of the main unit is on. • Make sure the signal cable is free of connections. • Make sure whether the power of an external input device is on. • Make sure the input mode is set to proper mode. • Fluorescent lamp may have reached the end of service life.	9 11 9 - 11 21
There is no sound (TV,Video PC).	• Make sure the volume is not set to minimum. • Make sure the sound is not set to mute. • Make sure the sound cable is free of connections.	11 12 9
There is no picture or sound, just noise(TV).	• Make sure the antenna cable is properly connected. • Bad reception can be considered.	9 -
Picture is not clear (TV).	• Make sure the antenna cable is properly connected. • Bad reception can be considered.	9 -
Picture is not clear (PC).	• Operate the "Auto Adjustment". • Adjust the Frequency and the Phase.	17 17
The picture is not sharp (TV).	• The reception may be weak. • The state of broadcast may also be bad. • Make sure the outside antenna is not connected.	
The picture is doubled or tripled (TV).	• Make sure the antenna is facing the right direction. • There may be reflected electric waves from mountains or buildings.	
There are stripes on the screen or color fade.	• Check this unit receiving interference from other devices. Transmission antennas of radio broadcasting stations and transmission antennas of amateur radios and cellular phones may also cause interference. • Use the unit as far apart as possible from devices that may cause possible interference.	

SPECIFICATIONS

Color TFT-LCD Monitor with TV

Resolution		1280 * 1024, SXGA
Color		16,777,216 Colors (Full Color)
Brightness		250 cd/m^2(nit)
Lamp life		20,000 hours
Contrast Ratio		350 : 1
Viewing Angle		H : 160 V : 160
Panel	Type	Amorphous Si TFT-LCD
	Actual Display Size	359.04(H) x 287.23(V) mm
	Diagonal Length	18.1", 459.7mm
PC Signal (Analog RGB)	H-Frequency	30~80 KHz
	V-Frequency	43~75 Hz
	Signal Level	0.7Vp-p
Video	Input Signal	CVBS / S-VIDEO
	Color Signal Type	NTSC / PAL /SECAM
	Sound Signal Type	Stereo
TV	Channel System	NTSC M
	Sound Signal Type	Mono
Power Voltage	Input	AC100~240V, 50/60Hz
	Output	DC12V
Power Consumption	On	Max. 49Watt
	Off- Mode	Max. 3 Watt
Speaker		Max. 2 Watt x 2
Size	W*H*D mm	480(W) x 425(H) x 62(D) mm, 180 (Stand Depth) mm
Weight		Max 7.5 Kg w/o accessories

SPECIFICATIONS

Available PC VGA Mode

Resolution	Vertical		Horizontal		Pixel Rate (MHz)	Standard Type	Remark
	Frequency (Hz)	Polarity	Frequency (KHz)	Polarity			
640 x 350	70.09	N	31.47	N	25.175	IBM	DOS
720 x 400	70.09	P	31.47	N	28.322	IBM	
640 x 480	59.94	N	31.47	N	25.175	VESA	VGA
	66.67	N	35.00	N	30.240	MAC	
	72.81	N	37.86	N	31.500	VESA	
	75.00	N	37.50	N	31.500	VESA	
800 x 600	56.25	N/P	35.16	N/P	36.000	VESA	SVGA
	60.32	P	37.88	P	40.000	VESA	
	72.19	P	48.08	P	50.000	VESA	
	75.00	P	46.88	P	49.500	VESA	
832 x 624	74.55	N	49.73	N	57.283	MAC	
1024 x 768	60.00	N	48.36	N	65.000	VESA	XGA
	60.00	N	48.78	N	64.000	MAC	
	70.07	N	56.48	N	75.000	VESA	
	72.10	P	57.52	P	75.000	IBM	
	74.93	N	60.24	N	80.000	MAC	
	75.03	P	60.02	P	78.750	VESA	
1280 x 1024	60.02	P	63.98	P	108.000	VESA	SXGA
	75.03	P	79.98	P	135.000	VESA	

HDTV Input (From Set Top Box)

Mode	Resolution	Vertical Frequency (Hz)	Horizontal Frequency (KHz)	Pixel Rate (MHz)	Standard Type	Remark
480p	720 x 480	59.94	31.47	27.000	SMPTE 293M	Progressive
720p	1280 x 720	59.94	44.96	74.176	SMPTE 296M	Progressive
1080i	1920 x 1080	29.97	33.72	74.176	SMPTE 274M	Interlace

FCC & ENERGY STAR® STATEMENTS

FCC Class B Radio Frequency Interference Statement

WARNING: (FOR FCC CERTIFIED MODELS)

This equipment has been tested and found to comply with the limits for a Class B digital device, pursuant to Part 15 of the FCC Rules. These limits are designed to provide reasonable protection against harmful interference in a residential installation. This equipment generates, uses and can radiate radio frequency energy, and if not installed and used in accordance with the instructions, may cause harmful interference to radio communications. However, there is no guarantee that interference will not occur in a particular installation. If this equipment does cause harmful interference to radio or television reception, which can be determined by turning the equipment off and on, the user is encouraged to try to correct the interference by one or more of the following measures:

1. Reorient or relocate the receiving antenna.
2. Increase the separation between the equipment and receiver.
3. Connect the equipment into an outlet on a circuit different from that to which the receiver is connected.
4. Consult the dealer or an experienced radio/TV technician for help.

NOTICE

1. The changes or modifications not expressly approved by the party responsible for compliance could void the user's authority to operate the equipment.
2. Shielded interface cables and AC power cord, if any, must be used in order to comply with the emission limits.
3. The manufacturer is not responsible for any radio or TV interference caused by unauthorized modification to this equipment. It is the responsibilities of the user to correct such interference.

As an ENERGY STAR Partner, Envision Peripherals, Inc. has determined that this product meets the ENERGY STAR guidelines for energy efficiency.

Appendix

V - Chip (US only)

1. Function of V-Chip

The V - Chip can block certain rated television shows off television (if chosen) so children cannot watch programs that their parents do not approve. The chip in each television will decode program-rating information which is transmitted along with the television signal. It will then compare the rating codes with values preset by the viewer, which is meant to be the parents. If the rating codes are higher than the preset values, the television signal will be blocked, and a blank screen will be displayed.

2. Setting V-Chip

EN-7500 has V-Chip feature and you can set it up via OSD.

1. Select V -Chip on OSD, then enter 4 digits of pin number(Initial pin number is "0000").
   If you enter an incorrect pin number "Incorrect" message will be displayed for 3 seconds.
2. Use arrow keys to change or to activate the highlighted function.
3. Setting up **TV Guidelines**
   Use arrow buttons to move around the matrix and press **Menu** button to change the value from "U" to "B" or "B" to "U".

	All	FV	V	S	L	D
TV-Y	B					
TV-Y7	B	B		**U** : Unblock **B** : Block		
TV-G	U					
TV-PG	U		U	U	U	U
TV-14	U		U	U	U	
TV-MA	U		U	U	U	

TP-Y : Young Children
TV-Y7: Children 7 and over
TV-G: General Audience
TV-PG: Parent Guidance
TV-14: Viewers 14 and over
TV-MA: Mature Audience

FV : Fantasy Violence
V : Violence
S : Sexual Situation
L : Coarse Language
D : Suggestive Dialog

4. Setting up **MPAA rating**

Use arrow buttons to move around the matrix and press **Menu** button to change the value from "U" to "B" or "B" to "U".

(MPAA : Motion Picture Association of America (movie rating organization))

G	U	General Audience
PG	U	Parental Guidance Suggested
PG-13	U	Parents Strongly Cautioned
R	U	Restricted Under 17 Requires
NC-17	U	No Children Under 17 Admitted
X	U	Adult Only
MR	U	Not Rated

5. Entering a new pin number

- Use numeric keys to enter a new pin number. Pin number confirm menu appears.
- Again, use numeric keys to enter the pin number you entered at the previous step. If the two pin numbers do not match, "Incorrect" message will be displayed for 3 seconds.

6. Blocking Screen

- If the incoming signal' s rating is higher than the one specified, the screen will be blanked and "Excessive rating" message will be appeared.