APPENDIX 1

SAR Measurement Data

3000 Bristol Circle, Oakville, Ontario, Canada L6H 6G4
Tel. #: 905-829-1570, Fax. #: 905-829-8050, Email: vic@ultratech-labs.com, Website: http://www.ultratech-labs.com

Table of Contents

EXHIBIT 1. HEAD SAR MEASUREMENTS **3**

FILE NAME: Q5X-065Q QT-300 INCOGNITO 470MHZ 100MW FRONT_30053 .DA52:0 4
FILE NAME: Q5X-065Q QT-300 INCOGNITO 470MHZ 100MW BACK 30053 .DA52:0 5
FILE NAME: Q5X-065Q QT-300 INCOGNITO 489MHZ 100MW FRONT_30053 .DA52:0 6
FILE NAME: Q5X-065Q QT-300 INCOGNITO 508MHZ 100MW FRONT_30053 .DA52:0 7
FILE NAME: Q5X-065Q QT-300 INCOGNITO 526HZ 100MW FRONT_30053 .DA52:0 8
FILE NAME: Q5X-065Q QT-300 INCOGNITO 545HZ 100MW FRONT_30053 .DA52:0 9

EXHIBIT 2. BODY SAR MEASUREMENTS **10**

FILE NAME: Q5X-065Q QT-300 PLAYERMIC 470MHZ 100MW FRONT .DA52:0 11
FILE NAME: Q5X-065Q QT-300 PLAYERMIC 489MHZ 100MW FRONT .DA52:0 12
FILE NAME: Q5X-065Q QT-300 PLAYERMIC 489 MHZ 100MW BACK-30052 .DA52:0 13
FILE NAME: Q5X-065Q QT-300 PLAYERMIC 508MHZ 100MW FRONT .DA52:0 14
FILE NAME: Q5X-065Q QT-300 PLAYERMIC 526MHZ 100MW FRONT .DA52:0 15
FILE NAME: Q5X-065Q QT-300 PLAYERMIC 545MHZ 100MW FRONT .DA52:0 16
FILE NAME: Q5X-065Q QT-300 BELTMIC 470MHZ 250MW FRONT-30054 .DA52:0 17
FILE NAME: Q5X-065Q QT-300 BELTMIC 470MHZ 250MW BACK-30054 .DA52:0 18
FILE NAME: Q5X-065Q QT-300 BELTMIC 489MHZ 250MW FRONT-30054 .DA52:0 19
FILE NAME: Q5X-065Q QT-300 BELTMIC 489MHZ 250MW BACK-30054 .DA52:0 20
FILE NAME: Q5X-065Q QT-300 BELTMIC 508MHZ 250MW FRONT-30054 .DA52:0 21
FILE NAME: Q5X-065Q QT-300 BELTMIC 526MHZ 250MW FRONT-30054 .DA52:0 22
FILE NAME: Q5X-065Q QT-300 BELTMIC 545MHZ 250MW FRONT-30054 .DA52:0 23
FILE NAME: Q5X-065Q QT-300 AQUAMIC 470MHZ 250MW FRONT .DA52:0 24
FILE NAME: Q5X-065Q QT-300 AQUAMIC 489MHZ 250MW FRONT .DA52:0 25
FILE NAME: Q5X-065Q QT-300 AQUAMIC 489MHZ 250MW BACK-30055 .DA52:0 26
FILE NAME: Q5X-065Q QT-300 AQUAMIC 508MHZ 250MW FRONT .DA52:0 27
FILE NAME: Q5X-065Q QT-300 AQUAMIC 526MHZ 250MW FRONT .DA52:0 28
FILE NAME: Q5X-065Q QT-300 AQUAMIC 545MHZ 250MW FRONT .DA52:0 29
FILE NAME: Q5X-065Q QT-300 INCOGNITO 470MHZ 250MW FRONT .DA52:0 30
FILE NAME: Q5X-065Q QT-300 INCOGNITO 489MHZ 250MW FRONT .DA52:0 31
FILE NAME: Q5X-065Q QT-300 INCOGNITO 508MHZ 250MW FRONT .DA52:0 32
FILE NAME: Q5X-065Q QT-300 INCOGNITO 526MHZ 250MW FRONT .DA52:0 33
FILE NAME: Q5X-065Q QT-300 INCOGNITO 526MHZ 250MW BACK-30053 .DA52:0 34
FILE NAME: Q5X-065Q QT-300 INCOGNITO 545MHZ 250MW FRONT .DA52:0 35

3000 Bristol Circle, Oakville, Ontario, Canada L6H 6G4
Tel. #: 905-829-1570, Fax. #: 905-829-8050, Email: vic@ultratech-labs.com, Website: http://www.ultratech-labs.com

EXHIBIT 1. HEAD SAR MEASUREMENTS

						Device Back Facing Phantom (Required Mounting Per User Manual)			Device Front Facing Phantom (Least Antenna Separation Distance)	
						Measured HEAD			Measured HEAD	
Device Model	Device S/N	Channel	Frequency (MHz)	Power (dBm)	Power Drift (dB)	SAR1g (mW/g)	SAR10g (mW/g)	Power Drift (dB)	SAR1g (mW/g)	SAR10g (mW/g)
QT-300 Incognito 100mW	30053	1	470	19.87	0.340	0.741	0.439	0.000	0.882	0.506
		2	489	19.87				0.000	0.729	0.422
		3	508	19.89				0.000	0.512	0.290
		4	526	19.99				0.000	0.433	0.241
		5	545	20.04				0.000	0.416	0.234

Test Laboratory: Ultratech Group of Labs

FILE NAME: ***Q5X-065Q QT-300 INCOGNITO 470MHZ 100MW FRONT_30053 .DA52:0***

DUT: QT-300; Type: UHF Transmitter; Serial: 30053

Communication System: UID 0, CW (0); Frequency: 470 MHz; Duty Cycle: 1:1
Medium parameters used: f = 470 MHz; σ = 0.858 S/m; ε_r = 44.721; ρ = 1000 kg/m^3 ; Phantom section: Flat Section ; Measurement Standard: DASY5 (IEEE/IEC/ANSI C63.19-2011)

DASY Configuration:

- Probe: EX3DV4 - SN3673; ConvF(10.43, 10.43, 10.43); Calibrated: 3/20/2017;
- Sensor-Surface: 1.4mm (Mechanical Surface Detection), Sensor-Surface: 3mm (Mechanical Surface Detection)
- Electronics: DAE4 Sn874; Calibrated: 8/21/2017
- Phantom: ELI 4.0; Type: QD OVA 001 BB; Serial: 1057
- DASY52 52.10.0(1446); SEMCAD X 14.6.10(7417)

Configuration_Head_Q5X QT-300 Incognito Low Band 470-545MHz 100mW/Head front, P=100mW, d=0mm/Area Scan (41x131x1): Interpolated grid: dx=1.500 mm, dy=1.500 mm
Maximum value of SAR (interpolated) = 1.54 W/kg

Configuration_Head_Q5X QT-300 Incognito Low Band 470-545MHz 100mW/Head front, P=100mW, d=0mm/Zoom Scan (5x5x7) (7x8x7)/Cube 0: Measurement grid: dx=7.5mm, dy=7.5mm, dz=5mm
Reference Value = 40.27 V/m; Power Drift = -0.19 dB
Peak SAR (extrapolated) = 1.60 W/kg
SAR(1 g) = 0.882 W/kg; SAR(10 g) = 0.506 W/kg (SAR corrected for target medium)
Maximum value of SAR (measured) = 1.07 W/kg

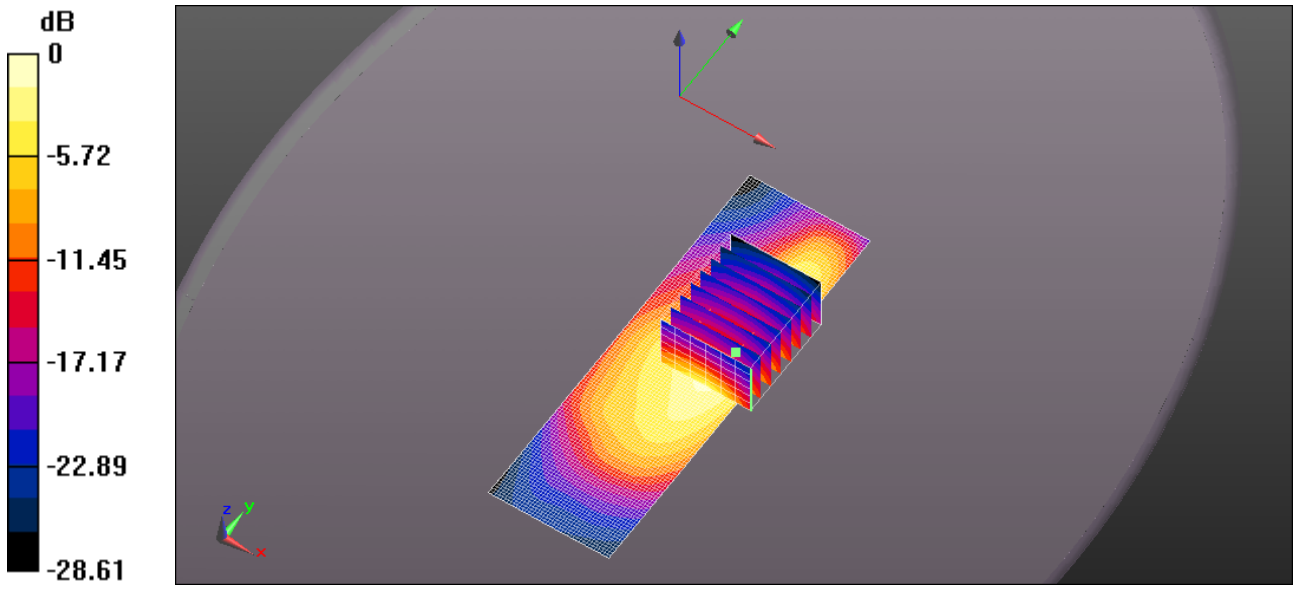

0 dB = 1.54 W/kg = 1.88 dBW/kg

Test Laboratory: Ultratech Group of Labs

FILE NAME: ***Q5X-065Q QT-300 INCOGNITO 470MHZ 100MW BACK 30053 .DA52:0***

DUT: QT-300; Type: UHF Transmitter; Serial: 30053

Communication System: UID 0, CW (0); Frequency: 470 MHz; Duty Cycle: 1:1
Medium parameters used: f = 470 MHz; σ = 0.858 S/m; ε_r = 44.721; ρ = 1000 kg/m^3; Phantom section: Flat Section ; Measurement Standard: DASY5 (IEEE/IEC/ANSI C63.19-2011)

DASY Configuration:

- Probe: EX3DV4 - SN3673; ConvF(10.43, 10.43, 10.43); Calibrated: 3/20/2017;
- Sensor-Surface: 1.4mm (Mechanical Surface Detection), Sensor-Surface: 3mm (Mechanical Surface Detection)
- Electronics: DAE4 Sn874; Calibrated: 8/21/2017
- Phantom: ELI 4.0; Type: QD OVA 001 BB; Serial: 1057
- DASY52 52.10.0(1446); SEMCAD X 14.6.10(7417)

Configuration_Head_Q5X QT-300 Incognito Low Band 470-545MHz 100mW/Head back, P=100mW, d=0mm/Area Scan (51x131x1): Interpolated grid: dx=1.500 mm, dy=1.500 mm
Maximum value of SAR (interpolated) = 1.07 W/kg

Configuration_Head_Q5X QT-300 Incognito Low Band 470-545MHz 100mW/Head back, P=100mW, d=0mm/Zoom Scan (5x5x7) (7x7x7)/Cube 0: Measurement grid: dx=7.5mm, dy=7.5mm, dz=5mm
Reference Value = 19.59 V/m; Power Drift = 0.34 dB
Peak SAR (extrapolated) = 1.29 W/kg
SAR(1 g) = 0.741 W/kg; SAR(10 g) = 0.439 W/kg (SAR corrected for target medium)
Maximum value of SAR (measured) = 0.892 W/kg

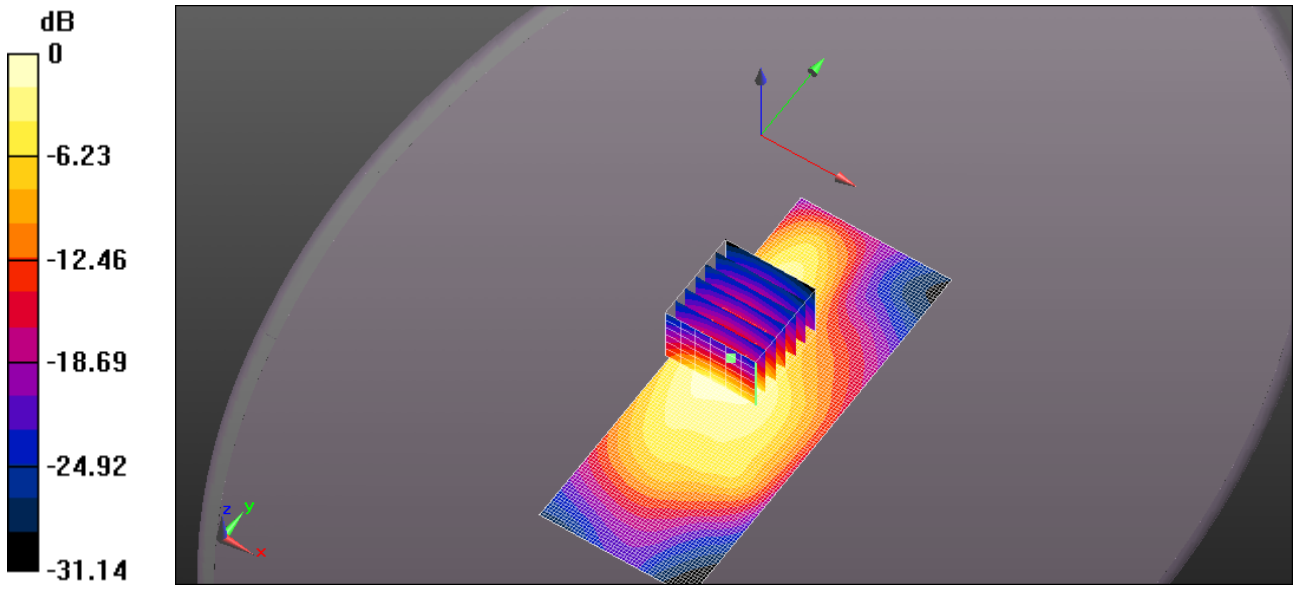

0 dB = 1.07 W/kg = 0.30 dBW/kg

Test Laboratory: Ultratech Group of Labs

FILE NAME: Q5X-065Q QT-300 INCOGNITO 489MHZ 100MW FRONT_30053 .DA52:0

DUT: QT-300; Type: UHF Transmitter; Serial: 30053

Communication System: UID 0, CW (0); Frequency: 489 MHz; Duty Cycle: 1:1
Medium parameters used (interpolated): f = 489 MHz; σ = 0.881 S/m; ε_r = 44.338; ρ = 1000 kg/m^3 ;
Phantom section: Flat Section ; Measurement Standard: DASY5 (IEEE/IEC/ANSI C63.19-2011)

DASY Configuration:

- Probe: EX3DV4 - SN3673; ConvF(10.43, 10.43, 10.43); Calibrated: 3/20/2017;
- Sensor-Surface: 1.4mm (Mechanical Surface Detection), Sensor-Surface: 3mm (Mechanical Surface Detection)
- Electronics: DAE4 Sn874; Calibrated: 8/21/2017
- Phantom: ELI 4.0; Type: QD OVA 001 BB; Serial: 1057
- DASY52 52.10.0(1446); SEMCAD X 14.6.10(7417)

Configuration_Head_Q5X QT-300 Incognito Low Band 470-545MHz 100mW/Head front, P=100mW, d=0mm/Area Scan (41x131x1): Interpolated grid: dx=1.500 mm, dy=1.500 mm

Configuration_Head_Q5X QT-300 Incognito Low Band 470-545MHz 100mW/Head front, P=100mW, d=0mm/Zoom Scan (5x5x7) (7x10x7)/Cube 0: Measurement grid: dx=7.5mm, dy=7.5mm, dz=5mm
Reference Value = 38.18 V/m; Power Drift = -0.12 dB
Peak SAR (extrapolated) = 1.32 W/kg
SAR(1 g) = 0.729 W/kg; SAR(10 g) = 0.422 W/kg (SAR corrected for target medium)

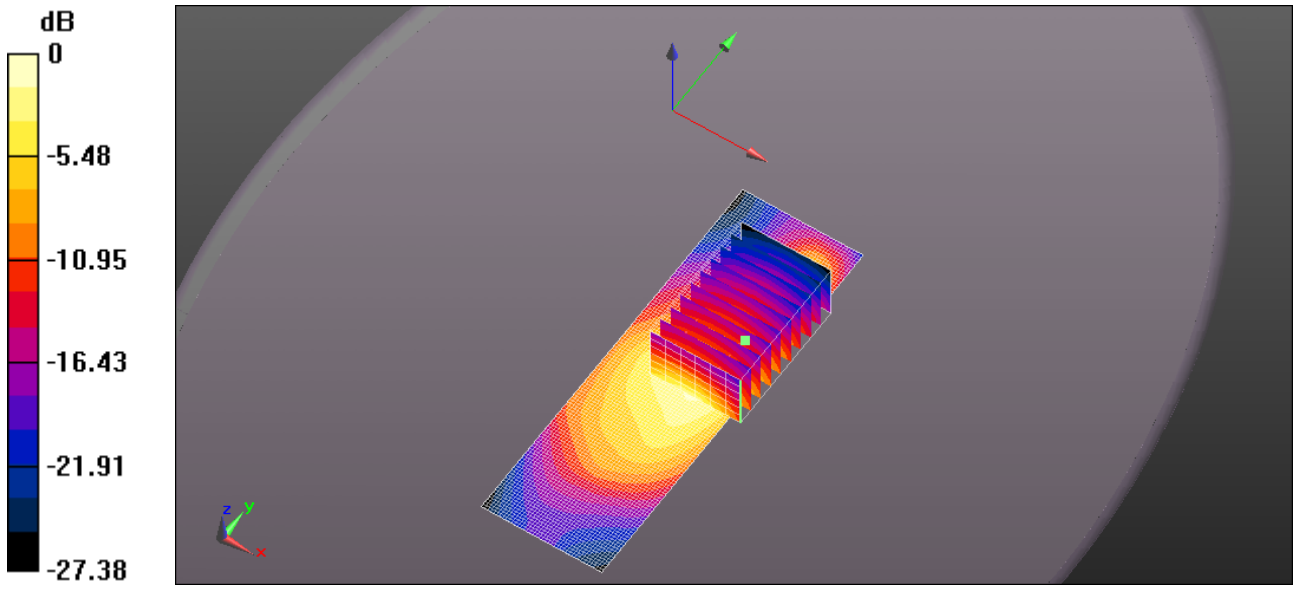

0 dB = 1.23 W/kg = 0.91 dBW/kg

Test Laboratory: Ultratech Group of Labs

FILE NAME: Q5X-065Q QT-300 INCOGNITO 508MHZ 100MW FRONT_30053 .DA52:0

DUT: QT-300; Type: UHF Transmitter; Serial: 30053

Communication System: UID 0, CW (0); Frequency: 508 MHz; Duty Cycle: 1:1
Medium parameters used (interpolated): f = 508 MHz; σ = 0.899 S/m; ε_r = 43.932; ρ = 1000 kg/m^3 ;
Phantom section: Flat Section ; Measurement Standard: DASY5 (IEEE/IEC/ANSI C63.19-2011)

DASY Configuration:

- Probe: EX3DV4 - SN3673; ConvF(10.43, 10.43, 10.43); Calibrated: 3/20/2017;
- Sensor-Surface: 1.4mm (Mechanical Surface Detection), Sensor-Surface: 3mm (Mechanical Surface Detection)
- Electronics: DAE4 Sn874; Calibrated: 8/21/2017
- Phantom: ELI 4.0; Type: QD OVA 001 BB; Serial: 1057
- DASY52 52.10.0(1446); SEMCAD X 14.6.10(7417)

Configuration_Head_Q5X QT-300 Incognito Low Band 470-545MHz 100mW/Head front, P=100mW, d=0mm/Area Scan (41x131x1): Interpolated grid: dx=1.500 mm, dy=1.500 mm

Configuration_Head_Q5X QT-300 Incognito Low Band 470-545MHz 100mW/Head front, P=100mW, d=0mm/Zoom Scan (5x5x7) (7x10x7)/Cube 0: Measurement grid: dx=7.5mm, dy=7.5mm, dz=5mm
Reference Value = 31.84 V/m; Power Drift = -0.01 dB
Peak SAR (extrapolated) = 0.982 W/kg
SAR(1 g) = 0.512 W/kg; SAR(10 g) = 0.290 W/kg (SAR corrected for target medium)

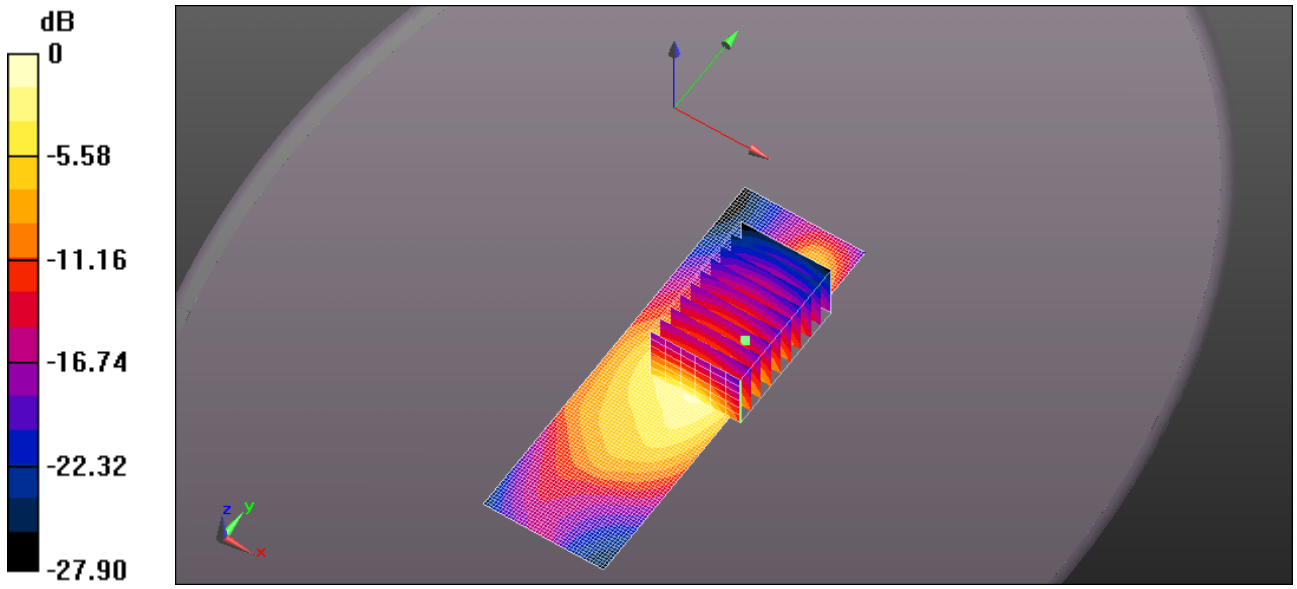

0 dB = 0.837 W/kg = -0.77 dBW/kg

Test Laboratory: Ultratech Group of Labs

FILE NAME: ***Q5X-065Q QT-300 INCOGNITO 526HZ 100MW FRONT_30053 .DA52:0***

DUT: QT-300; Type: UHF Transmitter; Serial: 30053

Communication System: UID 0, CW (0); Frequency: 526 MHz; Duty Cycle: 1:1
Medium parameters used (interpolated): f = 526 MHz; σ = 0.904 S/m; ε_r = 43.761; ρ = 1000 kg/m^3 ;
Phantom section: Flat Section ; Measurement Standard: DASY5 (IEEE/IEC/ANSI C63.19-2011)

DASY Configuration:

- Probe: EX3DV4 - SN3673; ConvF(10.43, 10.43, 10.43); Calibrated: 3/20/2017;
- Sensor-Surface: 1.4mm (Mechanical Surface Detection), Sensor-Surface: 3mm (Mechanical Surface Detection)
- Electronics: DAE4 Sn874; Calibrated: 8/21/2017
- Phantom: ELI 4.0; Type: QD OVA 001 BB; Serial: 1057
- DASY52 52.10.0(1446); SEMCAD X 14.6.10(7417)

Configuration_Head_Q5X QT-300 Incognito Low Band 470-545MHz 100mW/Head front, P=100mW, d=0mm/Area Scan (41x131x1): Interpolated grid: dx=1.500 mm, dy=1.500 mm

Configuration_Head_Q5X QT-300 Incognito Low Band 470-545MHz 100mW/Head front, P=100mW, d=0mm/Zoom Scan (5x5x7) (7x7x7)/Cube 0: Measurement grid: dx=7.5mm, dy=7.5mm, dz=5mm
Reference Value = 28.44 V/m; Power Drift = -0.17 dB
Peak SAR (extrapolated) = 0.855 W/kg
SAR(1 g) = 0.433 W/kg; SAR(10 g) = 0.241 W/kg (SAR corrected for target medium)

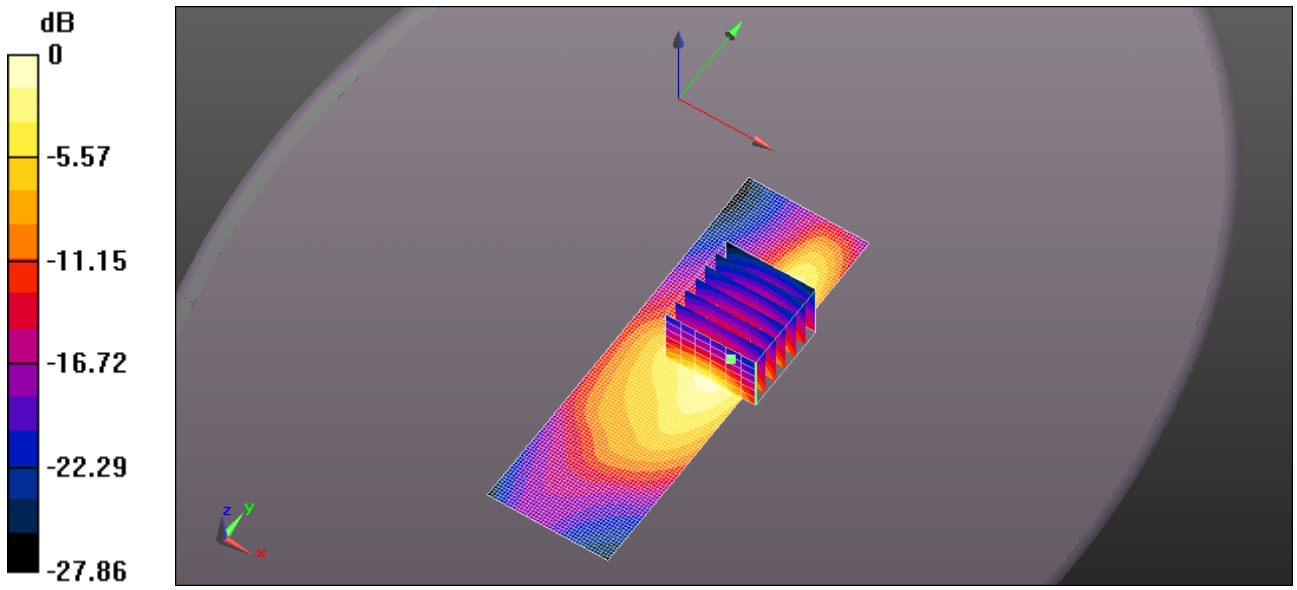

0 dB = 0.771 W/kg = -1.13 dBW/kg

Test Laboratory: Ultratech Group of Labs

FILE NAME: ***Q5X-065Q QT-300 INCOGNITO 545HZ 100MW FRONT_30053 .DA52:0***

DUT: QT-300; Type: UHF Transmitter; Serial: 30053

Communication System: UID 0, CW (0); Frequency: 545 MHz; Duty Cycle: 1:1
Medium parameters used (extrapolated): f = 545 MHz; σ = 0.923 S/m; ε_r = 43.498; ρ = 1000 kg/m^3 ;
Phantom section: Flat Section ; Measurement Standard: DASY5 (IEEE/IEC/ANSI C63.19-2011)

DASY Configuration:

- Probe: EX3DV4 - SN3673; ConvF(10.43, 10.43, 10.43); Calibrated: 3/20/2017;
- Sensor-Surface: 1.4mm (Mechanical Surface Detection), Sensor-Surface: 3mm (Mechanical Surface Detection)
- Electronics: DAE4 Sn874; Calibrated: 8/21/2017
- Phantom: ELI 4.0; Type: QD OVA 001 BB; Serial: 1057
- DASY52 52.10.0(1446); SEMCAD X 14.6.10(7417)

Configuration_Head_Q5X QT-300 Incognito Low Band 470-545MHz 100mW/Head front, P=100mW, d=0mm/Area Scan (41x131x1): Interpolated grid: dx=1.500 mm, dy=1.500 mm

Configuration_Head_Q5X QT-300 Incognito Low Band 470-545MHz 100mW/Head front, P=100mW, d=0mm/Zoom Scan (5x5x7) (7x7x7)/Cube 0: Measurement grid: dx=7.5mm, dy=7.5mm, dz=5mm
Reference Value = 26.04 V/m; Power Drift = -0.29 dB
Peak SAR (extrapolated) = 0.828 W/kg
SAR(1 g) = 0.416 W/kg; SAR(10 g) = 0.234 W/kg (SAR corrected for target medium)

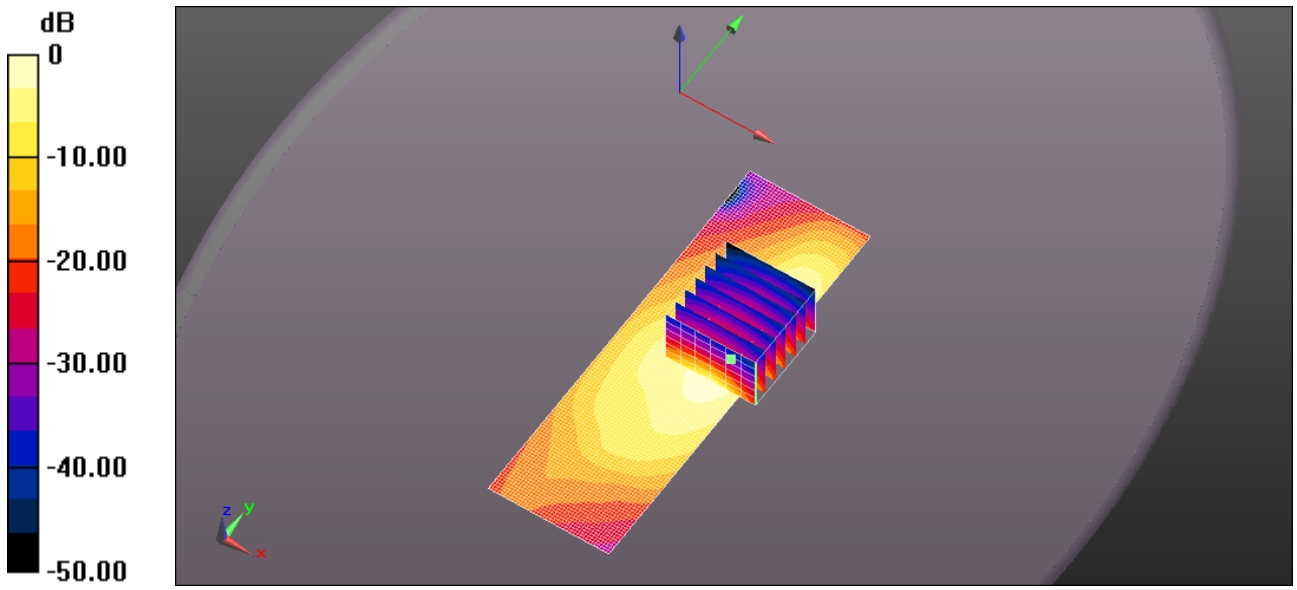

0 dB = 0.824 W/kg = -0.84 dBW/kg

EXHIBIT 2. BODY SAR MEASUREMENTS

						Device Back Facing Phantom (Required Mounting Per User Manual)			Device Front Facing Phantom (Least Antenna Separation Distance)	
						Measured BODY			Measured BODY	
Device Model	Device S/N	Channel	Frequency (MHz)	Power (dBm)	Power Drift (dB)	SAR1g (mW/g)	SAR10g (mW/g)	Power Drift (dB)	SAR1g (mW/g)	SAR10g (mW/g)
QT-300 BeltMic 250mW	30054(250mW)	1	470	23.67	0.150	0.962	0.624	0.260	1.420	0.859
		2	489	23.89	0.200	0.891	0.575	0.220	1.430	0.858
		3	508	23.84				0.250	1.170	0.699
		4	526	23.69				0.280	1.070	0.638
		5	545	22.83				0.240	0.750	0.447
QT-300 PlayerMic 100mW	30052	1	470	19.93				0.320	0.657	0.372
		2	489	20.03	0.280	0.914	0.552	0.260	1.080	0.862
		3	508	20.03				0.280	0.875	0.716
		4	526	19.97				0.170	0.833	0.483
		5	545	19.93				0.000	0.892	0.499
QT-300 AquaMic 250mW	30055(250mW)	1	470	23.83				0.250	1.330	0.831
		2	489	24.20	0.130	0.959	0.624	0.240	1.440	0.898
		3	508	24.07				0.250	1.250	0.776
		4	526	23.72				0.260	1.030	0.638
		5	545	23.11				0.280	0.792	0.493
QT-300 Incognito 250mW	30053	1	470	23.36				0.210	0.997	0.574
		2	489	24.01				0.140	0.773	0.440
		3	508	23.83				0.110	0.861	0.500
		4	526	23.36	0.330	0.980	0.586	0.220	1.110	0.627
		5	545	22.87				0.240	1.040	0.589

Test Laboratory: Ultratech Group of Labs

FILE NAME: Q5X-065Q QT-300 PLAYERMIC 470MHZ 100MW FRONT .DA52:0

DUT: QT-300 PlayerMic; Type: UHF Transmitter; Serial: 30052

Communication System: UID 0, CW (0); Frequency: 470 MHz; Duty Cycle: 1:1
Medium parameters used: f = 470 MHz; σ = 0.929 S/m; ε_r = 57.603; ρ = 1000 kg/m^3; Phantom section: Flat Section; Measurement Standard: DASY5 (IEEE/IEC/ANSI C63.19-2007)

DASY Configuration:

- Probe: EX3DV4 - SN3673; ConvF(10.51, 10.51, 10.51); Calibrated: 3/20/2017;
- Sensor-Surface: 1.4mm (Mechanical Surface Detection), Sensor-Surface: 3mm (Mechanical Surface Detection)
- Electronics: DAE4 Sn874; Calibrated: 8/21/2017
- Phantom: ELI 4.0; Type: QD OVA 001 BB; Serial: 1057
- DASY52 52.10.0(1446); SEMCAD X 14.6.10(7417)

Configuration_Body_Q5X QT-300 Low Band 470-545MHz 100mW/Body Front, P=100mW, d=0mm/Area Scan (41x131x1): Interpolated grid: dx=1.500 mm, dy=1.500 mm
Maximum value of SAR (interpolated) = 1.05 W/kg

Configuration_Body_Q5X QT-300 Low Band 470-545MHz 100mW/Body Front, P=100mW, d=0mm/Zoom Scan (5x5x7) (7x7x7)/Cube 0: Measurement grid: dx=7.5mm, dy=7.5mm, dz=5mm
Reference Value = 29.57 V/m; Power Drift = 0.32 dB
Peak SAR (extrapolated) = 1.24 W/kg
SAR(1 g) = 0.657 W/kg; SAR(10 g) = 0.372 W/kg (SAR corrected for target medium)
Maximum value of SAR (measured) = 0.785 W/kg

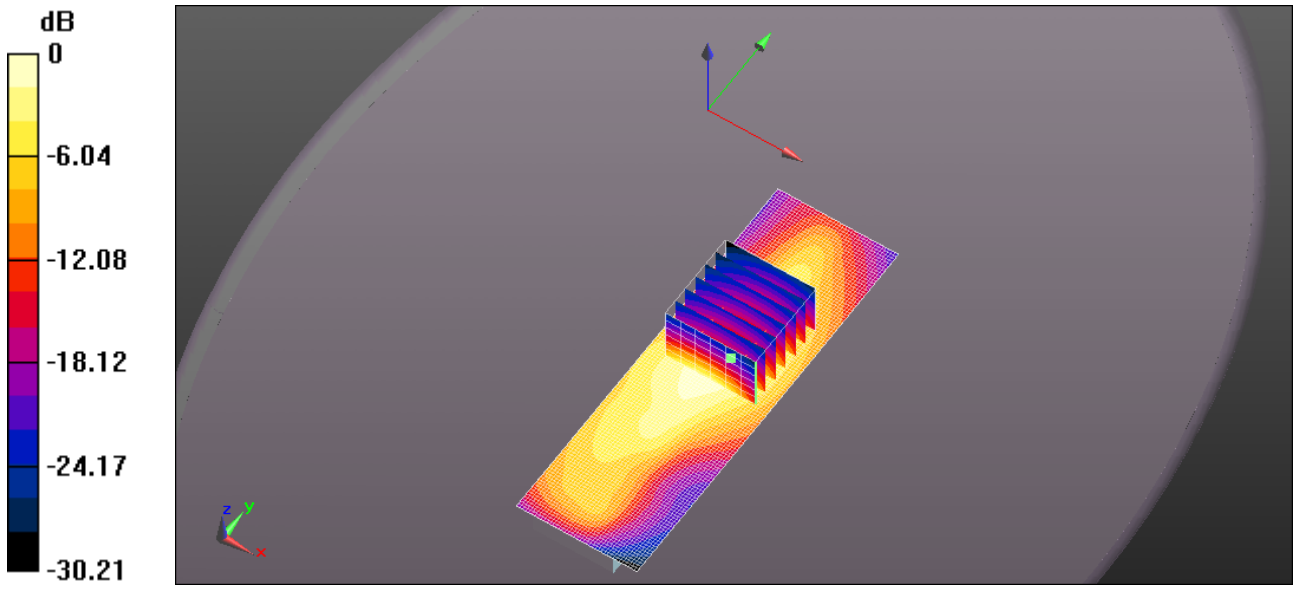

0 dB = 1.05 W/kg = 0.23 dBW/kg

Test Laboratory: Ultratech Group of Labs

FILE NAME: Q5X-065Q QT-300 PLAYERMIC 489MHZ 100MW FRONT .DA52:0

DUT: QT-300 PlayerMic; Type: UHF Transmitter; Serial: 30052

Communication System: UID 0, CW (0); Frequency: 489 MHz; Duty Cycle: 1:1
Medium parameters used (interpolated): f = 489 MHz; σ = 0.946 S/m; ε_r = 57.191; ρ = 1000 kg/m^3 ;
Phantom section: Flat Section ; Measurement Standard: DASY5 (IEEE/IEC/ANSI C63.19-2007)

DASY Configuration:

- Probe: EX3DV4 - SN3673; ConvF(10.51, 10.51, 10.51); Calibrated: 3/20/2017;
- Sensor-Surface: 1.4mm (Mechanical Surface Detection), Sensor-Surface: 3mm (Mechanical Surface Detection)
- Electronics: DAE4 Sn874; Calibrated: 8/21/2017
- Phantom: ELI 4.0; Type: QD OVA 001 BB; Serial: 1057
- DASY52 52.10.0(1446); SEMCAD X 14.6.10(7417)

Configuration_Body_Q5X QT-300 Low Band 470-545MHz 100mW/Body Front, P=100mW, d=0mm/Area Scan (41x131x1): Interpolated grid: dx=1.500 mm, dy=1.500 mm
Maximum value of SAR (interpolated) = 1.79 W/kg

Configuration_Body_Q5X QT-300 Low Band 470-545MHz 100mW/Body Front, P=100mW, d=0mm/Zoom Scan (5x5x7) (7x7x7)/Cube 0: Measurement grid: dx=7.5mm, dy=7.5mm, dz=5mm
Reference Value = 36.93 V/m; Power Drift = 0.26 dB
Peak SAR (extrapolated) = 2.06 W/kg
SAR(1 g) = 1.08 W/kg; SAR(10 g) = 0.603 W/kg (SAR corrected for target medium)
Maximum value of SAR (measured) = 1.33 W/kg

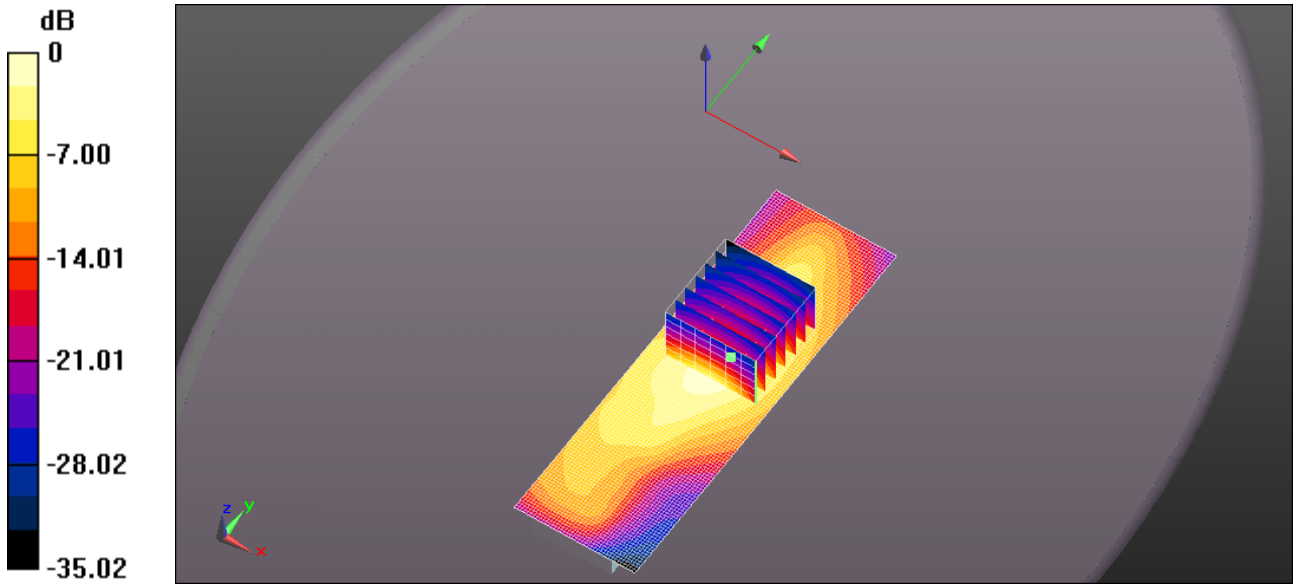

0 dB = 1.79 W/kg = 2.53 dBW/kg

Test Laboratory: Ultratech Group of Labs

FILE NAME: ***Q5X-065Q QT-300 PLAYERMIC 489 MHZ 100MW BACK-30052 .DA52:0***

DUT: QT-300; Type: UHF Transceiver; Serial: 30052

Communication System: UID 0, CW (0); Frequency: 489 MHz; Duty Cycle: 1:1
Medium parameters used (interpolated): f = 489 MHz; σ = 0.943 S/m; ε_r = 57.254; ρ = 1000 kg/m^3 ;
Phantom section: Flat Section ; Measurement Standard: DASY5 (IEEE/IEC/ANSI C63.19-2007)

DASY Configuration:

- Probe: EX3DV4 - SN3673; ConvF(10.51, 10.51, 10.51); Calibrated: 3/20/2017;
- Sensor-Surface: 1.4mm (Mechanical Surface Detection), Sensor-Surface: 3mm (Mechanical Surface Detection)
- Electronics: DAE4 Sn874; Calibrated: 8/21/2017
- Phantom: ELI 4.0; Type: QD OVA 001 BB; Serial: 1057
- DASY52 52.10.0(1446); SEMCAD X 14.6.10(7417)

Configuration_Body_Q5X QT-300 Low Band 470-545MHz 100mW/Body Back, P=100mW, d=0mm/Area Scan (61x131x1): Interpolated grid: dx=1.500 mm, dy=1.500 mm
Maximum value of SAR (interpolated) = 1.44 W/kg

Configuration_Body_Q5X QT-300 Low Band 470-545MHz 100mW/Body Back, P=100mW, d=0mm/Zoom Scan (5x5x7) (7x7x7)/Cube 0: Measurement grid: dx=7.5mm, dy=7.5mm, dz=5mm
Reference Value = 6.360 V/m; Power Drift = 0.28 dB
Peak SAR (extrapolated) = 1.59 W/kg
SAR(1 g) = 0.914 W/kg; SAR(10 g) = 0.552 W/kg (SAR corrected for target medium)
Maximum value of SAR (measured) = 1.12 W/kg

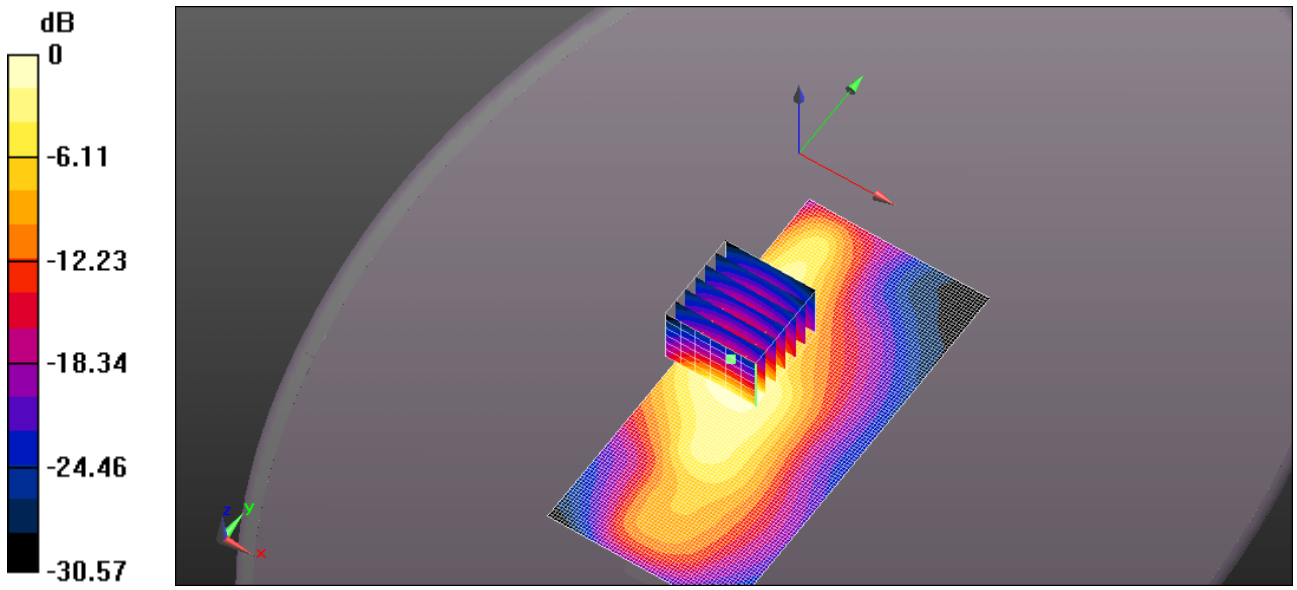

0 dB = 1.44 W/kg = 1.59 dBW/kg

Test Laboratory: Ultratech Group of Labs

FILE NAME: Q5X-065Q QT-300 PLAYERMIC 508MHZ 100MW FRONT .DA52:0

DUT: QT-300 PlayerMic; Type: UHF Transmitter; Serial: 30052

Communication System: UID 0, CW (0); Frequency: 508 MHz; Duty Cycle: 1:1
Medium parameters used (interpolated): f = 508 MHz; σ = 0.957 S/m; ε_r = 56.967; ρ = 1000 kg/m^3 ;
Phantom section: Flat Section ; Measurement Standard: DASY5 (IEEE/IEC/ANSI C63.19-2007)

DASY Configuration:

- Probe: EX3DV4 - SN3673; ConvF(10.51, 10.51, 10.51); Calibrated: 3/20/2017;
- Sensor-Surface: 1.4mm (Mechanical Surface Detection), Sensor-Surface: 3mm (Mechanical Surface Detection)
- Electronics: DAE4 Sn874; Calibrated: 8/21/2017
- Phantom: ELI 4.0; Type: QD OVA 001 BB; Serial: 1057
- DASY52 52.10.0(1446); SEMCAD X 14.6.10(7417)

Configuration_Body_Q5X QT-300 PlayerMic Low Band 470-545MHz 100mW/Body Front, P=100mW, d=0mm/Area Scan (41x131x1): Interpolated grid: dx=1.500 mm, dy=1.500 mm.
Maximum value of SAR (interpolated) = 1.54 W/kg

Configuration_Body_Q5X QT-300 PlayerMic Low Band 470-545MHz 100mW/Body Front, P=100mW, d=0mm/Zoom Scan (5x5x7) (7x7x7)/Cube 0: Measurement grid: dx=7.5mm, dy=7.5mm, dz=5mm
Reference Value = 33.28 V/m; Power Drift = 0.28 dB
Peak SAR (extrapolated) = 1.73 W/kg
SAR(1 g) = 0.875 W/kg; SAR(10 g) = 0.485 W/kg (SAR corrected for target medium)
Maximum value of SAR (measured) = 1.11 W/kg

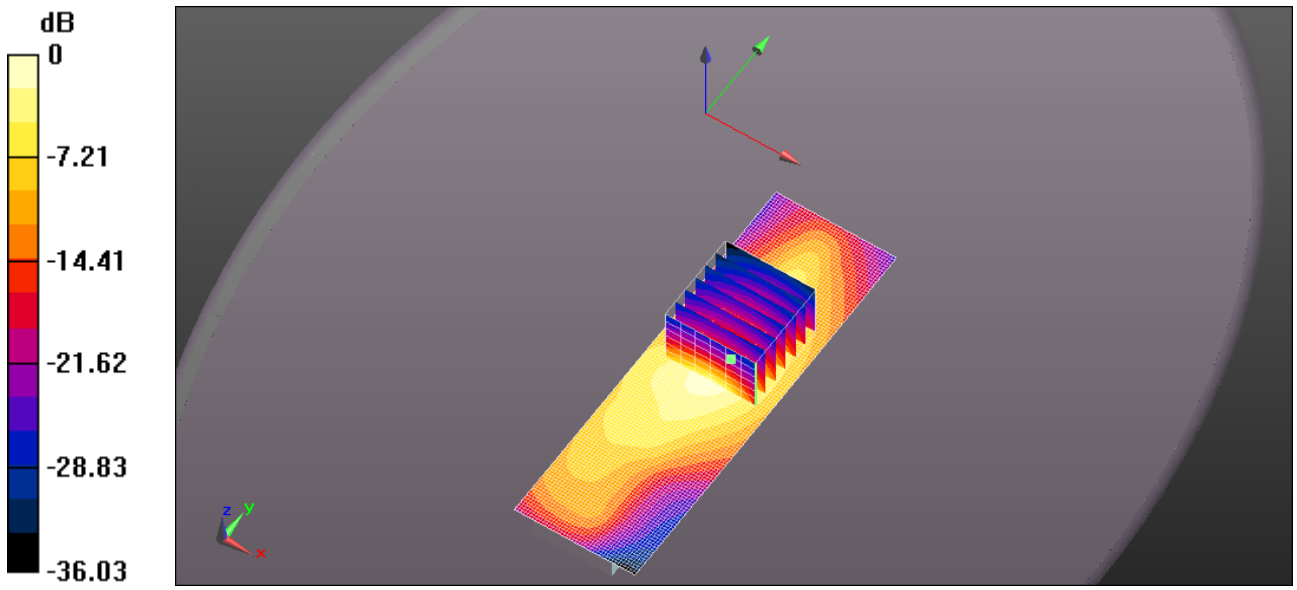

0 dB = 1.54 W/kg = 1.88 dBW/kg

Test Laboratory: Ultratech Group of Labs

FILE NAME: Q5X-065Q QT-300 PLAYERMIC 526MHZ 100MW FRONT .DA52:0

DUT: QT-300 PlayerMic; Type: UHF Transmitter; Serial: 30052

Communication System: UID 0, CW (0); Frequency: 526 MHz; Duty Cycle: 1:1
Medium parameters used (extrapolated): f = 526 MHz; σ = 0.986 S/m; ε_r = 56.644; ρ = 1000 kg/m^3 ;
Phantom section: Flat Section ; Measurement Standard: DASY5 (IEEE/IEC/ANSI C63.19-2007)

DASY Configuration:

- Probe: EX3DV4 - SN3673; ConvF(10.51, 10.51, 10.51); Calibrated: 3/20/2017;
- Sensor-Surface: 1.4mm (Mechanical Surface Detection), Sensor-Surface: 3mm (Mechanical Surface Detection)
- Electronics: DAE4 Sn874; Calibrated: 8/21/2017
- Phantom: ELI 4.0; Type: QD OVA 001 BB; Serial: 1057
- DASY52 52.10.0(1446); SEMCAD X 14.6.10(7417)

Configuration_Body_Q5X QT-300 Low Band 470-545MHz 100mW/Body Front, P=100mW, d=0mm/Area Scan (41x131x1): Interpolated grid: dx=1.500 mm, dy=1.500 mm
Maximum value of SAR (interpolated) = 1.38 W/kg

Configuration_Body_Q5X QT-300 Low Band 470-545MHz 100mW/Body Front, P=100mW, d=0mm/Zoom Scan (5x5x7) (7x7x7)/Cube 0: Measurement grid: dx=7.5mm, dy=7.5mm, dz=5mm
Reference Value = 38.00 V/m; Power Drift = 0.17 dB
Peak SAR (extrapolated) = 1.77 W/kg
SAR(1 g) = 0.883 W/kg; SAR(10 g) = 0.483 W/kg (SAR corrected for target medium)
Maximum value of SAR (measured) = 1.17 W/kg

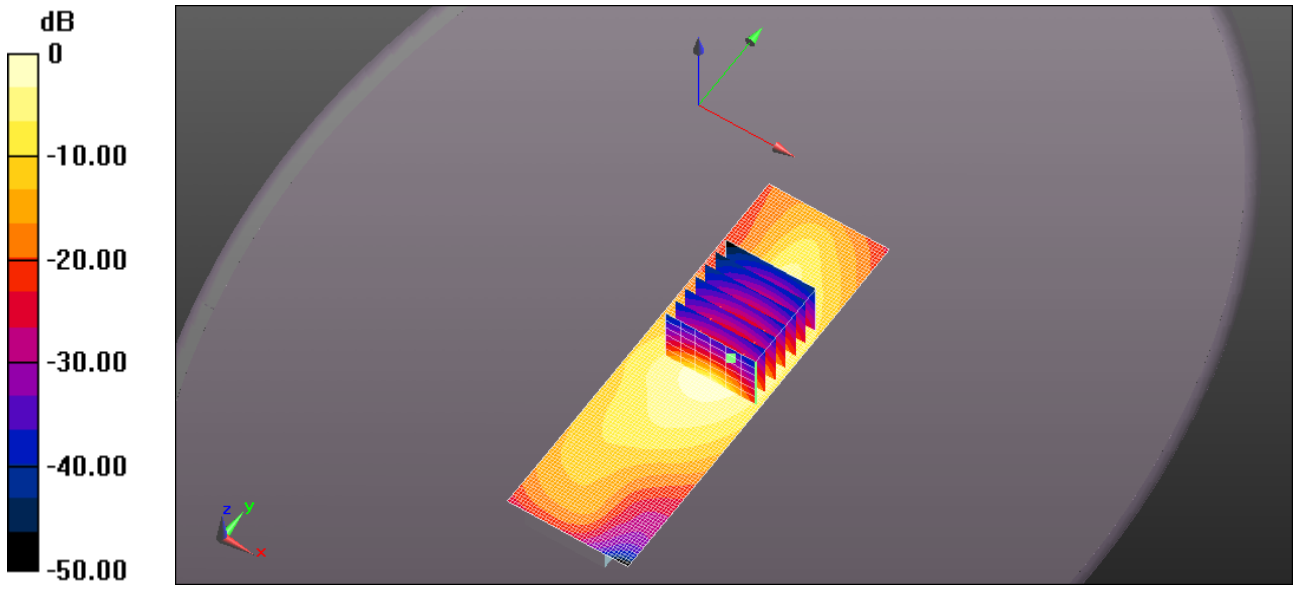

0 dB = 1.38 W/kg = 1.38 dBW/kg

Test Laboratory: Ultratech Group of Labs

FILE NAME: Q5X-065Q QT-300 PLAYERMIC 545MHZ 100MW FRONT .DA52:0

DUT: QT-300 PlayerMic; Type: UHF Transmitter; Serial: 30052

Communication System: UID 0, CW (0); Frequency: 545 MHz; Duty Cycle: 1:1
Medium parameters used (extrapolated): f = 545 MHz; σ = 0.991 S/m; ε_r = 56.57; ρ = 1000 kg/m^3 ; Phantom section: Flat Section ; Measurement Standard: DASY5 (IEEE/IEC/ANSI C63.19-2007)

DASY Configuration:

- Probe: EX3DV4 - SN3673; ConvF(10.51, 10.51, 10.51); Calibrated: 3/20/2017;
- Sensor-Surface: 1.4mm (Mechanical Surface Detection), Sensor-Surface: 3mm (Mechanical Surface Detection)
- Electronics: DAE4 Sn874; Calibrated: 8/21/2017
- Phantom: ELI 4.0; Type: QD OVA 001 BB; Serial: 1057
- DASY52 52.10.0(1446); SEMCAD X 14.6.10(7417)

Configuration_Body_Q5X QT-300 Low Band 470-545MHz 100mW/Body Front, P=100mW, d=0mm/Area Scan (41x131x1): Interpolated grid: dx=1.500 mm, dy=1.500 mm
Maximum value of SAR (interpolated) = 1.37 W/kg

Configuration_Body_Q5X QT-300 Low Band 470-545MHz 100mW/Body Front, P=100mW, d=0mm/Zoom Scan (5x5x7) (7x7x7)/Cube 0: Measurement grid: dx=7.5mm, dy=7.5mm, dz=5mm
Reference Value = 40.29 V/m; Power Drift = -0.01 dB
Peak SAR (extrapolated) = 1.75 W/kg
SAR(1 g) = 0.892 W/kg; SAR(10 g) = 0.499 W/kg (SAR corrected for target medium)
Maximum value of SAR (measured) = 1.17 W/kg

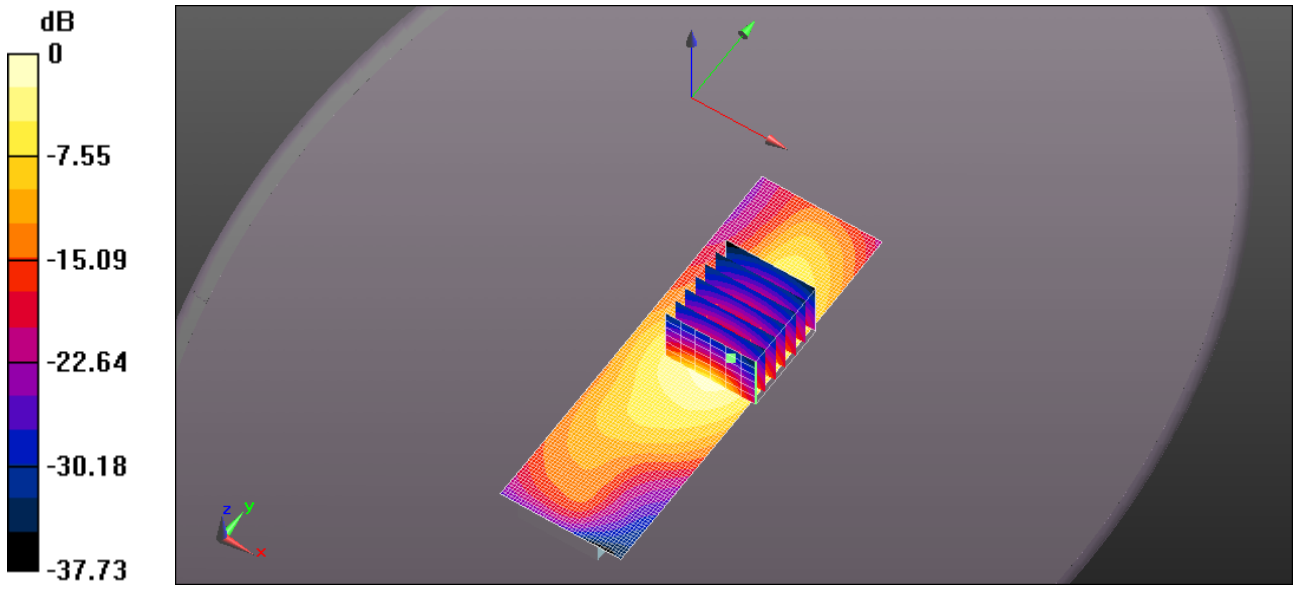

0 dB = 1.37 W/kg = 1.36 dBW/kg

Test Laboratory: Ultratech Group of Labs

FILE NAME: Q5X-065Q QT-300 BELTMIC 470MHZ 250MW FRONT-30054 .DA52:0

DUT: QT-300; Type: UHF Transmitter; Serial: 30054

Communication System: UID 0, CW (0); Frequency: 470 MHz; Duty Cycle: 1:1
Medium parameters used: f = 470 MHz; σ = 0.929 S/m; ε_r = 57.603; ρ = 1000 kg/m^3 ; Phantom section: Flat Section ; Measurement Standard: DASY5 (IEEE/IEC/ANSI C63.19-2007)

DASY Configuration:

- Probe: EX3DV4 - SN3673; ConvF(10.51, 10.51, 10.51); Calibrated: 3/20/2017;
- Sensor-Surface: 1.4mm (Mechanical Surface Detection), Sensor-Surface: 3mm (Mechanical Surface Detection)
- Electronics: DAE4 Sn874; Calibrated: 8/21/2017
- Phantom: ELI 4.0; Type: QD OVA 001 BB; Serial: 1057
- DASY52 52.10.0(1446); SEMCAD X 14.6.10(7417)

Configuration_Body_Q5X QT-300 BeltMic Low Band 470-545MHz 250mW/Body Front, P=250mW, d=0mm/Area Scan (51x131x1): Interpolated grid: dx=1.500 mm, dy=1.500 mm
Maximum value of SAR (interpolated) = 2.06 W/kg

Configuration_Body_Q5X QT-300 BeltMic Low Band 470-545MHz 250mW/Body Front, P=250mW, d=0mm/Zoom Scan (5x5x7) (7x7x7)/Cube 0: Measurement grid: dx=7.5mm, dy=7.5mm, dz=5mm
Reference Value = 16.81 V/m; Power Drift = 0.26 dB
Peak SAR (extrapolated) = 2.46 W/kg
SAR(1 g) = 1.42 W/kg; SAR(10 g) = 0.859 W/kg (SAR corrected for target medium)
Maximum value of SAR (measured) = 1.72 W/kg

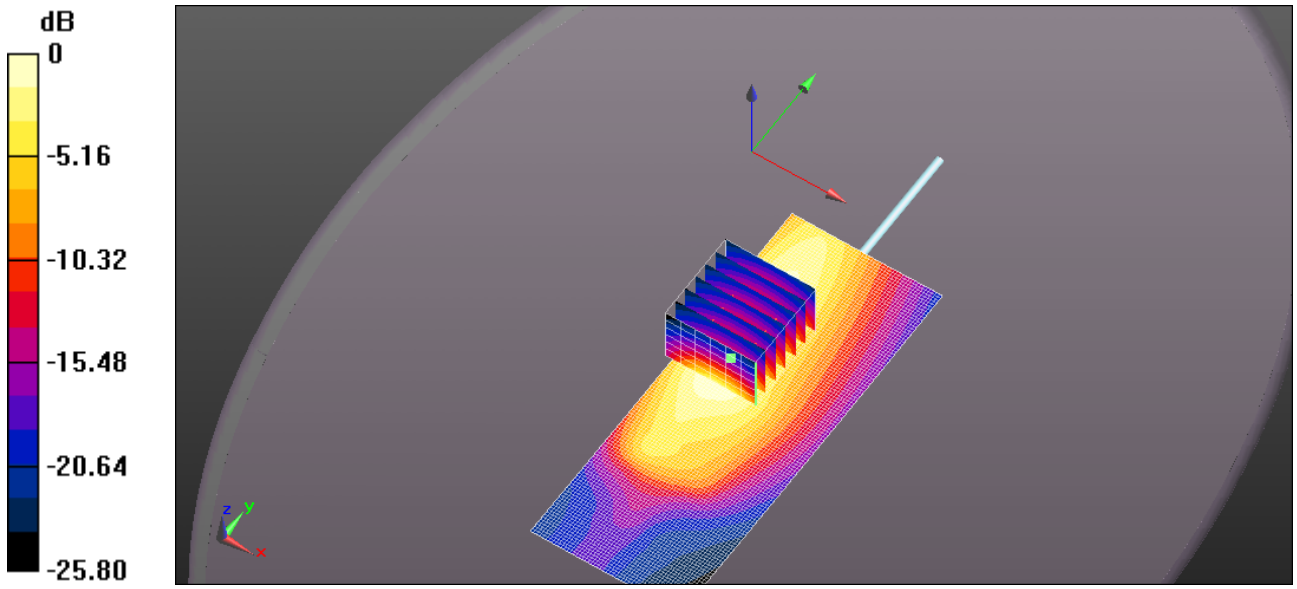

0 dB = 2.06 W/kg = 3.14 dBW/kg

Test Laboratory: Ultratech Group of Labs

FILE NAME: Q5X-065Q QT-300 BELTMIC 470MHZ 250MW BACK-30054 .DA52:0

DUT: QT-300; Type: UHF Transmitter; Serial: 30054

Communication System: UID 0, CW (0); Frequency: 470 MHz; Duty Cycle: 1:1
Medium parameters used: f = 470 MHz; σ = 0.929 S/m; ε_r = 57.603; ρ = 1000 kg/m^3 ; Phantom section: Flat Section ; Measurement Standard: DASY5 (IEEE/IEC/ANSI C63.19-2007)

DASY Configuration:

- Probe: EX3DV4 - SN3673; ConvF(10.51, 10.51, 10.51); Calibrated: 3/20/2017;
- Sensor-Surface: 1.4mm (Mechanical Surface Detection), Sensor-Surface: 3mm (Mechanical Surface Detection)
- Electronics: DAE4 Sn874; Calibrated: 8/21/2017
- Phantom: ELI 4.0; Type: QD OVA 001 BB; Serial: 1057
- DASY52 52.10.0(1446); SEMCAD X 14.6.10(7417)

Configuration_Body_Q5X QT-300 BeltMic Low Band 470-545MHz 250mW/Body Back, P=250mW, d=0mm/Area Scan (51x101x1): Interpolated grid: dx=1.500 mm, dy=1.500 mm
Maximum value of SAR (interpolated) = 1.34 W/kg

Configuration_Body_Q5X QT-300 BeltMic Low Band 470-545MHz 250mW/Body Back, P=250mW, d=0mm/Zoom Scan (5x5x7) (7x7x7)/Cube 0: Measurement grid: dx=7.5mm, dy=7.5mm, dz=5mm
Reference Value = 32.12 V/m; Power Drift = 0.15 dB
Peak SAR (extrapolated) = 1.52 W/kg
SAR(1 g) = 0.962 W/kg; SAR(10 g) = 0.624 W/kg (SAR corrected for target medium)
Maximum value of SAR (measured) = 1.12 W/kg

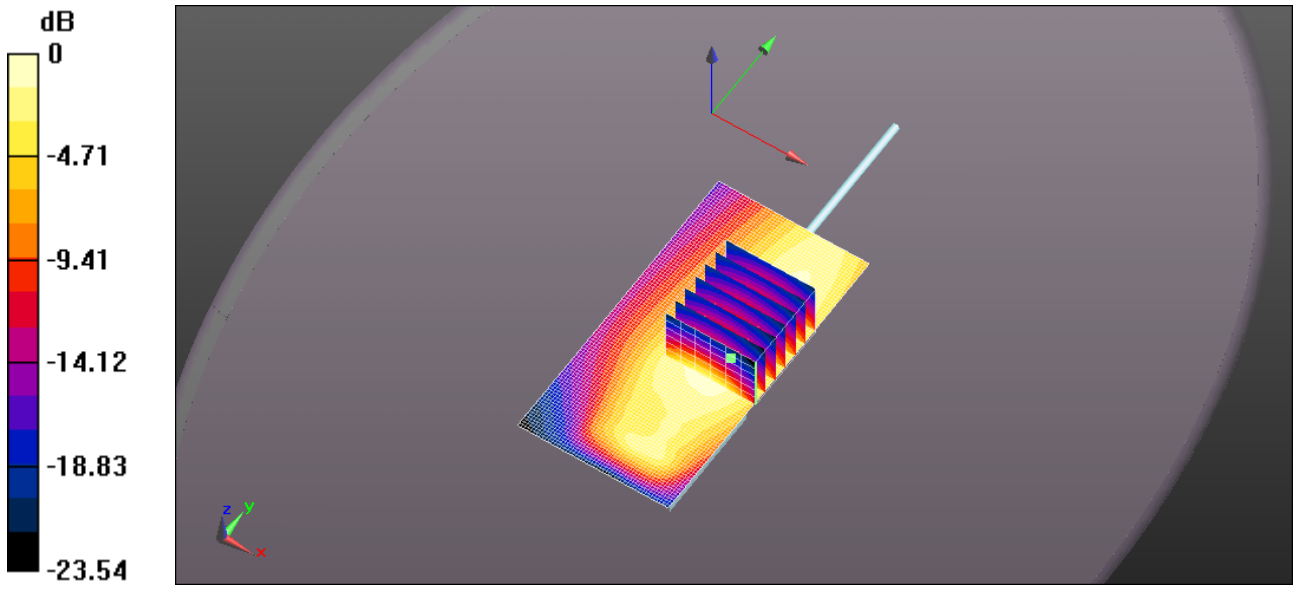

0 dB = 1.34 W/kg = 1.28 dBW/kg

Test Laboratory: Ultratech Group of Labs

FILE NAME: Q5X-065Q QT-300 BELTMIC 489MHZ 250MW FRONT-30054 .DA52:0

DUT: QT-300; Type: UHF Transmitter; Serial: 30054

Communication System: UID 0, CW (0); Frequency: 489 MHz; Duty Cycle: 1:1
Medium parameters used (interpolated): f = 489 MHz; σ = 0.943 S/m; ε_r = 57.254; ρ = 1000 kg/m^3 ;
Phantom section: Flat Section ; Measurement Standard: DASY5 (IEEE/IEC/ANSI C63.19-2007)

DASY Configuration:

- Probe: EX3DV4 - SN3673; ConvF(10.51, 10.51, 10.51); Calibrated: 3/20/2017;
- Sensor-Surface: 1.4mm (Mechanical Surface Detection), Sensor-Surface: 3mm (Mechanical Surface Detection)
- Electronics: DAE4 Sn874; Calibrated: 8/21/2017
- Phantom: ELI 4.0; Type: QD OVA 001 BB; Serial: 1057
- DASY52 52.10.0(1446); SEMCAD X 14.6.10(7417)

Configuration_Body_Q5X QT-300 BeltMic Low Band 470-545MHz 250mW/Body Front, P=250mW, d=0mm/Area Scan (51x131x1): Interpolated grid: dx=1.500 mm, dy=1.500 mm
Maximum value of SAR (interpolated) = 2.31 W/kg

Configuration_Body_Q5X QT-300 BeltMic Low Band 470-545MHz 250mW/Body Front, P=250mW, d=0mm/Zoom Scan (5x5x7) (7x7x7)/Cube 0: Measurement grid: dx=7.5mm, dy=7.5mm, dz=5mm
Reference Value = 13.21 V/m; Power Drift = 0.22 dB
Peak SAR (extrapolated) = 2.54 W/kg
SAR(1 g) = 1.43 W/kg; SAR(10 g) = 0.858 W/kg (SAR corrected for target medium)
Maximum value of SAR (measured) = 1.78 W/kg

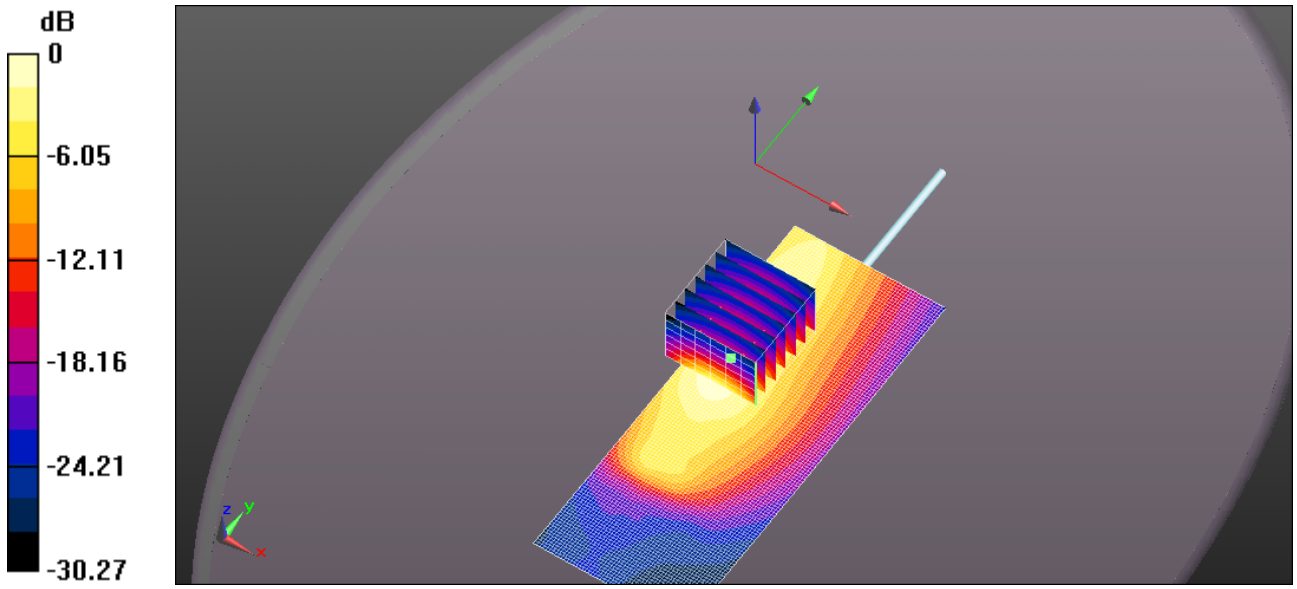

0 dB = 2.31 W/kg = 3.63 dBW/kg

Test Laboratory: Ultratech Group of Labs

FILE NAME: ***Q5X-065Q QT-300 BELTMIC 489MHZ 250MW BACK-30054 .DA52:0***

DUT: QT-300; Type: UHF Transmitter; Serial: 30054

Communication System: UID 0, CW (0); Frequency: 489 MHz; Duty Cycle: 1:1
Medium parameters used (interpolated): f = 489 MHz; σ = 0.943 S/m; ε_r = 57.254; ρ = 1000 kg/m^3 ;
Phantom section: Flat Section ; Measurement Standard: DASY5 (IEEE/IEC/ANSI C63.19-2007)

DASY Configuration:

- Probe: EX3DV4 - SN3673; ConvF(10.51, 10.51, 10.51); Calibrated: 3/20/2017;
- Sensor-Surface: 1.4mm (Mechanical Surface Detection), Sensor-Surface: 3mm (Mechanical Surface Detection)
- Electronics: DAE4 Sn874; Calibrated: 8/21/2017
- Phantom: ELI 4.0; Type: QD OVA 001 BB; Serial: 1057
- DASY52 52.10.0(1446); SEMCAD X 14.6.10(7417)

Configuration_Body_Q5X QT-300 BeltMic Low Band 470-545MHz 250mW/Body Back, P=250mW, d=0mm/Area Scan (51x101x1): Interpolated grid: dx=1.500 mm, dy=1.500 mm
Maximum value of SAR (interpolated) = 1.29 W/kg

Configuration_Body_Q5X QT-300 BeltMic Low Band 470-545MHz 250mW/Body Back, P=250mW, d=0mm/Zoom Scan (5x5x7) (7x7x7)/Cube 0: Measurement grid: dx=7.5mm, dy=7.5mm, dz=5mm
Reference Value = 28.04 V/m; Power Drift = 0.20 dB
Peak SAR (extrapolated) = 1.44 W/kg
SAR(1 g) = 0.891 W/kg; SAR(10 g) = 0.575 W/kg (SAR corrected for target medium)
Maximum value of SAR (measured) = 1.06 W/kg

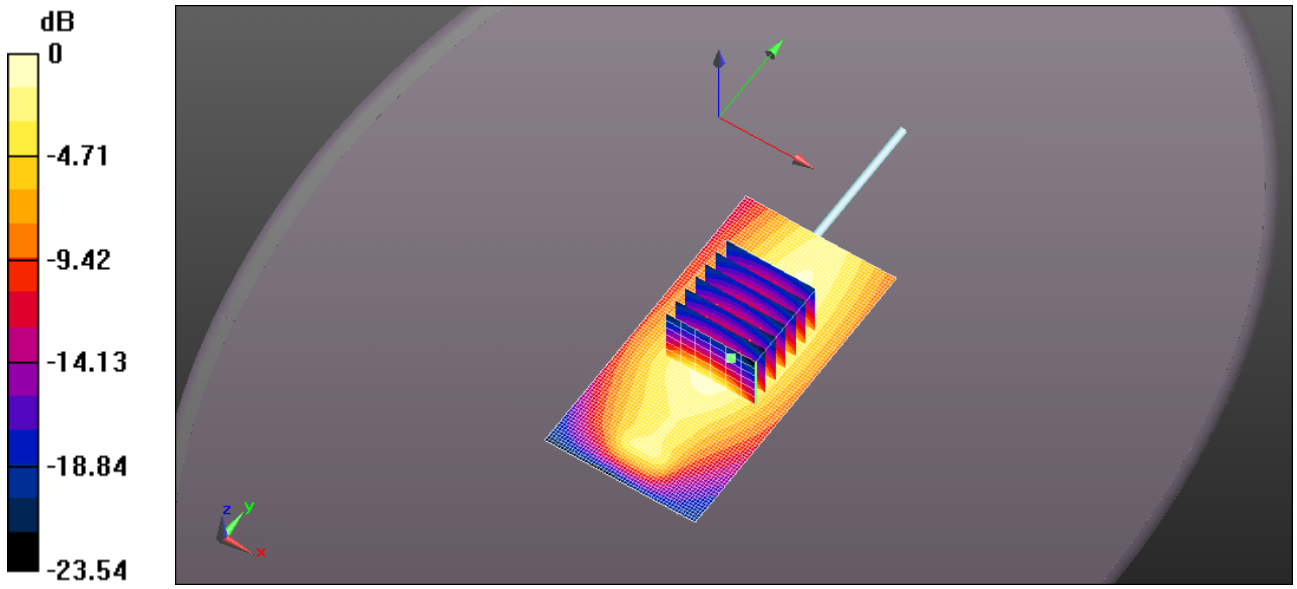

0 dB = 1.29 W/kg = 1.12 dBW/kg

Test Laboratory: Ultratech Group of Labs

FILE NAME: Q5X-065Q QT-300 BELTMIC 508MHZ 250MW FRONT-30054 .DA52:0

DUT: QT-300; Type: UHF Transmitter; Serial: 30054

Communication System: UID 0, CW (0); Frequency: 508 MHz; Duty Cycle: 1:1
Medium parameters used (interpolated): f = 508 MHz; σ = 0.958 S/m; ε_r = 56.963; ρ = 1000 kg/m^3 ;
Phantom section: Flat Section ; Measurement Standard: DASY5 (IEEE/IEC/ANSI C63.19-2007)

DASY Configuration:

- Probe: EX3DV4 - SN3673; ConvF(10.51, 10.51, 10.51); Calibrated: 3/20/2017;
- Sensor-Surface: 1.4mm (Mechanical Surface Detection), Sensor-Surface: 3mm (Mechanical Surface Detection)
- Electronics: DAE4 Sn874; Calibrated: 8/21/2017
- Phantom: ELI 4.0; Type: QD OVA 001 BB; Serial: 1057
- DASY52 52.10.0(1446); SEMCAD X 14.6.10(7417)

Configuration_Body_Q5X QT-300 BeltMic Low Band 470-545MHz 250mW/Body Front, P=250mW, d=0mm/Area Scan (51x131x1): Interpolated grid: dx=1.500 mm, dy=1.500 mm
Maximum value of SAR (interpolated) = 1.99 W/kg

Configuration_Body_Q5X QT-300 BeltMic Low Band 470-545MHz 250mW/Body Front, P=250mW, d=0mm/Zoom Scan (5x5x7) (7x7x7)/Cube 0: Measurement grid: dx=7.5mm, dy=7.5mm, dz=5mm
Reference Value = 14.06 V/m; Power Drift = 0.25 dB
Peak SAR (extrapolated) = 2.10 W/kg
SAR(1 g) = 1.17 W/kg; SAR(10 g) = 0.699 W/kg (SAR corrected for target medium)
Maximum value of SAR (measured) = 1.47 W/kg

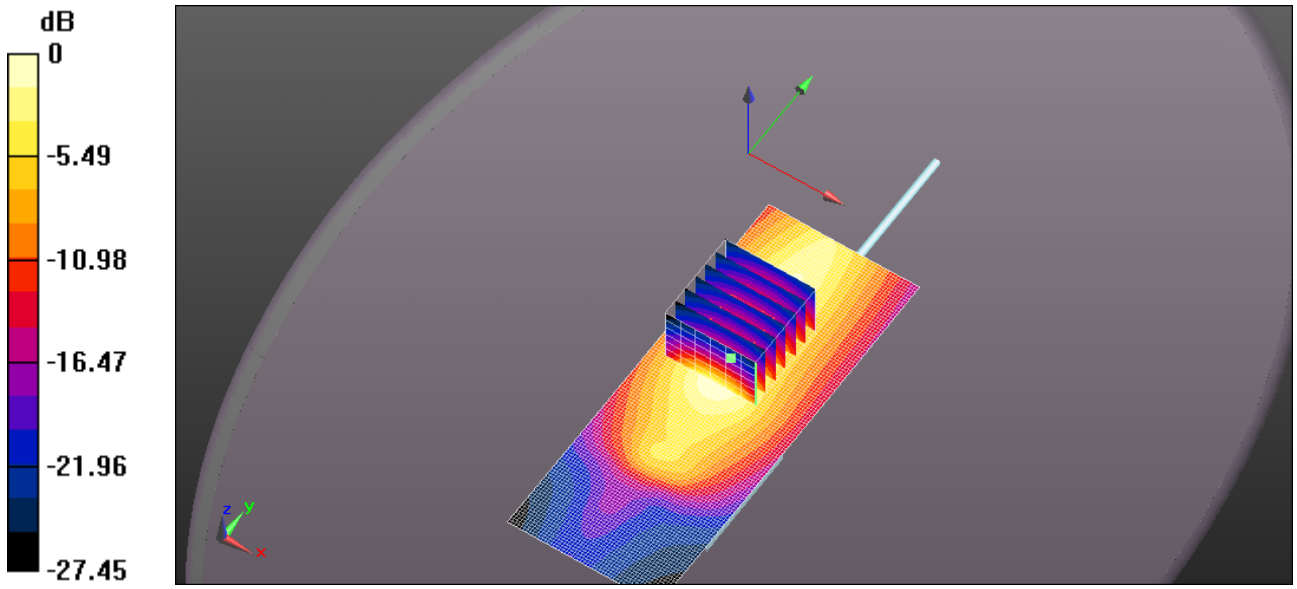

0 dB = 1.99 W/kg = 3.00 dBW/kg

Test Laboratory: Ultratech Group of Labs

FILE NAME: Q5X-065Q QT-300 BELTMIC 526MHZ 250MW FRONT-30054 .DA52:0

DUT: QT-300; Type: UHF Transmitter; Serial: 30054

Communication System: UID 0, CW (0); Frequency: 526 MHz; Duty Cycle: 1:1
Medium parameters used (interpolated): f = 526 MHz; σ = 0.975 S/m; ε_r = 56.757; ρ = 1000 kg/m^3 ;
Phantom section: Flat Section ; Measurement Standard: DASY5 (IEEE/IEC/ANSI C63.19-2007)

DASY Configuration:

- Probe: EX3DV4 - SN3673; ConvF(10.51, 10.51, 10.51); Calibrated: 3/20/2017;
- Sensor-Surface: 1.4mm (Mechanical Surface Detection), Sensor-Surface: 3mm (Mechanical Surface Detection)
- Electronics: DAE4 Sn874; Calibrated: 8/21/2017
- Phantom: ELI 4.0; Type: QD OVA 001 BB; Serial: 1057
- DASY52 52.10.0(1446); SEMCAD X 14.6.10(7417)

Configuration_Body_Q5X QT-300 BeltMic Low Band 470-545MHz 250mW/Body Front, P=250mW, d=0mm/Area Scan (51x131x1): Interpolated grid: dx=1.500 mm, dy=1.500 mm
Maximum value of SAR (interpolated) = 1.67 W/kg

Configuration_Body_Q5X QT-300 BeltMic Low Band 470-545MHz 250mW/Body Front, P=250mW, d=0mm/Zoom Scan (5x5x7) (7x7x7)/Cube 0: Measurement grid: dx=7.5mm, dy=7.5mm, dz=5mm
Reference Value = 11.43 V/m; Power Drift = 0.28 dB
Peak SAR (extrapolated) = 1.94 W/kg
SAR(1 g) = 1.07 W/kg; SAR(10 g) = 0.638 W/kg (SAR corrected for target medium)
Maximum value of SAR (measured) = 1.33 W/kg

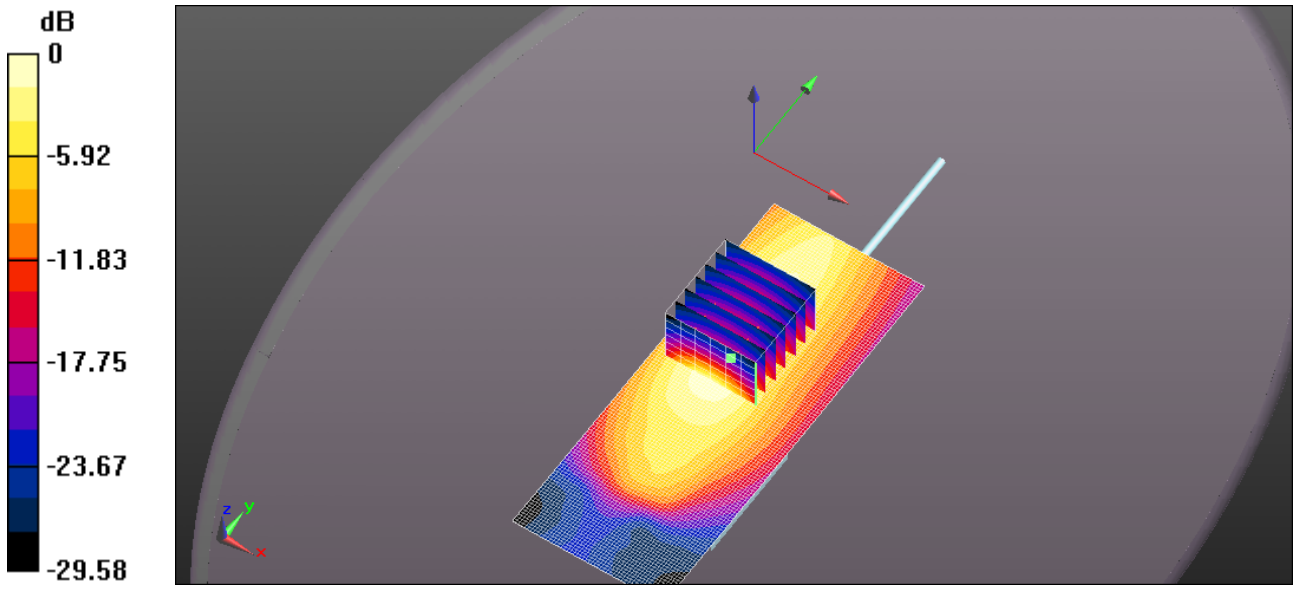

0 dB = 1.67 W/kg = 2.24 dBW/kg

Test Laboratory: Ultratech Group of Labs

FILE NAME: ***Q5X-065Q QT-300 BELTMIC 545MHZ 250MW FRONT-30054 .DA52:0***

DUT: QT-300; Type: UHF Transmitter; Serial: 30054

Communication System: UID 0, CW (0); Frequency: 545 MHz; Duty Cycle: 1:1
Medium parameters used (extrapolated): f = 545 MHz; σ = 0.991 S/m; ε_r = 56.57; ρ = 1000 kg/m^3 ; Phantom section: Flat Section ; Measurement Standard: DASY5 (IEEE/IEC/ANSI C63.19-2007)

DASY Configuration:

- Probe: EX3DV4 - SN3673; ConvF(10.51, 10.51, 10.51); Calibrated: 3/20/2017;
- Sensor-Surface: 1.4mm (Mechanical Surface Detection), Sensor-Surface: 3mm (Mechanical Surface Detection)
- Electronics: DAE4 Sn874; Calibrated: 8/21/2017
- Phantom: ELI 4.0; Type: QD OVA 001 BB; Serial: 1057
- DASY52 52.10.0(1446); SEMCAD X 14.6.10(7417)

Configuration_Body_Q5X QT-300 BeltMic Low Band 470-545MHz 250mW/Body Front, P=250mW, d=0mm/Area Scan (51x131x1): Interpolated grid: dx=1.500 mm, dy=1.500 mm
Maximum value of SAR (interpolated) = 1.12 W/kg

Configuration_Body_Q5X QT-300 BeltMic Low Band 470-545MHz 250mW/Body Front, P=250mW, d=0mm/Zoom Scan (5x5x7) (7x7x7)/Cube 0: Measurement grid: dx=7.5mm, dy=7.5mm, dz=5mm
Reference Value = 9.215 V/m; Power Drift = 0.24 dB
Peak SAR (extrapolated) = 1.39 W/kg
SAR(1 g) = 0.750 W/kg; SAR(10 g) = 0.447 W/kg (SAR corrected for target medium)
Maximum value of SAR (measured) = 0.952 W/kg

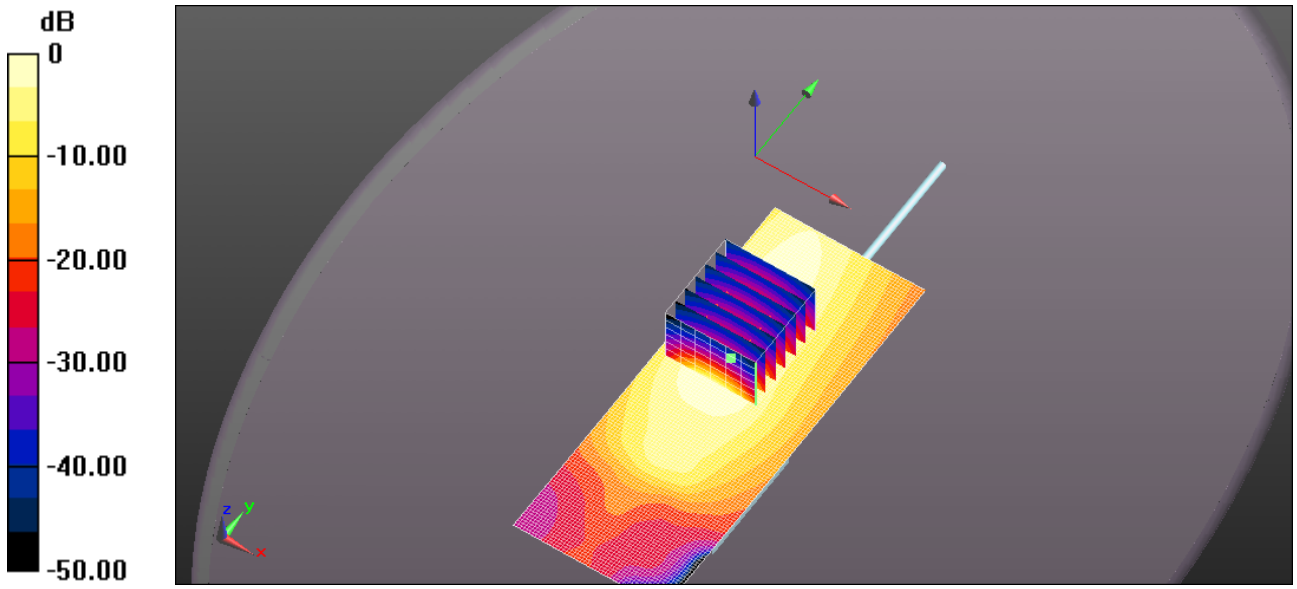

0 dB = 1.12 W/kg = 0.51 dBW/kg

Test Laboratory: Ultratech Group of Labs

FILE NAME: Q5X-065Q QT-300 AQUAMIC 470MHZ 250MW FRONT .DA52:0

DUT: QT-300 AquaMic; Type: UHF Transmitter; Serial: 30055

Communication System: UID 0, CW (0); Frequency: 470 MHz; Duty Cycle: 1:1
Medium parameters used: f = 470 MHz; σ = 0.929 S/m; ε_r = 57.603; ρ = 1000 kg/m^3 ; Phantom section: Flat Section ; Measurement Standard: DASY5 (IEEE/IEC/ANSI C63.19-2007)

DASY Configuration:

- Probe: EX3DV4 - SN3673; ConvF(10.51, 10.51, 10.51); Calibrated: 3/20/2017;
- Sensor-Surface: 1.4mm (Mechanical Surface Detection), Sensor-Surface: 3mm (Mechanical Surface Detection)
- Electronics: DAE4 Sn874; Calibrated: 8/21/2017
- Phantom: ELI 4.0; Type: QD OVA 001 BB; Serial: 1057
- DASY52 52.10.0(1446); SEMCAD X 14.6.10(7417)

Configuration_Body_Q5X QT-300 AquaMic Low Band 470-545MHz 250mW/Body Front, P=250mW, d=0mm/Area Scan (51x131x1): Interpolated grid: dx=1.500 mm, dy=1.500 mm
Maximum value of SAR (interpolated) = 2.11 W/kg

Configuration_Body_Q5X QT-300 AquaMic Low Band 470-545MHz 250mW/Body Front, P=250mW, d=0mm/Zoom Scan (5x5x7) (7x7x7)/Cube 0: Measurement grid: dx=7.5mm, dy=7.5mm, dz=5mm
Reference Value = 17.07 V/m; Power Drift = 0.25 dB
Peak SAR (extrapolated) = 2.19 W/kg
SAR(1 g) = 1.33 W/kg; SAR(10 g) = 0.831 W/kg (SAR corrected for target medium)
Maximum value of SAR (measured) = 1.59 W/kg

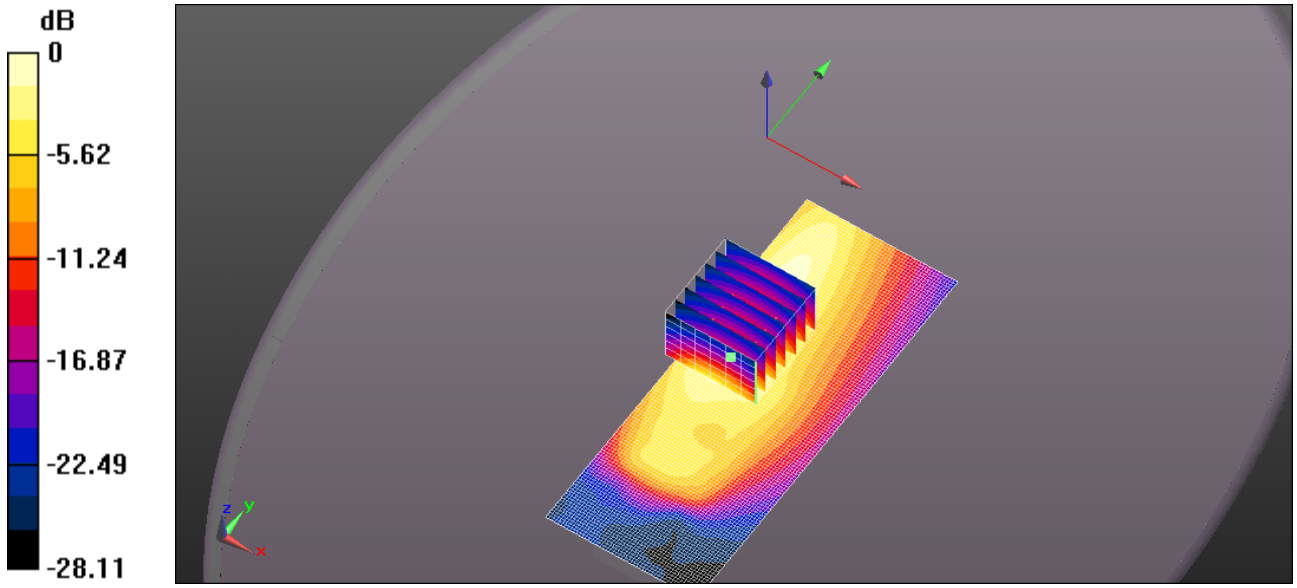

0 dB = 2.11 W/kg = 3.23 dBW/kg

Test Laboratory: Ultratech Group of Labs

FILE NAME: Q5X-065Q QT-300 AQUAMIC 489MHZ 250MW FRONT .DA52:0

DUT: QT-300 AquaMic; Type: UHF Transmitter; Serial: 30055

Communication System: UID 0, CW (0); Frequency: 489 MHz; Duty Cycle: 1:1
Medium parameters used (interpolated): f = 489 MHz; σ = 0.943 S/m; ε_r = 57.254; ρ = 1000 kg/m^3 ;
Phantom section: Flat Section ; Measurement Standard: DASY5 (IEEE/IEC/ANSI C63.19-2007)

DASY Configuration:

- Probe: EX3DV4 - SN3673; ConvF(10.51, 10.51, 10.51); Calibrated: 3/20/2017;
- Sensor-Surface: 1.4mm (Mechanical Surface Detection), Sensor-Surface: 3mm (Mechanical Surface Detection)
- Electronics: DAE4 Sn874; Calibrated: 8/21/2017
- Phantom: ELI 4.0; Type: QD OVA 001 BB; Serial: 1057
- DASY52 52.10.0(1446); SEMCAD X 14.6.10(7417)

Configuration_Body_Q5X QT-300 AquaMic Low Band 470-545MHz 250mW/Body Front, P=250mW, d=0mm/Area Scan (51x131x1): Interpolated grid: dx=1.500 mm, dy=1.500 mm
Maximum value of SAR (interpolated) = 2.45 W/kg

Configuration_Body_Q5X QT-300 AquaMic Low Band 470-545MHz 250mW/Body Front, P=250mW, d=0mm/Zoom Scan (5x5x7) (7x7x7)/Cube 0: Measurement grid: dx=7.5mm, dy=7.5mm, dz=5mm
Reference Value = 16.65 V/m; Power Drift = 0.24 dB
Peak SAR (extrapolated) = 2.42 W/kg
SAR(1 g) = 1.44 W/kg; SAR(10 g) = 0.898 W/kg (SAR corrected for target medium).
Maximum value of SAR (measured) = 1.75 W/kg

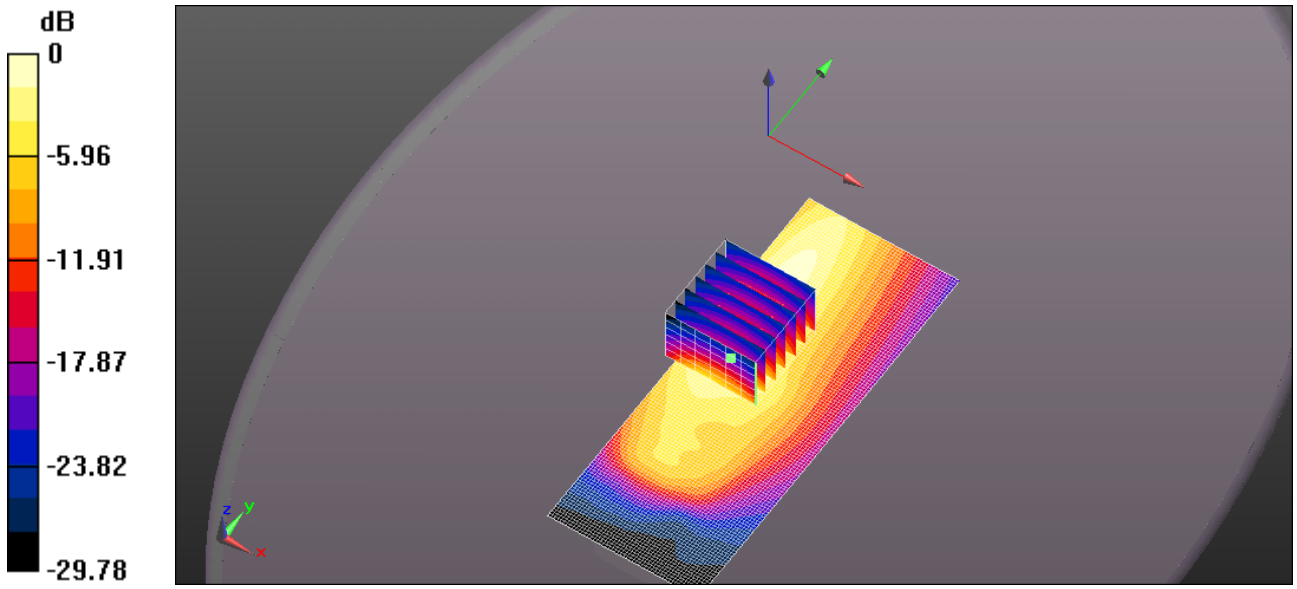

0 dB = 2.45 W/kg = 3.89 dBW/kg

Test Laboratory: Ultratech Group of Labs

FILE NAME: ***Q5X-065Q QT-300 AQUAMIC 489MHZ 250MW BACK-30055 .DA52:0***

DUT: QT-300; Type: UHF Transmitter; Serial: 30034

Communication System: UID 0, CW (0); Frequency: 489 MHz; Duty Cycle: 1:1
Medium parameters used (interpolated): f = 489 MHz; σ = 0.943 S/m; ε_r = 57.254; ρ = 1000 kg/m^3 ;
Phantom section: Flat Section ; Measurement Standard: DASY5 (IEEE/IEC/ANSI C63.19-2007)

DASY Configuration:

- Probe: EX3DV4 - SN3673; ConvF(10.51, 10.51, 10.51); Calibrated: 3/20/2017;
- Sensor-Surface: 1.4mm (Mechanical Surface Detection), Sensor-Surface: 3mm (Mechanical Surface Detection)
- Electronics: DAE4 Sn874; Calibrated: 8/21/2017
- Phantom: ELI 4.0; Type: QD OVA 001 BB; Serial: 1057
- DASY52 52.10.0(1446); SEMCAD X 14.6.10(7417)

Configuration_Body_Q5X QT-300 AquaMic Low Band 470-545MHz 250mW/Body Back, P=250mW, d=0mm/Area Scan (41x131x1): Interpolated grid: dx=1.500 mm, dy=1.500 mm
Maximum value of SAR (interpolated) = 1.51 W/kg

Configuration_Body_Q5X QT-300 AquaMic Low Band 470-545MHz 250mW/Body Back, P=250mW, d=0mm/Zoom Scan (5x5x7) (7x7x7)/Cube 0: Measurement grid: dx=7.5mm, dy=7.5mm, dz=5mm
Reference Value = 37.03 V/m; Power Drift = 0.13 dB
Peak SAR (extrapolated) = 1.51 W/kg
SAR(1 g) = 0.959 W/kg; SAR(10 g) = 0.624 W/kg (SAR corrected for target medium)
Maximum value of SAR (measured) = 1.12 W/kg

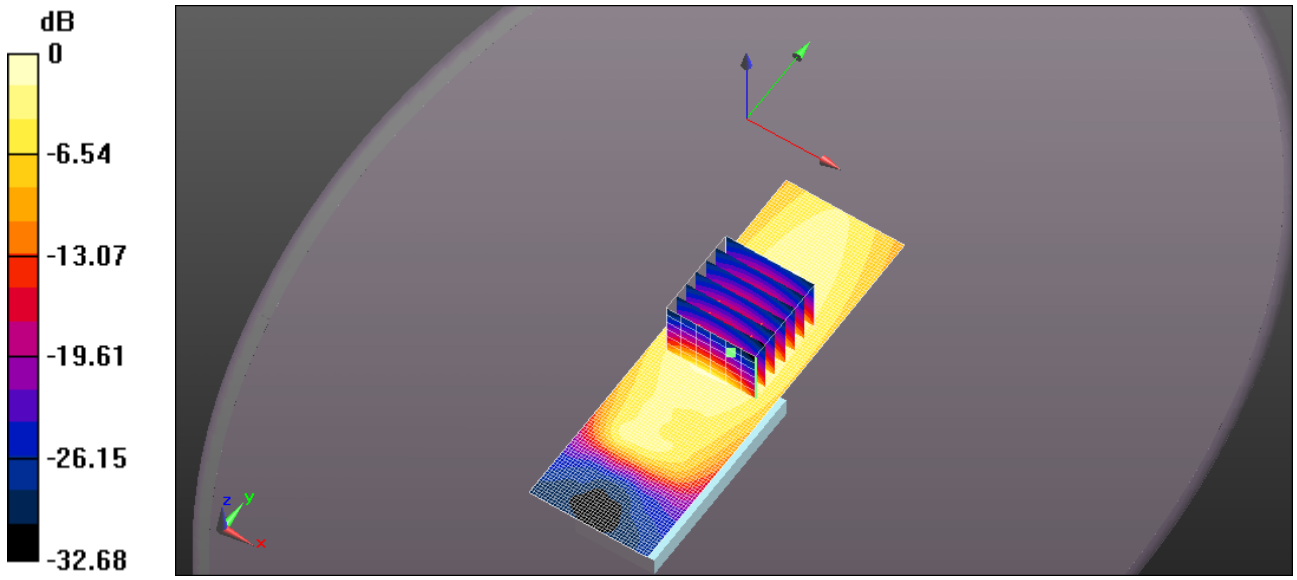

0 dB = 1.51 W/kg = 1.78 dBW/kg

Test Laboratory: Ultratech Group of Labs

FILE NAME: Q5X-065Q QT-300 AQUAMIC 508MHZ 250MW FRONT .DA52:0

DUT: QT-300 AquaMic; Type: UHF Transmitter; Serial: 30055

Communication System: UID 0, CW (0); Frequency: 508 MHz; Duty Cycle: 1:1
Medium parameters used (interpolated): f = 508 MHz; σ = 0.958 S/m; ε_r = 56.963; ρ = 1000 kg/m^3 ;
Phantom section: Flat Section ; Measurement Standard: DASY5 (IEEE/IEC/ANSI C63.19-2007)

DASY Configuration:

- Probe: EX3DV4 - SN3673; ConvF(10.51, 10.51, 10.51); Calibrated: 3/20/2017;
- Sensor-Surface: 1.4mm (Mechanical Surface Detection), Sensor-Surface: 3mm (Mechanical Surface Detection)
- Electronics: DAE4 Sn874; Calibrated: 8/21/2017
- Phantom: ELI 4.0; Type: QD OVA 001 BB; Serial: 1057
- DASY52 52.10.0(1446); SEMCAD X 14.6.10(7417)

Configuration_Body_Q5X QT-300 AquaMic Low Band 470-545MHz 250mW/Body Front, P=250mW, d=0mm/Area Scan (51x131x1): Interpolated grid: dx=1.500 mm, dy=1.500 mm.
Maximum value of SAR (interpolated) = 2.08 W/kg

Configuration_Body_Q5X QT-300 AquaMic Low Band 470-545MHz 250mW/Body Front, P=250mW, d=0mm/Zoom Scan (5x5x7) (7x7x7)/Cube 0: Measurement grid: dx=7.5mm, dy=7.5mm, dz=5mm
Reference Value = 14.12 V/m; Power Drift = 0.25 dB
Peak SAR (extrapolated) = 2.13 W/kg
SAR(1 g) = 1.25 W/kg; SAR(10 g) = 0.776 W/kg (SAR corrected for target medium)
Maximum value of SAR (measured) = 1.54 W/kg

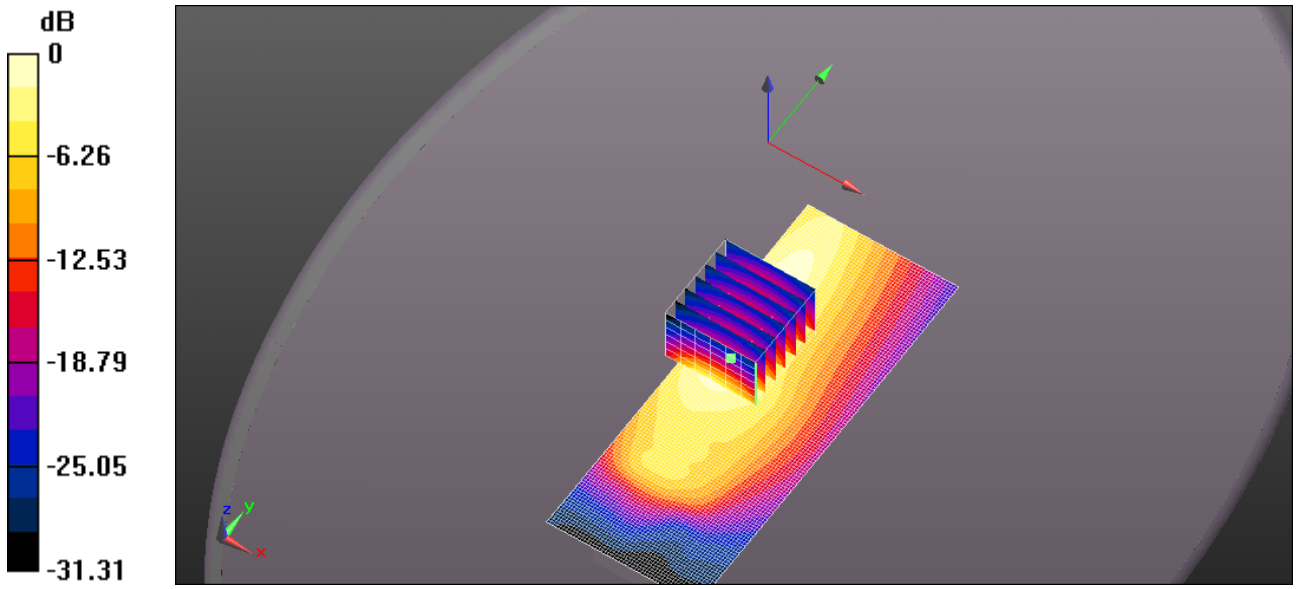

0 dB = 2.08 W/kg = 3.18 dBW/kg

Test Laboratory: Ultratech Group of Labs

FILE NAME: Q5X-065Q QT-300 AQUAMIC 526MHZ 250MW FRONT .DA52:0

DUT: QT-300; Type: UHF Transmitter; Serial: 30034

Communication System: UID 0, CW (0); Frequency: 526 MHz; Duty Cycle: 1:1
Medium parameters used (interpolated): f = 526 MHz; σ = 0.975 S/m; ε_r = 56.757; ρ = 1000 kg/m^3 ;
Phantom section: Flat Section ; Measurement Standard: DASY5 (IEEE/IEC/ANSI C63.19-2007)

DASY Configuration:

- Probe: EX3DV4 - SN3673; ConvF(10.51, 10.51, 10.51); Calibrated: 3/20/2017;
- Sensor-Surface: 1.4mm (Mechanical Surface Detection), Sensor-Surface: 3mm (Mechanical Surface Detection)
- Electronics: DAE4 Sn874; Calibrated: 8/21/2017
- Phantom: ELI 4.0; Type: QD OVA 001 BB; Serial: 1057
- DASY52 52.10.0(1446); SEMCAD X 14.6.10(7417)

Configuration_Body_Q5X QT-300 AquaMic Low Band 470-545MHz 250mW/Body Front, P=250mW, d=0mm/Area Scan (51x131x1): Interpolated grid: dx=1.500 mm, dy=1.500 mm
Maximum value of SAR (interpolated) = 1.75 W/kg

Configuration_Body_Q5X QT-300 AquaMic Low Band 470-545MHz 250mW/Body Front, P=250mW, d=0mm/Zoom Scan (5x5x7) (7x8x7)/Cube 0: Measurement grid: dx=7.5mm, dy=7.5mm, dz=5mm
Reference Value = 13.74 V/m; Power Drift = 0.26 dB
Peak SAR (extrapolated) = 1.77 W/kg
SAR(1 g) = 1.03 W/kg; SAR(10 g) = 0.638 W/kg (SAR corrected for target medium)
Maximum value of SAR (measured) = 1.28 W/kg

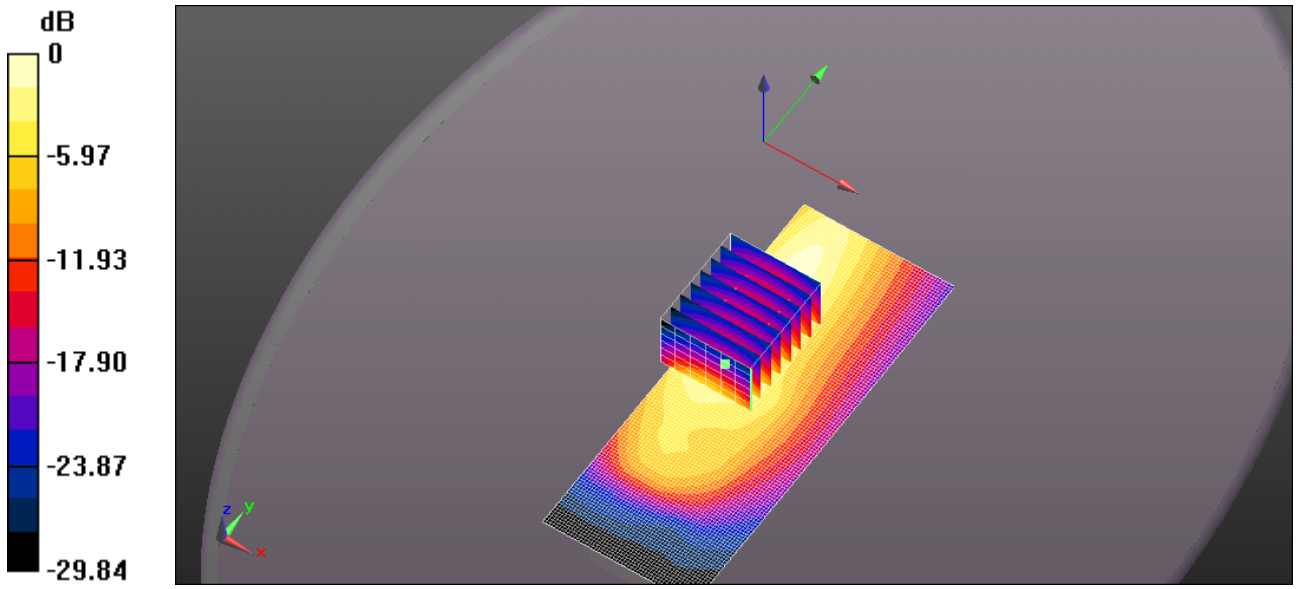

0 dB = 1.75 W/kg = 2.44 dBW/kg

Test Laboratory: Ultratech Group of Labs

FILE NAME: Q5X-065Q QT-300 AQUAMIC 545MHZ 250MW FRONT .DA52:0

DUT: QT-300; Type: UHF Transmitter; Serial: 30034

Communication System: UID 0, CW (0); Frequency: 545 MHz; Duty Cycle: 1:1
Medium parameters used (extrapolated): f = 545 MHz; σ = 0.991 S/m; ε_r = 56.57; ρ = 1000 kg/m^3 ; Phantom section: Flat Section ; Measurement Standard: DASY5 (IEEE/IEC/ANSI C63.19-2007)

DASY Configuration:

- Probe: EX3DV4 - SN3673; ConvF(10.51, 10.51, 10.51); Calibrated: 3/20/2017;
- Sensor-Surface: 1.4mm (Mechanical Surface Detection), Sensor-Surface: 3mm (Mechanical Surface Detection)
- Electronics: DAE4 Sn874; Calibrated: 8/21/2017
- Phantom: ELI 4.0; Type: QD OVA 001 BB; Serial: 1057
- DASY52 52.10.0(1446); SEMCAD X 14.6.10(7417)

Configuration_Body_Q5X QT-300 AquaMic Low Band 470-545MHz 250mW/Body Front, P=250mW, d=0mm/Area Scan (51x131x1): Interpolated grid: dx=1.500 mm, dy=1.500 mm
Maximum value of SAR (interpolated) = 1.38 W/kg

Configuration_Body_Q5X QT-300 AquaMic Low Band 470-545MHz 250mW/Body Front, P=250mW, d=0mm/Zoom Scan (5x5x7) (7x9x7)/Cube 0: Measurement grid: dx=7.5mm, dy=7.5mm, dz=5mm
Reference Value = 11.19 V/m; Power Drift = 0.28 dB
Peak SAR (extrapolated) = 1.38 W/kg
SAR(1 g) = 0.792 W/kg; SAR(10 g) = 0.493 W/kg (SAR corrected for target medium)
Maximum value of SAR (measured) = 0.994 W/kg

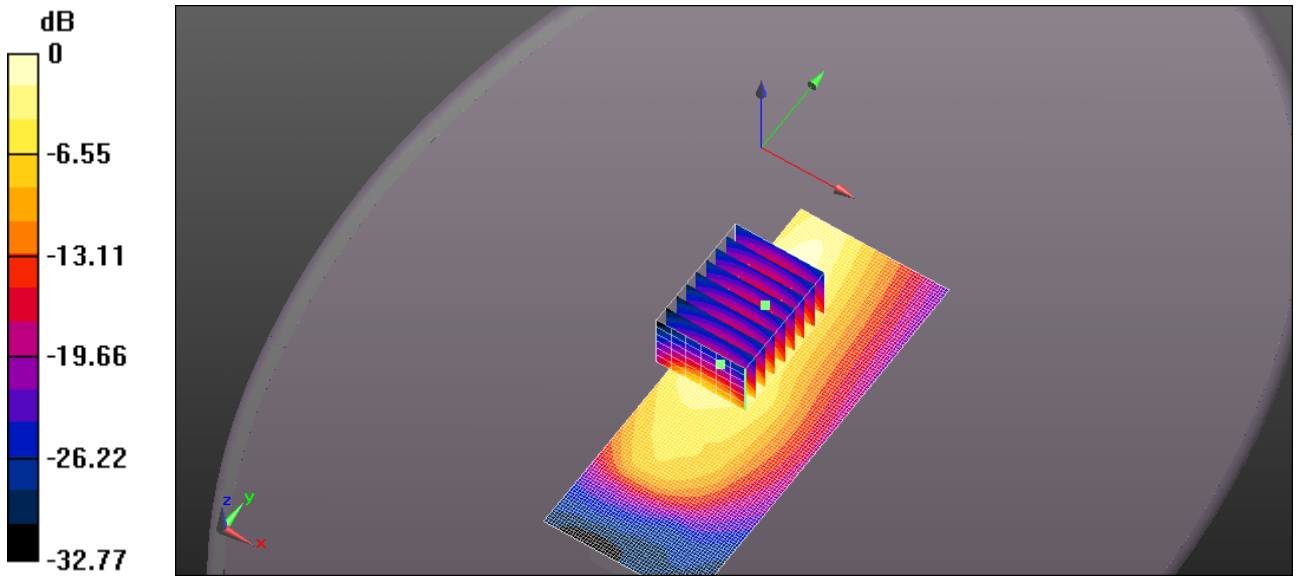

0 dB = 1.38 W/kg = 1.40 dBW/kg

Test Laboratory: Ultratech Group of Labs

FILE NAME: Q5X-065Q QT-300 INCOGNITO 470MHZ 250MW FRONT .DA52:0

DUT: QT-300 Incognito; Type: UHF Transmitter; Serial: 30053

Communication System: UID 0, CW (0); Frequency: 470 MHz; Duty Cycle: 1:1
Medium parameters used: f = 470 MHz; σ = 0.929 S/m; ε_r = 57.603; ρ = 1000 kg/m^3 ; Phantom section: Flat Section ; Measurement Standard: DASY5 (IEEE/IEC/ANSI C63.19-2007)

DASY Configuration:

- Probe: EX3DV4 - SN3673; ConvF(10.51, 10.51, 10.51); Calibrated: 3/20/2017;
- Sensor-Surface: 1.4mm (Mechanical Surface Detection), Sensor-Surface: 3mm (Mechanical Surface Detection)
- Electronics: DAE4 Sn874; Calibrated: 8/21/2017
- Phantom: ELI 4.0; Type: QD OVA 001 BB; Serial: 1057
- DASY52 52.10.0(1446); SEMCAD X 14.6.10(7417)

Configuration_Body_Q5X QT-300 Incognito Low Band 470-545MHz 250mW/Body Front, P=250mW, d=0mm/Area Scan (41x131x1): Interpolated grid: dx=1.500 mm, dy=1.500 mm
Maximum value of SAR (interpolated) = 1.71 W/kg

Configuration_Body_Q5X QT-300 Incognito Low Band 470-545MHz 250mW/Body Front, P=250mW, d=0mm/Zoom Scan (5x5x7) (7x7x7)/Cube 0: Measurement grid: dx=7.5mm, dy=7.5mm, dz=5mm
Reference Value = 34.44 V/m; Power Drift = 0.21 dB
Peak SAR (extrapolated) = 1.83 W/kg
SAR(1 g) = 0.997 W/kg; SAR(10 g) = 0.574 W/kg (SAR corrected for target medium)
Maximum value of SAR (measured) = 1.23 W/kg

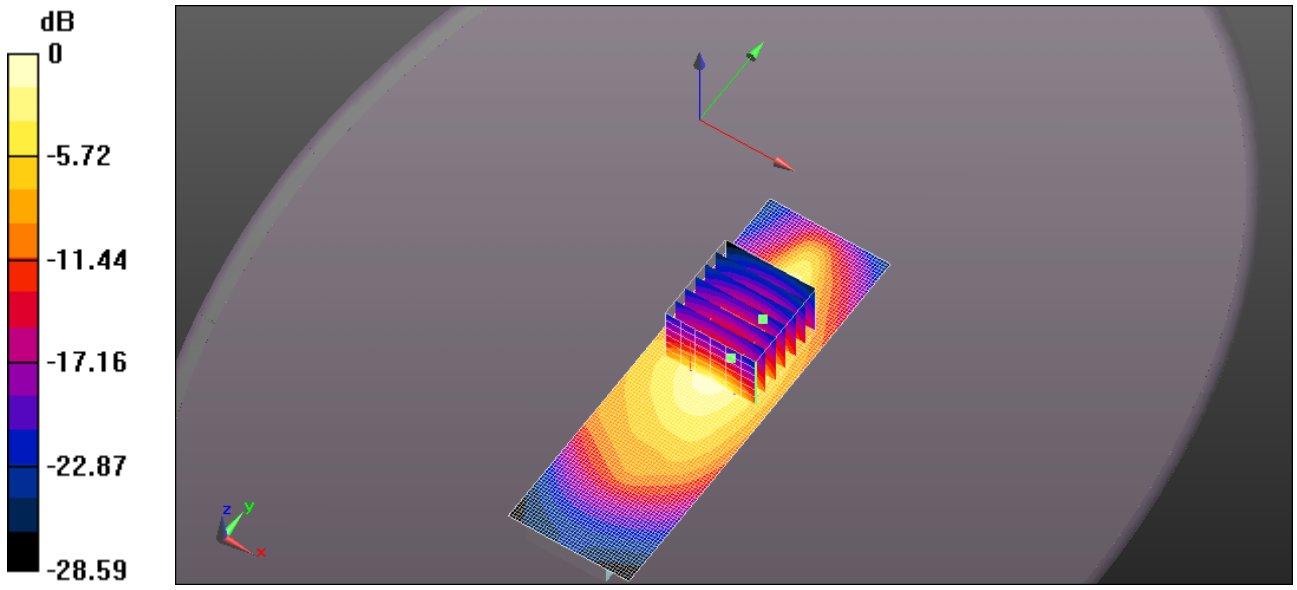

0 dB = 1.71 W/kg = 2.34 dBW/kg

Test Laboratory: Ultratech Group of Labs

FILE NAME: Q5X-065Q QT-300 INCOGNITO 489MHZ 250MW FRONT .DA52:0

DUT: QT-300 Incognito; Type: UHF Transmitter; Serial: 30053

Communication System: UID 0, CW (0); Frequency: 489 MHz; Duty Cycle: 1:1
Medium parameters used (interpolated): f = 489 MHz; σ = 0.943 S/m; ε_r = 57.254; ρ = 1000 kg/m^3 ;
Phantom section: Flat Section ; Measurement Standard: DASY5 (IEEE/IEC/ANSI C63.19-2007)

DASY Configuration:

- Probe: EX3DV4 - SN3673; ConvF(10.51, 10.51, 10.51); Calibrated: 3/20/2017;
- Sensor-Surface: 1.4mm (Mechanical Surface Detection), Sensor-Surface: 3mm (Mechanical Surface Detection)
- Electronics: DAE4 Sn874; Calibrated: 8/21/2017
- Phantom: ELI 4.0; Type: QD OVA 001 BB; Serial: 1057
- DASY52 52.10.0(1446); SEMCAD X 14.6.10(7417)

Configuration_Body_Q5X QT-300 Incognito Low Band 470-545MHz 250mW/Body Front, P=250mW, d=0mm/Area Scan (41x131x1): Interpolated grid: dx=1.500 mm, dy=1.500 mm
Maximum value of SAR (interpolated) = 1.24 W/kg

Configuration_Body_Q5X QT-300 Incognito Low Band 470-545MHz 250mW/Body Front, P=250mW, d=0mm/Zoom Scan (5x5x7) (7x8x7)/Cube 0: Measurement grid: dx=7.5mm, dy=7.5mm, dz=5mm
Reference Value = 33.17 V/m; Power Drift = 0.14 dB
Peak SAR (extrapolated) = 1.47 W/kg
SAR(1 g) = 0.773 W/kg; SAR(10 g) = 0.440 W/kg (SAR corrected for target medium)
Maximum value of SAR (measured) = 0.959 W/kg

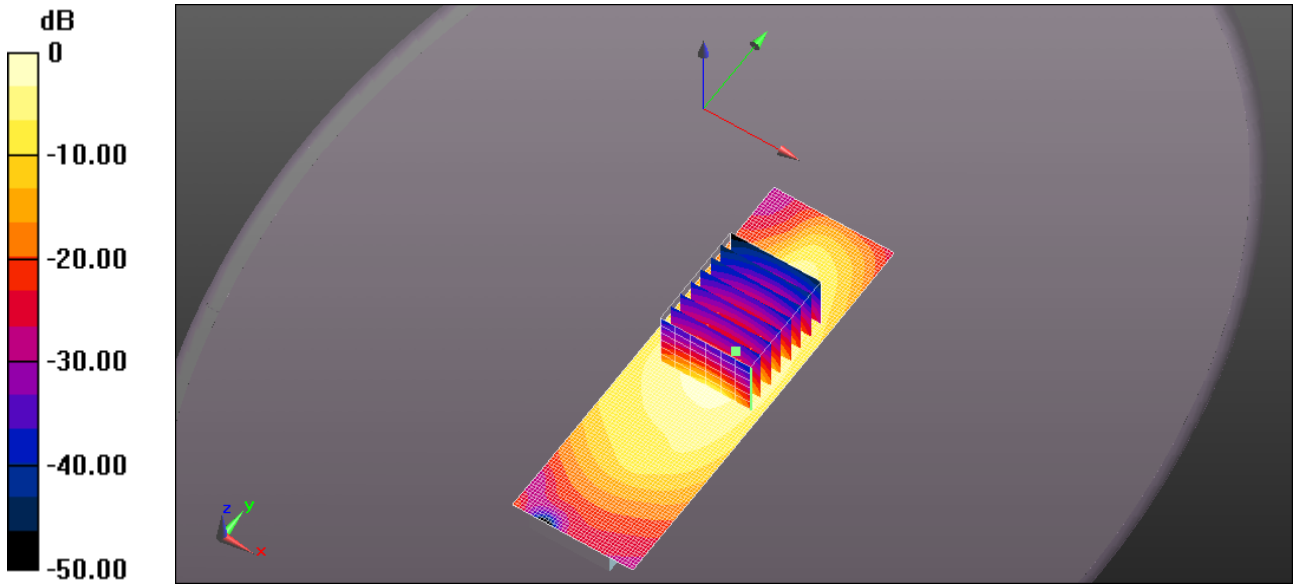

0 dB = 1.24 W/kg = 0.95 dBW/kg

Test Laboratory: Ultratech Group of Labs

FILE NAME: Q5X-065Q QT-300 INCOGNITO 508MHZ 250MW FRONT .DA52:0

DUT: QT-300 Incognito; Type: UHF Transmitter; Serial: 30053

Communication System: UID 0, CW (0); Frequency: 508 MHz; Duty Cycle: 1:1
Medium parameters used (interpolated): f = 508 MHz; σ = 0.958 S/m; ε_r = 56.963; ρ = 1000 kg/m^3 ;
Phantom section: Flat Section ; Measurement Standard: DASY5 (IEEE/IEC/ANSI C63.19-2007)

DASY Configuration:

- Probe: EX3DV4 - SN3673; ConvF(10.51, 10.51, 10.51); Calibrated: 3/20/2017;
- Sensor-Surface: 1.4mm (Mechanical Surface Detection), Sensor-Surface: 3mm (Mechanical Surface Detection)
- Electronics: DAE4 Sn874; Calibrated: 8/21/2017
- Phantom: ELI 4.0; Type: QD OVA 001 BB; Serial: 1057
- DASY52 52.10.0(1446); SEMCAD X 14.6.10(7417)

Configuration_Body_Q5X QT-300 Incognito Low Band 470-545MHz 250mW/Body Front, P=250mW, d=0mm/Area Scan (41x131x1): Interpolated grid: dx=1.500 mm, dy=1.500 mm
Maximum value of SAR (interpolated) = 1.26 W/kg

Configuration_Body_Q5X QT-300 Incognito Low Band 470-545MHz 250mW/Body Front, P=250mW, d=0mm/Zoom Scan (5x5x7) (7x7x7)/Cube 0: Measurement grid: dx=7.5mm, dy=7.5mm, dz=5mm
Reference Value = 37.18 V/m; Power Drift = 0.11 dB
Peak SAR (extrapolated) = 1.59 W/kg
SAR(1 g) = 0.861 W/kg; SAR(10 g) = 0.500 W/kg (SAR corrected for target medium)
Maximum value of SAR (measured) = 1.09 W/kg

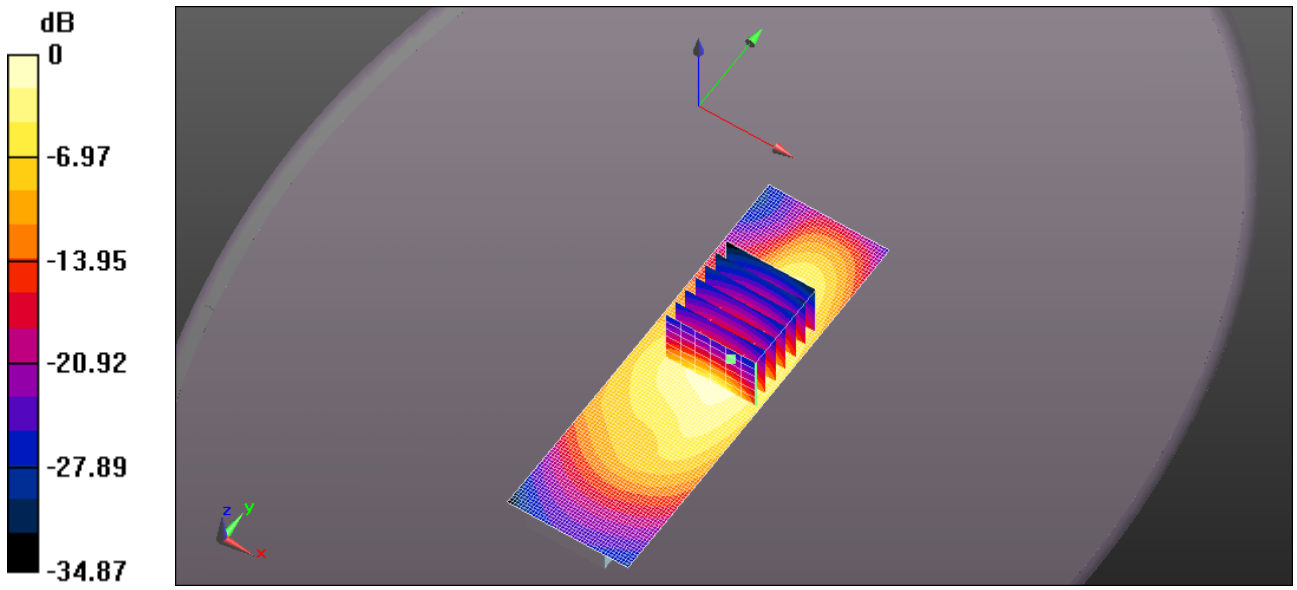

0 dB = 1.26 W/kg = 1.00 dBW/kg

Test Laboratory: Ultratech Group of Labs

FILE NAME: Q5X-065Q QT-300 INCOGNITO 526MHZ 250MW FRONT .DA52:0

DUT: QT-300 Incognito; Type: UHF Transmitter; Serial: 30053

Communication System: UID 0, CW (0); Frequency: 526 MHz; Duty Cycle: 1:1
Medium parameters used (interpolated): f = 526 MHz; σ = 0.975 S/m; ε_r = 56.757; ρ = 1000 kg/m^3 ;
Phantom section: Flat Section ; Measurement Standard: DASY5 (IEEE/IEC/ANSI C63.19-2007)

DASY Configuration:

- Probe: EX3DV4 - SN3673; ConvF(10.51, 10.51, 10.51); Calibrated: 3/20/2017;
- Sensor-Surface: 1.4mm (Mechanical Surface Detection), Sensor-Surface: 3mm (Mechanical Surface Detection)
- Electronics: DAE4 Sn874; Calibrated: 8/21/2017
- Phantom: ELI 4.0; Type: QD OVA 001 BB; Serial: 1057
- DASY52 52.10.0(1446); SEMCAD X 14.6.10(7417)

Configuration_Body_Q5X QT-300 Incognito Low Band 470-545MHz 250mW/Body Front, P=250mW, d=0mm/Area Scan (41x131x1): Interpolated grid: dx=1.500 mm, dy=1.500 mm
Maximum value of SAR (interpolated) = 1.80 W/kg

Configuration_Body_Q5X QT-300 Incognito Low Band 470-545MHz 250mW/Body Front, P=250mW, d=0mm/Zoom Scan (5x5x7) (7x7x7)/Cube 0: Measurement grid: dx=7.5mm, dy=7.5mm, dz=5mm
Reference Value = 28.66 V/m; Power Drift = 0.22 dB
Peak SAR (extrapolated) = 2.11 W/kg
SAR(1 g) = 1.11 W/kg; SAR(10 g) = 0.627 W/kg (SAR corrected for target medium)
Maximum value of SAR (measured) = 1.39 W/kg

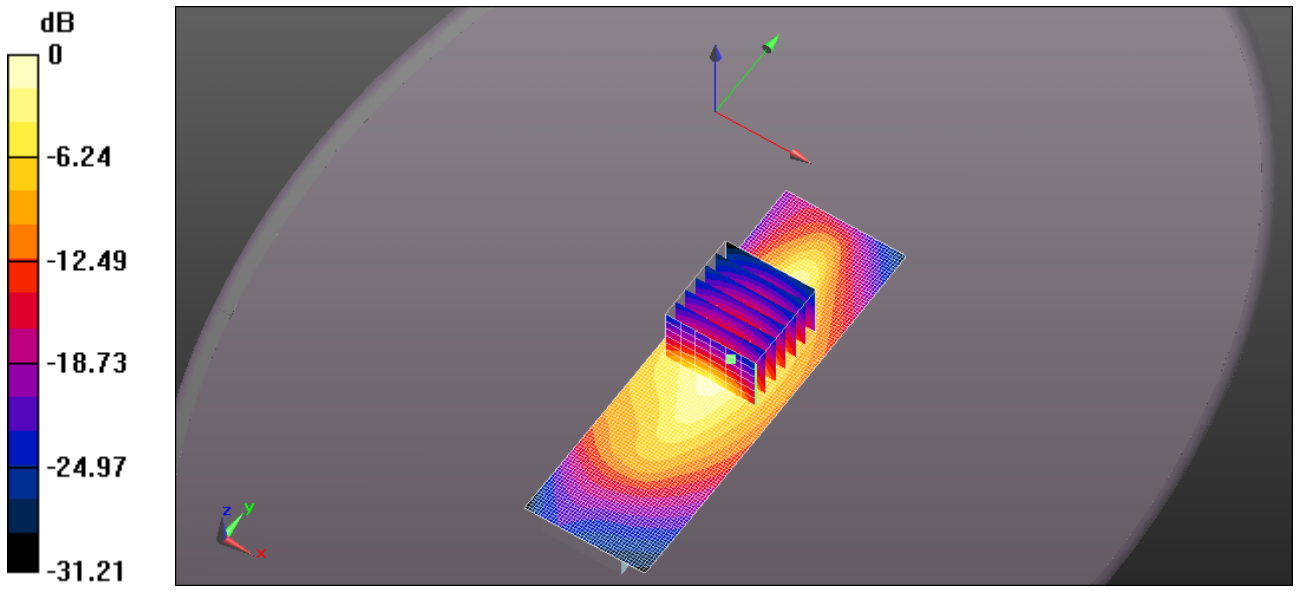

0 dB = 1.80 W/kg = 2.56 dBW/kg

Test Laboratory: Ultratech Group of Labs

FILE NAME: ***Q5X-065Q QT-300 INCOGNITO 526MHZ 250MW BACK-30053 .DA52:0***

DUT: QT-300; Type: UHF Transmitter; Serial: 30053

Communication System: UID 0, CW (0); Frequency: 526 MHz; Duty Cycle: 1:1
Medium parameters used (interpolated): f = 526 MHz; σ = 0.975 S/m; ε_r = 56.757; ρ = 1000 kg/m^3 ;
Phantom section: Flat Section ; Measurement Standard: DASY5 (IEEE/IEC/ANSI C63.19-2007)

DASY Configuration:

- Probe: EX3DV4 - SN3673; ConvF(10.51, 10.51, 10.51); Calibrated: 3/20/2017;
- Sensor-Surface: 1.4mm (Mechanical Surface Detection), Sensor-Surface: 3mm (Mechanical Surface Detection)
- Electronics: DAE4 Sn874; Calibrated: 8/21/2017
- Phantom: ELI 4.0; Type: QD OVA 001 BB; Serial: 1057
- DASY52 52.10.0(1446); SEMCAD X 14.6.10(7417)

Configuration_Body_Q5X QT-300 Incognito Low Band 470-545MHz 250mW/Body Back, P=250mW, d=0mm/Area Scan (71x131x1): Interpolated grid: dx=1.500 mm, dy=1.500 mm
Maximum value of SAR (interpolated) = 1.47 W/kg

Configuration_Body_Q5X QT-300 Incognito Low Band 470-545MHz 250mW/Body Back, P=250mW, d=0mm/Zoom Scan (5x5x7) (7x7x7)/Cube 0: Measurement grid: dx=7.5mm, dy=7.5mm, dz=5mm
Reference Value = 3.927 V/m; Power Drift = 0.33 dB
Peak SAR (extrapolated) = 1.74 W/kg
SAR(1 g) = 0.980 W/kg; SAR(10 g) = 0.586 W/kg (SAR corrected for target medium)
Maximum value of SAR (measured) = 1.23 W/kg

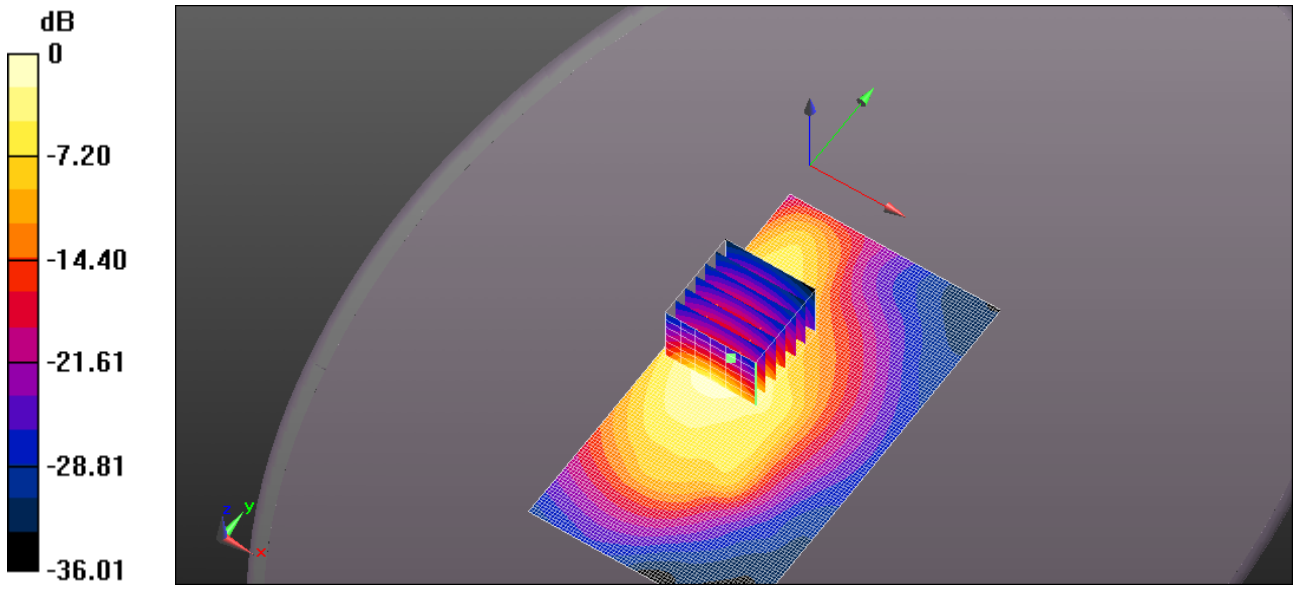

0 dB = 1.47 W/kg = 1.66 dBW/kg

Test Laboratory: Ultratech Group of Labs

FILE NAME: Q5X-065Q QT-300 INCOGNITO 545MHZ 250MW FRONT .DA52:0

DUT: QT-300 Incognito; Type: UHF Transmitter; Serial: 30053

Communication System: UID 0, CW (0); Frequency: 545 MHz; Duty Cycle: 1:1
Medium parameters used (extrapolated): f = 545 MHz; σ = 0.991 S/m; ε_r = 56.57; ρ = 1000 kg/m^3 ; Phantom section: Flat Section ; Measurement Standard: DASY5 (IEEE/IEC/ANSI C63.19-2007)

DASY Configuration:

- Probe: EX3DV4 - SN3673; ConvF(10.51, 10.51, 10.51); Calibrated: 3/20/2017;
- Sensor-Surface: 1.4mm (Mechanical Surface Detection), Sensor-Surface: 3mm (Mechanical Surface Detection)
- Electronics: DAE4 Sn874; Calibrated: 8/21/2017
- Phantom: ELI 4.0; Type: QD OVA 001 BB; Serial: 1057
- DASY52 52.10.0(1446); SEMCAD X 14.6.10(7417)

Configuration_Body_Q5X QT-300 Incognito Low Band 470-545MHz 250mW/Body Front, P=250mW, d=0mm/Area Scan (41x131x1): Interpolated grid: dx=1.500 mm, dy=1.500 mm
Maximum value of SAR (interpolated) = 1.55 W/kg

Configuration_Body_Q5X QT-300 Incognito Low Band 470-545MHz 250mW/Body Front, P=250mW, d=0mm/Zoom Scan (5x5x7) (7x7x7)/Cube 0: Measurement grid: dx=7.5mm, dy=7.5mm, dz=5mm
Reference Value = 22.11 V/m; Power Drift = 0.24 dB
Peak SAR (extrapolated) = 2.04 W/kg
SAR(1 g) = 1.04 W/kg; SAR(10 g) = 0.589 W/kg (SAR corrected for target medium)
Maximum value of SAR (measured) = 1.36 W/kg

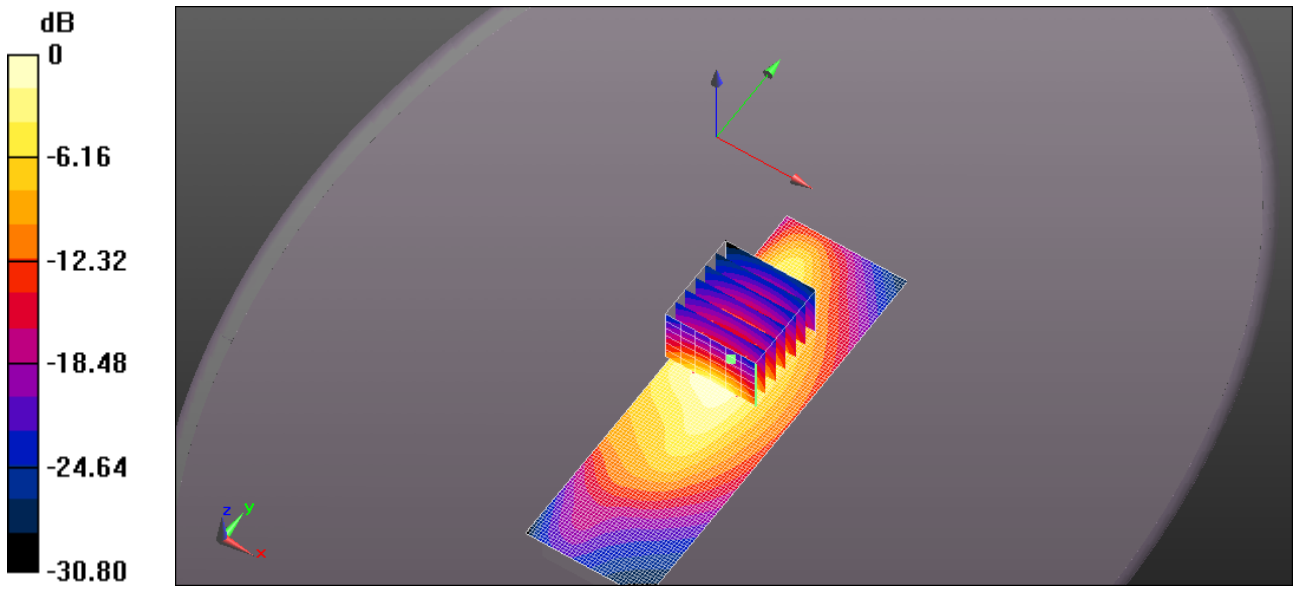

0 dB = 1.55 W/kg = 1.90 dBW/kg