OPTIWAVE 7400-24 C Handbook

Radar (FMCW) Level Transmitter for agitated liquids in high-precision applications

© KROHNE 12/2015 - 4003518001 - MA OPTIWAVE7400-24-R01-en

KROHNE

IMPRINT

All rights reserved. It is prohibited to reproduce this documentation, or any part thereof, without the prior written authorisation of KROHNE Messtechnik GmbH.

Subject to change without notice.

Copyright 2015 by
KROHNE Messtechnik GmbH - Ludwig-Krohne-Str. 5 - 47058 Duisburg (Germany)

1 Safety instructions 7

1.1 Software history 7
1.2 Intended use 7
1.3 Certification 8
1.4 Electromagnetic compatibility 8
1.5 Radio approvals 9
1.5.1 European Union (EU) 9
1.5.2 U.S.A. and Canada 12
1.6 Safety instructions from the manufacturer 15
1.6.1 Copyright and data protection 15
1.6.2 Disclaimer 15
1.6.3 Product liability and warranty 16
1.6.4 Information concerning the documentation 16
1.6.5 Warnings and symbols used 17
1.7 Safety instructions for the operator 17

2 Device description 18

2.1 Scope of delivery 18
2.2 Device description 19
2.3 Visual Check 20
2.4 Nameplates 21
2.4.1 Nameplate (examples) 21

3 Installation 23

3.1 General notes on installation 23
3.2 Storage 23
3.3 Transport 24
3.4 Pre-installation requirements 24
3.5 Pressure and temperature ranges 25
3.6 Recommended mounting position 26
3.6.1 General data 26
3.6.2 Tanks with conical bottoms 27
3.7 Mounting restrictions 28
3.7.1 General data 28
3.7.2 Obstacles in the tank 28
3.7.3 Devices with Metallic Horn antenna 29
3.7.4 Process connections 30
3.7.5 Standpipes (stilling wells and bypass chambers) 31
3.8 How to attach antenna extensions 35
3.9 How to turn or remove the signal converter 36
3.10 How to assemble the remote version 37
3.11 Weather protection 39
3.11.1 How to attach the weather protection to the device 39
3.11.2 How to open the weather protection 40

4 Electrical connections 41

4.1 Safety instructions ... 41
4.2 Electrical installation: 2-wire, loop-powered ... 41
4.2.1 Compact version ... 41
4.2.2 Remote version ... 42
4.3 Remote device data ... 43
4.3.1 Requirements for signal cables supplied by the customer ... 43
4.3.2 How to prepare a signal cable supplied by the customer ... 44
4.3.3 How to connect the signal cable to the device ... 45
4.4 Electrical connection for current output ... 48
4.4.1 Non-Ex devices ... 48
4.4.2 Devices for hazardous locations ... 48
4.5 Protection category ... 48
4.6 Networks ... 49
4.6.1 General information ... 49
4.6.2 Point-to-point connection ... 49
4.6.3 Multi-drop networks ... 50
4.6.4 Fieldbus networks ... 50

5 Start-up 52

5.1 How to start the device ... 52
5.1.1 Start-up checklist ... 52
5.1.2 How to start the device ... 52
5.2 Operating concept ... 52
5.3 Digital display screen ... 53
5.3.1 Local display screen layout ... 53
5.3.2 Functions of keypad buttons ... 54
5.4 Remote communication with PACTware™ ... 54
5.5 Remote communication with the AMS™ Device Manager ... 55

6 Operation 56

6.1 User modes ... 56
6.2 Normal mode ... 57
6.3 Configuration mode ... 58
6.3.1 General notes ... 58
6.3.2 How to get access to the commissioning menu ... 58
6.3.3 Keypad functions ... 59
6.3.4 Menu overview ... 62
6.3.5 Function description ... 63
6.4 Further information on device configuration ... 70
6.4.1 Quick Setup (Commissioning) ... 70
6.4.2 Test ... 72
6.4.3 Protection of the device settings ... 73
6.4.4 HART® network configuration ... 73
6.4.5 Distance measurement ... 74
6.4.6 Level measurement ... 75
6.4.7 How to configure the device to measure volume or mass ... 76
6.4.8 How to make a filter to remove radar signal interference ... 77
6.4.9 How to measure correctly in tanks with curved or conical bottoms ... 78
6.5 Status and error messages ... 79
6.5.1 Device status (markers) ... 79

6.5.2 Error handling ... 80

7 Service 84

7.1 Periodic maintenance ... 84
7.2 How to clean the top surface of the device ... 84
7.3 How to clean horn antennas under process conditions ... 84
7.4 How to replace device components ... 84
7.4.1 Service warranty ... 84
7.4.2 Replacement of the OPTIWAVE 7300 signal converter with the OPTIWAVE 7400 signal converter ... 85
7.5 Spare parts availability ... 87
7.6 Availability of services ... 87
7.7 Returning the device to the manufacturer ... 88
7.7.1 General information ... 88
7.7.2 Form (for copying) to accompany a returned device ... 89
7.8 Disposal ... 89

8 Technical data 90

8.1 Measuring principle ... 90
8.2 Technical data ... 91
8.3 Minimum power supply voltage ... 99
8.4 Antenna selection ... 100
8.5 Guidelines for maximum operating pressure ... 101
8.6 Dimensions and weights ... 103

9 Description of HART interface 115

9.1 General description ... 115
9.2 Software history ... 115
9.3 Connection variants ... 116
9.3.1 Point-to-Point connection - analogue / digital mode ... 116
9.3.2 Multi-Drop connection (2-wire connection) ... 116
9.4 HART® device variables ... 116
9.5 Field Communicator 475 (FC 475) ... 116
9.5.1 Installation ... 116
9.5.2 Operation ... 117
9.6 Asset Management Solutions (AMS) ... 117
9.6.1 Installation ... 117
9.6.2 Operation ... 117
9.6.3 Parameter for the basic configuration ... 117
9.7 Field Device Tool / Device Type Manager (FDT / DTM) ... 118
9.7.1 Installation ... 118
9.7.2 Operation ... 118
9.8 HART® menu tree for Basic-DD ... 118
9.8.1 Overview Basic-DD menu tree (positions in menu tree) ... 118
9.8.2 Basic-DD menu tree (details for settings) ... 118
9.9 HART® menu tree for AMS ... 119
9.9.1 Overview AMS menu tree (positions in menu tree) ... 120

9.9.2 AMS menu tree (details for settings) ... 120

10 Appendix 122

10.1 Order code ... 122
10.2 Spare parts ... 130
10.3 Accessories ... 134
10.4 Glossary ... 135

11 Notes 138

1.1 Software history

"Firmware revision" agrees with NAMUR NE 53. It is a series of numbers used to record the revision status of embedded software (firmware) in electronic equipment assemblies. It gives data on the type of changes made and the effect that changes have on compatibility.

Data about software revisions is shown in menu 1.1.0 IDENT. For more data, refer to *Function description* on page 63. If it is not possible to refer to the device menu, record the serial number of the device (given on the device nameplate) and speak to the supplier.

Release date	Printed circuit assembly	Firmware revision	Hardware revision	Changes and compatibility	Documentation
YYYY-MM-DD	Converter	1.00.0x	400xxxxx01	-	HB OPTIWAVE 7400-24 R01
	Sensor	1.00.0x	400xxxxx01		
	HMI (LCD display option)	1.00.0x	400xxxxx01		

1.2 Intended use

CAUTION!
Responsibility for the use of the measuring devices with regard to suitability, intended use and corrosion resistance of the used materials against the measured fluid lies solely with the operator.

INFORMATION!
The manufacturer is not liable for any damage resulting from improper use or use for other than the intended purpose.

This radar level transmitter measures distance, level, mass, volume and reflectivity of liquids, pastes and slurries.

It can be installed on tanks, reactors and open channels.

1.3 Certification

DANGER!
For devices used in hazardous areas, additional safety notes apply; please refer to the Ex documentation.

INFORMATION!
For SIL-approved devices; please refer to the safety manual.

In accordance with statutory requirements of the EC directives, the device described in this document meets the following safety requirements:

- Electromagnetic Compatibility Directive
- The safety part of the Low-Voltage Directive

For more data, refer to the CE Declaration of Conformity for this device.

All devices meet the requirements of NAMUR Guidelines NE 21, NE 43, NE 53 and NE 107.

1.4 Electromagnetic compatibility

The device agrees with Electromagnetic Compatibility Directive.

You can install the device on tanks, open vessels or channels, but the type of antenna must agree with the location of the device. For more data, refer to *Radio approvals* on page 9. This agrees with Immunity and Emissions requirements for industrial environments.

1.5 Radio approvals

1.5.1 European Union (EU)

INFORMATION!
LPR (Level Probing Radar) *equipment are devices for the measurement of level in the open air or in a closed space (a metallic tank etc.).* ***TLPR (Tank Llevel Probing Radar)*** *equipment are devices for the measurement of level in a closed space only. You can use LPR devices for TLPR applications. The LPR and TLPR devices meet the requirements of the R&TTE (Radio Equipment and Telecommunications Terminal Equipment) Directive for use in the member countries of the EU.*

For more data about the order code, refer to Order code on page 122.

This level transmitter is approved to be used outside metallic tanks. If you use the device outdoors, read the device nameplate to make sure that the device can be used for your application. Only the antennas that follow are permitted for open-air applications:

- VF744xxxx5xxx...
- VF744xxxx6xxx...
- VF744xxxx7xxx...

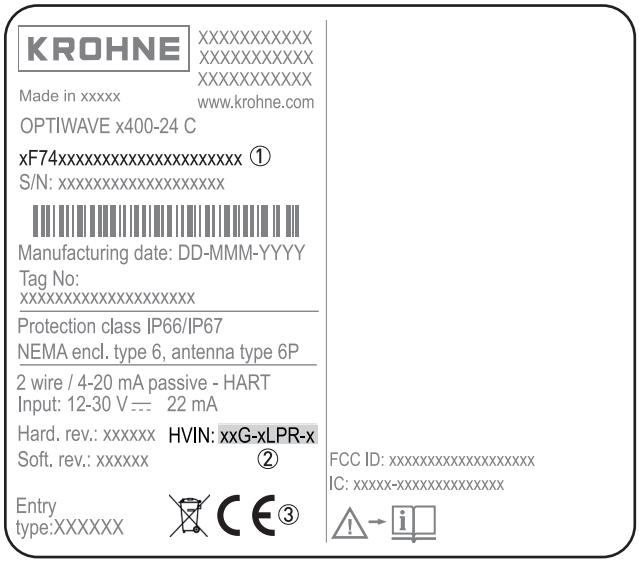

Figure 1-1: Radio approval information on the nameplate

① Type code (defined in order)
② HVIN (Hardware Version Identification Number). This number gives the radar signal frequency (24G = 24 GHz), the location of the device (TLPR or LPR) and the type of signal converter (compact (C))
TLPR device: HVIN: 244G-TLPR-C
LPR device: HVIN: 24G-LPR-C
③ CE sign

TLPR (Tank Level Probing Radar) devices only

Use approved personnel to install the device. The device and the tank agree with the R&TTE directive if you obey the instructions that follow:

- TLPR (Tank Level Probing Radar) are required to be installed at a permanent fixed position at a closed (not open) metallic tank or reinforced concrete tank, or similar enclosure structure made of comparable attenuating material;
- flanges and attachments of the TLPR equipment shall provide the necessary microwave sealing by design;
- sight glasses shall be coated with a microwave-proof coating when necessary (i.e. electrically conductive coating);
- manholes or connection flanges at the tank shall be closed to ensure a low-level leakage of the signal into the air outside the tank;
- whenever possible, mounting of the TLPR equipment shall be on top of the tank structure with the orientation of the antenna to point in a downward direction;
- installation and maintenance of the TLPR equipment shall be performed by professionally trained individuals only.

For data about how to install EMI/RFI shielding gaskets, refer to the instructions supplied with this accessory.

LPR (Level Probing Radar) devices only

Use approved personnel to install the device. If the device is operated in the open air (outdoors), it agrees with the R&TTE directive if you obey these instructions:

- The antenna must always point downwards. The boresight direction of the antenna must be vertical. No other angles are permitted.
- Install the device more than 4 km / 2.485 mi away from radio astronomy sites.
- If the device is 4...40 km / 2.485...24.855 mi away from radio astronomy sites, do not install the device more than 15 m / 49.21 ft above the ground.

CAUTION!
If it is necessary to install the device less than 4 km / 2.485 mi from radio astronomy sites, you must get the approval of the national regulatory authority before installation (e.g. ANFR (France), Bundesnetzagentur (Germany), Ofcom (United Kingdom) etc.).

Radio quiet zones: locations of radio astronomy sites (stations) in Europe and northern Eurasia

Country	Name of the station	Location	
		Latitude, φ	Longitude, λ
Finland	Metsähovi	60°13'04" N	24°23'37" E
	Tuorla	60°24'56" N	22°26'31" E
France	Plateau de Bure	44°38'01" N	05°54'26" E
	Floirac	44°50'10" N	00°31'37" W
Germany	Effelsberg	50°31'32" N	06°53'00" E
Hungary	Penc	47°47'22" N	19°16'53" E

Country	Name of the station	Location	
		Latitude, φ	Longitude, λ
Italy	Medicina	44°31'14" N	11°38'49" E
	Noto	36°52'34" N	14°59'21" E
	Sardinia	39°29'50" N	09°14'40" E
Latvia	Ventspils	57°33'12" N	21°51'17" E
Poland	Kraków – Fort Skala	50°03'18" N	19°49'36" E
	Torun – Piwnice	52°54'48" N	18°33'30" E
Russia	Dmitrov	56°26'00" N	37°27'00" E
	Kalyazin	57°13'22" N	37°54'01" E
	Pushchino	54°49'00" N	37°40'00" E
	Zelenchukskaya	43°49'53" N	41°35'32" E
Spain	Yebes	40°31'27" N	03°05'22" W
	Robledo	40°25'38" N	04°14'57" W
Switzerland	Bleien	47°20'26" N	08°06'44" E
Sweden	Onsala	57°23'45" N	11°55'35" E
UK	Cambridge	52°09'59" N	00°02'20" E
	Darnhall	53°09'22" N	02°32'03" W
	Jodrell Bank	53°14'10" N	02°18'26" W
	Knockin	52°47'24" N	02°59'45" W
	Pickmere	53°17'18" N	02°26'38" W

1.5.2 U.S.A. and Canada

INFORMATION!
LPR (Level Probing Radar) *equipment are devices for the measurement of level in the open air or in a closed space (a metallic tank etc.).* ***TLPR (Tank Llevel Probing Radar)*** *equipment are devices for the measurement of level in a closed space only.*

For more data about the order code, refer to Order code on page 122.

This level transmitter is approved to be used outside metallic tanks. If you use the device in the open air, read the device nameplate to make sure that the device can be used for your application:

LEGAL NOTICE!
FCC
This device complies with Part 15 of the FCC Rules. Operation is subject to the following two conditions:

1. *This device may not cause harmful interference, and*
2. *This device must accept any interference received, including interference which may cause undesired operation.*

Changes or modifications made to this equipment not expressly approved by the manufacturer may void the FCC authorizations to operate this equipment.

This equipment has been tested and found to comply with the limits for a Class B digital device, pursuant to Part 15 of the FCC Rules. These limits are designed to provide reasonable protection against harmful interference in a residential installation. This equipment generates, uses and can radiate radio frequency energy and, if not installed and used in accordance with the instructions, may cause harmful interference to radio communications. However, there is no guarantee that interference will not occur in a particular installation. If this equipment does cause harmful interference to radio or television reception, which can be determined by turning the equipment off and on, the user is encouraged to try to correct the interference by one or more of the following measures:

- *Reorient or relocate the receiving antenna.*
- *Increase the separation between the equipment and receiver.*
- *Connect the equipment into an outlet on a circuit different from that to which the receiver is connected.*
- *Consult the dealer or an experienced radio/TV technician for help.*

§

LEGAL NOTICE!
IC
This device complies with Industry Canada licence-exempt RSS standard(s).
Operation is subject to the following conditions:
1. this device may not cause harmful interference, and
2. this device must accept any interference received, including interference that may cause undesired operation.

This device and the handbook complies with the requirements of RSS-Gen. Operation is subject to the conditions that follow:
1. The installation of the LPR/TLPR device shall be done by trained installers, in strict compliance with the manufacturer's instructions.
2. The use of this device is on a "no-interference, no-protection" basis. That is, the user shall accept operations of high-powered radar in the same frequency band which may interfere with or damage this device. However, devices found to interfere with primary licensing operations will be required to be removed at the user's expense.
3. The TLPR device shall be installed and operated in a completely enclosed container to prevent RF emissions, which can otherwise interfere with aeronautical navigation.
4. LPR devices: Ensure a vertically downward orientation of the transmit antenna and a installation only at fixed locations.
5. The installer / user of this device shall ensure that it is at least 10 km from the Dominion Radio Astrophysical Observatory (DRAO) near Penticton, British Columbia. The coordinates of the DRAO are latitude 49° 19'15" N and longitude 119° 37'12" W. For devices not meeting this 10 km separation (e.g. those in the Okanagan Valley, British Columbia) the installer / user must coordinate with, and obtain the written concurrence of, the Director of the DRAO before the equipment can be installed or operated. The Director of the DRAO may be contacted at 250-497-2300 (tel.) or 250-497-2355 (fax). Alternatively, the Manager, Regulatory Standards, Industry Canada, may be contacted.

The Product Marketing Name (PMN) of this device is "Optiwave x400-24 series".

This level transmitter is approved to be used outside metallic tanks. If you use the device in the open air, read the device nameplate to make sure that the device can be used for your application. Only the antennas that follow are permitted for open-air applications:

- VF744xxxx4xxx...
- VF744xxxx5xxx...
- VF744xxxx6xxx...
- VF744xxxx7xxx...
- VF744xxxxAxxx...
- VF744xxxxBxxx...
- VF744xxxxCxxx...
- VF744xxxxDxxx...
- VF744xxxxExxx...
- VF744xxxxGxxx...
- VF744xxxxHxxx...
- VF744xxxxKxxx...
- VF744xxxxPxxx...
- VF744xxxxRxxx...
- VF744xxxxSxxx...

- VF744xxxxTxxx...
- VF744xxxxUxxx...

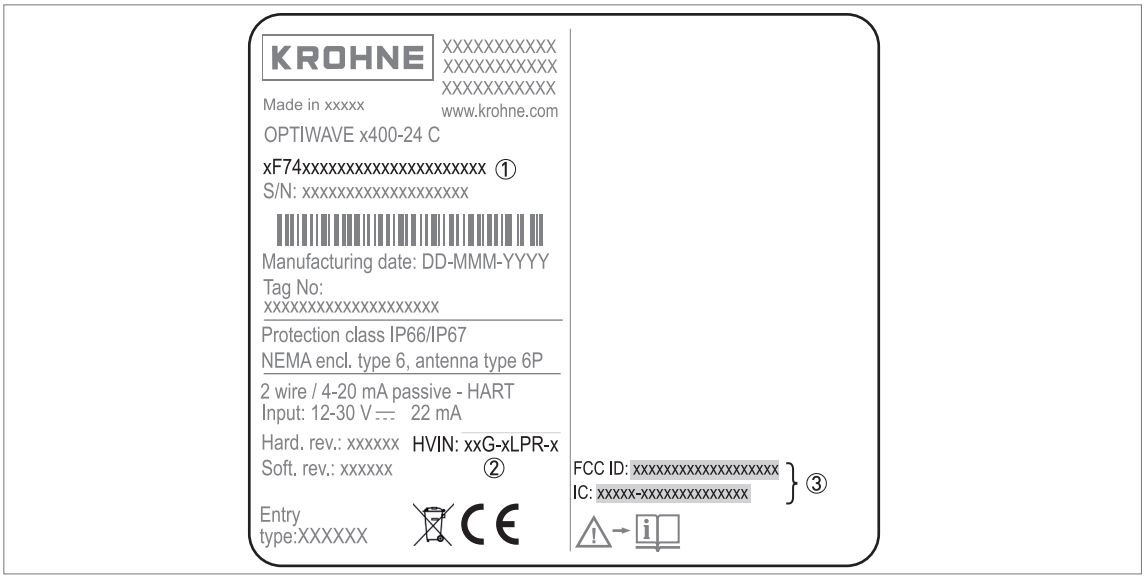

Figure 1-2: FCC ID and IC number

① Type code (defined in order)

② HVIN (Hardware Version Identification Number). This number gives the radar signal frequency (24G = 24 GHz), the location of the device (TLPR or LPR) and the type of signal converter (compact (C))
TLPR device: HVIN: 24G-TLPR-C
LPR device: HVIN: 24G-LPR-C

③ FCC ID and IC number
TLPR device: FCC-ID:Q6BFMCW24G74T, IC number: 1991D-FMCW24G74T
LPR device: FCC-ID: Q6BFMCW24G74L, IC number:1991D-FMCW24G74L

1.6 Safety instructions from the manufacturer

1.6.1 Copyright and data protection

The contents of this document have been created with great care. Nevertheless, we provide no guarantee that the contents are correct, complete or up-to-date.

The contents and works in this document are subject to copyright. Contributions from third parties are identified as such. Reproduction, processing, dissemination and any type of use beyond what is permitted under copyright requires written authorisation from the respective author and/or the manufacturer.

The manufacturer tries always to observe the copyrights of others, and to draw on works created in-house or works in the public domain.

The collection of personal data (such as names, street addresses or e-mail addresses) in the manufacturer's documents is always on a voluntary basis whenever possible. Whenever feasible, it is always possible to make use of the offerings and services without providing any personal data.

We draw your attention to the fact that data transmission over the Internet (e.g. when communicating by e-mail) may involve gaps in security. It is not possible to protect such data completely against access by third parties.

We hereby expressly prohibit the use of the contact data published as part of our duty to publish an imprint for the purpose of sending us any advertising or informational materials that we have not expressly requested.

1.6.2 Disclaimer

The manufacturer will not be liable for any damage of any kind by using its product, including, but not limited to direct, indirect or incidental and consequential damages.

This disclaimer does not apply in case the manufacturer has acted on purpose or with gross negligence. In the event any applicable law does not allow such limitations on implied warranties or the exclusion of limitation of certain damages, you may, if such law applies to you, not be subject to some or all of the above disclaimer, exclusions or limitations.

Any product purchased from the manufacturer is warranted in accordance with the relevant product documentation and our Terms and Conditions of Sale.

The manufacturer reserves the right to alter the content of its documents, including this disclaimer in any way, at any time, for any reason, without prior notification, and will not be liable in any way for possible consequences of such changes.

1.6.3 Product liability and warranty

The operator shall bear responsibility for the suitability of the device for the specific purpose. The manufacturer accepts no liability for the consequences of misuse by the operator. Improper installation or operation of the devices (systems) will cause the warranty to be void. The respective "Standard Terms and Conditions" which form the basis for the sales contract shall also apply.

1.6.4 Information concerning the documentation

To prevent any injury to the user or damage to the device it is essential that you read the information in this document and observe applicable national standards, safety requirements and accident prevention regulations.

If this document is not in your native language and if you have any problems understanding the text, we advise you to contact your local office for assistance. The manufacturer can not accept responsibility for any damage or injury caused by misunderstanding of the information in this document.

This document is provided to help you establish operating conditions, which will permit safe and efficient use of this device. Special considerations and precautions are also described in the document, which appear in the form of icons as shown below.

1.6.5 Warnings and symbols used

Safety warnings are indicated by the following symbols.

DANGER!
This warning refers to the immediate danger when working with electricity.

DANGER!
This warning refers to the immediate danger of burns caused by heat or hot surfaces.

DANGER!
This warning refers to the immediate danger when using this device in a hazardous atmosphere.

DANGER!
These warnings must be observed without fail. Even partial disregard of this warning can lead to serious health problems and even death. There is also the risk of seriously damaging the device or parts of the operator's plant.

WARNING!
Disregarding this safety warning, even if only in part, poses the risk of serious health problems. There is also the risk of damaging the device or parts of the operator's plant.

CAUTION!
Disregarding these instructions can result in damage to the device or to parts of the operator's plant.

INFORMATION!
These instructions contain important information for the handling of the device.

LEGAL NOTICE!
This note contains information on statutory directives and standards.

- HANDLING
  This symbol designates all instructions for actions to be carried out by the operator in the specified sequence.

➲ RESULT
This symbol refers to all important consequences of the previous actions.

1.7 Safety instructions for the operator

WARNING!
In general, devices from the manufacturer may only be installed, commissioned, operated and maintained by properly trained and authorized personnel.
This document is provided to help you establish operating conditions, which will permit safe and efficient use of this device.

2.1 Scope of delivery

INFORMATION!
Do a check of the packing list to make sure that you have all the elements given in the order.

Scope of delivery – horn antenna

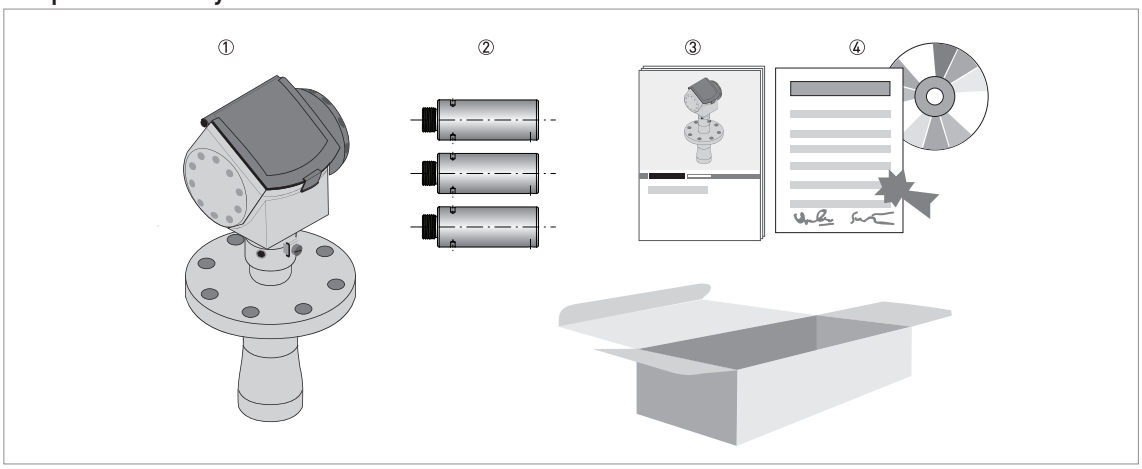

Figure 2-1: Scope of delivery – horn antenna

① Signal converter and antenna in compact version
② Antenna extensions (option)
③ Quick Start
④ DVD-ROM (including Handbook, Quick Start, Technical Datasheet and related software)

Scope of delivery – Drop antenna

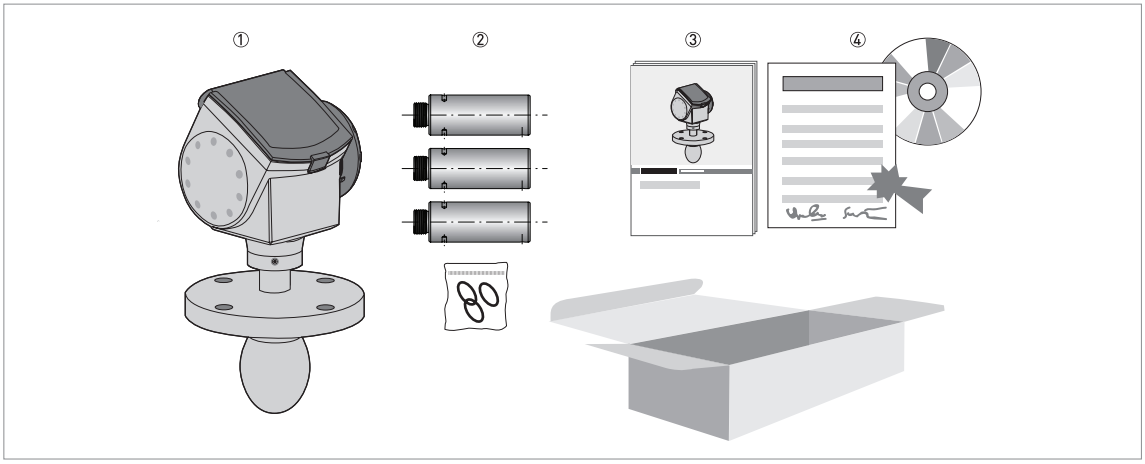

Figure 2-2: Scope of delivery – Drop antenna

① Signal converter and antenna in compact version
② Antenna extensions (option) and O-ring for each antenna extension
③ Quick Start
④ DVD-ROM (including Handbook, Quick Start, Technical Datasheet, and related software)

INFORMATION!
No special tools or training required!

2.2 Device description

This device is a 24 GHz FMCW-radar level transmitter. It is a non-contact technology and is 2-wire loop-powered. It is designed to measure the distance, level, mass, volume and reflectivity of liquids, pastes and slurries.

Radar level transmitters use an antenna to emit a signal to the surface of the measured product. The device has many antennas available. Thus, it can measure most products even in difficult conditions. Also refer to *Technical data* on page 90.

If it is ordered with the applicable options, it can be certified for use in hazardous areas.

These output options are available:

- 1 output: 4...20 mA (HART)
- 2-wire FOUNDATION™ Fieldbus output
- 2-wire PROFIBUS PA output

These accessories are available:

- Stainless steel weather protection.
- RS232 / HART® converter (VIATOR).
- USB / HART® converter.

INFORMATION!
For more data on accessories, refer to Accessories on page 134.

2.3 Visual Check

WARNING!
If the display screen glass is broken, do not touch.

INFORMATION!
Inspect the packaging carefully for damages or signs of rough handling. Report damage to the carrier and to the local office of the manufacturer.

Placeholder

Figure 2-3: Visual check

① Device nameplate (for more data refer to *Nameplate (examples)* on page 21)
② Process connection data (size and pressure rating, material reference and heat number)
③ Gasket material data – refer to the illustration that follows

If the device is supplied with an FKM/FPM gasket, there is no symbol on the side of the process connection.

INFORMATION!
Look at the device nameplate to ensure that the device is delivered according to your order. Check for the correct supply voltage printed on the nameplate.

INFORMATION!
Compare the material references on the side of the process connection with the order.

2.4 Nameplates

INFORMATION!
Look at the device nameplate to ensure that the device is delivered according to your order. Check for the correct supply voltage printed on the nameplate.

2.4.1 Nameplate (examples)

Figure 2-4: Compact (C) and remote (F) versions: Non-Ex nameplate attached to the housing

① Cable entry size
② Input / output option
③ Degree of ingress protection (according to EN 60529 / IEC 60529)
④ Customer tag number
⑤ Date of manufacture
⑥ Order number
⑦ Type code (defined in order)
⑧ Model name and number. The last letter "X" is either:
C = compact version or
F = remote (field) version
⑨ Company name and address

Place holder

Figure 2-5: Remote (F) version: Non-Ex nameplate attached to the antenna assembly

① Cable entry size
② Degree of ingress protection (according to EN 60529 / IEC 60529)
③ Date of manufacture
④ Order number
⑤ Type code (defined in order)
⑥ Model name and number
⑦ Company name and address

3.1 General notes on installation

INFORMATION!
Inspect the packaging carefully for damages or signs of rough handling. Report damage to the carrier and to the local office of the manufacturer.

INFORMATION!
Do a check of the packing list to make sure that you have all the elements given in the order.

INFORMATION!
Look at the device nameplate to ensure that the device is delivered according to your order. Check for the correct supply voltage printed on the nameplate.

3.2 Storage

WARNING!
Do not keep the device in a vertical position. This will damage the antenna and the device will not measure correctly.

Place holder

Figure 3-1: Storage conditions

① When you put the device into storage, do not keep it in a vertical position
② Put the device on its side. We recommend that you use the packaging in which it was delivered.
③ Storage temperature range: -40...+85°C / -40...+185°F

- Store the device in a dry and dust-free location.
- Keep the converter out of the sunlight.
- Store the device in its original packing.

3.3 Transport

Place holder

Figure 3-2: How to lift the device

① Remove the converter before you lift the device with a hoist.

WARNING!
Lift the device carefully to prevent damage to the antenna.

3.4 Pre-installation requirements

INFORMATION!
Obey the precautions that follow to make sure that the device is correctly installed.

- Make sure that there is sufficient space on all sides.
- Protect the signal converter from direct sunlight.
- Do not subject the signal converter to heavy vibrations.

3.5 Pressure and temperature ranges

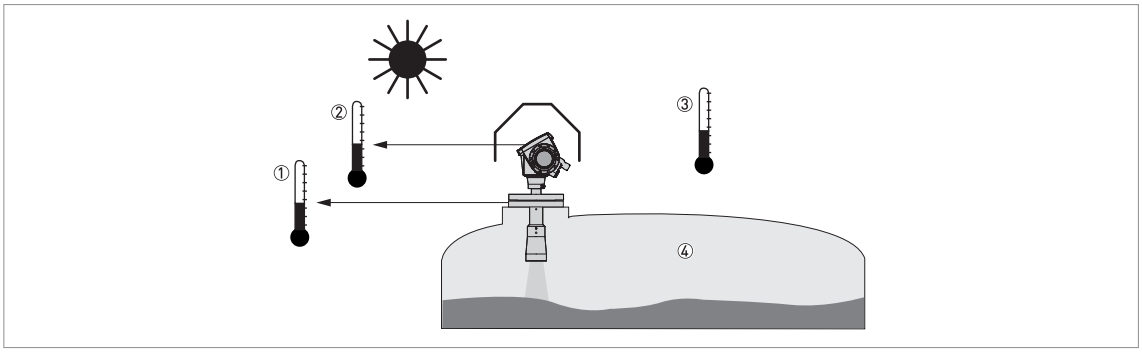

Figure 3-3: Pressure and temperature ranges

① Flange temperature
FKM/FPM gasket: -40...+200°C / -40...+390°F; Kalrez® 6375 gasket: -20...+200°C / -4...+390°F;
EPDM gasket: -50...+150°C / -58...+300°F
Ex devices: see supplementary operating instructions

② Ambient temperature for operation of the display
-20...+60°C / -4...+140°F
If the ambient temperature is not between these limits, the display screen switches off automatically

③ Ambient temperature
Non-Ex devices: -40...+80°C / -40...+175°F
Ex devices: see supplementary operating instructions

WARNING!
The process connection temperature range must agree with the temperature limits of the gasket material. The operating pressure range is subject to the process connection used and the flange temperature.

Antenna type	Maximum process connection temperature		Maximum operating pressure	
	[°C]	[°F]	barg	psig
PP Drop	+100	+210	16	232
PTFE Drop	+150	+300	40	580
PEEK Drop	+xxx	+xxx	xx	xxx
Hygienic	+150	+300	10	145
Horn / Sheet metal horn	+200 ①	+300 ①	40 (100) ②	580 (1450) ②

① The maximum process connection temperature must agree with the temperature limits of the gasket material. If the distance piece option is not attached, the maximum process connection temperature is +150°C / +300°F.

② Standard operating pressure: 40 barg / 580 psig. Optional max. operating pressure: 100 barg / 1450 psig.

3.6 Recommended mounting position

CAUTION!
Follow these recommendations to make sure that the device measures correctly. They have an effect on the performance of the device.

We recommend that you prepare the installation when the tank is empty.

3.6.1 General data

INFORMATION!
If possible, do not install a nozzle on the tank centerline.

Place holder

Figure 3-4: Recommended nozzle position for liquids, pastes and slurries

① Nozzles for DN40 or DN50 Horn antennas, or DN50 Hygienic antenna
② Nozzles for DN80, DN100, DN150 or DN200 Horn antennas and DN80 or DN150 Drop antennas
③ Tank height
④ Tank diameter
⑤ Minimum distance of nozzle from the tank wall : 1/7 × tank height
Maximum distance of nozzle from the tank wall : 1/3 × tank diameter
⑥ Minimum distance of nozzle from the tank wall : 1/10 × tank height
Maximum distance of nozzle from the tank wall : 1/3 × tank diameter

Place holder

Figure 3-5: More than 1 FMCW radar level meter can be operated in a tank

3.6.2 Tanks with conical bottoms

Place holder

Figure 3-6: Tanks with conical bottoms

Conical bottoms have an effect on the measuring range. The device cannot measure to the bottom of the tank.

① Axis of radar beam
② Minimum level reading

3.7 Mounting restrictions

CAUTION!
Follow these recommendations to make sure that the device measures correctly. They have an effect on the performance of the device.

We recommend that you prepare the installation when the tank is empty.

3.7.1 General data

Place holder

Figure 3-7: General Installation recommendations

① Do not tilt the device more than 2°
② We recommend that you do an empty spectrum recording if there are too many obstacles in the radar beam (for more data, refer to *How to make a filter to remove radar signal interference* on page 77). If necessary, install a bypass chamber or stilling well or use an "L" antenna extension (the device must be installed on the side of the tank) to move the device away from obstacles.
③ 2.5 mm / 0.1¨ max. for high-dielectric constant liquids
④ Curved and conical tank bottoms. For fine adjustment of the device, refer to *How to measure correctly in tanks with curved or conical bottoms* on page 78.
⑤ Beam radius (DN40 horn antenna): increments of 180 mm/m or 2.15¨/ft (10°)
Beam radius (DN50 horn antenna or DN50 Hygienic antenna): increments of 130 mm/m or 1.55¨/ft (7.5°)
Beam radius (DN80 horn antenna): increments of 90 mm/m or 1.1¨/ft (5°)
Beam radius (DN100 horn antenna or DN80 Drop antenna): increments of 70 mm/m or 0.83¨/ft (4°)
Beam radius (DN150 horn antenna): increments of 52.5 mm/m or 0.63¨/ft (3°)
Beam radius (DN150 Drop antenna or DN200 horn antenna): increments of 35 mm/m or 0.42¨/ft (2°)

3.7.2 Obstacles in the tank

Obstacles in the tank can cause parasitic signals. They have an effect on the performance of the device.

CAUTION!
If there are parasitic signals, the device will not measure correctly. Parasitic signals are caused by:
- *Objects in the tank.*
- *Sharp corners that are perpendicular to the path of the radar beam.*

Do an Empty Spectrum recording (refer to **Operation**) to remove parasitic signals with a filter.

Place holder

Figure 3-8: Obstacles in the tank

Do not put the device directly above obstacles (agitator, support beams, heating tubes etc.). Parasitic signals from obstacles will cause the device to measure incorrectly.

① Solution 1: Put the device on another process connection away from obstacles
② Solution 2: Attach the device to the side of the tank and use an "L" (right angle) extension

CAUTION!
Do not put the device near to the product inlet. If the product that enters the tank touches the antenna, the device will measure incorrectly. If the product fills the tank directly below the antenna, the device will also measure incorrectly.

Place holder

Figure 3-9: Product inlets

① The device is in the correct position.
② The device is too near to the product inlet.

3.7.3 Devices with Metallic Horn antenna

The antenna must project out of the nozzle. If necessary, use an antenna extension. But if the tank roof is flat and the tank fitting is symmetrical, it is not necessary for the antenna to project out of the nozzle. Thus, the device can have a larger measuring range.

3.7.4 Process connections

Requirements for flange connections

Place holder

Figure 3-10: Flange connection

Equipment needed:

- Device
- Flange gasket (not supplied)
- Wrench (not supplied)

- Make sure the flange on the nozzle is level.
- Make sure that you use the applicable gasket for the flange dimensions and the process.
- Align the gasket correctly on the flange facing of the nozzle.
- Lower the antenna carefully into the tank.
- Make sure that you point the device in the correct direction. Refer to "Point the device in the correct direction" in this section.
- Tighten the flange bolts.

➲ Refer to local rules and regulations for the correct torque to apply to the bolts.

Requirements for threaded connections

Place holder

Figure 3-11: Threaded connection

Equipment needed:

- Device
- Gasket for G 1½ connection (not supplied)
- Thread seal tape (PTFE) for 1½ NPT connection (not supplied)
- 50 mm / 2" wrench (not supplied)

WARNING!
Do not tighten the connection to a torque more than 40 Nm. If the connection is too tight, this will damage the thread.
To prevent damage to the antenna, make sure that the minimum diameter of the hole for a 1½ NPT thread connection is not less than 43.4 mm / 1.71".

- Make sure the tank connection is level.
- **ISO 228-1 (G) connection:** Make sure that you use the applicable gasket for the connection dimensions and the process.
- **ISO 228-1 (G) connection:** Align the gasket correctly.
- **NPT connection:** Wind the thread seal tape around the process connection in agreement with good engineering practice.
- Lower the antenna carefully into the tank.
- Turn the threaded connection on the antenna to attach the device to the process connection.
- Make sure that you point the device in the correct direction. Refer to "Point the device in the correct direction" in this section.
- Tighten the connection to the correct torque (not more than 40 Nm).

3.7.5 Standpipes (stilling wells and bypass chambers)

Use a standpipe if:

- There is highly conductive foam in the tank.
- The liquid is very turbulent or agitated.
- There are too many other objects in the tank.
- The device is measuring a liquid (petro-chemicals) in a tank with a floating roof.
- The device is installed in a horizontal cylindrical tank (refer to the end of this section)

Place holder

Figure 3-12: Installation recommendations for standpipes (stilling wells and bypass chambers)

① A stilling well solution
② A bypass chamber solution
③ Air circulation hole
④ Level of the liquid

CAUTION!

- *The standpipe must be electrically conductive.*
- *The inside diameter of the standpipe must not be more than 5 mm / 0.2¨ over the diameter of the antenna (for a high-dielectric constant liquid).*
- *The standpipe must be straight. There must be no sudden changes in internal diameter greater than 1 mm / 0.04¨.*
- *The standpipe must be vertical.*
- *Recommended surface roughness: <±0.1 mm / 0.004¨.*
- *Make sure that there are no deposits at the bottom of the standpipe.*
- *Make sure that there is liquid in the standpipe.*

Stilling wells - general notes

Installation in tanks containing one liquid and foam

- Drill an air circulation hole (max. Ø10 mm / 0.4¨) in the stilling well above the maximum level.
- Remove the burr from the hole.

Installation in tanks containing one liquid or more without foam

- Drill an air circulation hole (max. Ø10 mm / 0.4¨) in the stilling well above the maximum level.
- Drill 1 or more liquid circulation holes in the stilling well (if there is more than 1 liquid in the tank).

➲ These holes help the liquid to move freely between the stilling well and the tank.

- Remove the burr from the hole.

Stilling wells: floating roofs

If the device must be installed on a tank with a floating roof, install it in a stilling well.

Place holder

Figure 3-13: Floating roofs

① Sediment
② Support fixtures
③ Stilling well
④ Floating roof
⑤ Product
⑥ Tank

Stilling wells: horizontal cylindrical tanks

We recommend that you install the device in a stilling well if the device:

- is for a horizontal cylindrical tank,
- is in a metallic tank,
- measures a product with a high dielectric constant and
- is on the centerline of the tank.

Place holder

Figure 3-14: Horizontal cylindrical tanks

① The device is installed without a stilling well. There are multiple reflections. Refer to the CAUTION! that follows.
② The device is installed in a stilling well and measures correctly.

CAUTION!
*If the device is installed in horizontal cylindrical tank that contains a high dielectric constant liquid without a stilling well, do not put it on the tank centerline. This will cause multiple reflections and the device will not measure accurately. Use the **2.5.8 Multiple Reflections** function in **Supervisor > Application** to keep the effects of multiple reflections to a minimum. For more data,<Function Description> (2. Supervisor).*

Bypass chambers

Installation next to tanks containing one liquid and foam

- The top process connection of the bypass chamber must be above the maximum level of liquid.
- The bottom process connection of the bypass chamber must be below the lowest measured level of liquid.

Installation next to tanks containing more than one liquid

- The top process connection of the bypass chamber must be above the maximum level of liquid.
- The bottom process connection of the bypass chamber must be below the lowest measured level of liquid.
- Additional process connections are necessary for the liquids to circulate freely along the length of the bypass chamber.

Place holder

Figure 3-15: Installation recommendations for bypass chambers that contain more than one liquid

① Bypass chamber
② Additional process connection

3.8 How to attach antenna extensions

Horn antenna - antenna extensions

Place holder

Figure 3-16: Horn antenna - how to attach antenna extensions

Equipment needed:

- 3 mm Allen wrench (not supplied)

INFORMATION!
Drop antenna: *Antenna extensions can only be attached below flanges without the PP/PTFE flange plate option*

CAUTION!
Drop antenna: *Make sure that there are not more than 5 antenna extensions attached to a device with a Drop antenna. If there are more than 5 antenna extensions, the device will not measure correctly.*
Make sure that you put an O-ring ④ into the groove at the top of each antenna extension.

Equipment needed (not supplied):

- Torque wrench 200 Nm (for the H30 head of the Drop antenna sub-assembly)
- 3 mm Allen wrench

3.9 How to turn or remove the signal converter

INFORMATION!
The converter turns 360°. The converter can be removed from the process connection assembly under process conditions.

Place holder

Figure 3-17: How to turn or remove the signal converter

① Tool: 5 mm Allen wrench (not supplied)
② Cover for the wave guide hole on top of the process connection assembly (not supplied)

CAUTION!
If you remove the converter, put a cover on the wave guide hole on top of the process connection assembly.
When the converter is attached to the process connection assembly, tighten the lock screw.

3.10 How to assemble the remote version

- Attach the wall bracket ① to the flexible conduit.
- Tighten the locking nut ② with a 24 mm wrench.
- Attach the wall bracket to a wall or pipe (DN50...100 / 2"...4") ③.
- Loosen the housing locking screw ④ with a 5 mm Allen wrench.
- Remove the housing ⑤.

- Attach the housing to the flexible conduit ⑥.
- Tighten the housing locking screw ⑦.
- Attach the flexible conduit to the probe ⑧.
- Tighten the flexible conduit locking screw ⑨.

You can attach the wall bracket of the remote housing to a wall or pipe (DN50...100 / 2¨...4¨).
These are the dimensions:

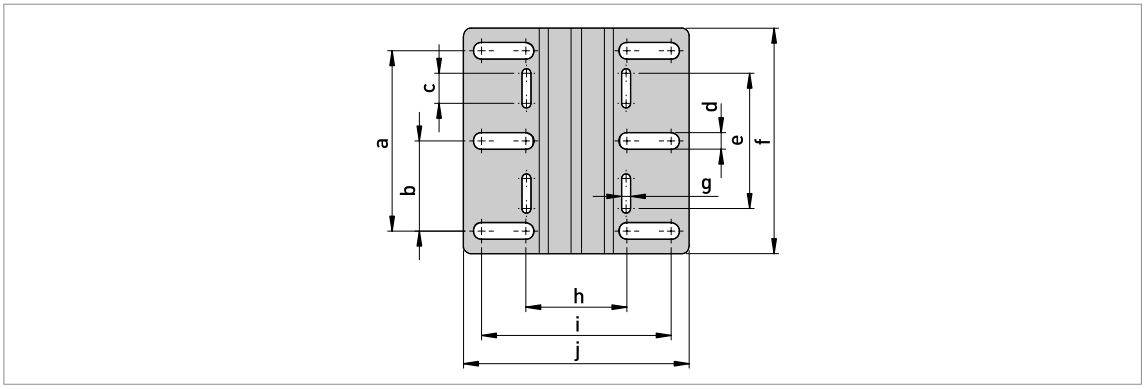

Figure 3-18: Dimensions of the wall bracket

Dimensions in mm

	Dimensions [mm]									
	a	b	c	d	e	f	g	h	i	j
Wall bracket	120	60	20	11	90	150	6	67.4	126.4	150.4

Dimensions in inches

	Dimensions [inches]									
	a	b	c	d	e	f	g	h	i	j
Wall bracket	4.7	2.4	0.8	0.4	3.5	5.9	0.2	2.65	4.98	5.92

3.11 Weather protection

3.11.1 How to attach the weather protection to the device

Equipment needed:

- Device.
- Weather protection (option).
- 10 mm wrench (not supplied).

The overall dimensions of the weather protection are.

- Loosen the bracket nuts on the weather protection.
- Remove the bracket.
- Lower the weather protection onto the device.
- Turn the weather protection so that the keyhole points forward.
- Attach the bracket.
- Lift the weather protection to the top of the housing support pillar.
- Hold the weather protection in the correct position and tighten the bracket nuts.

3.11.2 How to open the weather protection

Equipment needed:

- Weather protection attached to the device.
- Large slotted tip screwdriver (not supplied).

- Put a large slotted tip screwdriver into the keyhole at the front of the weather protection. Turn the screwdriver counterclockwise.
- Pull the top of weather protection up and forward.

➲ This will open the weather protection.

4.1 Safety instructions

DANGER!
All work on the electrical connections may only be carried out with the power disconnected. Take note of the voltage data on the nameplate!

DANGER!
Observe the national regulations for electrical installations!

DANGER!
For devices used in hazardous areas, additional safety notes apply; please refer to the Ex documentation.

WARNING!
Observe without fail the local occupational health and safety regulations. Any work done on the electrical components of the measuring device may only be carried out by properly trained specialists.

INFORMATION!
Look at the device nameplate to ensure that the device is delivered according to your order. Check for the correct supply voltage printed on the nameplate.

4.2 Electrical installation: 2-wire, loop-powered

4.2.1 Compact version

Terminals for electrical installation

Place holder

Figure 4-1: Terminals for electrical installation

① Grounding terminal in the housing (if the electrical cable is shielded)
② Current output -
③ Current output +
④ Location of the external grounding terminal (at the bottom of the converter)

INFORMATION!
Electrical power to the output terminal energizes the device. The output terminal is also used for HART® communication.

CAUTION!
- *Use the applicable electrical cables with the cable glands.*
- *Make sure that the power supply does not have a current more than 5 A or that there is 5 A-rated fuse in the electrical circuit that energizes the device.*

① Loosen the lock screw with a 2.5 mm Allen wrench.
② Turn the cover counterclockwise with a strap wrench.
③ Remove the cover.

Equipment needed:

- Small slotted tip screwdriver (not supplied)

Procedure:

① Do not disconnect the safety cord from the terminal compartment cover. Put the terminal compartment cover adjacent to the housing.
② Remove the connector from the circuit board.
③ Connect the electrical wires to the connector. Attach the connector to the circuit board. Tighten the cable entry glands.

① Put the cover on the housing and push it down.
② Turn the cover clockwise until it is fully engaged.
③ Tighten the lock screw.

4.2.2 Remote version

INFORMATION!
Electrical power to the output terminal energizes the device. The output terminal is also used for HART® communication.

CAUTION!
- *Use the applicable electrical cables with the cable glands.*
- *Make sure that the power supply does not have a current more than 5 A or that there is 5 A-rated fuse in the electrical circuit that energizes the device.*

For more electrical installation data, refer to *Compact version* on page 41.

4.3 Remote device data

4.3.1 Requirements for signal cables supplied by the customer

DANGER!
An Ex-approved signal cable is supplied by the manufacturer with devices for hazardous locations. Use of this signal cable is mandatory.

Non-Ex devices only: The signal cable is an option for non-Ex devices. If the signal cable is not supplied by the device manufacturer, the cable must have properties that follow:

Basic properties

- Twisted cable 2 by 2, shielded or screened. For example, multicore cable — reference MCD 5123 — from Cabletec ICS/JP Electronics.

Maximum length of the signal cable

- 100 m / 328 ft

Temperature

- Use electrical cable with the applicable temperature rating for the operating conditions.
- Ambient temperature range: -40...+80°C / -40...+175°F
- We recommend that the cable agrees with UL 94V-0.

Dimensions of the insulated conductors

- Min.-max. cross-sectional area of the conductors: 4×0.326...4×2.5 mm² (22....14 AWG), shielded cable
- Use the applicable cable for the cable glands (Ø6....10 mm / 0.24...0.39¨).
- Use the applicable cable glands for the cable entry openings in the housing.

Electrical characteristics

- Test voltage: Insulated conductor / shield (screen) ≥ 500 VAC
- Line resistance: < 55 Ω/km
- The cable must agree with EN 60811 (Low Voltage Directive) or equivalent national regulations.

4.3.2 How to prepare a signal cable supplied by the customer

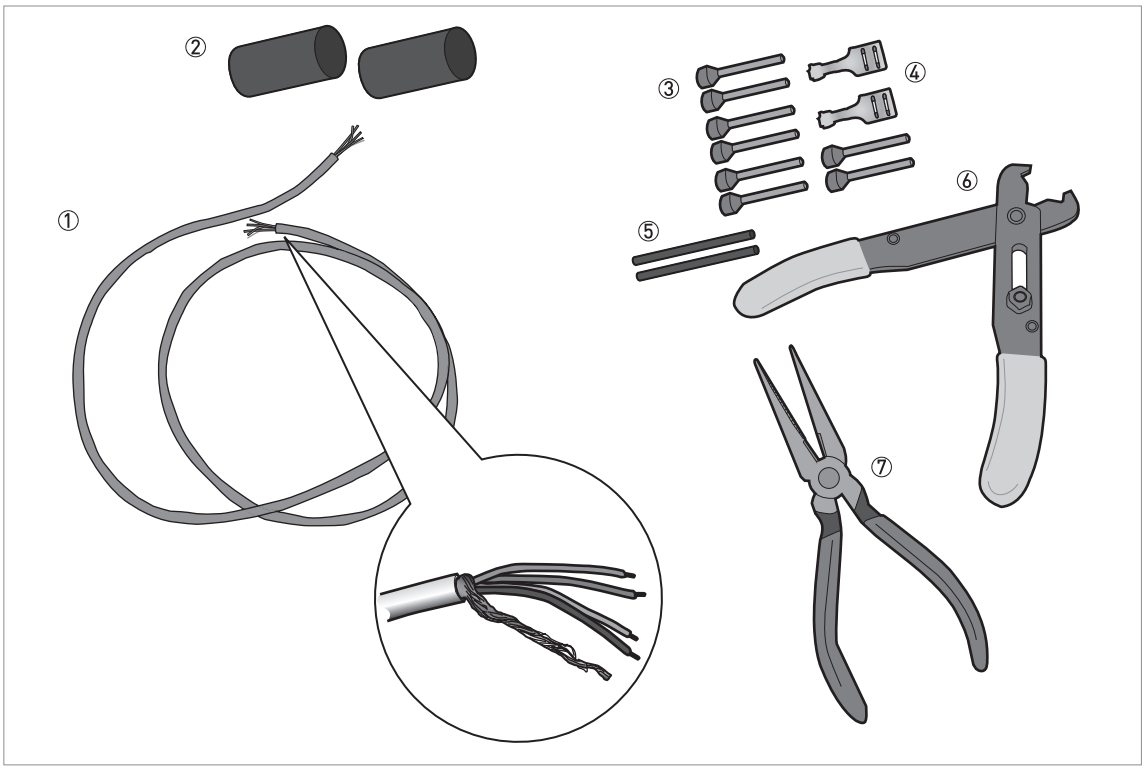

Figure 4-2: Equipment needed to prepare the signal cable

① Signal cable (supplied on request)
② 2 heat-shrinkable sleeves for the PVC jacket (not supplied)
③ 8 ferrules for the end of the conductors (not supplied)
④ 2 Faston connectors for the shield wires
⑤ Shield wire insulation, 2 sleeves
⑥ Wire stripper (not supplied)
⑦ Crimping pliers (not supplied)

INFORMATION!

- *The Faston connector for the stranded drain wire must agree with DIN 46 228: E 1.5-8*
- *The wire end ferrules for the twisted pair of conductors must agree with DIN 46 228: E 0.5-8*

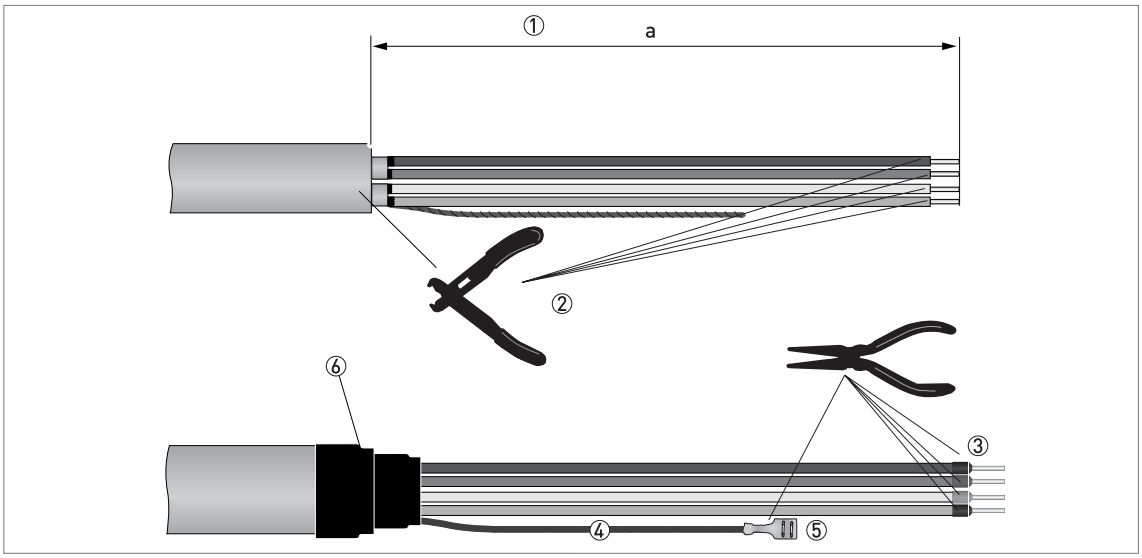

Figure 4-3: How to prepare the signal cable

① Remove the PVC jacket from the wire to dimension "a". a = 50 mm / 2".
② Remove the insulation from the wire. Obey national regulations for electrical wiring.
③ Crimp the wire end ferrules on the conductors.
④ Install shield wire insulation on the 2 ends of the shield wire.
⑤ Crimp the Faston connectors on the 2 ends of the shield wire.
⑥ Install a heat-shrinkable sleeve on the PVC jacket.

4.3.3 How to connect the signal cable to the device

DANGER!
Cables may only be connected when the power is switched off.

DANGER!
The device must be grounded in accordance with regulations in order to protect personnel against electric shocks.

DANGER!
For devices used in hazardous areas, additional safety notes apply; please refer to the Ex documentation.

WARNING!
Observe without fail the local occupational health and safety regulations. Any work done on the electrical components of the measuring device may only be carried out by properly trained specialists.

CAUTION!
Do not wind the signal cable. This configuration will prevent interference from electromagnetic fields.

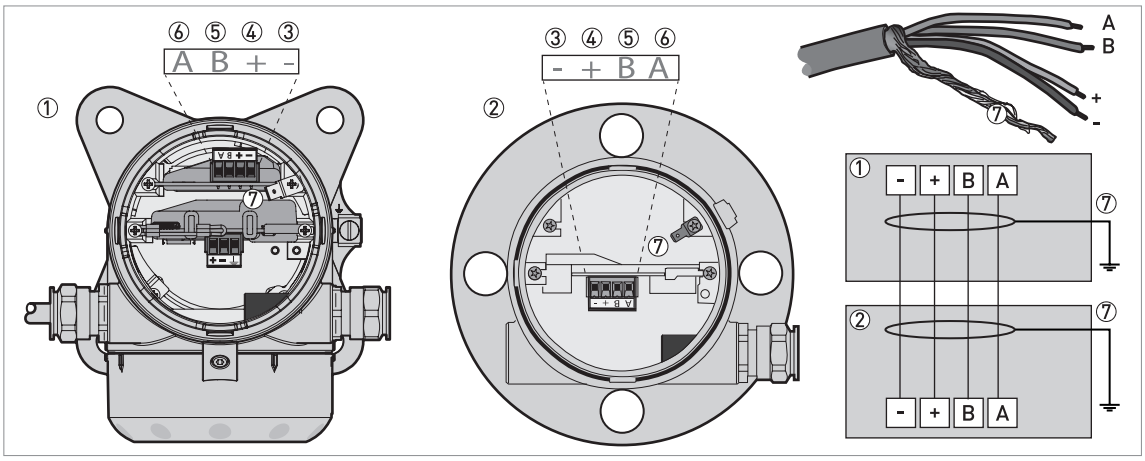

Figure 4-4:

① Remote converter
②
③ Power supply: voltage in -
④ Power supply: voltage in +
⑤ Signal cable B
⑥ Signal cable A
⑦)

How to connect the signal cable to the remote converter

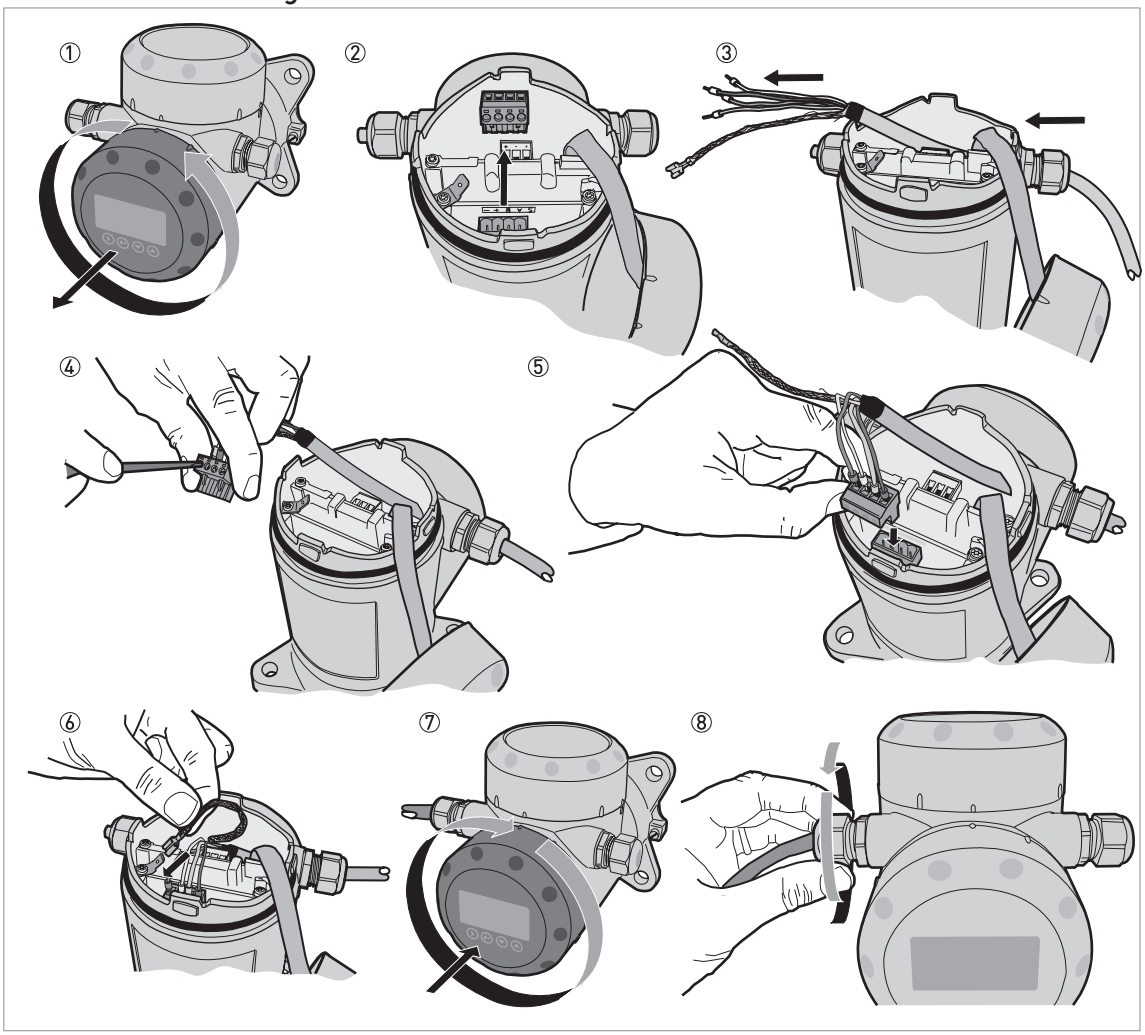

Figure 4-5: How to connect the signal cable to the remote converter

CAUTION!
Bending radius of the signal cable: ≥ 50 mm / 2"

① Remove the terminal compartment cover.
② Remove the 4-pin connector.
③ Put the signal cable into the opening of the cable gland.
④ Put the electrical wires in the connector terminals. Tighten the terminal screws with a small slotted-tip screwdriver. Make sure that the electrical wires agree with the terminals. For more data, refer to the electrical schema in this section.
⑤ Put the connector into the 4-pin socket.
⑥ Attach the Faston connector (drain wire).
⑦ Attach the terminal compartment cover.
⑧ Tighten the cable gland. Make sure that the remote converter is correctly sealed.

CAUTION!
Bending radius of the signal cable: ≥ 50 mm / 2"

① Remove the terminal compartment cover.
② Remove the 4-pin connector.
③ Put the signal cable into the opening of the cable gland.
④ Put the electrical wires in the connector terminals. Tighten the terminal screws with a small slotted-tip screwdriver. Make sure that the electrical wires agree with the terminals. For more data, refer to the electrical schema in this section.
⑤ Put the connector into the 4-pin socket. Attach the Faston connector (drain wire).
⑥ Attach the terminal compartment cover.
⑦ Tighten the cable gland. Make sure that the probe housing is correctly sealed.

4.4 Electrical connection for current output

4.4.1 Non-Ex devices

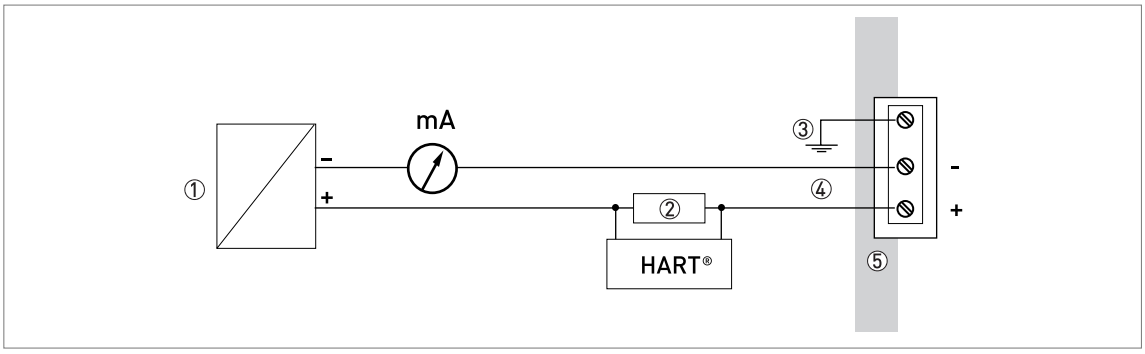

Figure 4-6: Electrical connections for non-Ex devices

① Power supply
② Resistor for HART® communication
③ Optional connection to the grounding terminal
④ Output: 11.5...30 VDC for an output of 22 mA at the terminal
⑤ Device

4.4.2 Devices for hazardous locations

DANGER!
For electrical data for device operation in hazardous locations, refer to the related certificates of compliance and supplementary instructions (ATEX, IECEx, cFMus, ...). You can find this documentation on the DVD-ROM delivered with the device or it can be downloaded free of charge from the website (Download Center).

4.5 Protection category

INFORMATION!
The device fulfils all requirements per protection category IP66 / IP67. It also fulfils all requirements per NEMA type 4X (housing) and type 6P .

DANGER!
Make sure that the cable gland is watertight.

4.6 Networks

4.6.1 General information

The device uses the HART® communication protocol. This protocol agrees with the HART® Communication Foundation standard. The device can be connected point-to-point. It can also have a polling address of 1 to in a multi-drop network.

The device output is factory-set to communicate point-to-point. To change the communication mode from **point-to-point** to **multi-drop**.

4.6.2 Point-to-point connection

Figure 4-7: Point-to-point connection (non-Ex)

① Address of the device (0 for point-to-point connection)
② 4...20 mA + HART®
③ Resistor for HART® communication
④ Power supply
⑤ HART® converter
⑥ HART® communication software

4.6.3 Multi-drop networks

Place holder

Figure 4-8: Multi-drop network (non-Ex)

① Address of the device (each device must have a different address in multidrop networks)
② 4 mA + HART®
③ Resistor for HART® communication
④ Power supply
⑤ HART® converter
⑥ HART® communication software

4.6.4 Fieldbus networks

For more data, refer to the supplementary instructions for FOUNDATION™ fieldbus and PROFIBUS PA.

FOUNDATION™ fieldbus network (non-Ex)

Place holder

Figure 4-9: FOUNDATION™ fieldbus network (non-Ex)

① Field device
② Junction box
③ H1 network
④ H1/HSE converter
⑤ High Speed Ethernet (HSE)
⑥ Workstation

PROFIBUS PA/DP network (non-Ex)

Place holder

Figure 4-10: PROFIBUS PA/DP network (non-Ex)

① Field device
② Bus termination
③ PROFIBUS PA bus segment
④ Segment coupler (PA/DP link)
⑤ PROFIBUS DP bus line
⑥ Control system (PLC / Class 1 master device)
⑦ Engineering or operator workstation (Control tool / Class 2 master device)

5.1 How to start the device

5.1.1 Start-up checklist

Check these points before you energize the device:

- Are all the wetted components (antenna, flange and gaskets) resistant to the product in the tank?
- Does the information on the signal converter nameplate agree with the operating data?
- Did you correctly install the device on the tank?
- Do the electrical connections agree with the national electrical codes? Use the applicable electrical cables with the cable glands.

DANGER!
Before you energize the device, make sure that the supply voltage and polarity are correct.

DANGER!
Make sure that the device and the installation agrees with the requirements of the Ex certificate of compliance.

5.1.2 How to start the device

- Connect the converter to the power supply.
- Energize the converter.
  - ➲ **Devices with the LCD display option only:** After 10 seconds the screen will display "Starting up". After 20 seconds the screen will display the software version numbers. After 30 seconds the default screen will appear.
- The device will display readings.

INFORMATION!
This chapter and the start of the chapter that follows tell you what data is given on the device display in normal mode and how to change device settings in configuration mode. If you know about how this device operates, you can ignore this data. Continue with the quick setup procedure. For more data about this procedure, refer to Quick Setup (Commissioning) on page 70.

5.2 Operating concept

You can read measurements and configure the device with:

- A digital display screen (optional).
- A connection to a system or PC with PACTware™. You can download the Device Type Manager (DTM) file from the website. It is also supplied on the DVD-ROM delivered with the device.
- A connection to a system or PC with AMS™. You can download the Device Description (DD) file from the website. It is also supplied on the DVD-ROM delivered with the device.
- A connection to a HART® Field Communicator. You can download the Device Description (DD) file from the website. It is also supplied on the DVD-ROM delivered with the device.

5.3 Digital display screen

5.3.1 Local display screen layout

Figure 5-1: Local display screen layout in Normal mode

① Current output percentage (bar graph and text — only shown if the current output function is the same as the measurement on the screen in normal mode)
② Measurement type (in this example, distance)
③ Device status (NE 107 symbols)
④ Device tag name
⑤ Updated measurement data symbol (the symbol flashes each time the measurement data is updated)
⑥ Measurement value and units
⑦ Device status (markers)
⑧ Keypad buttons (refer to the table in the section that follows)

The current output percentage is only shown if the measurement type (refer to item ② in the illustration) is the same as the output function. The parameter is set in menu item 2.4.1 (OUTPUT FUNC.). For example, if the output function is set to "Level" and the device shows "Level" measurements in normal mode, the bar graph and value is shown (refer to item ① in the illustration).

Place holder

Figure 5-2: Local display screen layout in configuration mode

① Function name
② Configuration mode symbol
③ Menu number

5.3.2 Functions of keypad buttons

Keypad button	Function
[Right]	**Normal mode:** Enter menu (Enter Configuration mode)
	Configuration mode: Move cursor to the right
[Return / Escape]	**Normal mode:** Change units (m, cm, mm, in, ft)
	Configuration mode: Exit
[Down]	**Normal mode:** Change measurement type (distance, level , output (%), output (mA), conversion, ullage conversion) ①
	Configuration mode: Decrease value or change parameter
[Up]	**Normal mode:** Change measurement type (distance, level , output (%), output (mA), conversion, ullage conversion, reflection) ①
	Configuration mode: Increase value or change parameter

① If you have made a strapping table in menu item 2.8.1 INPUT TABLE for volume or mass measurement, "Conversion" and "Ullage Conv." will be shown in the list of measurement types

For data on keypad functions, refer to *Normal mode* on page 57.

5.4 Remote communication with PACTware™

PACTware™ displays measurement information clearly on a computer (PC) and lets you configure the device from a remote location. It is an Open Source, open configuration software for all field devices. It uses Field Device Tool (FDT) technology. FDT is a communication standard for sending information between the system and the field device. Field devices are easily integrated. Installation is supported by a user-friendly Wizard.

Install these software programs and equipment:

- Microsoft® .NET Framework version 1.1 or later.

- PACTware.
- HART® converter (USB, RS232...).
- The Device Type Manager for the device.

The software and installation instructions are given on the DVD-ROM supplied with the device.

You can also download the latest version of PACTware™ and the DTM from our internet site.

Refer also to the PACTware™ consortium site at http://www.pactware.com.

Figure 5-3: Screen from the PACTware™ user interface

① DTM menu
② Information for device identification
③ Configuration summary

5.5 Remote communication with the AMS™ Device Manager

The AMS™ Device Manager is an industrial Plant Asset Management (PAM) software tool. Its role is to:

- Store configuration information for each device.
- Support HART® and FOUNDATION™ fieldbus devices.
- Store and read process data.
- Store and read diagnostic status information.
- Help plan preventive maintenance to reduce a plant's downtime to a minimum.

The DD file is given on the DVD-ROM supplied with the device. You can also download it from our website.

6.1 User modes

Normal mode

This mode displays measurement data. For more data, refer to *Normal mode* on page 57.

Configuration mode

Use this mode to view parameters, commission the device, create tables for volume or mass measurement, change critical values to measure in difficult process conditions. To get access to supervisor menu, refer to *Protection of the device settings* on page 73. For more data on menu items, refer to *Function description* on page 63.

6.2 Normal mode

This mode shows measurement data. Use the table that follows:

- for the selection of the measurement type (level, distance, percentage, conversion and reflection) and
- for the selection of the measurement units

Some measurement types will only be available if the device has the correct parameters entered in the configuration mode.

Measurement type definitions

Measurement type	Description	Available units
LEVEL	This is a display and an output function option. It is the height from the bottom of the tank to the surface of the liquid (Tank height - Distance).	m, cm, mm, in (inches), ft (feet)
DISTANCE	This is a display and an output function option. It is the distance from the face of the flange (or thread stop) to the surface of the liquid.	m, cm, mm, in (inches), ft (feet)
CONVERSION	This is a display and an output function option. It gives the volume or mass of the tank contents. This data is available if you prepare a volume or mass table in configuration mode. For data on how to prepare the conversion table, refer to *How to configure the device to measure volume or mass* on page 76. If the device is used with PACTware™ software, it can also show flow rate in a channel. 6 flow profiles are available in the menu: Parshall (ISO 9826), Venturi Rectangular (ISO 4359), Venturi Trapezoidal (ISO 4359), Venturi U (ISO 4359), V-Notch (ISO 1438) or Rectangular Notch (ISO 1438).	m3, L, gal (US gallons), ImpG (Imperial gallons), ft3, bbl (oil barrel), kg, t, Ston, Lton, m, cm, mm, in, ft, m3/h, ft3/h
ULLAGE CONV.	This is a display and an output function option. It gives the empty volume or remaining mass that can be put in the tank. This data is available if you prepare a volume or mass table in configuration mode. For data on how to prepare the conversion table, refer to *How to configure the device to measure volume or mass* on page 76.	m3, L, gal (US gallons), ImpG (Imperial gallons), ft3, bbl (oil barrel), kg, t, Ston, Lton, m, cm, mm, in, ft, m3/h, ft3/h
REFLECTION	This is a display and an output function option. It is the percentage of the emitted radar signal which makes a reflection on the surface of the liquid and is received by the device.	%
OUTPUT I (mA)	The current output of the device.	mA
OUTPUT I (%)	The percentage of the current output. 0% = 4 mA. 100% = 20 mA.	%

6.3 Configuration mode

6.3.1 General notes

Change the settings of your device in **Configuration** mode. Data about the menus is given on page 63. You can:

- Use the **1.0.0 INFORMATION** menu to read settings, device software versions and error records. For more data about the Information menu, refer to Table 1: Info.
- Use the **2.0.0 SUPERVISOR** menu to commission the device, to run diagnostic tests, set up a conversion table for volume, mass or flow rate measurement, change critical parameters for difficult process conditions, reset the device and change basic parameters (tank height etc.), output settings, HART Address etc. For more data about the Supervisor menu, refer to Table 2: Supervisor.

CAUTION!
The quick setup (commissioning) procedure is mandatory.

INFORMATION!
It is not possible to enter the 3.0.0 SERVICE and 4.0.0 MASTER menus. These menus are for factory calibration and approved personnel only.

6.3.2 How to get access to the commissioning menu

The Quick Setup menu contains the menu items that are necessary for most configurations of the device. The menu items are divided into 2 groups: "Commisioning" and "Recording Empty Spectrum". The "Commisioning" group lets the supervisor set the tank height, tank type (process, storage etc.), output function, output current range, 4 mA output setting, 20 mA output setting, error delay and tag name. "Recording Empty Spectrum" is a procedure that finds interference signals in the tank and uses a filter to remove them from the measurement data.

Do the steps that follow:

- Push the [>] button.
- ➲ This shows the **Information** menu. The **Information** menu is read only and does not have password security.
- Push the [▲] button one time to scroll up to the **Supervisor** menu.
- ➲ The screen shows the text "2.0.0 SUPERVISOR".
- Push the [>] button one time.
- ➲ The screen shows a line. You must enter the password. Push the buttons under the display screen 6 times (in total and in a given order) to get access to Configuration mode.
- Type in the password. The factory-set password is [>], [↵], [▼], [▲], [>] and [↵].
- ➲ The device shows the text "2.1.0 QUICK SETUP".

INFORMATION!
HOW TO SET THE SUPERVISOR PASSWORD TO "ON" OR "OFF"
The supervisor password is set to "on" by default. If it is necessary to set this function to "off", refer to Function description on page 63, Table 2: Supervisor menu, menu item PSWD YES/NO (2.7.4).

INFORMATION!
HOW TO CHANGE THE SUPERVISOR PASSWORD
You can change the password for the supervisor menu. For more data, refer to Function description on page 63, Table 2: Supervisor menu, menu item PASSWORD (2.7.5).

6.3.3 Keypad functions

Place holder

Figure 6-1: Local display screen layout in configuration mode

① Function name
② Configuration mode symbol
③ Menu number

This is what you see when you are in Configuration mode. The functions of the buttons are given in the table that follows:

Functions of buttons for menu navigation

Button	Description	Function
☞	Right	• Go down to the sub-menu level (for example, from menu 1.0.0 to sub-menu 1.1.0). • Enter the menu item
☞	Enter / Esc (Escape)	• Go up to the menu level (for example, from sub-menu 1.1.0 to menu 1.0.0). • Go to Normal mode. If you changed settings in Configuration mode, you must save or cancel your new settings. For more data, refer to the end of this section.
☞	Down	• Scroll down the menu list (for example, from menu 2.0.0 to menu 1.0.0). • Scroll down the sub-menu list (for example, from sub-menu 2.2.0 to sub-menu 2.1.0).
☞	Up	• Scroll up the menu list (for example, from menu 1.0.0 to menu 2.0.0). • Scroll up the sub-menu list (for example, from sub-menu 2.1.0 to sub-menu 2.2.0).

Lists of parameters in menu items

Place holder

Figure 6-2: Lists of parameters in menu items

① Parameter
② Menu name

This is what you see when you select a menu item that has a list of parameters. The functions of the buttons are given in the table that follows:

Function of buttons in menu items that have a list of parameters

Button	Description	Function
☞	Right	n/a
☞	Enter / Esc (Escape)	Select the parameter and go back to the menu
☞	Down	Move down the list
☞	Up	Move up the list

Values in menu items

Place holder

Figure 6-3: Values in menu items

① Menu item with values stored at this time (first screen)
② Push [>] again to change the values. A cursor shows on the first digit.
③ Menu item name
④ Cursor on the selected digit

This is what you see when you select a menu item that has a value. The functions of the buttons are given in the table that follows:

Function of buttons in menu items that have values

Button	Description	Function
☞ ⊙	Right	• Enter the menu item and see the value stored at this time. • Enter the menu item configuration level to change the value. • Move the cursor to the next digit on the right. If the cursor is on the last digit, push [>] again to go back to the first digit.
☞ ⊙	Enter / Esc (Escape)	Accept the value and go back to the sub-menu.
☞ ⊙	Down	Decrease the digit value.
☞ ⊙	Up	Increase the digit value.

How to save settings changed in the supervisor menu (menu 2.0.0)

- When you have changed parameters in all the necessary menu items, push [↵] to accept the new parameter.
- Push [↵] to go back to the "STORE" screen.
- The device will ask you to save or cancel your settings. Push [▲] or [▼] to select **STORE YES** or **STORE NO**. Push [↵] to accept or reject the new settings.

➲ The display goes back to Normal mode.

6.3.4 Menu overview

1.0.0 Info. (Information)

1.1.0	Ident. (Identification)
1.2.0	Output
1.3.0	History

2.0.0 Supervisor

2.1.0	Quick Setup
2.2.0	Tests
2.3.0	Basic Parameters
2.4.0	Output I
2.5.0	Application
2.6.0	Communication
2.7.0	Display
2.8.0	Conversion
2.9.0	Config/Reset

3.0.0 Service

n/a	Password locked. Menus for factory calibration and qualified service personnel only.

4.0.0 Master

n/a	Password locked. Menus for factory calibration and qualified service personnel only.

6.3.5 Function description

1.0.0 Information (Info.) menu

Menu No.	Function	Function description	Selection list	Default

1.1.0 IDENT.

1.1.1	SERIAL NUM.	The device serial number.	Read only.	
1.1.2	CONV.FIRM.VER	The converter firmware version.	Read only.	
1.1.3	SEN.FIRM.VER	The sensor firmware version.	Read only.	
1.1.4	HMI.FIRM.VER	The HMI (device display screen) firmware version.	Read only.	
1.1.5		The converter hardware version.	Read only.	
1.1.5		The sensor hardware version.	Read only.	
1.1.8		The HMI (device display screen) hardware version.	Read only.	
1.1.9		The date of manufacture.	Read only.	

1.2.0 OUTPUT

1.2.1	OUTPUT FUNC.	This shows the setting at this time for the output function (OUTPUT FUNC.).	Read only.	
1.2.2	RANGE I	This shows the setting at this time for the output range (RANGE I).	Read only.	
1.2.3	SCALE 4mA	This shows the setting at this time for the 4 mA setting (SCALE 4mA).	Read only.	
1.2.4	SCALE 20mA	This shows the setting at this time for the 20 mA setting (SCALE 20mA).	Read only.	
1.2.5	ERROR DELAY	This shows the settings at this time for the error delay (ERROR DELAY).	Read only.	

1.3.0 HISTORY

1.3.1	ERROR RECORD	A log of device errors. Push [>] to read the errors. Push [▲] or [▼] to scroll up or down the list. Each error is identified by a code. Push [>] again to show the number of incidents and the time since the last incident in days, hours, minutes and seconds. For more data about errors, refer to *Status and error messages* on page 79.	Read only.	
1.3.2		A log of the last 10 changes to the device settings. Push [▲] or [▼] to scroll up or down the list. Push [>] to show the time since the last change in days, hours, minutes and seconds.	Read only.	

2.0.0 Supervisor menu

Menu No.	Function	Function description	Selection list	Default

2.1.0 COMMISSION.

2.1.1	PARAMETERS	This starts a quick set-up procedure applicable to most applications. The supervisor can give the display language (LANGUAGE), tank height (TANK HEIGHT), type of tank (TANK TYPE), output function (OUTPUT FUNC.), current output range (RANGE I), 4 mA setting (SCALE 4mA), 20 mA setting (SCALE 20mA), error delay (ERROR DELAY) and tag name (TAG NAME).		
2.1.2	EMP.SPEC.REC.	Fixed and moving objects in the tank cause interference signals. Put them through this filter to correctly measure the tank contents. A quick set-up procedure will go through the steps that follow (refer also to "How to make a filter to remove radar signal interference" on page 77):		
	①	**Do you have a completely filled tank?** If the tank is full, it is not possible to complete this procedure. The tank must be partially filled or empty.	Yes [>], No [▲]	
	②	**Please, activate moving parts!** We recommend that you switch on moving equipment to filter all interference signals.	OK [>]	
	③	**Is your tank partially filled or empty?** If the tank is partially filled, the device must include the tank contents when it filters the signal.	Partially [>], Empty [▲]	
	④	**MEAS.DISTANCE** If the tank is partially filled, type in a distance shorter than that between the flange and the tank contents.	min-max: 0…tank height (2.3.1)	distance to tank contents - 300 mm / 12¨
	⑤	**Emp.Spec.Type** Use the average value for tanks which contain fixed objects only. Use the maximum value for tanks which contain many objects or moving objects.	Maximum, Average	?
	⑥	**Recording in progress** **Reading in progress**		
	⑦	**Empty spectrum graph** This shows a set of spectra (signals found in the tank). It also gives the amplitude and location of each signal. Push [>] to make a selection from the available spectra.		
	⑧	Do you want to save the empty spectrum data?	Yes [>], No [▲]	

2.2.0 TESTS

2.2.1	SET OUTPUT	This sets the current output to a test value [mA]. The output will change to the given value, independent of the measured value. The current output will go back to the measured value when the display goes back to the menu level.	3.5, 4, 6, 8, 10, 12, 14, 16, 18, 20 or 22 mA	3.5 mA

Menu No.	Function	Function description	Selection list	Default
2.2.2	DIAGNOSTIC	This starts the hardware test. Push [>] many times to show: • D1, the time of operation • T1, temperature of the electronic converter board • I1, loop current (internally measured value) • I2, load current (NOTE: this data is not available at this time) • V1, voltage 5.6 V. If the voltage is not 5.0<V1<5.7, speak to the supplier. • V2, voltage on capacitors. If the voltage is not 3.2<V2<3.4, speak to the supplier. • V3, voltage 3.3 V. If the voltage is not 3.2<V3<3.4, speak to the supplier. • C1, reset counter (watchdog timer). If C1>1, replace the signal converter. If an NE 107 symbol and a status marker are shown, refer to *Device status (markers)* on page 79. If you push [>] again, the display goes back to the menu level.		
2.2.3.		The corrected spectrum. TBD.		

2.3.0 BASIC PARAM.

2.3.1	TANK HEIGHT	The distance from the flange face / thread stop of the tank connection down to the tank bottom. If the tank has a dish-shaped or conical bottom, the tank height is measured to a point on the tank bottom directly below the antenna. For more data about level measurement, refer to *Level measurement* on page 75. For more data about distance measurement, refer to *Distance measurement* on page 74.	min-max: 0…30 m / 0…98.4 ft	①
2.3.2	BLOCK. DIST.	Blocking distance. The distance from the flange to the top limit of the measuring range (a zone given by the user where it is not possible to measure). We recommend a blocking distance of 500 mm / 19.7¨ below the process connection. We also recommend that the limit of the measuring range is not less than the blocking distance. If it is possible that the tank contents will go above the blocking distance, set 2.5.5 OVERF. ENAB. to "Yes". If the distance is less than the blocking distance, the device continues to display the blocking distance.	min: 100 mm / 13.9¨ or 2.3.6 ANTENNA.EXT max: 2.3.1 TANK HEIGHT	500 mm / 19.7¨
2.3.3	TIME CONST.	Using this function, the device processes several measurement readings to filter out disturbances. Increasing the time constant will smoothen the integrated readings, decreasing will roughen the readings. s=seconds.	min-max: 1.00...100.00 s	5.00 s
2.3.4	TAG NAME	The device has an identification code (tag name). The supervisor can enter a maximum of 8 numbers or letters.		①
2.3.5	ANTENNA.EXT	Optional antenna extensions.These are attached between the flange and the antenna.	min: 0 mm / 0¨ or 2.3.6 ANTENNA.EXT max: 2000 mm / 78.7¨ or 2.3.1 TANK HEIGHT	①

Menu No.	Function	Function description	Selection list	Default
2.3.6	DIST.PIECE	Optional distance piece between the converter and the process connection. This is for high-temperature applications more than +150°C / +302°F. The distance piece is 120 mm / 4.7¨ long. For more data, refer to *Technical data* on page 90.	min: 0 mm / 0¨ max: TANK HEIGHT	①
2.3.7		Reference offset. Offset relating to a reference location (distance). This value is positive when the reference location is above the device flange face and negative if below. For more data, refer to *Distance measurement* on page 74.	min-max: -tank height...50 m / -tank height...164.05 ft	0 m / 0 ft
2.3.8		Tank bottom offset. Offset relating to a reference location (level). The device reference point for this parameter is the bottom of the tank (set in menu item C.1.2.0). This value is positive when the reference location is below the tank bottom and negative if above. For more data, refer to *Level measurement* on page 75.	min-max: -tank height...3000 m / -tank height...9843 ft	0 m / 0 ft

2.4.0 OUTPUT I

2.4.1	OUTPUT FUNC.	The output function. Select an output function to scale the current values in relation to a given point (usually the device process connection or the tank bottom). The output current value is shown on a bar graph in normal mode if the measurement type is the same as the output function. Conversion parameters are shown (Conversion, Ullage conversion) if there is level-volume, level-mass or level-flow rate data in 2.8.1 INPUT TABLE.	Distance, Level, Conversion, Ullage conversion, Reflection	①
2.4.2	RANGE I	This menu item sets the limits of the output current range to 1 of the 2 available options: standard limits (4...20 mA) or NAMUR NE 43-compliant limits (3.8...20.5 mA). It also tells the device what to do if an error occurs. if you set RANGE I to **4-20/22E** and an error occurs (e.g. the tank is too full, ...), the device output current will change to an error value of 22 mA . If you set RANGE I to **4-20** and the device senses a measurement error, the value will stop at the last correct measurement.	4-20, 4-20/22E, 4-20/3.6E, 3.8-20.5/22E, 3.8-20.5/3.6E	4-20/3.6E
2.4.3	SCALE 4mA	This gives a measurement value to 4 mA.	min.-max: ②	①
2.4.4	SCALE 20mA	This gives a measurement value to 20 mA.	min.-max: ②	①
2.4.5	ERROR DELAY	The time after which the current output changes to an error value. The error value shows that there is a measurement error. mn=minutes and s=seconds.	0 s, 10 s, 20 s, 30 s, 1 mn, 2 mn, 5 mn,15 mn	0 s

2.5.0 APPLICATION

2.5.1	TANK TYPE	The conditions in which the device is used. If the surface of the product is flat, select "Storage". If the surface of the product is disturbed, select "Process". If the surface of the product is agitated with vortexes and foam, select "Agitator".	Storage, Process, Agitator	Process

Menu No.	Function	Function description	Selection list	Default
2.5.2	STILLWELL D.	The inner diameter of the stilling well. If the device is installed in a stilling well or has a Wave-Guide antenna, enter the diameter. The device will use this data if you set 2.3.4 STILLWELL EN. to "Yes". This menu item is not shown if you set 2.3.4 STILLWELL EN. to "No".	min-max: 22...999 mm / 0.9...39.3"	①
2.5.3	TRACING VEL.	Maximum tracking velocity. This value must agree with the maximum rate of change of the level of the liquid in the tank.	min-max: 0.1…10.0 m/min	0.5 m/min
2.5.4	MEASUR.MODE	The device uses the dielectric constant (ε_r) of the tank contents to monitor level. In direct mode (if the dielectric constant is high), the level signal is a reflection on the surface of the tank contents. If the dielectric constant is low, the device uses TBF mode. The device in TBF mode uses the radar reflection on the bottom of the tank (the signal goes through the tank contents). The tank must have a flat bottom for the device to operate correctly in TBF mode. This menu item is set by default to "Direct" for tank contents with an ε_r >1.8. If ε_r is very low (<1.6), use "TBF Full". If ε_r is low (ε_r = 1.5...1.7), use "TBF Partial" mode. "TBF Partial" is an automatic mode that lets the device make a selection between "Direct mode and "TBF" mode. If you use "TBF Full" or "TBF Partial", enter the dielectric constant in menu item 2.5.3 Er PRODUCT. Refer also to "Measuring principle" on page 90.	Direct, TBF Partial, TBF Full	Direct
2.5.5	Er PRODUCT	For measurement in TBF mode only. The device automatically calculates the level based on the product ε_r. If you select "TBF Partial" or "TBF Full" in menu item 2.5.4 MEASUR.MODE, you can change the ε_r value manually to adjust readings.	min-max: 1.100 to 10.000	2.000
2.5.6	OVERF. ENAB.	If this function is in operation, the device will monitor the level even if it is in the blocking distance. The reading shown on the display stays fixed at the blocking distance if the level is higher than the blocking distance. The output will show that the tank is full. An error is recorded by default. If this function is not in operation, the device looks for the largest signal between the process connection and the tank bottom.	YES, NO	NO
2.5.7	OVERF. THRESH.	The overfill threshold. TBD.		

Menu No.	Function	Function description	Selection list	Default
2.5.8	MULT.REF.EN.	Multiple reflections will cause the device to display smaller level readings. Objects in the tank, sharp corners, installation of the device on a large nozzle or at the centre of a dome roof, and low dielectric products (ε_r = 1.8...5) can cause multiple reflections. A very calm surface or a tank with a small convex or flat roof can also cause multiple reflections. If this function is in operation, the device looks for the first signal peak below the process connection. This signal peak is then used to measure the level of the tank contents. If this function is not in operation, the device looks for the largest signal below the process connection.	YES, NO	NO
2.5.7	EMP.SPEC.EN.	The supervisor can start or stop the empty spectrum filter.	YES, NO	NO

2.6.0 COMMUNICAT.

2.6.1	ADDRESS	Any HART® address greater than 0 will activate HART® multidrop mode. The current output stays constant at 4 mA.	min.-max: 0…63	0
2.6.2		Each HART value (PV (primary value), SV (secondary value), TV (tertiary value) and QV (quaternary value)) can be set to a different measurement type (level, distance, reflectivity, conversion, ullage conversion).		

2.7.0 DISPLAY

2.7.1	LANGUAGE	Data can be shown in any of the languages stored in the device.	9 languages are available in 3 packs: (1) English, French, German and Italian; (2) English, French, Spanish and Portuguese; (3) English, Chinese (Mandarin), Japanese and Russian	③
2.7.2	LENGTH UNIT	The length unit shown in normal mode.	m, cm, mm, in (inches), ft (feet)	m
2.7.3	CONV UNIT	Conversion unit. The length, volume, mass or flow rate conversion unit for the conversion table and shown in normal mode.	m3, L, gal (US gallons), ImpG (Imperial gallons), ft3, bbl (oil barrel), kg, t, Ston, Lton, m, cm, mm, in, ft, m3/h, ft3/h	L
2.7.4	PSWD YES/NO	If it is necessary to protect your settings in the supervisor menu with a password, set this menu item to **YES**.	YES, NO	YES
2.7.5	PASSWORD	This changes the password for the supervisor menu. Push the buttons up to 6 times in any order. This will be the new password. To confirm the change, enter the new password a second time. For more data, refer to *Protection of the device settings* on page 73.		[>], [↵], [▼], [▲], [>] and [↵]
2.7.6	CONTRAST	The contrast control for the display screen. You can select a shade of grey between light grey (level 20) and black (level 54).	min.-max: 20…54	36

Menu No.	Function	Function description	Selection list	Default
2.7.7		If it is not easy to read the data on the LCD display screen, this menu item operates the display screen light. If you set this menu item to **YES**, the light comes on.	YES, NO	NO

2.8.0 CONV. TABLE

2.8.1	INPUT TABLE	The device uses a conversion table (strapping table) to convert measurements to volume, mass and flow rate readings. The readings are shown in normal mode. Give the number of entries on the table (min. 2; max. 30). Select an entry (01...30) and enter the level and the related volume / mass / flow rate value for that entry. Push [↵] to confirm the entry values. Continue the procedure until the device has data for all the entries. For more data, refer to *How to configure the device to measure volume or mass* on page 76.	min. 2 entries max. 30 entries (level / volume, mass or flow rate)	0 entries
2.8.2	DELETE TABLE	This menu item erases the data in the conversion table.	YES, NO	NO

2.9.0 CONFIG/RESET

2.9.1	SAVE	This menu item is not available.	YES, NO	NO
2.9.2	RECALL	This menu item is not available.	YES, NO	NO
2.9.3	RESTART	This menu item starts the device again.	YES, NO	NO
2.9.4	RESET FACT.	If you set this menu item to "YES", the device goes back to its initial settings (set by the manufacturer in the factory).	YES, NO	NO

① This value is given in the customer order data
② Units and range depend on the output function, length unit and volume unit selected
③ If the device has the LCD display option, this depends on data given in the customer order

3. Service menu

Menu No.	Function	Function description	Selection list	Default
3.0.0	SERVICE	Advanced settings. The settings in this menu are protected with a password. Only approved personnel can change the parameters in this menu. For more data, speak or write to your local sales office.		

4. Master menu

Menu No.	Function	Function description	Selection list	Default
4.0.0	MASTER	Factory settings. The settings in this menu are protected with a password. Only approved personnel can change the parameters in this menu. For more data, speak or write to your local sales office.		

6.4 Further information on device configuration

6.4.1 Quick Setup (Commissioning)

Use this procedure to change the tank height, tank type, output function, output range and give the top and bottom measuring limits. Values and parameters that can be changed are shown between the « ... » marks in the illustrations that follow. Push the keypad buttons in the correct sequence:

CAUTION!
Make sure that you do this procedure before you use the device. The settings in this procedure have an effect on the performance of the device.

Procedure

Screen	Steps	Description
VMI_2 LEVEL 5000 mm 0%	• [>], [▲] and [>].	Default screen. Enter configuration mode (2.0.0 SUPERVISOR).
VMI_2 2.0.0 _____	• [>], [↵], [▼], [▲], [>] and [↵].	Enter the password (the default password is shown). If it is necessary to change the password, menu item 2.7.5 PASSWORD.
VMI_2 2.1.1 PARAMETERS	• 2 × [>]	Push this button to start the quick set-up procedure.
VMI_2 TANK HEIGHT «25000»	• [>] to change the tank height (H). • [>] to change the position of the cursor. • [▼] to decrease the value or [▲] to increase the value. • [↵] to confirm.	The distance from the flange face / thread stop of the tank connection down to the tank bottom. If the tank has a dish-shaped or conical bottom, the tank height is measured to a point on the tank bottom directly below the antenna. 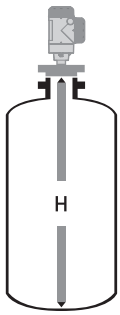
VMI_2 TANK TYPE «PROCESS»	• [▲] or [▼] for the selection of the conditions in which the device is used (Storage, Process, Agitator). • [↵] to confirm.	If the surface of the product is flat, select "Storage". If the surface of the product is disturbed, select "Process". If the surface of the product is agitated with vortexes and foam, select "Agitator".

Screen	Steps	Description
VMI_2 OUTPUT FUNC. «Level»	• [▲] or [▼] for the selection of the measurement name (Distance, Level, Conversion, Ullage Conv. or Reflection). • [↵] to confirm.	The manufacturer sets the output function to “Level” before delivery. If it is necessary to measure volume, ullage volume, mass or ullage mass (Conversion or Ullage Conv.), refer to *How to configure the device to measure volume or mass* on page 76.
VMI_2 RANGE I «4-20/3.6E»	• [▲] or [▼] for the selection of the current output range (4-20 mA/3.6E, 4-20, 3.8-20.5/3.6E, etc.). • [↵] to confirm.	
VMI_2 SCALE 4 mA «00000»	• [>] to change Scale 4 mA. • [>] to change the position of the cursor. • [▼] to decrease the value or [▲] to increase the value. • [↵] to confirm.	Use this step to give the 4 mA output setting (0% limit) in the tank. Refer to the illustrations that follow. Illustration ① shows the settings for level. Illustration ② shows the settings for distance. 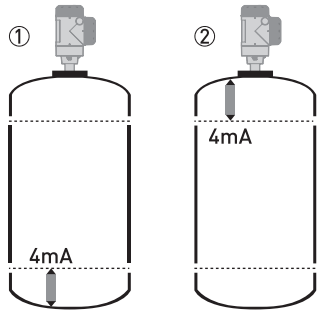
VMI_2 SCALE 20 mA «03350»	• [>] to change Scale 20 mA. • [>] to change the position of the cursor. • [▼] to decrease the value or [▲] to increase the value. • [↵] to confirm.	Use this step to give the 20 mA output setting (100% limit) in the tank. Refer to the illustrations that follow. Illustration ① shows the settings for level. Illustration ② shows the settings for distance. 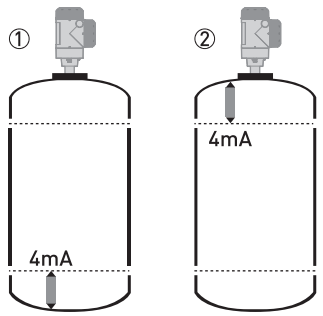
VMI_2 ERROR DELAY «10 S»	• [▲] or [▼] for the selection of the error delay (0 s, 10 s, 20 s, 30 s, 1 mn, 2 mn, 5 mn or 15 mn). • [↵] to confirm.	The time after which the current output changes to an error value. The error value shows that there is a measurement error.

Screen	Steps	Description
TANK 01 TAG NAME «TANK 01»	• [>] to change the tag name. • [>] to change the position of the cursor. • [▼] to decrease the alphanumeric value (A, B, ..., 1, 2, ...) or [▲] to increase the alphanumeric value. • [↵] to confirm.	The device has an identification code (tag name). The supervisor can enter a maximum of 8 numbers or letters.
VMI_2 2.0.0 «STORE NO»	• 2 × [↵] to confirm. • [▲] or [▼] for the selection of the save option (STORE NO or STORE YES). • [↵] to confirm.	Set to STORE YES to save and use the data. Set to STORE NO to cancel the changes to the device settings.

6.4.2 Test

Use this procedure to test the loop current. Values and parameters that can be changed are shown between the « ... » marks in the illustrations that follow. Push the keypad buttons in the correct sequence:

Procedure

Screen	Step	Description
VMI_2 LEVEL 5000 mm 0%		Default screen.
VMI_2 2.0.0 _____	• [>], [▲] and [>].	
	• Enter the password: [>], [↵], [▼], [▲], [>] and [↵]. • [↵]	
VMI_2 2.2.0 TESTS	• [▲].	
VMI_2 2.2.1 SET OUTPUT	• [>].	

Screen	Step	Description
VMI_2 SET OUTPUT «3.5 mA»	• [>]. • [▼] to decrease the value or [▲] to increase the value. • [↵] to confirm.	This step sets the loop current value. Make a selection from 3.5, 4, 6, 8, 10, 12, 14, 16, 18, 20 or 22 mA.
VMI_2 LEVEL 5000 mm 0%	• [↵] 3 times to go back to the default screen.	The loop current goes back to initial value. Default screen.

6.4.3 Protection of the device settings

The menu item PASSWORD (2.7.5) lets you change the supervisor menu password.

How to change the supervisor menu password

- After you enter the supervisor menu, push 6 × [▲], [>] and 4 × [▲] to go to the menu item PASSWORD (2.7.5).
- Enter the new 6-character password (push the 4 buttons in any sequence).
- Enter the new 6-character password again.

➲ If the second entry is the same as the first, the device will go back to the sub-menu list (2.7).If the second entry is not the same as the first, the device will not go back to the sub-menu list. Push [↵] to start the password sequence again and enter the new 6-character password 2 times.

- Push [↵] to go back to the "STORE" screen.
- Push [▲] or [▼] to set the screen to **STORE YES** and push [↵].

➲ The device will save the new password and go back to normal mode.

INFORMATION!
Make a note of the password and keep it in a safe place. If you lose the password, please speak or write to your supplier.

How to set the supervisor password to "on" or "off"

The supervisor password is set to "on" by default. If it is necessary to set this function to "off" refer to *Function description* on page 63, Table 2: Supervisor menu, menu item PSWD YES/NO (2.7.4).

6.4.4 HART® network configuration

INFORMATION!
For more data, refer to Networks on page 49.

The device uses HART® communication to send information to HART®-compatible equipment. It can operate in either point-to-point or multidrop mode. The device will communicate in multidrop mode if you change the address.

CAUTION!
Make sure that the address for this device is different from others in the multidrop network.

How to change from point-to-point to multidrop mode

- Enter the supervisor menu.
- Push [>], 5 × [▲] and [>] to go to menu item ADDRESS (2.6.1).
- Push [>] to change the value. Enter a value between 1 and and push [↵] to confirm (refer to the caution before this procedure).
- Push [↵] to go back to the "STORE" screen.
- Push [▲] or [▼] to set the screen to **STORE YES** and push [↵].

➲ The output is set to multidrop mode. The current output is set to 4 mA. This value does not change in multidrop mode.

How to change from multidrop to point-to-point mode

- Enter the supervisor menu.
- Push [>], 5 × [▲] and [>] to go to menu item ADDRESS (2.6.1).
- Push [>] to change the value. Enter the value 0 and push [↵] to confirm.
- Push [↵] to go back to the "STORE" screen.
- Push [▲] or [▼] to set the screen to **STORE YES** and push [↵].

➲ The output is set to point-to-point mode. The current output changes to a range of 4...20 mA or 3.8...20.5 mA (this range is set in menu item RANGE I (2.4.2)).

6.4.5 Distance measurement

The device displays distance measurements when the output function is set to "Distance".

Menu items related to distance measurement are:

- Output Function (2.4.1)
- Tank Height (2.3.1)
- Blocking Distance (2.3.2)

Use the flange facing as the reference point for the 4 and 20 mA current output settings. The 4 and 20 mA current output settings are the minimum and maximum points of the measurement scale.

You can change the reference point from which distance is measured. Use this menu item:

- Reference Offset (2.3.7)

INFORMATION!
If you move the reference point above the flange, add this value when you give a distance for the 4 and 20 mA current output settings. If you move the reference point below the flange, subtract this value when you give a distance for the 4 and 20 mA current output settings.

CAUTION!
If the distance for 4 mA is set in the blocking distance, the device will not be able to use the full current output range.

Place holder

Figure 6-4: Distance measurement

① Tank Height (2.3.1)
② Reference Offset (2.3.7)
③ Blocking Distance (2.3.2)
④ 4 mA Setting (2.4.3)
⑤ 20 mA Setting (2.4.4)
⑥ Maximum effective measuring range
⑦ Non-measurement zone

6.4.6 Level measurement

The device displays level measurements when the output function is set to "Level".

Menu items related to level measurement are:

- Output Function (2.4.1)
- Tank Height (2.3.1)
- Blocking Distance (2.3.2)

You can change the reference point from which level is measured. Use this menu item:

- Tank Bottom Offset (2.3.8)

CAUTION!
If the level for the 20 mA is set in the blocking distance, the device will not be able to use the full current output range.

Place holder

Figure 6-5: Level measurement

① Tank Bottom Offset (2.3.8)
② Tank Height (2.3.1)
③ Blocking Distance (2.3.2)
④ Maximum effective measuring range
⑤ 20 mA Setting (2.4.4)
⑥ 4 mA Setting (2.4.3)
⑦ Non-measurement zone

6.4.7 How to configure the device to measure volume or mass

The device can be configured to measure volume or mass. You can set up a strapping table in the conversion table (2.8.0 CONV. TAB) sub-menu. Each entry is a pair of data (level – volume, level – mass or level – flow rate). The strapping table must have a minimum of 2 entries and a maximum of 30. The reference point for the table is the bottom of the tank (as given in menu item 2.3.1 TANK HEIGHT).

CAUTION!
Enter the data in numerical sequence (strapping table entry number 01, 02 etc.).

How to prepare a strapping table (conversion table)

- Enter the supervisor menu.
- Push [>], 6 × [▲], [>] and [▲] to go to 2.7.2 LENGTH UNIT.
- Push [▲] and [▼] to find the length unit that you will use in the table.
- Push [↵] to go to the sub-menu level.
- Push [▲] to go to 2.7.3 CONV UNIT (conversion unit)
- Push [▲] and [▼] to find the conversion unit that you will use in the table.
- Push [↵] to go to the sub-menu level and then [▲] and [>] to go to the menu item 2.8.1 INPUT TAB
- Push [>] to make the strapping table. Enter the table entry number (01).
- Enter the length value and push [↵].
- Enter the conversion value and push [↵].
- Push [>] to enter the subsequent table entry number (02, 03, ..., 30).
- Repeat the last 3 steps to complete the table.
- Push [↵] to go back to the "STORE" screen.
- Push [▲] or [▼] to set the screen to **STORE YES** and push [↵].

➲ The device will store the data for the strapping table and go back to normal mode.

The device will give more accurate volume readings if you give more conversion data in these areas:

- Surfaces with curves.
- Sudden changes in the cross section.

Refer also to the illustration that follows:

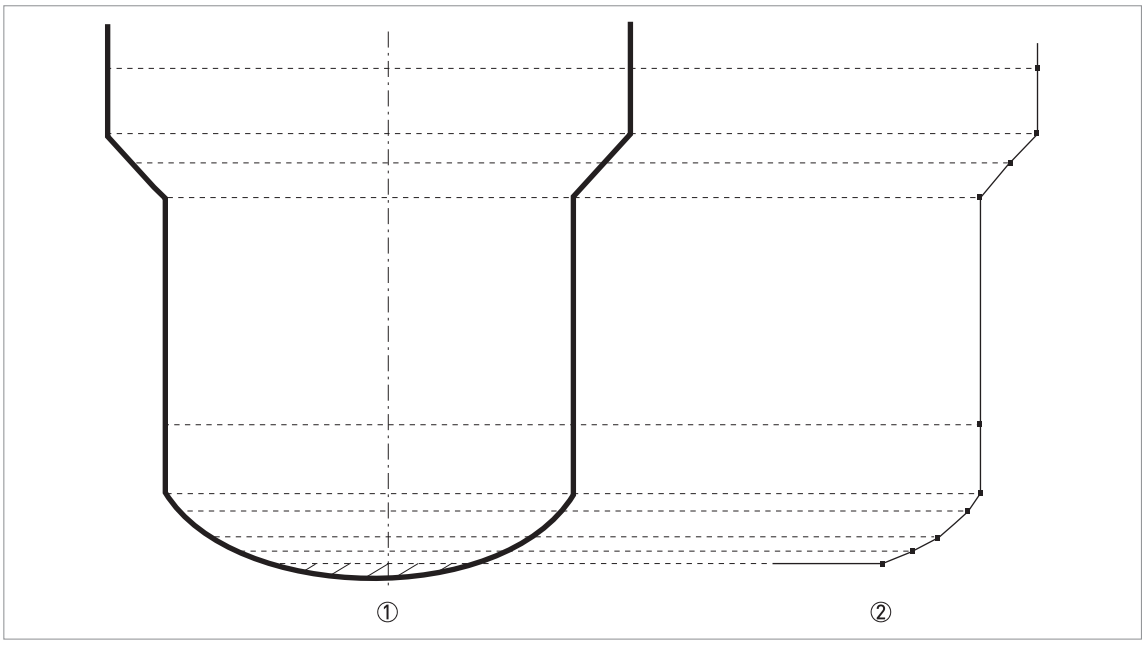

Figure 6-6: A plot of points for a volume or mass table

①
②

How to delete a volume or mass table

- Enter the supervisor menu.
- Push 7 × [▲], [>], and [▲] to go to 2.8.2 DELETE TABLE.
- Push [>] and [▲] to set the parameter to **YES**.
- Push [↵] to go back to the "STORE" screen.
- Push [▲] or [▼] to set the screen to **STORE YES** and push [↵].

➲ The device will delete the data for the strapping table and go back to normal mode. The "CONVERSION" and "ULLAGE CONV." data are not available in normal mode.

6.4.8 How to make a filter to remove radar signal interference

If the device measures level in a tank that contains obstructions (agitator, supports, heating pipes etc.), these objects can cause radar signal interference (parasitic signals). You can use the empty spectrum function (menu item 2.1.2) in the Quick Setup menu to make a filter to remove radar signal interference.

INFORMATION!
We recommend that you do an empty spectrum scan when the tank is empty and all the moving parts (agitators etc.) are in operation..

Place holder

Figure 6-7: How to make a filter to remove radar signal interference

① Empty tank before the device uses the empty spectrum scan (with a graph of reflections shown)
② Partially filled tank before the device uses the empty spectrum scan (with a graph of reflections shown)
③ Partially filled tank after the device uses the empty spectrum scan (with a graph of reflections shown)
④ Agitator blades location
⑤ Tank bottom signal
⑥ Agitator blades signals (interference signals) before the device does the empty spectrum scan
⑦ Bad quality (mixed) signals of the liquid and the agitator blades before the device does the empty spectrum scan
⑧ Reflected signal if the device uses the data from the empty spectrum scan. The device only uses the reflection on the surface of the liquid to measure distance.

INFORMATION!
For more data on empty spectrum scans – table 2: Supervisor (menu item 2.1.2).

6.4.9 How to measure correctly in tanks with curved or conical bottoms

You can offset the tank bottom reference point to find the delayed radar reflection. Obey the instructions that follow:

-
- Increase the tank height in menu C.1.2.
- Go to the **signal screen** in operator mode.

➲ You will see a graph of reflections.

- Push [>] to move the cursor to the reflection with the largest amplitude (given in dB).
- Make a note of the distance of the reflection measured by the device.

➲ The distance to the reflection will be the new tank height.

- Subtract the distance to the reflection from the true tank height.
- Go to **Supervisor > Advanced Setup > Installation Setup > Tank Bottom Offset**.
- Type in the difference you calculated as a negative value.

➲ A negative value will move the reference point above the tank bottom (as given in menu item C.1.2 Tank height).

- Push [↵].

- Push [>] and [▲] (Esc) at the same time to exit to the "save settings" window.
- Select **Save** and push [↵].

➲ The device will go back to operator mode.

INFORMATION!
For more data on menu items, refer to Function description on page 63 – table 2: Supervisor.

6.5 Status and error messages

6.5.1 Device status (markers)

If the device senses a change in device status, the display screen will show 1 or more status markers at the bottom right side of the display screen. The display screen will also show a symbol that agrees with NAMUR Recommendation NE 107 (Self-Monitoring and Diagnosis of Field Devices) and VDI/VDE 2650. This is shown at the top left side of the display screen. More data is given if you use PACTware™ software with the appropriate DTM on a PC. Error codes and data are shown on the device display screen and in the DTM.

Menu item 2.2.2 DIAGNOSTIC (Configuration mode / Supervisor menu) supplies more data. This includes internal voltages, the loop current and the reset counter (watchdog timer). You can see this data on the device display screen and in the DTM.

Place holder

Figure 6-8: Status markers

① Device status (NAMUR NE 107 symbols)
② Symbol: Failure
③ Symbol: Function check
④ Symbol: Out of specification
⑤ Symbol: Maintenance
⑥ Status marker line (marker 3 is shown)
⑦ When the status marker is on, a number is shown

Types of error message

NE 107 status	Type of error	Description
Failure	Error	If an error message is shown in ERROR RECORD (menu item 1.3.1), the current output goes to the error signal value set in menu item RANGE I (menu item 2.4.2) after the time set in ERROR DELAY (menu item 2.4.5). For more data about menu items.
Out of specification	Warning	If a warning message is shown, there is no effect on the current output value.
Maintenance		

If an "Out of specification" or a "Maintenance" status symbol is shown, refer to menu item 2.2.2 DIAGNOSTIC (Configuration mode / Supervisor menu) for more data.

For data on errors, error records and error codes, refer to *Error handling* on page 80.

6.5.2 Error handling

Place holder

Figure 6-9: Error record data

① Error code for the error
② Number of times the error occurred
③ Time since the last error record (2 days, 18 hours, 16 minutes and 43 seconds shown in this example)

How to find an error record

- Push [>] to enter configuration mode from normal mode.
- Push [>], 2 × [▲] and [>] to go to menu item 1.3.1 ERROR RECORD.
- Push 2 × [>] to look at the error list. Push [▲] or [▼] for the selection of an error.

➲ The error record gives the number of times the error occurred and the time since the last error message.

INFORMATION!
The time since the error occurred is measured in Days (D), Hours (H), Minutes(') and Seconds (").
It only includes the time when the device is energized. The error is saved in the memory of the device when it is de-energized. The counter continues when the device is energized again.

Description of errors and corrective actions

Error code	Error Message	Status marker shown	Cause	Corrective action
Failure (NE 107 status signal)				
ERR 100	Device reset	1	The device detected an internal error (watchdog timer issue).	Record the data that is in menu item 2.2.2 DIAGNOSTIC (Configuration mode / Supervisor menu). Speak to the supplier.

Error code	Error Message	Status marker shown	Cause	Corrective action
ERR 101	Current Output Drift	1	The current output is not calibrated.	Speak to the supplier to get the calibration procedure.
		1	Hardware error.	Replace the device.
ERR 102	Temperature out of range	1	The ambient temperature is outside the given range. This can cause loss or corruption of data.	Measure the ambient temperature. De-energize the device until the ambient temperature is back in the given range. If the temperature does not stay in the correct range, make sure that there is insulation around the signal converter. If this error occurs 2 times, replace the device.
ERR 103	Converter memory failure	1	The device's hardware is defective.	Replace the signal converter. For more data, refer to *How to turn or remove the signal converter* on page 36.
ERR 104	Converter Voltage failure	1	The device's hardware is defective.	Replace the signal converter. For more data, refer to *How to turn or remove the signal converter* on page 36.
ERR 200	Internal Communication	1	The device's hardware or software is defective. The converter cannot transmit signals to or receive signals from the antenna electronics.	De-energize the device. Make sure that the signal cable engages in the terminal and the screw connection is tight. Energize the device. If the problem continues, replace the signal converter. For more data, refer to *How to turn or remove the signal converter* on page 36.
ERR 201	Overfill	2	The level is in the blocking distance. There is a risk that the product will overflow and/or cover the antenna.	Use a different procedure to measure the level in the tank. Remove some of the product until the level is below the blocking distance.
				If a viscous product touched the antenna: • remove the device and clean the antenna, or • If the device has a purging option, use the purging system to clean the antenna.
ERR 203	Peak Lost (Level Lost)	2	The signal peak is not found within the measuring window that filters the signals received by the antenna. The measurement is not correct. The device will automatically increase this window to find the correct signal.	Do a check of the device, tank and the process. Reconfigure the device and record a new empty spectrum. Follow the instructions on page 77. If necessary, speak to the supplier.
ERR 204	Sensor no Signal	3	The device's hardware is defective.	Replace the signal converter. For more data, refer to *How to turn or remove the signal converter* on page 36.
ERR 206	Sensor Microwave failure	1	The device's hardware is defective.	Replace the signal converter. For more data, refer to *How to turn or remove the signal converter* on page 36.

Error code	Error Message	Status marker shown	Cause	Corrective action
ERR 207	Sensor Memory failure	1	The device's hardware is defective.	Replace the signal converter. For more data, refer to *How to turn or remove the signal converter* on page 36.
ERR 208	Sensor Voltage failure	3	The device's hardware is defective.	Do a check of the power supply at the device terminals. Make sure that voltage values are in the specified limits in menu item 2.2.2 DIAGNOSTIC (Configuration mode / Supervisor menu). If the voltage is correct, replace the signal converter. For more data on how to replace the signal converter, refer to *How to turn or remove the signal converter* on page 36.
ERR 210	Sensor Not compatible	1	The software version of the sensor is not compatible with the software version of the signal converter.	Go to menu 1.1.0 IDENT. in Configuration mode. Record the version numbers of the device software given in menu items 1.1.2, 1.1.3 and 1.1.4. Give this data to the supplier.
		1	Defective wiring.	

Out of specification (NE 107 status signal)

ERR 102	Temperature Out of Range	1	The ambient temperature is outside the given range. This can cause loss or corruption of data.	Measure the ambient temperature. De-energize the device until the ambient temperature is back in the given range. If the temperature does not stay in the correct range, make sure that there is insulation around the signal converter. If this error occurs 2 times, replace the device.
ERR 201	Overfill	2	The level is in the blocking distance. There is a risk that the product will overflow and/or cover the device.	Remove some of the product until the level is below the blocking distance.
ERR 203	Peak Lost	2	The signal peak is not found within the measuring window that filters the signals received by the antenna. The measurement is not correct. The device will automatically increase this window to find the correct signal.	Do a check of the device, tank and the process and make sure that the data agrees with the device configuration. If necessary, record a new empty spectrum. Follow the instructions on page 77. If necessary, speak to the supplier.

Maintenance (NE 107 status signal)

—	Empty Spectrum Invalid	5	The empty spectrum stored in the device does not agree with the installation. If you change the device configuration (tank height etc.), this message will be shown. The recorded empty spectrum will not be used by the device while this error message is shown. ①	Record a new empty spectrum. Follow the instructions on page 77.

Error code	Error Message	Status marker shown	Cause	Corrective action
—	Signal Weak	4	The signal amplitude is less than the average value. This can occur if the liquid is agitated or if there is foam in the tank. If this error occurs frequently, the device will possibly show the "Peak Lost (Level Lost)" error message. ①	If this error occurs frequently, it is possible that you must install the device in a stilling well or use a different antenna type.
—	Signal Strong	4	This error can occur if there is a large change in signal amplitude. ①	No corrective action is necessary.
—	Bad Measurement Quality	4	The measurement is incorrect and continues to be incorrect after more than 10 s. This error can occur if the tank contents are immediately below the antenna. ①	Record the process with the PACTware™ software tool to find the cause of the problem. If necessary, speak to the supplier.
—	Temperature <-35°C / -31°F	3	The process connection or the ambient temperature is less than -35°C / -31°F. This temperature is near to the minimum limit for device operation. ①	Measure the ambient temperature. De-energize the device until the ambient temperature is back in the given range. If the temperature does not stay in the correct range, make sure that there is insulation around the signal converter.
—	Temperature >+75°C / +167°F	3	The ambient temperature is more than +75°C / +167°F. This temperature is near to the maximum limit for device operation. ①	Measure the ambient temperature. De-energize the device until the ambient temperature is back in the given range. If the temperature does not stay in the correct range, make sure that there is insulation around the signal converter.

① This error message does not have an effect on the current output signal

7.1 Periodic maintenance

INFORMATION!
For more data about regular inspections and maintenance procedures for devices with Ex and other approvals, refer to the related supplementary instructions.

7.2 How to clean the top surface of the device

WARNING!
Do not let more than 5 mm / 0.2" of dust collect on the top surface of the device. This is a possible source of ignition in a potentially explosive atmosphere.

Obey these instructions:

- Keep the thread of the terminal compartment cover clean.
- If dirt collects on the device, clean it.

7.3 How to clean horn antennas under process conditions

If it is possible that there will be build-up, a purging option is available for horn antennas.

CAUTION!
Purge the antenna at intervals to make sure that the inner surface of the antenna stays clean and the device measures accurately.

For more data, refer to the table that follows:

7.4 How to replace device components

7.4.1 Service warranty

WARNING!
Only approved personnel can do an inspection of the device and repairs. If you find a problem, send the device back to the supplier for inspection and/or repairs.

INFORMATION!
The converter housing (compact or remote version) can be detached from the process connection assembly under process conditions. For more data, refer to How to turn or remove the signal converter on page 36.

Servicing by the customer is limited by warranty to:

- The removal and installation of the device.
- **Compact version:** The removal and installation of the signal converter (with the weather protection, if this option is attached). For more data, refer to *How to turn or remove the signal converter* on page 36.
- **Remote (field) version:** The removal and installation of the remote converter and/or the antenna housing. For more data, refer to *How to turn or remove the signal converter* on page 36.

For more data on how to prepare the device before you send it back, refer to *Returning the device to the manufacturer* on page 88.

7.4.2 Replacement of the OPTIWAVE 7300 signal converter with the OPTIWAVE 7400 signal converter

INFORMATION!
Complete the 5 procedures that follow in numerical sequence.
To get the passwords for the OPTIWAVE 7300 and OPTIWAVE 7400 Service menus, speak to the supplier.

Equipment needed:

- 5 mm Allen wrench (not supplied)
- Slotted-tip screwdriver (not supplied)
- Wrench for housing cover
- Yellow / blue magnet
- OPTIWAVE 7300 C radar level meter
- OPTIWAVE 7400 signal converter (without process connection and antenna)
- Handbooks for all devices

CAUTION!
Make sure that you also record device configuration data. This data includes basic configuration (tank height, blocking distance etc.), output, application, display and strapping table data. You can find this data in the Supervisor menu.

Procedure 1: Record the offset value (OPTIWAVE7300 radar level meter)

① Energize the device.
➲ The device is in operation and in normal mode.

② Push [↵] to go to the SERVICE menu.
➲ The display screen shows the text "Code 2".

③ Give the password for the SERVICE menu. If you do not have the password, speak to the supplier.
④ Push [>], [▲] and [>] to go to menu item 4.2.1 Offset. Record the offset value.
⑤ Push 4 × [↵]. Push [▲] or [▼] for the selection of the save option (Store No, Store Yes or Return). Set to "Store No" to cancel the changes to the device settings.
⑥ Push [↵] to confirm.
➲ The device is in normal mode.

⑦ De-energize the device.
⑧ Remove the electrical cables.
⑨ Attach the signal converter cover.

INFORMATION!
If you cannot start the device, record the serial number on the device nameplate and contact the supplier. The supplier will give you the offset value.

Procedure 2: How to remove the signal converter (OPTIWAVE 7300 C radar level meters)

Place holder

Figure 7-1: Procedure 2: How to remove the signal converter (OPTIWAVE 7300 C radar level meters)

① Remove the 4 socket head screws at the bottom of the signal converter with a 5 mm Allen wrench. Keep the screws for the subsequent procedure.
② Remove the signal converter from the process connection. Make sure that the gasket stays on the flange connection.

Procedure 3: How to attach the OPTIWAVE 7400 signal converter

Place holder

Figure 7-2: Procedure 3: How to attach the OPTIWAVE 7400 signal converter

① Put the OPTIWAVE 7400 signal converter on the flange connection. Make sure that the signal converter fully engages in the mating part.
② Tighten the socket set screw at the bottom of the signal converter with a 5 mm Allen wrench.

Procedure 4: How to set the correct offset value (OPTIWAVE 7400)

① Energize the device.
➲ The device is in operation and in normal mode. It will not measure correctly until the new correction offset value is set in menu item 3.1.4 CORR.OFFSET.

② Push [>], 2 × [▲] and [>] to go to the SERVICE menu (3.0.0).
③ Give the password for the SERVICE menu. If you do not have the password, speak to the sup-

plier.

④ Push [>] and 3 × [▲] to go to menu item 3.1.4 CORR.OFFSET (correction offset).

⑤ Push [>] to change the value. Enter the new correction offset value. For the applicable correction offset value, refer to the table that follows.

⑥ Push 4 × [>]. Push [▲] or [▼] for the selection of the save option (STORE NO or STORE YES). Set to "STORE YES" to save and use the data.

⑦ Push [↵] to confirm.

➲ The device is in normal mode. The device uses the new correction offset value.

CAUTION!
You recorded device configuration data of the OPTIWAVE 7300 level meter before you attached the new signal converter. Make sure that you enter this data in the supervisor menu of the OPTIWAVE 7400.

Procedure 5: Device configuration (OPTIWAVE 7400)

① For the Quick Setup procedure, refer to *Quick Setup (Commissioning)* on page 70. For more data about device configuration, refer to *Operation* on page 56.

7.5 Spare parts availability

The manufacturer adheres to the basic principle that functionally adequate spare parts for each device or each important accessory part will be kept available for a period of 3 years after delivery of the last production run for the device.

This regulation only applies to spare parts which are subject to wear and tear under normal operating conditions.

7.6 Availability of services

The manufacturer offers a range of services to support the customer after expiration of the warranty. These include repair, maintenance, technical support and training.

INFORMATION!
For more precise information, please contact your local sales office.

7.7 Returning the device to the manufacturer

7.7.1 General information

This device has been carefully manufactured and tested. If installed and operated in accordance with these operating instructions, it will rarely present any problems.

CAUTION!
Should you nevertheless need to return a device for inspection or repair, please pay strict attention to the following points:

- *Due to statutory regulations on environmental protection and safeguarding the health and safety of the personnel, the manufacturer may only handle, test and repair returned devices that have been in contact with products without risk to personnel and environment.*
- *This means that the manufacturer can only service this device if it is accompanied by the following certificate (see next section) confirming that the device is safe to handle.*

CAUTION!
If the device has been operated with toxic, caustic, flammable or water-endangering products, you are kindly requested:

- *to check and ensure, if necessary by rinsing or neutralising, that all cavities are free from such dangerous substances,*
- *to enclose a certificate with the device confirming that is safe to handle and stating the product used.*

7.7.2 Form (for copying) to accompany a returned device

CAUTION!
To avoid any risk for our service personel, this form has to be accessible from outside of the packaging with the returned device.

Company:		Address:
Department:		Name:
Tel. no.:		Fax no. and/or Email address:
Manufacturer's order no. or serial no.:		
The device has been operated with the following medium:		
This medium is:		radioactive
		water-hazardous
		toxic
		caustic
		flammable
		We checked that all cavities in the device are free from such substances.
		We have flushed out and neutralized all cavities in the device.
We hereby confirm that there is no risk to persons or the environment through any residual media contained in the device when it is returned.		
Date:		Signature:
Stamp:		

7.8 Disposal

CAUTION!
Disposal must be carried out in accordance with legislation applicable in your country.

Separate collection of WEEE (Waste Electrical and Electronic Equipment) in the European Union:

According to the directive 2012/19/EU, the monitoring and control instruments marked with the WEEE symbol and reaching their end-of-life **must not be disposed of with other waste**.
The user must dispose of the WEEE to a designated collection point for the recycling of WEEE or send them back to our local organisation or authorised representative.

8.1 Measuring principle

A radar signal is emitted via an antenna, reflected from the product surface and received after a time t. The radar principle used is FMCW (Frequency Modulated Continuous Wave).

The FMCW-radar transmits a high frequency signal whose frequency increases linearly during the measurement phase (called the frequency sweep). The signal is emitted, reflected on the measuring surface and received with a time delay, t. Delay time, t=2d/c, where d is the distance to the product surface and c is the speed of light in the gas above the product.

For further signal processing the difference Δf is calculated from the actual transmitted frequency and the received frequency. The difference is directly proportional to the distance. A large frequency difference corresponds to a large distance and vice versa. The frequency difference Δf is transformed via a Fourier transformation (FFT) into a frequency spectrum and then the distance is calculated from the spectrum. The level results from the difference between the tank height and the measured distance.

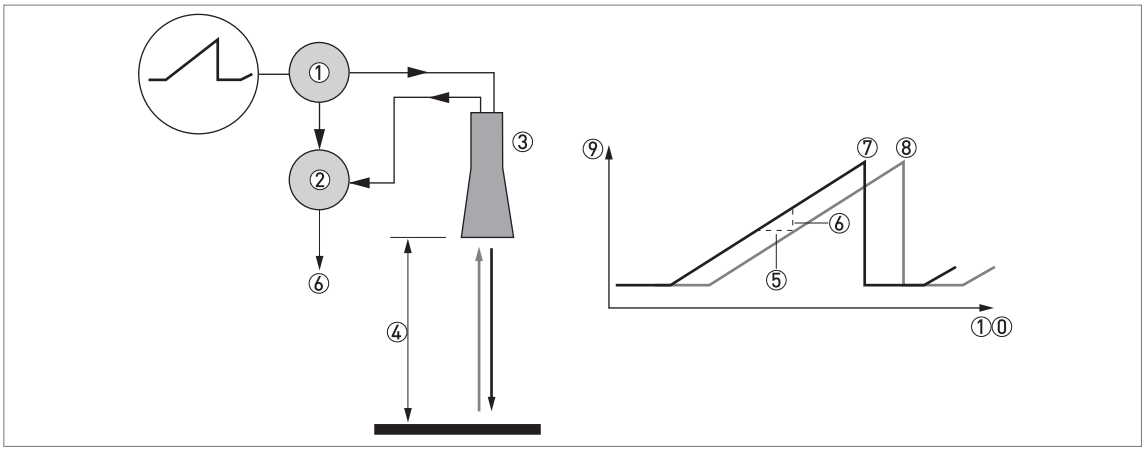

Figure 8-1: Measuring principle of FMCW radar

① Transmitter
② Mixer
③ Antenna
④ Distance to product surface, where change in frequency is proportional to distance
⑤ Differential time delay, Δt
⑥ Differential frequency, Δf
⑦ Frequency transmitted
⑧ Frequency received
⑨ Frequency
①⓪ Time

8.2 Technical data

INFORMATION!

- *The following data is provided for general applications. If you require data that is more relevant to your specific application, please contact us or your local sales office.*
- *Additional information (certificates, special tools, software,...) and complete product documentation can be downloaded free of charge from the website (Downloadcenter).*

Measuring system

Measuring principle	2-wire loop-powered level transmitter; K-band (24...26 GHz) FMCW radar
Application range	Level measurement of liquids, pastes and slurries
Primary measured value	Distance and reflection
Secondary measured value	Level, volume, mass and flow rate

Design

Construction	The measurement system consists of a measuring sensor (antenna) and a signal converter
Options	Integrated LCD display (-20..+60°C / -4…+140°F); if the ambient temperature is not in these limits, the display switches off automatically
	Straight antenna extensions (length 105 mm / 4.1¨) Max. extension length, Drop antenna: 525 mm / 20.7¨; Not available for the Hygienic antenna
	Antenna purging system (supplied with a ¼ NPTF connection)
	PTFE/PP flange plate protection (for Drop antennas without antenna extensions only)
	Distance piece (for process temperature: +150...+200°C / +302...+392°F) ①
	Signal cable for remote housing version (refer to cable properties in "Electrical connection: Remote device version")
	Weather protection
Max. measuring range	80 m / 260 ft
	Also depends on the dielectric constant of the product and the installation type. Refer also to "Antenna selection".
Min. tank height	0.2 m / 8¨ (1 m / 40¨ for hygienic antenna)
Top dead zone	Antenna extension length + antenna length + 0.1 m / 4¨ (500 mm / 20¨ for hygienic antenna)
Beam angle	Metallic Horn (machined) DN 40 (1.5¨): 20°
	Metallic Horn (machined) DN 50 (2¨): 15°
	Metallic Horn (sheet metal) DN 65 (2.5¨): not appicable. This antenna option is for the BM 26 W.
	Metallic Horn (sheet metal) DN 80 (3¨): 10°
	Metallic Horn (sheet metal) DN 100 (4¨): 8°
	Metallic Horn DN150 / 6¨: 6°
	Metallic Horn DN200 / 8¨: 4°
	Drop DN80 / 3¨: 8°
	Drop DN150 / 6¨: 4°
	Hygienic DN50 / 2¨: 15°

Display and user interface	
Display	LCD display
	128 × 64 pixels in 8-step greyscale with 4-button keypad
Interface languages	4 language pack options (the language is given in the customer order): ① English, French German and Italian ② English, French,Spanish and Portuguese ③ English, Chinese (simplified), Japanese and Russian ④ English, Czech, Polish and Turkish

Measuring accuracy

Resolution	1 mm / 0.04¨
Repeatability	±1 mm / ±0.04¨
Accuracy	Standard: ±2 mm / ±0.8¨, when distance < 10 m / 33 ft; ±0.2% of measured distance, when distance > 10 m / 33 ft
Reference conditions acc. to EN 61298-1	
Temperature	+15...+25°C / +59...+77°F
Pressure	1013 mbara ±50 mbar / 14.69 psia ±0.73 psi
Relative air humidity	60% ±15%
Target	Metal plate in an anechoic chamber

Operating conditions

Temperature	
Ambient temperature	-40…+80°C / -40…+176°F Ex: see supplementary operating instructions or approval certificates
Storage temperature	-50…+85°C / -58…+185°F
Process connection temperature (higher temperature on request)	**Metallic Horn (machined) / Metallic Horn (sheet metal) antenna:** Standard: -50…+150°C / -58…+302°F Option: -50…+200°C / -58…+392°F (the process connection temperature must agree with the temperature limits of the gasket material. Refer to "Materials" in this table.) Ex: see supplementary operating instructions or approval certificates
	Drop antenna (PTFE): -50…+150°C / -58…+302°F (the process connection temperature must agree with the temperature limits of the gasket material. Refer to "Materials" in this table.) Ex: see supplementary operating instructions or approval certificates
	Drop antenna (PP): -40…+100°C / -40…+212°F (the process connection temperature must agree with the temperature limits of the gasket material. Refer to "Materials" in this table.) Ex: see supplementary operating instructions or approval certificates
	Drop antenna (PEEK): -20…+200°C / -4…+392°F (the process connection temperature must agree with the temperature limits of the gasket material. Refer to "Materials" in this table.) Ex: see supplementary operating instructions or approval certificates
	Hygienic antenna (PEEK): -20…+150°C / -4…+302°F (the process connection temperature must agree with the temperature limits of the gasket material. Refer to "Materials" in this table.) Ex: see supplementary operating instructions or approval certificates

Pressure	
Process pressure	**Drop antenna (PP):** -1…16 barg / -14.5…232 psig; subject to the process connection used and the flange temperature. For more data, refer to *Guidelines for maximum operating pressure* on page 101.
	Drop antenna (PTFE): -1…40 barg / -14.5…580 psig; subject to the process connection used and the flange temperature. For more data, refer to *Guidelines for maximum operating pressure* on page 101.
	Drop antenna (PEEK): -1...40 barg / -14.5…580 psig; subject to the process connection used and the flange temperature
	Hygienic antenna (PEEK): -1…10 barg / -14.5…145 psig; subject to the process connection used and the flange temperature
	Metallic Horn (machined) / Metallic Horn (sheet metal) antenna: Standard: -1…40 barg / -14.5…580 psig; Option: -1…100 barg / -14.5…1450 psig; subject to process connection used and flange temperature
Other conditions	
Dielectric constant (ε_r)	Direct mode: ≥1.8 TBF mode: ≥1.1 Refer also to "Technical data: Antenna selection".
Ingress protection	IEC 60529: IP 66/67
	NEMA 250: NEMA type 4X (housing) and type 6P (antenna)
Maximum rate of change	10 m/min / 32.8 ft/min

Installation conditions

Process connection size	The nominal diameter (DN) should be equal to or larger than the antenna diameter.
	If the nominal diameter (DN) is smaller than the antenna, either: – provide the means to adapt the device to a larger process connection on the tank (for example, a plate with a slot), or – use the same process connection, but remove the antenna from the device before installation and fit it from inside the tank.
Process connection position	Make sure that there are not any obstructions directly below the process connection for the device. For more data, refer to *Installation* on page 23.
Dimensions and weights	For dimensions and weights data, refer to *Dimensions and weights* on page 103.

Materials

Housing	Standard: Polyester-coated aluminium
	Option: Stainless steel (1.4404 / 316L)
Wetted parts, including antenna	Standard (Metallic Horn antenna): Stainless steel (1.4404 / 316L)
	Option for MetallicHorn antenna: HASTELLOY® C-22® (2.4602) ②
	Standard for Drop antenna: PTFE; PP; PEEK
	Option for Drop antenna: PP, PTFE or PEEK flange plate protection
	Hygienic antenna: PEEK – this material agrees with FDA regulations
Process connection	Standard for Metallic Horn and Drop antennas: Stainless steel (1.4404 / 316L) – a PP, PTFE or PEEK flange plate protection option is also available for the Drop antenna Standard for Hygienic antenna: PEEK
	Option: HASTELLOY® C-22® (2.4602) – for Horn antennas only

Gaskets (and o-rings for the sealed antenna extension option)	**Hygienic antenna:** BioControl®: FKM/FPM (-20…+150°C / -4…+302°F); EPDM (-20°C…+150°C / -4…+302°F) SMS, Tri-Clamp®, VARIVENT®, DIN 11851: without ③
	PTFE Drop antenna: FKM/FPM (-40…+150°C / -40…+302°F); Kalrez® 6375 (-20…+150°C / -4…+302°F); EPDM (-50°C…+150°C / -58…+302°F) ④
	PP Drop antenna: FKM/FPM (-40…+100°C / -40…+212°F); Kalrez® 6375 (-20…+100°C / -4…+212°F); EPDM (-40°C…+100°C / -40…+212°F) ④
	PEEK Drop antenna: FKM/FPM (-40…+200°C / -40…+392°F); Kalrez® 6375 (-20…+200°C / -4…+392°F); EPDM (-40°C…+150°C / -40…+203°F) ④
	Metallic Horn antenna: FKM/FPM (-40…+200°C / -40…+390°F); Kalrez® 6375 (-20…+200°C / -4…+390°F); EPDM (-50°C…+150°C / -58…+300°F)
Feedthrough	Standard: PEI (-50...+200°C / -58...+392°F – max. range. The feedthrough temperature limits must agree with the temperature limits of the gasket material and antenna type. If the distance piece option is not attached, the maximum temperature is 150°C / 300°F.)
	Option: Metaglas® (-30...+200°C / -22...+392°F – max. range. The feedthrough temperature limits must agree with the temperature limits of the gasket material and antenna type. If the distance piece option is not attached, the maximum temperature is 150°C / 300°F.)
Cable gland	Standard: none
	Options: Plastic (Non-Ex: black, Ex i-approved: blue); nickel-plated brass; stainless steel
Weather protection (Option)	Stainless steel (1.4404 / 316L)

Process connections

Thread	G 1½ (ISO 228); 1½ NPT (ASME B1.20.1)
Flange version	
EN 1092-1	DN40…200 in PN16 or PN40 (Type B1), DN40…150 in PN63 or PN100 (Type B1); others on request Optional flange facing: Types C, D, E and F
ASME B16.5	1½"…8" in 150 lb RF, 1½"...6" in 300 lb RF, 1½"...4" in 600 lb or 900 lb RF; 1½"...2" in 1500 lb RJ; others on request Optional flange facing: RJ (Ring Joint)
JIS B2220	40…100A in 10K; others on request
Hygienic	BioControl® DN50; Tri-Clamp® 2"; DIN 11851 DN50; SMS 51; VARIVENT® DN50; others on request
Other	Others on request

Electrical connections

Power supply	**Terminals output – Non-Ex / Ex i:** 14…30 VDC; min./max. value for an output of 22 mA at the terminals
	Terminals output – Ex d: 20…36 VDC; min./max. value for an output of 22 mA at the terminals
Maximum current	22 mA
Current output load	**Non-Ex / Ex i:** R_L [Ω] ≤ ((U_{ext} -12 V)/22 mA). For more data, refer to *Minimum power supply voltage* on page 99.
	Ex d: R_L [Ω] ≤ ((U_{ext} -16 V)/22 mA). For more data, refer to *Minimum power supply voltage* on page 99.
Cable entry	Standard: M20×1.5; Option: ½ NPT

Cable gland	Standard: none
	Options: M20×1.5 (cable diameter: 7…12 mm / 0.28…0.47¨); others are available on request
Cable entry capacity (terminal)	0.5…2.5 mm²

Input and output

Current output / HART®	
Output signal	4…20 mA HART® or 3.8…20.5 mA acc. to NAMUR NE 43 ⑤
Resolution	±3 µA
Temperature drift	Typically 50 ppm/K
Digital temperature drift	Max. ±15 mm / 0.6¨ for the full temperature range
Error signal	High: 22 mA; Low: 3.6 mA acc. to NAMUR NE 43 ⑥
PROFIBUS PA	
Type	PROFIBUS MBP interface that agrees with IEC 61158-2 with 31.25 kbit/s; voltage mode (MBP = Manchester Coded, Bus Powered)
Function blocks	1 × Physical Block, 1 × Level Transducer Block, 4 × Analog Input Function Blocks
Device power supply	9...32 VDC – bus powered; no additional power supply required
Polarity sensitivity	No
Basic current	15 mA
FOUNDATION™ fieldbus	
Physical layer	FOUNDATION™ fieldbus protocol that agrees with IEC 61158-2 and FISCO model
Communication standard	H1
ITK version	6.1
Function blocks	1 × Resource Block (RB), 3 × Transducer Blocks (TB), 3 × Analog Input Blocks (AI), 1 x Proportional Integral Derivative Block (PID)
	Analog Input Block: 30 ms
	Proportional Integral Derivative Block: 40 ms
Device power supply	Not intrinsically safe: 9...32 VDC
	Intrinsically safe: 9...24 VDC
Basic current	14 mA
Maximum error current	20.5 mA (= basic current + error current = 14 mA + 6.5 mA)
Polarity sensitivity	No
Minimum cycle time	250 ms
Output data	Level, distance, ullage conversion, level conversion
Input data	None
Error current FDE	Typically 0 mA (FDE =Fault Disconnection Electronic)
Link Master function	Supported

Approvals and certification

CE	This device fulfils the statutory requirements of the EC directives. The manufacturer certifies successful testing of the product by applying the CE mark.
Vibration resistance	IEC 60068-2-6 and EN 50178 (10...57 Hz: 0.075 mm / 57...150 Hz:1g)

Explosion protection	
ATEX (Ex ia or Ex d) DEKRA xxATEXxxxx X (pending)	**Compact version**
	II 1/2 G, 2 G Ex ia IIC T6...T2 Ga/Gb or Ex ia IIC T6...T2 Gb;
	II 1/2 D, 2 D Ex ia IIIC T90°C Da/Db or Ex ia IIIC T90°C Db IP6X;
	II 1/2 G, 2 G Ex d ia IIC T6...T2 Ga/Gb or Ex d ia IIC T6...T2 Gb;
	II 1/2 D, 2 D Ex ia tb IIIC T90°C Da/Db or Ex ia tb IIIC T90°C Db IP6X
	Remote version, transmitter
	II 2 G Ex ia [ia Ga] IIC T6...T4 Gb;
	II 2 D Ex ia [ia Da] IIIC T90°C Db;
	II 2 G Ex d ia [ia Ga] IIC T6...T4 Gb;
	II 2 D Ex ia tb [ia Da] IIIC T90°C Db
	Remote version, sensor
	II 1/2 G Ex ia IIC T6...T2 Ga/Gb
	II 1/2 D Ex ia IIIC T90°C Da/Db
	II 1/2 G Ex ia IIC T6...T2 Gb
	II 1/2 D Ex ia IIIC T90°C Db
ATEX (Ex ic) DEKRA xxATEXxxxx X (pending)	**Compact version**
	II 3 G Ex ic IIC T6...T2 Gc;
	II 3 D Ex ic IIIC T90°C Dc
	Remote version, transmitter
	II 3 G Ex ic [ic] IIC T6...T4 Gc;
	II 3 D Ex ic [ic] IIIC T90°C Dc
	Remote version, sensor
	II 3 G Ex ic IIC T6...T2 Gc;
	II 3 D Ex ic IIIC T90°C Dc
IECEx IECEx DEK xx.xxxx X (pending)	**Compact version**
	Ex ia IIC T6…T2 Ga/Gb or Ex ia IIC T6…T2 Gb or Ex ic IIC T6…T2 Gc;
	Ex ia IIIC T90°C Da/Db or Ex ia IIIC T90°C Db or Ex ic IIIC T90°C Dc;
	Ex d ia IIC T6...T2 or Ex d ia IIIC T6...T2 Gb;
	Ex ia tb IIIC T90°C Da/Db or Ex ia tb IIIC T90°C Db
	Remote version, transmitter
	Ex ia [ia Ga] IIC T6…T4 Gb or Ex ic IIC T6…T4 Gc;
	Ex ia [ia Da] IIIC T90°C Db or Ex ic [ic] IIIC T90°C Dc;
	Ex d ia [ia Ga] IIC T6...T4 Gb;
	Ex ia tb [ia Da] IIIC T90°C Db
	Remote version, sensor
	Ex ia IIC T6…T2 Ga/Gb or Ex ia IIC T6…T2 Gb or Ex ic IIC T6…T2 Gc;
	Ex ia IIIC T90°C Da/Db or Ex ia IIIC T90°C Db or Ex ic IIIC T90°C Dc

cFMus - Dual Seal-approved (pending)	**NEC 500 (Division ratings)**
	XP-AIS / Cl. I / Div. 1 / Gr. ABCD / T6-T1;
	DIP / Cl. II, III / Div. 1 / Gr. EFG / T6-T1;
	IS / Cl. I, II, III / Div. 1 / Gr. ABCDEFG / T6-T1;
	NI / Cl. I / Div. 2 / Gr. ABCD / T6-T1
	NEC 505 (Zone ratings)
	Cl. I / Zone 0 / AEx d [ia] / IIC / T6-T1;
	Cl. I / Zone 0 / AEx ia / IIC / T6-T1;
	Cl. I / Zone 2 / AEx nA / IIC / T6-T1;
	Zone 20 / AEx ia / IIIC / T90°C
	Zone 20 / AEx tb [ia] / IIIC / T90°C
	Hazardous (Classified) Locations, indoor/outdoor Type 4X and 6P, IP66, Dual Seal
	CEC Section 18 (Zone ratings)
	Cl. I, Zone 0, Ex d [ia], IIC, T6-T1;
	Cl. I, Zone 0, Ex ia, IIC, T6-T1;
	Cl. I, Zone 2, Ex nA, IIC, T6-T1
	CEC Section 18 and Annex J (Division ratings)
	XP-AIS / Cl. I / Div. 1 / Gr. BCD / T6-T1
	DIP / Cl. II, III / Div. 1 / Gr. EFG / T6-T1
	IS / Cl. I / Div. 1 / Gr. BCD / T6-T1
	NI / Cl. I / Div. 2 / Gr. ABCD / T6-T1
NEPSI GYJxxxxxx/xx (pending)	Ex ia IIC T2~T6 Gb or Ex ia IIC T2~T6 Ga/Gb DIP A20/A21 T_A T90°C IP6X
	Ex d ia IIC T2~T6 Gb or Ex d ia IIC T2~T6 Ga/Gb DIP A20/A21 T_A T90°C IP6X
DNV / INMETRO DNV 14.00xx X (pending)	Ex ia IIC T6…T3 Ga; Ex ia IIIC T70°C...T95°C Da IP6X;
	Ex d [ia Ga] IIC T6...T3 Ga/Gb; Ex tb [ia Da] IIIC T70°C...T95°C Db IP6X
Other standards and approvals	
SIL - only for 4...20 mA HART output	Compact version and 4...20 mA HART output only: SIL 2 for high/low demand mode operation
EMC	Electromagnetic Compatibility Directive SIL 2-approved devices
Radio approvals	**R & TTE** Radio Equipment and Telecommunications Terminal Equipment Directive
	FCC Rules Part 15
	Industry Canada RSS-211
LVD	Agrees with the safety part of the Low-Voltage Directive
NAMUR	NAMUR NE 21 Electromagnetic Compatibility (EMC) of Industrial Process and Laboratory Control Equipment
	NAMUR NE 43 Standardization of the Signal Level for the Failure Information of Digital Transmitters
	NAMUR NE 53 Software and Hardware of Field Devices and Signal Processing Devices with Digital Electronics
	NAMUR NE 107 Self-Monitoring and Diagnosis of Field Devices

CRN	This certification is applicable for all Canadian provinces and territories. For more data, refer to the website.
Construction code	Option: NACE MR 0175 / MR 0103 / ISO 15156

① The device has a distance piece if it has the flange options that follow: DN100 PN100, DN150 PN63 or PN100, DN200 PN40, 6¨ in 300 lb, 3¨...4¨ in 600 lb, 3¨...4¨ in 900 lb, and 1½¨...2¨ in 900 lb or 1500 lb
② HASTELLOY® is a registered trademark of Haynes International, Inc.
③ Tri-Clamp® is a registered trademark of Ladish Co., Inc. BioControl® is a registered trademark of Neumo-Ehrenberg-Group. VARIVENT® is a registered trademark of GEA Tuchenhagen GmbH.
④ Kalrez® is a registered trademark of DuPont Performance Elastomers L.L.C.
⑤ HART® is a registered trademark of the HART Communication Foundation
⑥ Only the 3.6 mA error signal is applicable to SIL-approved devices

8.3 Minimum power supply voltage

Use these graphs to find the minimum power supply voltage for a given current output load.

Non-Ex and Hazardous Location approved (Ex i / IS) devices

Place holder

Figure 8-2: Minimum power supply voltage for an output of 22 mA at the terminal (Non-Ex and Hazardous Location approval (Ex i / IS))

X: Power supply U [VDC]
Y: Current output load R_L [Ω]

Hazardous Location (Ex d / XP/NI) approved devices

Place holder

Figure 8-3: Minimum power supply voltage for an output of 22 mA at the terminal (Hazardous Location approval (Ex d / XP/NI))

X: Power supply U [VDC]
Y: Current output load R_L [Ω]

8.4 Antenna selection

The graphs below show which antenna to select for the application based on:

- D, the measuring range,
- ε_r, is the dielectric constant of the product being measured

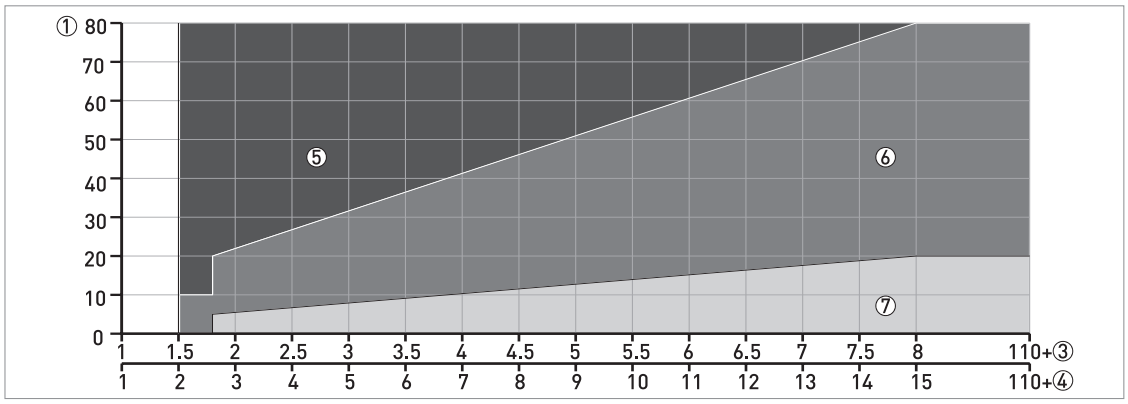

Figure 8-4: Selection of antenna for liquid applications (graph of distance in m against ε_r)

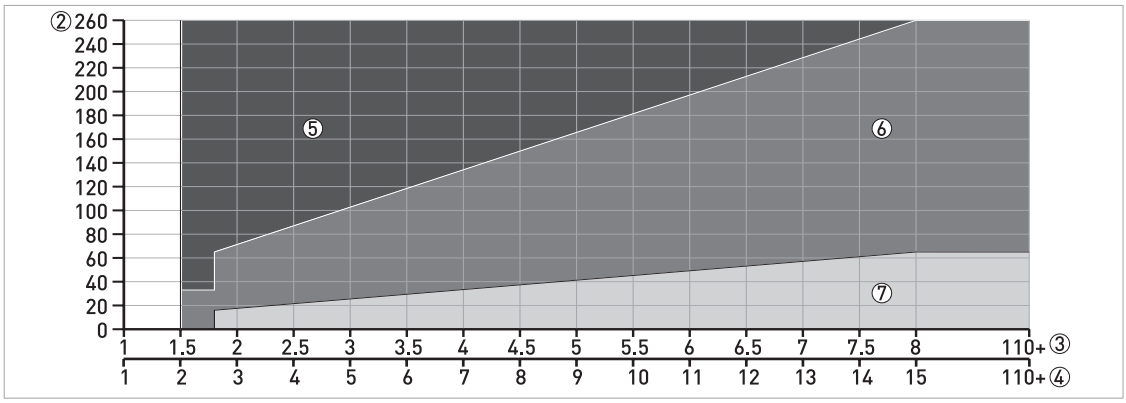

Figure 8-5: Selection of antenna for liquid applications (graph of distance in ft against ε_r)

① Distance, D [m]
② Distance, D [ft]
③ Dielectric constant (ε_r) range for storage/still well applications
④ Dielectric constant (ε_r) range for process/agitator applications
⑤ DN80, DN100, DN150 or DN200 Horn antenna with a still well, or DN150 or DN200 Horn antenna without a still well
⑥ DN80, DN100, DN150 or DN200 Horn antenna with or without a still well, or DN80 or DN150 Drop antenna without a still well
⑦ DN40, DN50, DN80, DN100, DN150 or DN200 Horn antenna with or without a still well, DN80 or DN150 Drop antenna without a still well or Hygienic antenna

8.5 Guidelines for maximum operating pressure

WARNING!
Make sure that the devices are used within their operating limits.

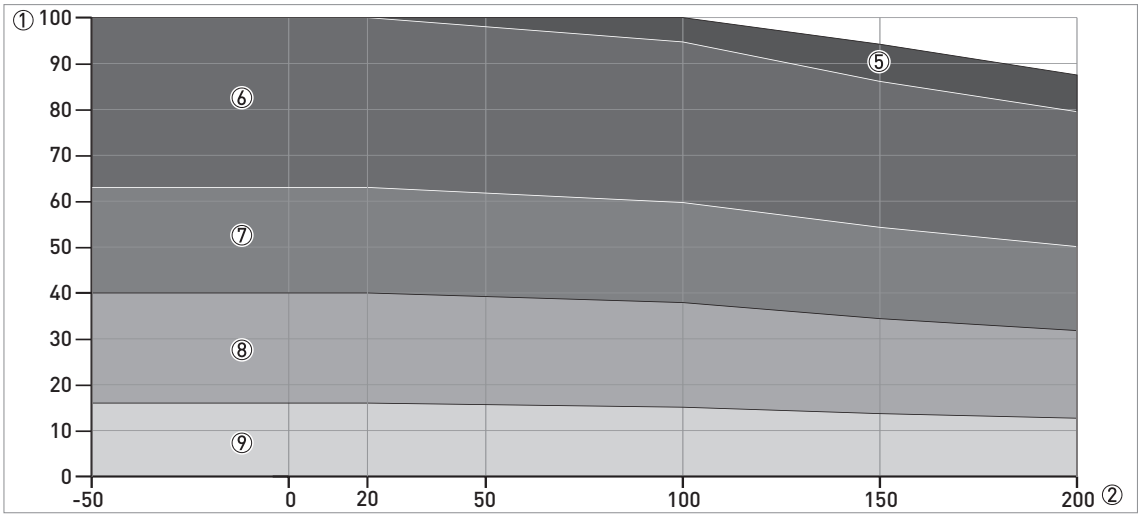

Figure 8-6: Pressure / temperature de-rating (EN 1092-1), flange and threaded connection, in °C and barg

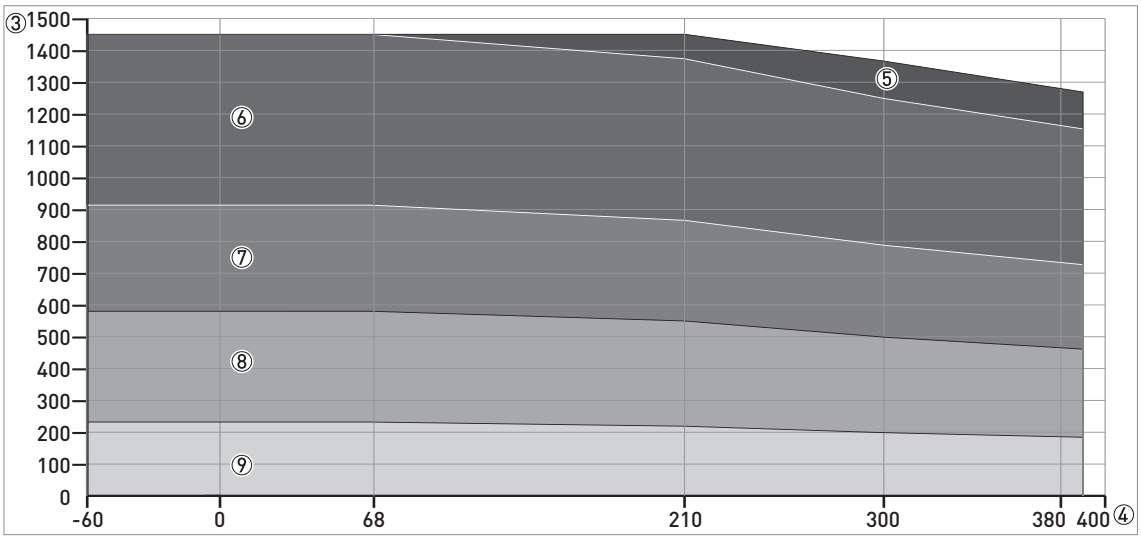

Figure 8-7: Pressure / temperature de-rating (EN 1092-1), flange and threaded connections, in °F and psig

INFORMATION!
CRN certification
There is a CRN certification option for devices with process connections that agree with ASME standards. This certification is necessary for all devices that are installed on a pressure vessel and used in Canada.

8.6 Dimensions and weights

DN40/1.5¨ Metallic Horn (machined) antenna versions

Place holder

Figure 8-8: DN40 or 1.5¨ horn antenna versions

① DN40/1.5¨ horn antenna with G 1½ or 1½ NPT thread connection
② DN40/1.5¨ horn antenna with flange connection

INFORMATION!

- *Cable glands are delivered on demand with non-Ex, Ex i- and Ex d-approved devices.*
- *The diameter of the outer sheath of the cable must be 7…12 mm or 0.28…0.47¨.*
- *Cable glands for cFMus-approved devices must be supplied by the customer.*
- *A weather protection cover is available as an accessory with all devices.*

Dimensions and weights in mm and kg

	Dimensions [mm]								Weights [kg]
	a	b	c	d	e	f	h	Øi	
Thread connection	??? ①	???	???	???	???	32	126 ②	39	???
Flange connection	??? ①	???	???	??? ③	??? ③	45 ③	96 ②	39	??...??

① If fitted with standard cable glands
② Additional antenna extensions of Ø39 × length 105 mm are available
③ With ¼ NPTF purge connection option: add 17 mm to this dimension. With distance piece option: add 71 mm to this dimension.

Dimensions and weights in inches and lb

	Dimensions [inches]								Weights [lb]
	a	b	c	d	e	f	h	Øi	
Thread connection	??? ①	???	???	???	???	1.3	4.9 ②	1.5	???
Flange connection	??? ①	???	???	??? ③	??? ③	1.8 ③	3.8 ②	1.5	??...??

① If fitted with standard cable glands
② Additional antenna extensions of Ø1.5 × length 4.1¨ are available
③ With ¼ NPTF purge connection option: add 0.7¨ to this dimension. With distance piece option: add 2.8¨ to this dimension.

DN50/2¨ Metallic Horn (machined) horn antenna versions

Place holder

Figure 8-9: DN50/2¨ horn antenna versions

① DN50/2¨ horn antenna with G 1½ or 1½ NPT thread connection
② DN50/2¨ horn antenna with flange connection

INFORMATION!

- *Cable glands are delivered on demand with non-Ex, Ex i- and Ex d-approved devices.*
- *The diameter of the outer sheath of the cable must be 7…12 mm or 0.28…0.47¨.*
- *Cable glands for cFMus-approved devices must be supplied by the customer.*
- *A weather protection cover is available as an accessory with all devices.*

Dimensions and weights in mm and kg

	Dimensions [mm]								Weight [kg]
	a	b	c	d	e	f	h	Øi	
Thread connection	??? ①	???	???	???	???	32	136 ②	43	???
Flange connection	??? ①	???	???	??? ③	??? ③	45 ③	107 ②	43	??...??

① If fitted with standard cable glands
② Additional antenna extensions of Ø39 × length 105 mm are available
③ With ¼ NPTF purge connection option: add 17 mm to this dimension. With distance piece option: add 71 mm to this dimension.

Dimensions and weights in inches and lb

	Dimensions [inches]								Weights [lb]
	a	b	c	d	e	f	h	Øi	
Thread connection	??? ①	???	???	???	???	1.3	5.3 ②	1.7	???
Flange connection	??? ①	???	???	??? ③	??? ③	1.8 ③	4.2 ②	1.7	??...??

① If fitted with standard cable glands
② Additional antenna extensions of Ø1.5 × length 4.1¨ are available
③ With ¼ NPTF purge connection option: add 0.7¨ to this dimension. With distance piece option: add 2.8¨ to this dimension.

Metallic Horn (sheet metal) antenna versions

Place holder

Figure 8-10: DN65/2.5", DN80/3", DN100/4", DN150/6" and DN200/8" Metallic Horn (sheet metal) antenna versions

① Metallic Horn antenna (DN65/2.5", DN80/3", DN100/4", DN150/6" or DN200/8") with G 1½ or 1½ NPT thread connection
② Sheet metal horn antenna (DN65/2.5", DN80/3", DN100/4", DN150/6" or DN200/8") with flange connection
③ Antenna purging system option (supplied with ¼ NPTF connection)

INFORMATION!

- *Cable glands are delivered on demand with non-Ex, Ex i- and Ex d-approved devices.*
- *The diameter of the outer sheath of the cable must be 7…12 mm or 0.28…0.47".*
- *Cable glands for cFMus-approved devices must be supplied by the customer.*
- *A weather protection cover is available as an accessory with all devices.*

Dimensions and weights in mm and kg

		Dimensions [mm]								Weights [kg]
		a	b	c	d	e	f	h	Øi	
Thread connection	DN65/2.5 ¨	??? ①	???	???	???	???	???	??? ②	??	
	DN80/3¨	??? ①	???	???	???	???	33	249 ②	75	??
	DN100/4¨	??? ①	???	???	???	???	33	318 ②	95	??
	DN150/6¨	??? ①	???	???	???	???	33	486 ②	144	??
	DN200/8¨	??? ①	???	???	???	???	33	644 ②	190	??
Flange connection	DN65/2.5 ¨	??? ①	???	???	??? ③	??? ③	45 ③	??? ②	??	??
	DN80/3¨	??? ①	???	201	??? ③	??? ③	45 ③	221 ②	75	??
	DN100/4¨	??? ①	???	201	??? ③	??? ③	45 ③	290 ②	95	??
	DN150/6¨	??? ①	???	201	??? ③	??? ③	45 ③	458 ②	144	??
	DN200/8¨	??? ①	???	???	??? ③	??? ③	45 ③	616 ②	190	??

① If fitted with standard cable glands
② Additional antenna extensions of Ø39 × length 105 mm are available
③ With ¼ NPTF purge connection option: add 17 mm to this dimension. With distance piece option: add 71 mm to this dimension.

Dimensions and weights in inches and lb

		Dimensions [inches]								Weights [lb]
		a	b	c	d	e	f	h	Øi	
Thread connection	DN65/2.5 ¨	??? ①	???	???	???	???	???	??? ②	???	???
	DN80/3¨	??? ①	???	???	???	???	1.3	9.8 ②	3.0	???
	DN100/4¨	??? ①	???	???	???	???	1.3	12.5 ②	3.7	???
	DN150/6¨	??? ①	???	???	???	???	1.3	19.1 ②	5.7	???
	DN200/8¨	??? ①	???	???	???	???	1.3	25.4 ②	7.5	???
Flange connection	DN65/2.5 ¨	??? ①	???	???	??? ③	??? ③	1.8 ③	??? ②	???	???
	DN80/3¨	??? ①	???	???	??? ③	??? ③	1.8 ③	8.7 ②	3.0	???
	DN100/4¨	??? ①	???	???	??? ③	??? ③	1.8 ③	11.4 ②	3.7	???
	DN150/6¨	??? ①	???	???	??? ③	??? ③	1.8 ③	18.0 ②	5.7	???
	DN200/8¨	??? ①	???	???	??? ③	??? ③	1.8 ③	24.3 ②	7.5	???

① If fitted with standard cable glands
② Additional antenna extensions of Ø1.5 × length 4.1¨ are available
③ With ¼ NPTF purge connection option: add 0.7¨ to this dimension. With distance piece option: add 2.8¨ to this dimension.

DN80/3¨ Drop antenna versions

Place holder

Figure 8-11: DN80/3¨ Drop antenna versions

① DN80/3¨ Drop antenna with G 1½ or 1½ NPT thread connection
② DN80/3¨ Drop antenna with flange connection
③ DN80/3¨ Drop antenna with PP, PTFE or PEEK flange plate protection option

INFORMATION!

- *Cable glands are delivered on demand with non-Ex, Ex i- and Ex d-approved devices.*
- *The diameter of the outer sheath of the cable must be 7…12 mm or 0.28…0.47¨.*
- *Cable glands for cFMus-approved devices must be supplied by the customer.*
- *A weather protection cover is available as an accessory with all devices.*

Dimensions and weights in mm and kg

	Dimensions [mm]									Weights [kg]
	a	b	c	d	e	f	h	Øi	j	
Thread connection	??? ①	???	???	???	???	33	165 ②	74	–	??...??
Flange connection	??? ①	???	???	???	???	45	137 ②	74	–	??...??
Flange connection with flange plate protection option	??? ①	???	???	???	???	45	137	74	39	??...??

① If fitted with standard cable glands

② Additional antenna extensions of Ø39 × length 105 mm are available. Do not attach more than 5 antenna extensions.

Dimensions and weights in inches and lb

	Dimensions [inches]									Weights [lb]
	a	b	c	d	e	f	h	Øi	j	
Thread connection	??? ①	???	???	???	???	1.3	6.5 ②	2.9	–	??...??
Flange connection	??? ①	???	???	???	???	1.8	5.4 ②	2.9	–	??...??
Flange connection with flange plate protection option	??? ①	???	???	???	???	1.8	5.4	2.9	1.5	??...??

① If fitted with standard cable glands

② Additional antenna extensions of Ø1.5 × length 4.1¨ available. Do not attach more than 5 antenna extensions.

DN150/6¨ Drop antenna versions (PP or PEEK material options only)

Place holder

Figure 8-12: DN150/6¨ Drop antenna versions (PP or PEEK materials option only)

① DN150/6¨ Drop antenna with flange connection
② DN150/6¨ Drop antenna with thread connection
③ DN150/6¨ Drop antenna, with flange plate protection option

INFORMATION!

- *Cable glands are delivered on demand with non-Ex, Ex i- and Ex d-approved devices.*
- *The diameter of the outer sheath of the cable must be 7…12 mm or 0.28…0.47¨.*
- *Cable glands for cFMus-approved devices must be supplied by the customer.*
- *A weather protection cover is available as an accessory with all devices.*

Dimensions and weights in mm and kg

	Dimensions [mm]										Weights [kg]
	a	b	c	d	e	f	h	Øi	j	k	
Thread connection	?? ①	??	??	??	??	33	242 ②	144	–	–	??
Flange connection	?? ①	??	??	??	??	45	214 ②	144	–	–	??...??
Flange connection with flange plate protection option	?? ①	??	??	??	??	45	214	144	39	–	–

① If fitted with standard cable glands

② Additional antenna extensions of Ø39 × length 105 mm are available. Do not attach more than 5 antenna extensions.

Dimensions and weights in inches and lb

	Dimensions [inches]										Weights [lb]
	a	b	c	d	e	f	h	Øi	j	k	
Thread connection	?? ①	??	??	??	??	1.3	9.5 ②	5.7	–	–	??
Flange connection	?? ①	??	??	??	??	1.8	8.4 ②	5.7	–	–	??...??
Flange connection with flange plate protection option	?? ①	??	??	??	??	1.8	8.4	5.7	1.5	–	–

① If fitted with standard cable glands

② Additional antenna extensions of Ø1.5 × length 4.1¨ are available. Do not attach more than 5 antenna extensions.

Dimensions and weights in mm and kg

	Dimensions [mm]				Weights [kg]
	a	b	d	h	
DIN 11851 connection	??? ①	???	???	8	???
Tri-Clamp® connection	??? ①	???	???	8	???
Neumo BioControl® connection	??? ①	???	???	25	???
SMS connection	??? ①	???	???	8	???
VARIVENT® connection	??? ①	???	???	25	???

① If fitted with standard cable glands

Dimensions and weights in inches and lb

	Dimensions [inches]				Weights [lb]
	a	b	d	h	
DIN 11851 connection	??? ①	??? ①	??? ①	0.3	??? ①
Tri-Clamp® connection	??? ①	??? ①	??? ①	0.3	??? ①
Neumo BioControl® connection	??? ①	??? ①	??? ①	1.0	??? ①
SMS connection	??? ①	??? ①	??? ①	0.3	??? ①
VARIVENT® connection	??? ①	??? ①	??? ①	1.0	??? ①

① If fitted with standard cable glands

Type of housing	Weights			
	Aluminium housing		Stainless steel housing	
	[kg]	[lb]	[kg]	[lb]
Compact	??	??	??	??
Remote converter ①	??	??	??	??
Antenna housing ②	??	??	??	??

① The remote version of the device has a "remote converter" and a "probe housing". For more data, refer to "Housing dimensions" at the start of this section.

② The remote version of the device has a "remote converter" and a "antenna housing". For more data, refer to "Housing dimensions" at the start of this section.

Type of housing	Weights			
	Aluminium housing		Stainless steel housing	
	[kg]	[lb]	[kg]	[lb]
Compact	??	??	??	??

Antenna option weights

Antenna options	Min./Max. weights	
	[kg]	[lb]
Standard options, without converter		
DN40 / 1.5¨ Metallic Horn antenna with flange connection, standard length	??...??	??...??
DN50 / 2¨ Metallic Horn antenna with flange connection, standard length	??...??	??...??
DN65 / 2.5¨ Metallic Horn antenna with flange connection, standard length	??...??	??...??
DN100 / 4¨ Metallic Horn antenna with flange connection, standard length	5.6...37.1	12.3...81.8
DN100 / 4¨ Metallic Horn antenna with flange connection, standard length	9.1...37.2	20.1...82
DN150 / 6¨ Metallic Horn antenna with flange connection, standard length	13.6...37.5	30...82.7
DN200 / 8¨ Metallic Horn antenna with flange connection, standard length	14.0..37.8	30.9...83.3
DN80 Drop antenna with thread connection, standard length	??...??	??...??
DN150 Drop antenna with thread connection, standard length	??...??	??...??
Antenna extension options		
Straight extension, length 105 mm ①	+??	+??
Straight extension, length 210 mm ①	+??	+??
Straight extension, length 315 mm ①	+??	+??
Straight extension, length 420 mm ①	+??	+??
Straight extension, length 525 mm ①	+??	+??
Straight extension, length 630 mm ②	+??	+??
Straight extension, length 735 mm ②	+??	+??
Straight extension, length 840 mm ②	+??	+??
Straight extension, length 945 mm ②	+??	+??
Straight extension, length 1050 mm ②	+??	+??
"L" (right-angle) extension ②	+??	+??
Other options		
HT extension ③	+??	+??
Flange plate option	+??	+??

① This option is for Metallic Horn and Drop antenna options
② This option is for Metallic Horn antenna options
③ This component is only for the Metallic Horn and Wave Guide antennas. It is attached between the signal converter and the flange if the process connection temperature is +150...+250°C / +302...+482°F.

Antenna options	Min./Max. weights	
	[kg]	[lb]
Standard options, without converter		
DN50 / 2¨ Hygienic antenna with clamp connection	??...??	??...??
DN50 / 2¨ Hygienic antenna with thread connection	??...??	??...??

9.1 General description

The HART® Protocol is an open digital communication protocol for industry. It is free to use by anyone. It is included in the software embedded in signal converters of HART-compatible devices.

There are 2 classes of devices which support the HART® Protocol: operating devices and field devices. There are 2 classes of operating devices (Master): PC-supported workstations (Primary Master) and manual control units (Secondary Master). These can be used in control centres and other locations. HART® field devices include sensors, converters and actuators. Field devices include 2-wire and 4-wire devices, and also intrinsically-safe versions for use in hazardous areas.

There are 2 primary operation modes for HART-compatible devices: point-to-point mode and multi-drop mode.

If the device is used in point-to-point mode, the HART® Protocol uses the Bell 202 Frequency Shift Keying (FSK) standard to put a digital signal on top of the 4...20 mA signal. The connected device sends and receives digital signals that agree with the HART® Protocol, and sends analog signals at the same time. Only 1 device can be connected to the signal cable.

If the device is used in multi-drop mode, the network only uses a digital signal that agrees with the HART® Protocol. The loop current is set to 4 mA. You can connect a maximum of 15 devices to the signal cable.

An FSK or HART® modem is included in field devices and manual control units. It is necessary to have an external modem for PC-supported workstations. The external modem is connected to the serial interface.

9.2 Software history

INFORMATION!
In the table below, "x" is a placeholder for possible multi-digit alphanumeric combinations, depending on the available version.

Release date	Devices	HART®	
		Device Revision	DD Revision
2008-03	All revisions	1	2

HART® identification codes and revision numbers

Manufacturer ID:	0x45
Device:	0xE5
Device Revision:	1
DD Revision	2
HART® Universal Revision:	7
FC 375/475 system SW.Rev.:	≥ 1.8
AMS version:	≥ 7.0
PDM version:	–
FDT version:	≥ 1.2

9.3 Connection variants

The signal converter is a 2-wire device with 4...20 mA current output and HART® interface.

- **Multi-Drop Mode is supported**
  In a Multi-Drop communication system, more than 1 device is connected to a common transmission cable.
- **Burst Mode is not supported**

There are two ways of using the HART® communication:

- as Point-to-Point connection and
- as Multi-Drop connection with 2-wire connection.

9.3.1 Point-to-Point connection - analogue / digital mode

Point-to-Point connection between the signal converter and the HART® Master.

The current output of the device is passive.

Also.

9.3.2 Multi-Drop connection (2-wire connection)

For an illustration of multi-drop networks.

9.4 HART® device variables

The HART® dynamic variables PV (Primary Variable), SV (Secondary Variable), TV (Third Variable) and QV (Fourth Variable) can be assigned to any of the device variables.

The HART® dynamic variable PV is always connected to the HART® current output which is, for example, assigned to level measurement.

9.5 Field Communicator 475 (FC 475)

The Field Communicator is a hand terminal from Emerson Process Management that is designed to configure HART® and Foundation Fieldbus devices. Device Descriptions (DDs) are used to integrate different devices into the Field Communicator.

9.5.1 Installation

CAUTION!
The Field Communicator cannot be used to correctly configure, operate or read data from the device unless the Device Description (DD) file is installed.

System and software requirements for the Field Communicator

- System card that includes the "Easy Upgrade Option"
- Field Communicator Easy Upgrade Programming Utility
- HART® Device Description file

For more data, refer to the Field Communicator User's Manual.

9.5.2 Operation

INFORMATION!
The Field Communicator will not give you access to the service menu. A simulation is only possible for current outputs.

The Field Communicator and the device's local display use almost the same procedures to operate the signal converter. The online help for each menu item refers to the function number given to each menu item on the local device display. Protection of settings is the same as on the device's local display.

The Field Communicator always saves a complete configuration for communication with AMS.

For more data, refer to *HART®* menu tree for Basic-DD on page 118.

9.6 Asset Management Solutions (AMS)

The Asset Management Solutions Device Manager (AMS) is a PC program from Emerson Process Management which is designed to configure and manage HART®, PROFIBUS and Foundation-Fieldbus devices. Device Descriptions (DDs) are used to integrate different devices into the AMS.

9.6.1 Installation

Please read the README.TXT file in the Installation Kit.

If the Device Description has not been installed at this time, install the Installation Kit HART® AMS. This .EXE file is given on the DVD-ROM supplied with the device. You can also download the file from our website.

For installation data, refer to the "AMS Intelligent Device Manager Books Online" section "Basic AMS Functionality > Device Configurations > Installing Device Types > Procedures > Install device types from media".

9.6.2 Operation

INFORMATION!
For more data, refer to HART® menu tree for AMS on page 119.

9.6.3 Parameter for the basic configuration

Due to AMS requirements and conventions, there are differences when operating the signal converter with AMS and operating using the local keyboard. The service menu parameters are not supported and simulation is only possible for current outputs. The online help for each parameter contains its function number as a reference to the local device display.

9.7 Field Device Tool / Device Type Manager (FDT / DTM)

9.7.1 Installation

Before you operate the device, the Device Type Manager (Device DTM) must be installed in the Field Device Tool Container. This .msi file is given on the DVD-ROM supplied with the device. You can also download the file from our website. For installation and configuration data, refer to the documentation that is supplied with the Device DTM on the DVD-ROM or in the "Downloads" section of the website.

9.7.2 Operation

The DTM and the device's local display use almost the same procedures to operate the signal converter. For more data, refer to *Operation* on page 56.

9.8 HART® menu tree for Basic-DD

Abbreviations of the following tables:

- Opt Optional, depending on device version and configuration
- Rd Read only

9.8.1 Overview Basic-DD menu tree (positions in menu tree)

1 Measurements	1 Measurements	
	2 Output	
2 Configuration and Test	1 Info.	1 Identification
		2 Output
	2 Supervisor	1 Test
		2 Basic Parameters
		3 Signal Out
		4 Application
		5 Display
		6 Conversion Table
		7 Reset
3 Diag/Service	1 Status	1 Standard Status
		2 Device-specific Status
4 Access Rights	1 Access level	
	2 Method Login	
	3 Method entry Code	
5 HART variables		

9.8.2 Basic-DD menu tree (details for settings)

1 Measurements

1 Measurements	1 Level value Rd / 2 Distance value Rd / 3 Volume value Rd / 4 Ullage value Rd / 5 Reflection value Rd

2 Inputs/Outputs	1 PV Rd / 2 PV Loop Current Rd / 3 PV % rnge Rd

2 Configuration and Test

1 Info.	1 Identification	1 Serial Number Rd / 2 Converter Firmware Version Rd / 3 Sensor Firmware Version Rd / 4 HMI Firmware Version Rd
	2 Output	1 Function I Rd / 2 Output Range Rd / 3 PV URV Rd / 4 PV LRV Rd / 5 Output Error Delay Rd
2 Supervisor	1 Test	1 Test I
	2 Basis Parameters	1 Tank Height / 2 Blocking Distance / 3 Time Constant / 4 Pipe Enabled / 5 Pipe Diameter / 6 Pipe Height / 7 Antenna Extension / 8 Antenna Type / 9 Distance Piece / 15 Length Unit (HART) / 16 Volume Unit (HART)
	3 Signal Out	1 Function I / 2 PV LRV / 3 PV URV / 4 Output Range / 5 Output Error Delay / 6 Current Ouput Calibration Cust
	4 Application	1 Tank Type / 2 Tracking Velocity / 3 Esilon R Product / 4 Measuring Mode / 5 Overfill Detection / 6 Multiple Reflection / 7 Empty Spectrum / 8 Record Empty Spectrum
	5 Display	1 Language / 2 Display Length Unit / 3 Display Volume Unit
	6 Conversion Table	1 Input table / 2 Delete table
	7 Reset	1 Warm start / 2 Factory reset / 3 Reset Configuration Changed flag

3 Diag/Service

1 Status	1 Standard status	1 Device status Rd / 2 Write protect Rd	
	2 Device-specific status	1 Device failures	1 Error Rd / 2 Error Rd / 3 Error Rd
		2 Device warning maintenance required	1 Warning Rd
		3 Device warning out of specification	1 Warning Rd
		4 Info	1 Info Rd

4 Access Rights

1 Access Level	(Access Not Granted)
2 Method Login	1 No Access (Log Out) / 2 Supervisor (Normal User) / 3 Service
3 Method Entry Code	

5 HART variables

	1 Poll addr / 2 Tag / 3 Hardware rev Rd / 4 Software rev Rd / 5 Descriptor / 6 Date / 7 Message / 8 Manufacturer Rd / 9 Model Rd / Dev id Rd / Universal id Rd / Fld dev rev Rd / Num req preams Rd / Num resp preams Rd / Write protect Rd / Production number Rd / Final asmbly num Rd / PV is / SV is / TV is / QV is

9.9 HART® menu tree for AMS

Abbreviations of the following tables:

- Opt Optional, depending on device version and configuration
- Rd Read only

9.9.1 Overview AMS menu tree (positions in menu tree)

Process variables	Measurements	
	Analog Output	
Device Diagnostics	Overview	
	Fatal Errors	
	Warnings (Maintenance required)	
	Warnings (Out of specifications)	
	Warnings (Function check)	
Methods	Access Right	
	Tests	
	Calibrate	
	Empty Spectrum	
	Conversion Table	
	Master reset	
Configure / Setup	Basic Setup	Basic Parameters
		Local Display
		Application
	Analog Output	Output Functions
		Output 1
	Units	
	Device	
	HART	ID
		-
	Conversion table	

9.9.2 AMS menu tree (details for settings)

Process Variables

Measurements	Level Rd / Distance Rd / Volume/Mass/Flow Rd / Ullage Volume/Mass/Flow Rd / Reflection Rd
Primary Output	Function I / Loop currentRd / PV Percent of RangeRd

Device Diagnostics

Overview	Primary variable out of limits / Non-primary variable out of limits / Primary variable analog output saturated / Primary variable analog output fixed / Cold Start / Configuration changed / Field device malfunction
Fatal Errors (Failure)	Converter EEPROM error / Converter RAM error / Converter ROM error / Sensor EEPROM error / Sensor RAM error / Sensor ROM error / Current output drift / Sensor Microwave error / Converter Voltage error / Sensor Voltage error / Internal Comm. error / Temperat. out of range / Sensor not compatible / Sensor no signal / Sensor processing failure / Peak lost error / Overfill error
Warnings (Maintenance required)	Empty spectrum invalid / Signal weak / Signal strong / Bad Measurement Quality / Temperature < -35°C / Temperature > +75°C
Warnings (Out of specification)	Peak lost / Overfill / Temperature out of range

Warnings (Function check)	Local operation on the device
Information	Spectrum quality bad / Peak lost in tank bottom / Temperature out of range for HMI

Methods

Acess right	Log In/Log Out / Password Yes/No
Tests	Test Output I
Calibrate	D/A Trim
Empty Spectrum	Empty Spec. Rec.
Conversion Table	Input table / Delete table
Reset	Restart Device / Reset Factory / Rst Conf. Chged flag

Configure / Setup

Basic Setup	Basic Parameters	Tank Height / Blocking Distance / Time Constant / Stillwell Enabled / Stillwell Diameter / Stillwell Height / Antenna Extension / Antenna Type / Distance Piece / Tag
	Local Display	Display length unit / Display volume unit / Language
	Application	Tank Type / Tracking velocity / Epsilon R product / Measuring Mode / Overfill Detection / Multiple Reflection / Empty Spectrum On/Off
Analog Output	Output Functions	Function I / SV / TV / QV
	Output 1	Output Range / Output Error Delay / LRV / URV
Units	Length unit (HART) / Volume unit (HART) / Time constant	
Device	Model / Manufacturer / Fld dev rev / Software rev / Write protect / Interface option Rd / Descriptor / Message / Date / Serial number / Converter firmware number / Sensor Firmware number / HMI Firmware number	
HART	ID	Tag / Polling address / Device ID
		Universal revision / Fld dev rev Num / Num request preams
Conversion table	Number of points / Length unitRd / Conversion unitRd / Points (1...30 level-conversion pairs)	

10.1 Order code

Make a selection from each column to get the full order code. The characters of the order code highlighted in light grey describe the standard.

VF74	4	**OPTIFLEX 7400 C 24 GHz Non-contact Radar (FMCW) level meter for liquids**			
		Converter version (Housing material – Degrees of protection [IP code])			
		1	OPTIWAVE 7400 C: Compact version (Aluminium – IP 66/67)		
		2	OPTIWAVE 7400 C: Compact version (Stainless steel – IP 66/67)		
		3	OPTIWAVE 7400 F: Remote version (converter and antenna housing: Aluminium – IP 66/67)		
		4	OPTIWAVE 7400 F: Remote version (converter and antenna housing: Stainless steel – IP 66/67)		
		5	OPTIWAVE 7400 F: Remote version (converter housing: Aluminium – IP 66/67 + antenna housing: Stainless steel – IP 66/67)		
			Approval		
			0	Without	
			1	ATEX Ex ia IIC T2…T6 + DIP ①	
			2	ATEX Ex d ia IIC T2..T6 + DIP ①	
			3	ATEX Ex ic IIC T2…T6 + DIP ①	
			6	IECEx Ex ia IIC T2…T6 + DIP ①	
			7	IECEx Ex d ia IIC T2…T6 + DIP ①	
			8	IECEx Ex ic IIC T2…T6 + DIP ①	
			A	cFMus IS CL I/II/III, DIV 1, GPS A-G; CL I, Zone 0/20, Ex ia IIC/IIIC T2…T6	
			B	cFMus XP-IS/DIP CL I/II/III, DIV 1, GPS A-G (A not for CAN); CL I, Zone 0/20, Ex d/tb IIC/IIIC T2…T6	
			C	cFMus NI CL I/II/III, DIV 2, GPS A-G; CL I, Zone 2, Ex nA IIC T2...T6	
			L	NEPSI Ex ia IIC T2 ~ T6 + DIP ①	
			M	NEPSI Ex d ia IIC T2 ~ T6 + DIP ①	
			N	NEPSI Ex ic IIC T2 ~ T6 + DIP ①	
				Other approval	
				0	Without
				1	SIL 2 – only available with 4…20 mA output
				4	CRN (Canadian Registration Number)
				5	CRN + SIL 2 – only available with 4…20 mA output
VF74	4				**Order code (complete this code on the pages that follow)**

						Process seal (Temperature / Pressure / Material – Remarks)
					0	Without
					1	-40...+150°C (-40…+302°F) / -1...40 barg (-14.5…580 psig) / FKM/FPM – for Drop antennas (non-Ex) only
					2	-50...+150°C (-58…+302°F) / -1...40 barg (-14.5…580 psig) / EPDM – for Drop antennas (non-Ex) only
					4	-40...+150°C (-40…+302°F) / -1…16 barg (-14.5…232 psig) / PEEK – for hygienic connections only
					6	-40...+150°C (-40…+302°F) / -1...40 barg (-14.5…580 psig) / FKM/FPM – for Horn and Drop antennas
					7	-50...+150°C (-58…+302°F) / -1...40 barg (-14.5…580 psig) / EPDM – for Horn and Drop antennas
					8	-20...+150°C (-4…+302°F) / -1...40 barg (-14.5…580 psig) / Kalrez® 6375 – for Horn and Drop antennas
					A	-40...+150°C (-40…+302°F) / -1...40 barg (-14.5…580 psig) / FKM/FPM – Metaglas® dual sealing barrier for Horn and Drop antennas
					B	-50...+150°C (-58…+302°F) / -1...40 barg (-14.5…580 psig) / EPDM – Metaglas® dual sealing barrier for Horn and Drop antennas
					C	-20...+150°C (-4…+302°F) / -1...40 barg (-14.5…580 psig) / Kalrez® 6375 – Metaglas® dual sealing barrier for Horn and Drop antennas
					D	-40...+200°C (-40…+392°F) / -1...40 barg (-14.5…580 psig) / FKM/FPM – for Horn and Drop PEEK antennas
					E	-20...+200°C (-4…+392°F) / -1...40 barg (-14.5…580 psig) / Kalrez® 6375 – for Horn and Drop PEEK antennas
					F	-40...+200°C (-40…+392°F) / -1...40 barg (-14.5…580 psig) / FKM/FPM – Metaglas® dual sealing barrier for Horn and Drop PEEK antennas
					G	-20...+200°C (-4…+392°F) / -1...40 barg (-14.5…580 psig) / Kalrez® 6375 – Metaglas® dual sealing barrier for Horn and Drop PEEK antennas
					K	-40...+200°C (-40…+392°F) / -1…100 barg (-14.5…1450 psig) / FKM/FPM – for Horn antennas only
					L	-50...+150°C (-58…+302°F) / -1…100 barg (-14.5…1450 psig) / EPDM – for Horn antennas only
					M	-20...+200°C (-4…+392°F) / -1…100 barg (-14.5…1450 psig) / Kalrez® 6375 – for Horn antennas only
					N	-40...+200°C (-40…+392°F) / -1…100 barg (-14.5…1450 psig) / FKM/FPM – Metaglas® dual sealing barrier for Horn antennas only
					P	-50...+150°C (-58…+302°F) / -1…100 barg (-14.5…1450 psig) / EPDM – Metaglas® dual sealing barrier for Horn antennas only
					R	-20...+200°C (-4…+392°F) / -1…100 barg (-14.5…1450 psig) / Kalrez® 6375 – Metaglas® dual sealing barrier for Horn antennas
VF74	4					**Order code (complete this code on the pages that follow)**

						Antenna (Antenna type / Material)	
						0	Without
						1	Metallic Horn (machined) DN 40 (1.5¨) / 316 L
						2	Metallic Horn (machined) DN 50 (2¨) / 316 L
						3	Metallic Horn (sheet metal) DN 65 (2.5¨) / 316 L
						4	Metallic Horn (sheet metal) DN 80 (3¨) / 316 L
						5	Metallic Horn (sheet metal) DN 100 (4¨) / 316 L
						6	Metallic Horn (sheet metal) DN 150 (6¨) / 316 L
						7	Metallic Horn (sheet metal) DN 200 (8¨) / 316 L
						A	Drop DN 80 (3¨) / PP
						B	Drop DN 80 (3¨) + flange plate DN 80–100 (3¨ – 4¨) / PP
						C	Drop DN 80 (3¨) + flange plate DN 150–200 (6¨ – 8¨) / PP
						D	Drop DN 150 (6¨) / PP
						E	Drop DN 150 (6¨) + flange plate DN 150–200 (6¨ – 8¨) / PP
						G	Drop DN 80 (3¨) / PTFE
						H	Drop DN 80 (3¨) + flange face DN 80–100 (3¨ – 4¨) / PTFE
						K	Drop DN 80 (3¨) + flange face DN 150–200 (6¨ – 8¨) / PTFE
						M	Hygienic antenna FDA conform / PEEK
						P	Drop DN 80 (3¨) / PEEK
						R	Drop DN 80 (3¨) + flange plate DN 80–100 (3¨ – 4¨) / PEEK
						S	Drop DN 80 (3¨) + flange plate DN 150–200 (6¨ – 8¨) / PEEK
						T	Drop DN 150 (6¨) / PEEK
						U	Drop DN 150 (6¨) + flange plate DN 150–200 (6¨ – 8¨) / PEEK
VF74	4						**Order code (complete this code on the pages that follow)**

							Antenna extension (Extension / Material)				
							0	Without			
							1	105 mm (4¨) / 316 L – for devices with Horn or Drop antennas			
							2	210 mm (8¨) / 316 L – for devices with Horn or Drop antennas			
							3	315 mm (12¨) / 316 L – for devices with Horn or Drop antennas			
							4	420 mm (16¨) / 316 L – for devices with Horn or Drop antennas			
							5	525 mm (20¨) / 316 L – for devices with Horn or Drop antennas			
							6	630 mm (24¨) / 316 L – for devices with Horn antennas only			
							7	735 mm (29¨) / 316 L – for devices with Horn antennas only			
							8	840 mm (33¨) / 316 L – for devices with Horn antennas only			
							A	945 mm (37¨) / 316 L – for devices with Horn antennas only			
							B	1050 mm (41¨) / 316 L – for devices with Horn antennas only			
							D	105 mm (4¨) / PP – for devices with a PP Drop antenna + flange plate option only			
							E	210 mm (8¨) / PP – for devices with a PP Drop antenna + flange plate option only			
							F	315 mm (12¨) / PP – for devices with a PP Drop antenna + flange plate option only			
							G	420 mm (16¨) / PP – for devices with a PP Drop antenna + flange plate option only			
							H	525 mm (20¨) / PP – for devices with a PP Drop antenna + flange plate option only			
							N	105 mm (4¨) / PTFE – for devices with a PTFE Drop antenna + flange plate option only			
							P	210 mm (8¨) / PTFE – for devices with a PTFE Drop antenna + flange plate option only			
							S	105 mm (4¨) / PEEK – for devices with a PEEK Drop antenna + flange plate option only			
							T	210 mm (8¨) / PEEK – for devices with a PEEK Drop antenna + flange plate option only			
							U	315 mm (12¨) / PEEK – for devices with a PP Drop antenna + flange plate option only			
							X	L-bend (right angle) extension / 316 L			
								Process connection (Size / Pressure class / Flange face finish)			
								0	0	0	Without
								Threaded – ISO 228			
								G	P	O	G 1½
								Threaded – ASME B1.20.1			
								G	A	0	1½ NPT
								EN / DIN flanges – EN 1092-1			
								G	G	1	DN40 PN40 – Type B1
								G	H	1	DN40 PN63 – Type B1
								G	K	1	DN40 PN100 – Type B1
								H	E	1	DN50 PN16 – Type B1
								H	G	1	DN50 PN40 – Type B1
								H	H	1	DN50 PN63 – Type B1
								H	K	1	DN50 PN100 – Type B1
VF74	4							**Order code (complete this code on the pages that follow)**			

								L	E	1	DN80 PN16 – Type B1
								L	G	1	DN80 PN40 – Type B1
								L	H	1	DN80 PN63 – Type B1
								L	K	1	DN80 PN100 – Type B1
								M	E	1	DN100 PN16 – Type B1
								M	G	1	DN100 PN40 – Type B1
								M	H	1	DN100 PN63 – Type B1
								M	K	1	DN100 PN100 – Type B1
								P	E	1	DN150 PN16 – Type B1
								P	G	1	DN150 PN40 – Type B1
								P	H	1	DN150 PN63 – Type B1
								P	K	1	DN150 PN100 – Type B1
								R	E	1	DN200 PN16 – Type B1
								R	G	1	DN200 PN40 – Type B1
								ASME B16.5 / ANSI flanges			
								G	1	A	1½" 150 lb RF (Raised Face)
								G	2	A	1½" 300 lb RF (Raised Face)
								G	3	A	1½" 600 lb RF (Raised Face)
								G	4	M	1½" 900 lb RJ (Ring Joint)
								G	5	M	1½" 1500 lb RJ (Ring Joint)
								H	1	A	2" 150 lb RF (Raised Face)
								H	2	A	2" 300 lb RF (Raised Face)
								H	3	A	2" 600 lb RF (Raised Face)
								H	4	M	2" 900 lb RJ (Ring Joint)
								H	5	M	2" 1500 lb RJ (Ring Joint)
								L	1	A	3" 150 lb RF (Raised Face)
								L	2	A	3" 300 lb RF (Raised Face)
								L	3	A	3" 600 lb RF (Raised Face)
								L	4	A	3" 900 lb RJ (Ring Joint)
								M	1	A	4" 150 lb RF (Raised Face)
								M	2	A	4" 300 lb RF (Raised Face)
								M	3	A	4" 600 lb RF (Raised Face)
								M	4	A	4" 900 lb RJ (Ring Joint)
								P	1	A	6" 150 lb RF (Raised Face)
								P	2	A	6" 300 lb RF (Raised Face)
								R	1	A	8" 150 lb RF (Raised Face)
								R	2	A	8" 300 lb RF (Raised Face)
VF74	4										**Order code (complete this code on the pages that follow)**

								JIS B2220 flanges						
								H	U	P	50A JIS 10K RF (Raised Face)			
								L	U	P	80A JIS 10K RF (Raised Face)			
								M	U	P	100A JIS 10K RF (Raised Face)			
								P	U	P	150A JIS 10K RF (Raised Face)			
								R	U	P	200A JIS 10K RF (Raised Face)			
								Hygienic connections						
								H	0	S	2¨ Triclamp ISO 2852			
								H	0	T	DN50 DIN 11851			
								H	0	U	DN51 SMS 1145			
								H	0	W	DN50 Neumo Bioconnect			
										Alternative flange faces				
										2	Type B2, EN 1092-1 (surface roughness must be specified in the order)			
										3	Type C, EN 1092-1 (Tongue)			
										4	Type D, EN 1092-1 (Groove)			
										5	Type E, EN 1092-1 (Spigot)			
										6	Type F, EN 1092-1 (Recess)			
										B	FF, ASME B16.5 (Flat Face)			
										M	RJ, ASME B16.5 (Ring Joint)			
											Output			
											1	2-wire / 4...20 mA passive HART		
											A	2-wire / FOUNDATION fieldbus		
											B	2-wire / PROFIBUS PA		
												Cable entry / Cable gland		
												1	M20×1.5 / without	
												2	M20×1.5 / Plastic	
												3	M20×1.5 / Brass	
												4	M20×1.5 / Stainless Steel	
												A	½ NPT (Brass) / without	
												B	½ NPT (Stainless Steel) / without	
													Housing (Orientation / Display / Weather protection	
													A	Vertical / Without / Without
													B	Vertical / Display on top / Without
													D	Vertical / Without / With
													E	Vertical / Display on top / With
VF74	4													**Order code (complete this code on the pages that follow)**

														Display language (English is included in all language packs)							
														0	Without						
														1	English						
														2	German						
														3	French						
														4	Italian						
														5	Spanish						
														6	Portuguese						
														7	Japanese						
														8	Chinese (simplified)						
														A	Russian						
														B	Polish						
														C	Turkish						
														D	Czech						
															Version						
															0	KROHNE (RAL 9006 / RAL 5005)					
															6	KROHNE USA (FCC)					
															A	KMIC L (for liquid applications)					
																0	**Options for remote version (OPTIWAVE 7400 F)**				
																	0	Without			
																	6	Signal cable 10m / Grey (std) or Blue (Ex)			
																	7	Signal cable 25m / Grey (std) or Blue (Ex)			
																	8	Signal cable 50m / Grey (std) or Blue (Ex)			
																	A	Signal cable 75m / Grey (std) or Blue (Ex)			
																	B	Signal cable 100m / Grey (std) or Blue (Ex)			
																		Adaptor for OPTIWAVE 7300 C process connections			
																		0	Without		
																		1	Adaptor for OPTIWAVE 7300 C flange system (before 2009)		
																			Calibration certificate		
																			0	Without	
																			1	Calibration certificate ±2 mm (0.2¨) up to 10 m (32.81 ft) 2 points	
																			2	Calibration certificate ±2 mm (0.2¨) up to 10 m (32.81 ft) 5 points	
																			3	Calibration certificate ±2 mm (0.2¨) up to 10 m (32.81 ft) 5 points specified by the customer min. ≥ 400 mm (12¨)	
																				Tag N°	
																				0	Without
																				3	Tag n° on st. steel plate
										1						0					**Order code (complete this code on the pages that follow)**

																					Other constructions	
																					0	Without
																					1	NACE-Design (MR 0175 / MR 0103 / ISO 15156)
																					3	Heating / Cooling (Metallic Horn only)
																					5	Purging (Metallic Horn only)
																					6	Purging + Heating / Cooling (Metallic Horn only) ②
VF74	4										1					0						**Order code**

① DIP= Dust Ignition Proof

② Minimum flange diameter DN150 (6")

10.2 Spare parts

We supply spare parts for this device. When you send an order for a mechanical spare part, use the reference numbers in the table that follows. When you send an order for an electronic spare part, refer to *Order code* on page 122 and use the VF74 order code.

Mechanical spare parts

XF74	4	0	0	0			**OPTIFLEX 7400 C 24 GHz Non-contact Radar (FMCW) level meter for liquids**
							Pressure / Temperature / Sealing
					0		Without
					1		40 bar / -40°C...+150°C (-40°F…+302°F) / FKM, FPM - for the Metallic Horn antenna and Wave Guide
					5		40 bar / -50°C...+130°C (-58°F…+266°F) / EPDM - for the Metallic Horn antenna and Wave Guide
					6		40 bar / -20°C...+150°C (-4°F…+302°F) / Kalrez 6375 - for the Metallic Horn antenna and Wave Guide
					A		40 bar / -60°C...+130°C (-76°F…+266°F) / PFA - for the Metallic Horn antenna and Wave Guide
					D		40 bar / -40°C...+200°C (-40°F…+392°F) / FKM (Viton) - for the Metallic Horn antenna and Wave Guide
					K		40 bar / -20°C...+250°C (-4°F…+482°F) / Kalrez 6375 - for the Metallic Horn antenna and Wave Guide
					R		16 bar / -20°C...+100°C (-4°F…+212°F) / PP - for the PP Wave Horn antenna
					T		40 bar / -50°C...+150°C (-58°F…+302°F) / PTFE - for the PTFE Wave Horn antenna
						Material and Antenna	
						0	Without
						1	316L / Metallic horn (sheet metal) DN80 (3¨)
						2	316L / Metallic horn (sheet metal) DN100 (4¨)
						3	316L / Metallic horn (sheet metal) DN150 (6¨)
						4	316L / Metallic horn (sheet metal) DN200 (8¨)
						G	PP / Wave Horn, maximum socket length 200 mm / 7.9¨
						H	PTFE / Wave Horn, maximum nozzle length 200 mm / 7.9¨
						L	316L /Metallic wave guide ≤1 m (3.28 ft)
						M	316L /Metallic wave guide ≤1.5 m (4.92 ft)
						N	316L / Metallic wave guide ≤2 m (6.56 ft)
						P	316L / Metallic wave guide ≤2.5 m (8.2 ft)
						R	316L / Metallic wave guide ≤3 m (9.84 ft)
						S	316L / Metallic wave guide ≤3.5 m (11.48 ft)
						T	316L / Metallic wave guide ≤4 m (13.12 ft)
						U	316L / Metallic wave guide ≤4.5 m (14.76 ft)
						V	316L / Metallic wave guide ≤5 m (16.4 ft)
						W	316L / Metallic wave guide ≤5.5 m (18.04 ft)
						X	316L / Metallic wave guide ≤6 m (19.68 ft)
XF74	4	0	0	0			**Order code (complete this code on the pages that follow)**

							Material and Antenna extension				
							0	Without			
							6	PTFE, antenna extension for maximum nozzle length 300 mm / 11.8¨ ①			
							7	PTFE, antenna extension for maximum nozzle length 400 mm / 15.7¨ ①			
							8	PTFE, antenna extension for maximum nozzle length 500 mm / 19.7¨ ①			
							E	316L / 100 mm (4¨) for the Metallic Horn antenna option only ①			
							F	316L / 200 mm (8¨) for the Metallic Horn antenna option only ①			
							G	316L / 300 mm (12¨) for the Metallic Horn antenna option only ①			
							H	316L / 400 mm (16¨) for the Metallic Horn antenna option only ①			
							K	316L / 500 mm (20¨) for the Metallic Horn antenna option only ①			
							R	316L / 1000 mm (40¨) for the Metallic Horn antenna option only ①			
							W	316L / "S" extension ①			
							X	316L / "L" (right angle) extension ①			
							Y	316L / Distance piece for high-temperature (HT) version (Metallic Horn or Wave Guide antennas)			
								Process connection: Size / Pressure rating / Flange finish			
								0	0	0	Without
								Threaded - ISO 228			
								G	P	0	G 1½ ②
								Threaded - ASME B1.20.1			
								G	A	0	1½ NPT ②
								EN / DIN Flanges - EN 1092-1 ③			
								H	E	1	DN50 PN16 - Type B1 flange ④
								H	G	1	DN50 PN40 - Type B1 flang ④
								L	E	1	DN80 PN16 - Type B1 flange
								L	G	1	DN80 PN40 - Type B1 flange
								M	E	1	DN100 PN16 - Type B1 flange
								M	G	1	DN100 PN40 - Type B1 flange
								P	E	1	DN150 PN16 - Type B1 flange
								P	G	1	DN150 PN40 - Type B1 flange
								R	E	1	DN200 PN16 - Type B1 flange ⑤
								R	G	1	DN200 PN40 - Type B1 flange ⑤
								ASME B16.5 / ANSI Flanges ③			
								H	1	A	2¨ 150 lb RF ④
								H	2	A	2¨ 300 lb RF ④
								L	1	A	3¨ 150 lb RF
								L	2	A	3¨ 300 lb RF
								M	1	A	4¨ 150 lb RF
								M	2	A	4¨ 300 lb RF
								P	1	A	6¨ 150 lb RF
								P	2	A	6¨ 300 lb RF
								R	1	A	8¨ 150 lb RF ⑤
								R	2	A	8¨ 300 lb RF ⑤
XF74	4	0	0	0							**Order code (complete this code on the pages that follow)**

								JIS B2220 Flanges															
								H	U	P	10K 50A RF ④												
								L	U	P	10K 80A RF												
								M	U	P	10K 100A RF												
								P	U	P	10K 150A RF												
								R	U	P	10K 200A RF ⑤												
										Alternative flange faces													
										0	Without												
										2	Type B2, EN 1092-1 (surface roughness must be specified in the order)												
										3	Type C, EN 1092-1 (Tongue)												
										4	Type D, EN 1092-1 (Groove)												
										5	Type E, EN 1092-1 (Spigot)												
										6	Type F, EN 1092-1 (Recess)												
										B	FF, ASME B16.5 (Flat face)												
											0	0	0	0	**Version**								
															0	Standard orders and orders for solid applications in China							
															6	Orders with FCC radio approval (FCC Part 15 and RSS-210)							
															A	Orders for liquid applications in China							
																0	0	**Adaptor**					
																		0	Without				
																		1	Adaptor for BM 70x flange system				
																			0	**TAG Number**			
																				0	Without		
																				1	Tag No. stainless steel plate (16 characters max.)		
																					Extra option		
																					0	Without	
																					1	NACE design (MR0175 / MR0103 / ISO 15156)	
																					3	Heating / Cooling ⑥	
																					5	Purge ⑥	
																					6	Purge + Heating / Cooling ⑥	
XF74	4										0	0	0	0		0	0		0				**Order code**

① For device dimensions, refer to the "Dimensions and weights" section
② For the PP Wave Horn antenna option only
③ Other flange faces are available. Refer to your local supplier for more data. Flanges with the PTFE Wave Horn antenna option have a slip on-type design with an anti-blowout feature.
④ Minimum flange size for the PTFE Wave Horn antenna. This is not available for the Metallic Horn antenna.
⑤ This flange is not available for the PTFE Wave Horn antenna option
⑥ For DN150 and DN200 Metallic Horn antenna only

Other spare parts

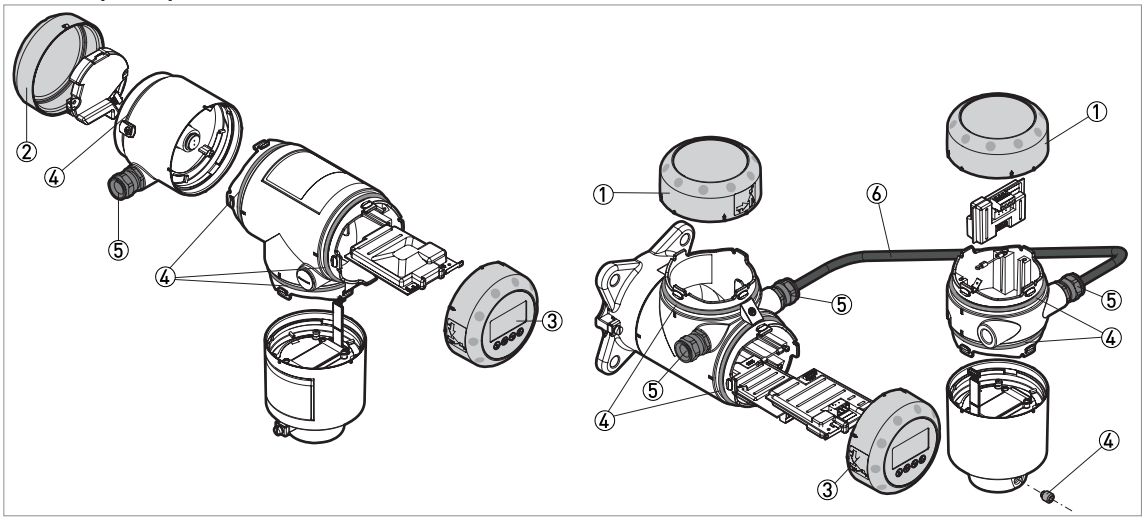

Figure 10-1: Other spare parts

① Cover without LCD display
② Cover for Ex d module
③ Cover with LCD display
④ Set of fasteners for housing (lock screw, gaskets)
⑤ Cable gland
⑥ Signal cable (Non-Ex: grey, Ex: blue)

DANGER!
Remote version: Make sure that replacement signal cables for Ex-approved devices are supplied by the manufacturer. Use of this signal cable is mandatory.

Item	Description	Quantity	Part reference
①	Cover without LCD display	1	XF50010100
②	Cover for Ex d module ①	1	XF50010200
③	Cover with LCD display (English / German / French / Italian)	1	XF50010300
	Cover with LCD display (English / Spanish / French / Portuguese)	1	XF50010400
	Cover with LCD display (English / Russian / Chinese / Japanese)	1	XF50010500
④	Set of fasteners for housing (lock screw, gaskets)	1 screw, 10 gaskets	XF50010900
⑤	Cable gland / M20×1.5; Plastic; Black; Non-Ex	1	XF50030100
	Cable gland / M20×1.5; Plastic; Blue; Ex i	1	XF50030200
	Cable gland / M20×1.5; Brass; Ex d	1	XF50030300
	Cable gland / M20×1.5; Stainless Steel	1	XF50030400

Item	Description	Quantity	Part reference
⑥	Signal cable 10 m / 32.8 ft (non-Ex: grey) ②	1	XF50040100
	Signal cable 25 m / 82 ft (non-Ex: grey) ②	1	XF50040200
	Signal cable 50 m / 164 ft (non-Ex: grey) ②	1	XF50040300
	Signal cable 75 m / 246 ft (non-Ex: grey) ②	1	XF50040400
	Signal cable 100 m / 328 ft (non-Ex: grey) ②	1	XF50040500
	Signal cable 10 m / 32.8 ft (Ex: blue) ③	1	XF50040600
	Signal cable 25 m / 82 ft (Ex: blue) ③	1	XF50040700
	Signal cable 50 m / 164 ft (Ex: blue) ③	1	XF50040800
	Signal cable 75 m / 246 ft (Ex: blue) ③	1	XF50040900
	Signal cable 100 m / 328 ft (Ex: blue) ③	1	XF50041000

① Ex d-approved devices only
② For the remote version
③ For the remote version. Make sure that replacement signal cables for Ex-approved devices are supplied by the manufacturer. Use of this signal cable is mandatory.

10.3 Accessories

We supply accessories for this device. When you send an order for a accessories, please give the reference numbers that follow:

Place holder

Figure 10-2: Accessories

① HMI service tool
② Viator RS232 / HART converter
③ Viator USB / HART converter

Item	Description	Quantity	Part reference
①	HMI Service tool (English / German / French / Italian) ①	1	XF74010600
	HMI Service tool (English / Spanish / French / Portuguese) ①	1	XF74010700
	HMI Service tool (English / Russian / Chinese / Japanese) ①	1	XF74010800
	HMI Service tool (English / Czech / Polish / Turkish) ①	1	XF74xxxxxx
②	Viator RS232 / HART converter	1	XF74020600
③	Viator USB / HART converter	1	XF74020700
④	EMI/RFI shielding gasket	1	XF74050600

① If the device does not have the LCD display option, use this accessory to change the device configuration

10.4 Glossary

D

Dead zone Non-measurement zone.

Dielectric constant An electrical property of the product to be measured used in Radar measurement. Also known as εr, DK and relative permittivity. Defines the strength of the wave reflected back to the device's signal converter.

Distance The distance from the face of flange to the level (1 product) or the surface of the top product (2 or more products). See the diagrams at the end of this section.

Drop antenna A new generation of antenna made of PP or PTFE. It has an ellipsoidal shape for a more precise emission of radar signals.

DTM Device Type Manager. A driver for use in the PACTware™ program. All data and functions of the device are included in it.

E

Electromagnetic compatibility Defines how much a device influences or is influenced by other devices that generate electromagnetic fields during operation. Refer to European standard EN 61326-1 for further details.

F

FMCW Frequency-modulated continuous-wave radar technology. The signal is continuously present, but the frequency is modulated, usually in successive linear ramps over time (frequency sweeps).

H

Hazardous area An area with a potentially explosive atmosphere. Trained personnel can install and use a device in this area. The device must be ordered with the appropriate options. The device requires approvals (ATEX, IECEx, FM, CSA, NEPSI etc.) related to site specifications. You can find more data about hazardous areas in the Ex Manuals and Ex Certificates of Compliance.

Horn (cone) antenna A common antenna for most applications. It is used for the controlled emission and collection of radar signals.

Hygienic antenna An antenna made of a material that agrees with FDA regulations. It can be supplied with common hygienic process connection options (Tri-Clamp®, BioControl®, SMS, ...).

I

Interference signals False radar reflections.

L

Level Height from the bottom of the tank (user-defined) to the surface of the top product (Tank height – distance). See the diagrams at the end of this section.

M

Mass Total mass of tank contents.

O

Operators Users who can choose how to display measurements. They cannot configure the device in supervisor mode.

P

PACTware™ Software that operates and configures field devices from a remote workstation. It is not necessary to use fieldbus software or programs developed by the manufacturer.

R

Radar reflection Signal reflected from the surface of the tank contents.

S

Signal converter A set of electronic components in the device that send the measurement signal through some signal filters.

Supervisor Users who can configure the device in supervisor mode. They cannot configure the device in service mode.

U

Ullage volume Unfilled volume. See the diagrams at the end of this section.

V

Volume Total volume of tank contents.

Place holder

Figure 10-3: Measurement definitions: distance

① Distance
② Dead zone
③ Flange facing
④ Gas (Air)
⑤ Tank height
⑥ Ullage volume or mass

Place holder

Figure 10-4: Measurement definitions: level

① Level
② Volume or mass

KROHNE – Process instrumentation and measurement solutions

- Flow
- Level
- Temperature
- Pressure
- Process Analysis
- Services

Head Office KROHNE Messtechnik GmbH
Ludwig-Krohne-Str. 5
47058 Duisburg (Germany)
Tel.: +49 203 301 0
Fax: +49 203 301 10389
info@krohne.com

The current list of all KROHNE contacts and addresses can be found at:
www.krohne.com

© KROHNE 12/2015 - 4003518001 - MA OPTIWAVE7400-24-R01-en - Subject to change without notice.