Hardware Description

The access point has connections on both the rear panel and the bottom panel of the device.

Rear Panel Connections

PoE+ IN LAN/Uplink

This is an uplink LAN port that connects the access point to a wired LAN connection through a switch or hub. This port also provides PoE+ (802.3at) power for the device.

Bottom Panel Connections

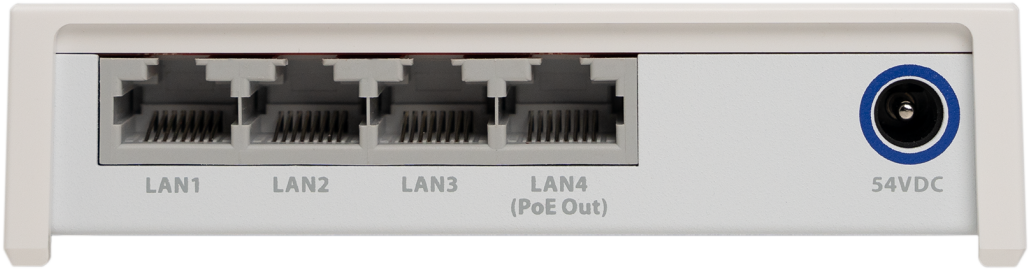

LAN1, LAN2, LAN3

These are standard RJ45 connectors that support link speeds of 10/100/1000 Mbps for a wired connection.

LAN4 (PoE Out)

This is a standard RJ45 connector that supports link speeds of 10/100/1000 Mbps for a wired connection. This port can also provide PoE (802.3af) power for another device. The access point must be connected to PoE+ (802.3at) or a power adapter to enable power on the LAN4 (PoE Out) port.

> The PoE Out port is intended to power small devices such as IP-based phones, cameras, or other similar devices. WatchGuard recommends that you do not power another access point from this port.

54VDC Input

If PoE power is unavailable, you can power the device with the optional 54VDC power adapter.

Side Panel

LED Indicators

The access point has LED indicators on the side of the device that shows status conditions for the device connection to WatchGuard Cloud. For more information, go to *LED Indicators*.

Reset Button

Resets the access point to factory-default settings.

- Use a paper clip or other small object to press the reset button through the hole.
- Press and hold the reset button for up to 10 seconds until all LEDs go off to indicate that the access point is reset and has rebooted.
- If you press and hold the reset button for 5 seconds or less, the access point is restarted and is not reset to factory-default settings.

You can also reset the device from the access point command line interface (CLI). For more information, go to Access Point Command Line Interface.

Mounting Bracket Screw Hole

Insert the included screw to secure the access point to the mounting bracket after installation. For more information, go to *Mount and Connect the Access Point*.

LED Indicators

Wi-Fi in WatchGuard Cloud access points have LED indicators that can show different status conditions while booting, activation validation, feature key download, WatchGuard Cloud device registration, and the connection to WatchGuard Cloud.

The access point briefly passes through each stage until the device is connected to WatchGuard Cloud and shows a solid blue LED indicator. If the access point remains in the same state for a long period of time without a solid blue LED indicator status, there might be a network issue, activation or feature key issue, or a problem with your WatchGuard Cloud account.

Check the following table for the status of the LED indicators and how to troubleshoot the issue.

LED Color	Status	Troubleshooting
Solid Red or Orange	Device is booting	If the access point remains in this state, the access point processes might not have started, or there might be an issue with the access point firmware. ▪ Disconnect and reconnect power to reboot the access point to see whether the device connects. ▪ Try to log in to the access point Web UI or command line interface (CLI) to check the device status, current firmware version, and run diagnostic tests. For more information, go to Access Point Web UI or Access Point Command Line Interface.
Flashing Red or Orange (Fast: 100 milliseconds)	Validate access point activation and download feature key	If the access point remains in this state: ▪ Make sure you have activated your access point with a valid device serial number and license key in your WatchGuard account. The license key must be for a WatchGuard Standard or USP Wi-Fi license for Wi-Fi in WatchGuard Cloud. ▪ Make sure the access point is connected to the network and has received an IP address from DHCP. ▪ Make sure the access point can connect to **.watchguard.io* for product activation and feature key updates. ▪ If you set up an access point behind a firewall that performs inspection on HTTPS traffic, you must add **.watchguard.io* to the content inspection exception / bypass list to enable the access point to receive a feature key from WatchGuard servers. On the WatchGuard Firebox, this is enabled by default for cloud-managed Fireboxes in WatchGuard Cloud. ▪ Use the access point Web UI or command line interface (CLI) to check the feature key status, download a feature key, and run diagnostic tests. For more information, go to Access Point Web UI or Access Point Command Line Interface.
Flashing Red or Orange (Medium: 500 milliseconds)	WatchGuard Cloud device registration	If the access point remains in this state: ▪ Make sure access point can connect to **.watchguard.com* for WatchGuard Cloud device registration. ▪ For service providers, make sure you have allocated the access point from your inventory to a subscriber account.

LED Color	Status	Troubleshooting
		For more information, see Access Point Allocation. ▪ Make sure you have added the access point to your WatchGuard Cloud subscriber account. For more information, see Add an Access Point to WatchGuard Cloud.
Flashing Red or Orange (Slow: 2 seconds)	Connection to WatchGuard Cloud servers	If the access point remains in this state: ▪ Make sure the access point can connect to **.watchguard.com* for WatchGuard Cloud management connections and is not blocked by a firewall or other network device. ▪ Make sure you do not have an expired MSSP license for the access point. ▪ Check the access point allocation status to see whether the device was deallocated from the subscriber account.
Solid Blue	Successfully connected to WatchGuard Cloud	Device is online and connected to WatchGuard Cloud.
Flashing Blue	Flash LED action from WatchGuard Cloud	LED flashes blue for 60 seconds for identification.
Flashing Blue and Red	Access point failed system integrity check	If the device LEDs flash alternating blue and red every second, the device has failed a system integrity check and has rebooted in failsafe mode. You must contact WatchGuard Support to replace the device.

Mount and Connect the Access Point

Your package includes the access point mounting bracket and bracket screw (one spare screw is included).

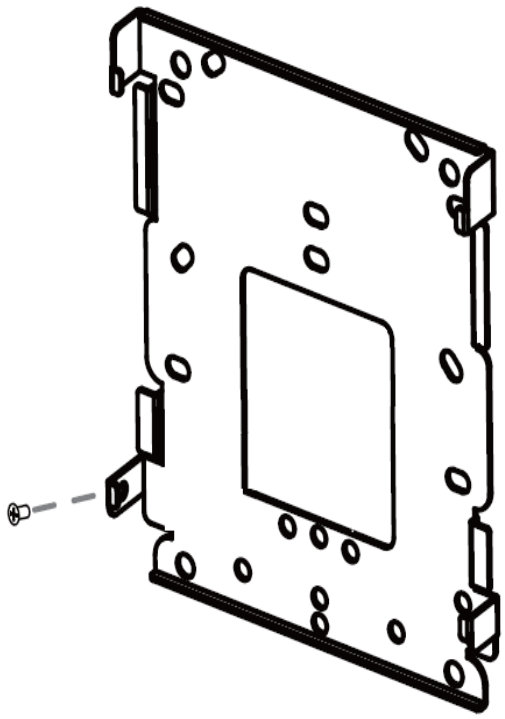

The MAC address and serial number of your access point are printed on a label on the back of the device. Make sure you record this information before you mount the device.

Mount the Access Point

To mount the access point on an existing wall outlet box:

1. Remove the existing cover and screws from the wall plate of the outlet box.

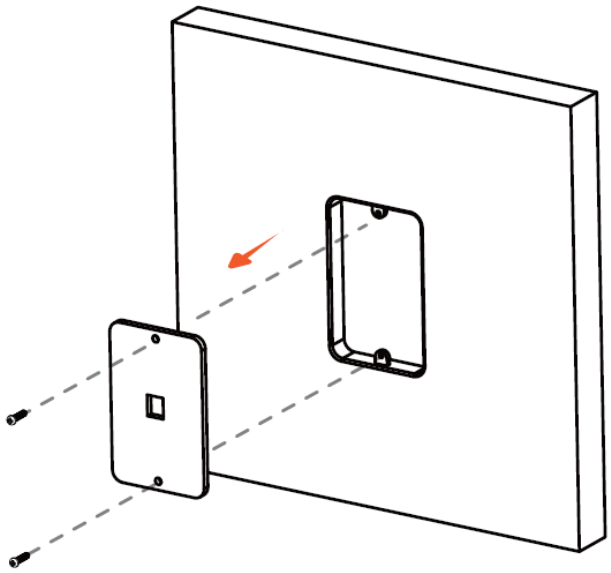

2. Pull the Ethernet network cable through the center of the mounting bracket.

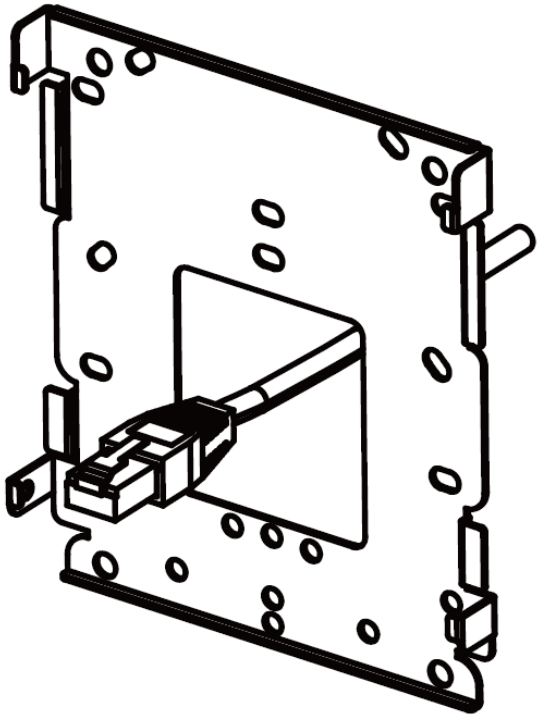

3. Align the mounting bracket with the outlet box and attach the mounting bracket with the original cover screws.

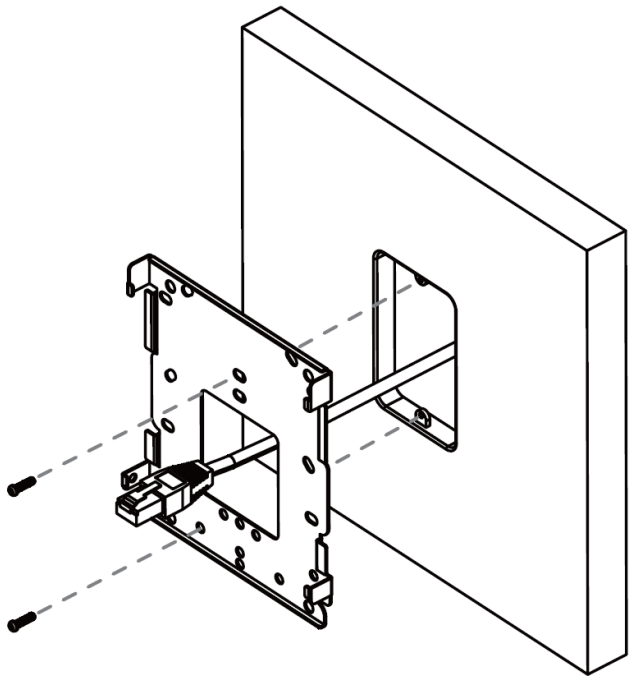

4. Connect the Ethernet cable from your network to the PoE+ IN LAN/Uplink port on the rear panel of the access point before you attach the device to the mounting bracket.
   Align the tabs on the mounting bracket with the slots on the rear panel of the access point, and slide the device down onto the mounting bracket.

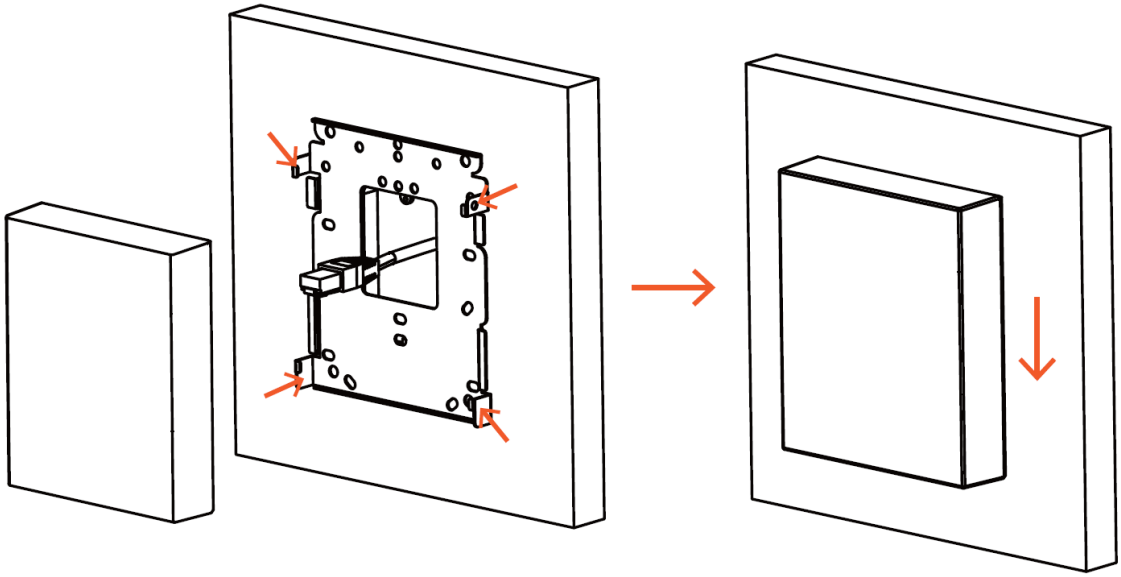
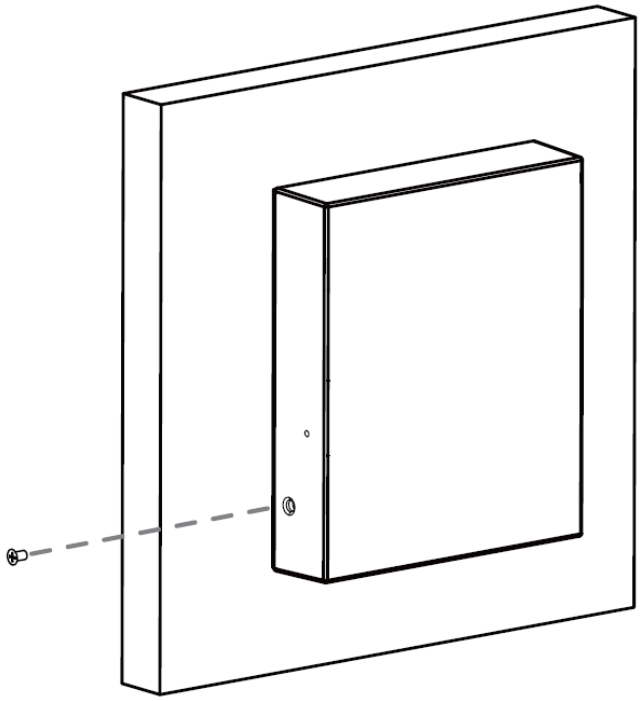
5. Insert the included bracket screw on the side of the access point to secure the device to the mounting bracket (one spare screw is included).