Registration Details

This form must be filled in, kept handy and produced with any warranty claim, together with the purchase invoice and/or receipt.

Name: _____

Address: _____

Authorized Dealer: _____

Purchase Date: _____

Vehicle Type: _____

Registration No: _____

Installers' Name: _____

Product Type: _____

Model No: _____

Steel mate®

Think about safety Think Steel mate

MODEL : PTS400Q

PARKING ASSISTANT SYSTEM

MANUFACTURED BY:

Steelmate Co., Ltd.

http: //www.globalsources.com/steelmate.co
E-mail: steelmate@globalsources.com
sales@steel-mate.com

PRI0023/A

Manual

Attentions

Misleading detection may occour due to the following cases:

Smooth sloping surface

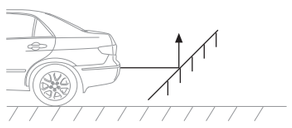

Smooth round object

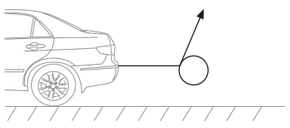

Items absorbing sound,e.g.cotton

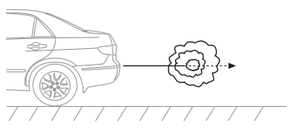

1.Heavy raln,dirty or damaged sensor could result in mlsleading detection.
2.Check if the system is in order before use.
3.Please replace the damaged sensor when the system detects it.
4.The product is a driver assistant device. No warranty as to operating efficiency and accident is guaranteed. It is not a substitute for the driver's responsibility when driving a vehicle.
5.Do not paint over the sensors as this will affect the performance.

The Digital Matrix LED Display:

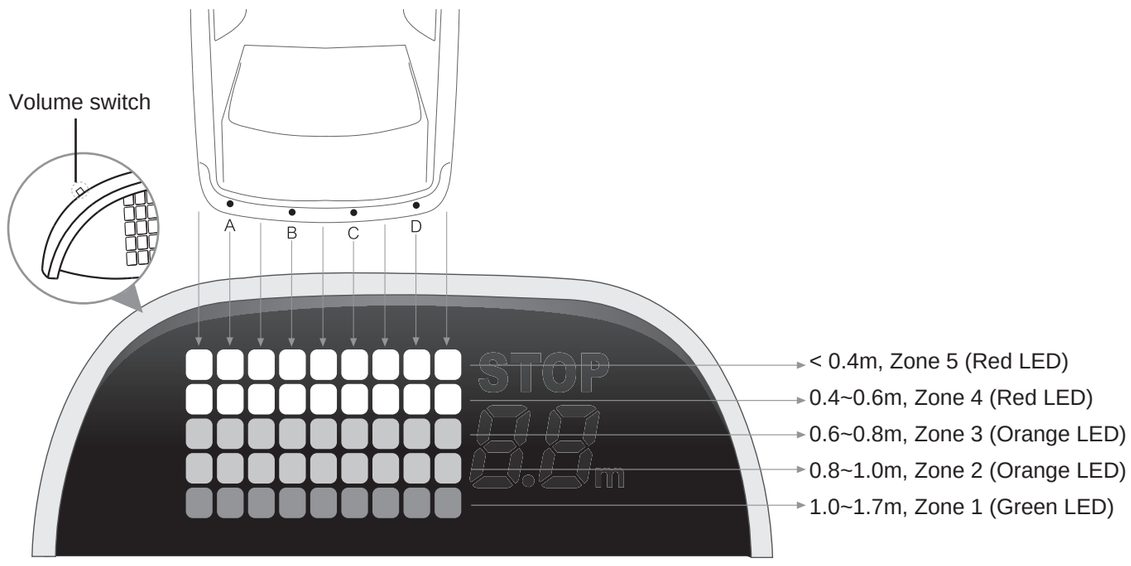

example 1

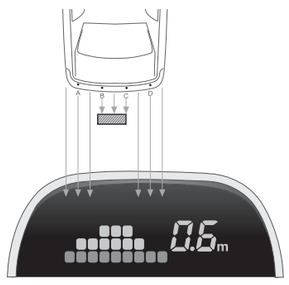

example 2

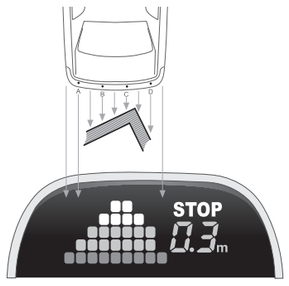

example 3

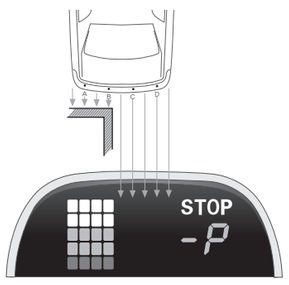

Display Installation

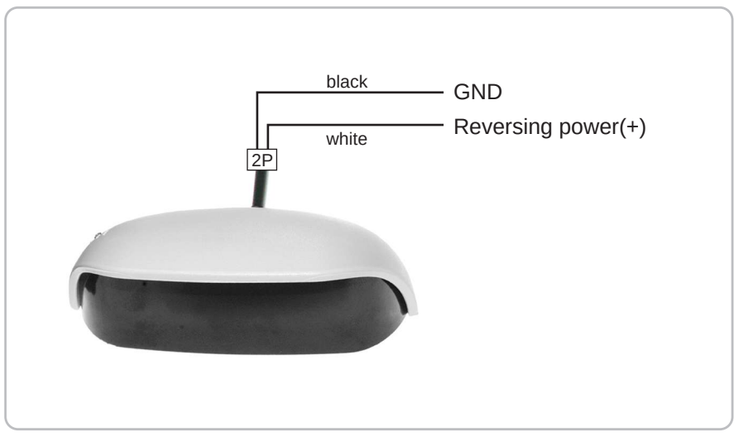

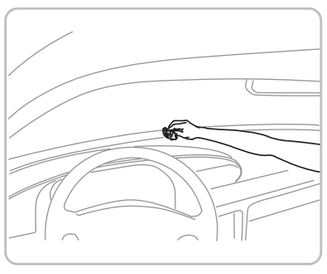

Clean the dash board for mouting the display.

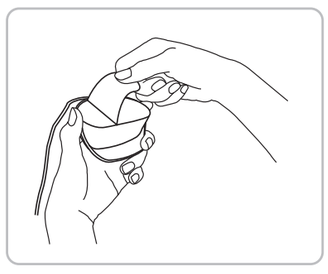

Take off the 3M sticker of the display.

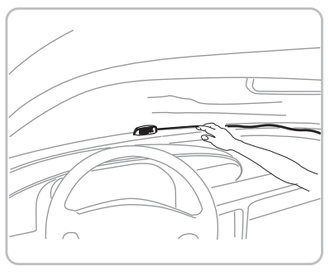

Mount the display on the dashboard firmly for the driver easy to see.

Digital Number Display + Audio Warning

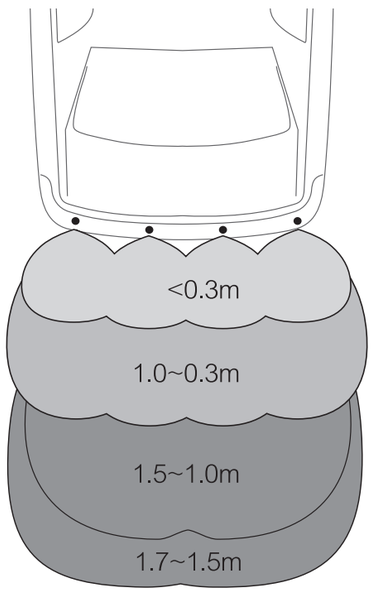

Audio warning	Distance on display	LED matrix display
Beeeeeeee——	-P	Zone 5
Beeeeep. Beeeeep. Beep... Beep... Bep..... Bep.....	1.7m~0.3m The digital number on display will show every 0.1M change of distance	Zone 5 Zone 4 Zone 3 Zone 2
No Beep		Zone 1

Important Notice

This parking assistant system is designed as a reversing aid. It is not a substitute of driver's responsibilities normally assumed when reversing. Steelmate does not liable for any damages caused by reversing only rely on this system. Proper driving skills, such as slow down, use of mirror or lookout etc. is always essential.

1. This unit is for vehicles with 12v DC only
2. It should be installed by a professional
3. Avoid high temperature and high voltage while laying out the wire harness
4. Wire connection point should be insulated
5. Conduct test after finishing the installation

Caution:

Changes or modifications to this unit not expressly approved by the party responsible for compliance will void the user's authority to operate the equipment. Any change to the equipment will void FCC grant.

NOTE:

This equipment has been tested and found to comply with the limits for a Class B digital device, pursuant to part 15 of the FCC Rules. These limits are designed to provide reasonable protection against harmful interference in a residential installation. This equipment generates, uses and can radiate radio frequency energy and, if not installed and used in accordance with the instructions, may cause harmful interference to radio communications. However, there is no guarantee that interference will not occur in a particular installation. If this equipment does cause harmful interference to radio or television reception, which can be determined by turning the equipment off and on, the user is encouraged to try to correct the interference by one or more of the following measures:
--Reorient or relocate the receiving antenna.
--Increase the separation between the equipment and receiver.
--Connect the equipment into an outlet on a circuit different from that to which the receiver is connected.
--Consult the dealer or an experienced radio/TV technician for help.
--This device complies with Part 15 of the FCC Rules. Operation is subject to the following two conditions: (1) this device may not cause harmful interference, and (2) this device must accept any interference received, including interference that may cause undesired operation.

About Parking Assistant System (PTS)

The parking assistant system is an ultrasonic distance monitoring system. It electronically detects the area behind your vehicle during reversing, and alerts you with audible tone and digital display if there is an object behind your car.

Every piece of our products has passed the most stringent test before releasing to the market. It is reliable at a wide temperature range (-40ûC ~ +80ûC) and becomes very useful when you are reversing at a raining day, snowing day or at night etc. With the help of Steelmate parking assistant system, you can enjoy a convenient and nervous - free reversing.

Features:
1. Detection distance: 0.30 ~ 1.79 m
2. No wire from ECU to display
3. Self-test function activated by reverse gear
4. 3 Colour matrix LED display shows the object's location
5. Anti-false alert technology
6. All weather design (-40ûC ~ +80ûC)
7. Easy installation
8. Volume control

Specifications:
a) Voltage: 12 V*3V
b) ECU working current: 35mA*5mA
c) Display working current: < 270mA
d) Buzzer: 70 ~ 90dB

Possible Causes And Solutions

1. No beep at power up or no LED light falshing
1).Is power wire connected to ECU correctly?
2).Verify the ground connection
3).Have you connected theÊcorrect reversing light wire?
Ê

2. False warning tone or false LED falshing
1).Is sensor mounted too low or pointing to the ground?
Ê

3.Sensors do not detect any objects
1).Are sensors properly plugged into the correct sockets?
Ê
If the problem persists, please follow these steps:
A. For consumers: Contact your dealer or nearby steelmate service center
B. For Installer or dealer:
1).Replace the ECU and re-check the system
2).Test the sensors withÊcertified ECU and using a flat wooden board
3).Plug the certified sensors into the ECU and re-check
4).Email your questions and we will reply ASAP.
Ê
More tech tips are available on our website: www.steel-mate.com

Warranty

I. The unit is warranted for a limited period from the date of purchase. In the event of any defect arising in the unit when you use it as per the instructions during the warranty period, the repair would be carried out free.
* It is required to show this Warranty Card when have the unit repaired.
* The model and series number on unit must be the same as the information in the Warranty Card.

II. This warranty is non-transferable and is automatically void if:
* The original purchaser has not completed the warranty card
* The unit's serial number is defaced, missing or altered
* The unit has been modified or used in a manner contrary to its intended purpose
* The unit has been damaged by accident, unreasonable use, neglect, improper service and installation.

III. The warranty does not cover damage to the unit caused by installation or removal of the unit.

Self-test Function

The system will test all the sensors when the reversing gear is engaged.
If all the sensors are normal, the system will beep once and the LED display will flash once.
If there is any problem with the sensors, the system will beep three times to indicate that one or more sensors have problems.

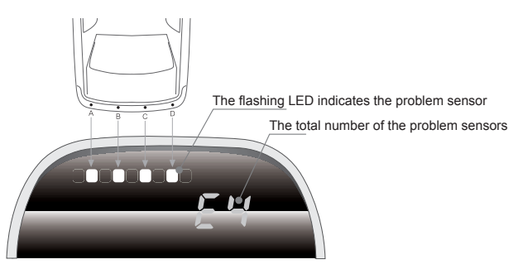

Sensor A has problem (E1: 1 problem sensor)

Sensor A,D have problem (E2: 2 problem sensors)

**Check the problem sensor or replace the damaged sensor.*

How Does The System Work

The system will test all the sensors when the reversing gear is engaged, and then the system detects objects.

a) The object distance is: >1.8m:

Zone 1 green LED of display will flash

b) The object distance is: 1.7~0.3m:

The display will show the distance by digital number and show the object's location in the matrix LED display.

c) The object distance is: <0.3m:

"-P" will be shown and "Stop" will flash on the display

Function Test After Installation

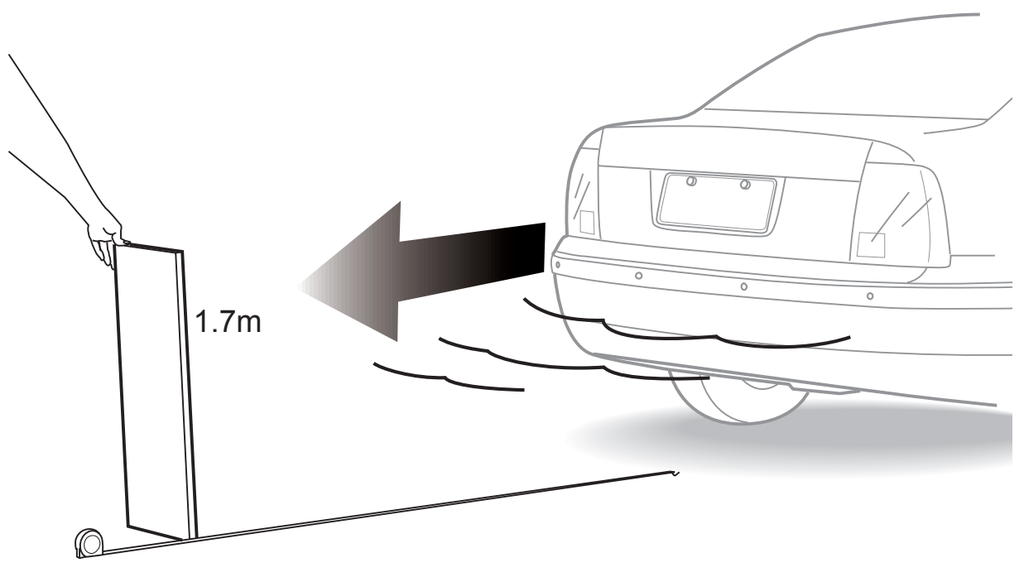

Testing the system features with a wooden plate (20cm wide x 100cm height) after the installation.

Installation Diagram

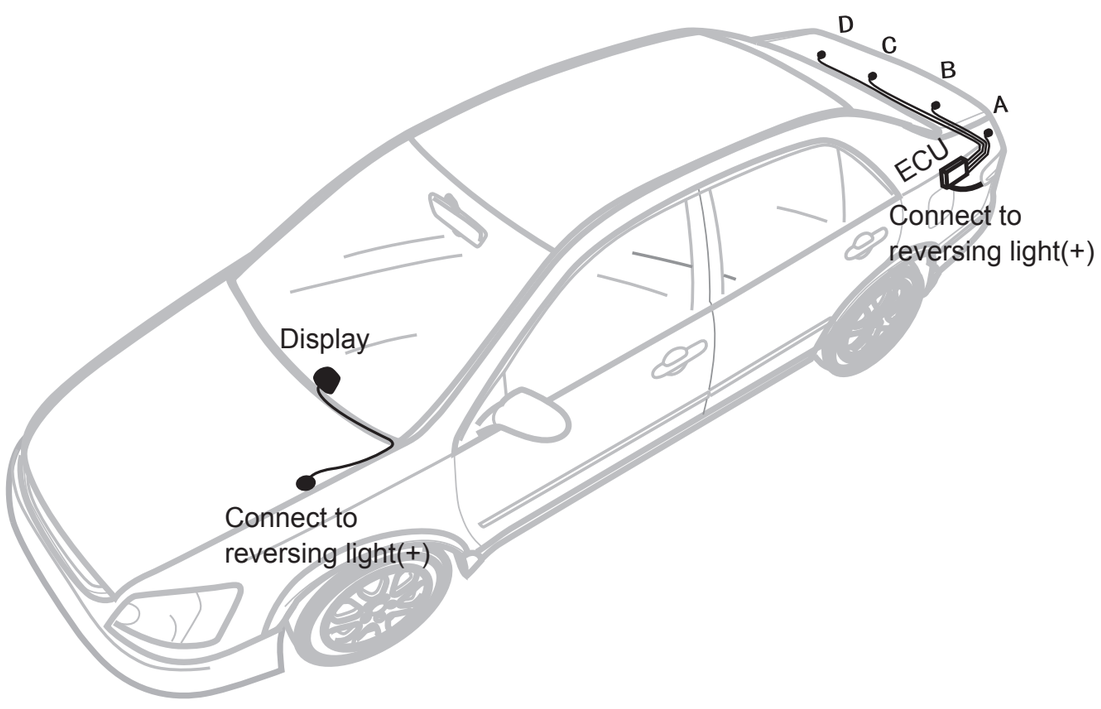

How To Install The Sensor

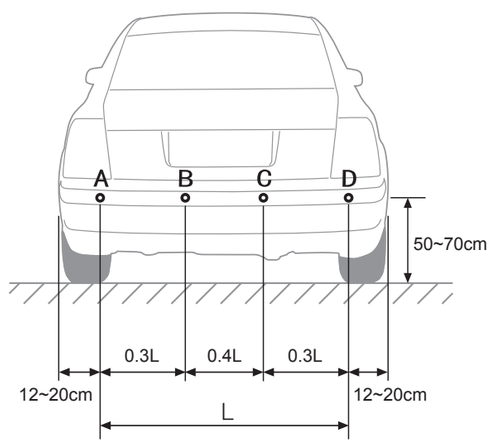

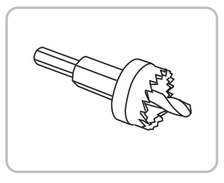

1. Check the size of the hole saw to be compatible to the diameter of the sensor.

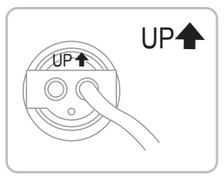

2. Install the sensor vertically, the "up" sign must be on upside.

ECU Installation

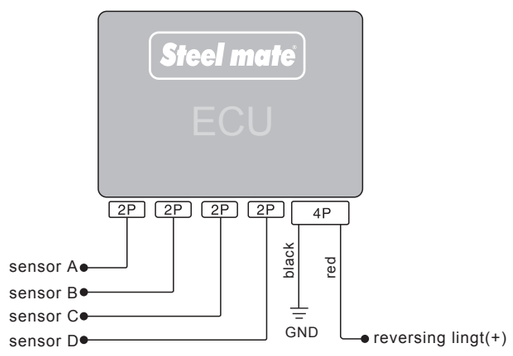

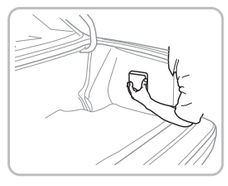

Mount ECU in trunk

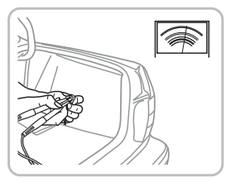

Connect the red wire to reversing light(+)