OMRON

INSTRUCTION MANUAL

HJ-327T

Alvita Wireless Activity Tracker

HJ-327T-ZG
9527561-8A

CONTENTS

Before Using

INTRODUCTION 1
IMPORTANT SAFETY INFORMATION 2
KNOW YOUR TRACKER 4
INSERTING THE BATTERY 5
CHANGING THE BATTERY COVER 6
OPTIONAL STRIDE LENGTH MEASUREMENT 7
PAIRING THE TRACKER WITH SMARTPHONE 8

Instructions

USING THE TRACKER 10
TRANSFERRING AND DELETING DATA ... 14

Maintenance

MAINTENANCE AND STORAGE 16
BATTERY REPLACEMENT 18
TROUBLESHOOTING 20
SPECIFICATIONS 24
FCC STATEMENT 26
LIMITED WARRANTY 28
DATA TRANSMISSION AND TRADEMARKS 30

INTRODUCTION

Thank you for purchasing the OMRON Alvita Wireless Activity Tracker (HJ-327T).
This Tracker features advanced 3D Smart Sensor technology - so it knows exactly when you're taking a step. You can easily track your progress by transferring your walking data from the Tracker to your smartphone. Use this tracker everyday to monitor your fitness achievements!
Your Tracker comes with the following components:

Activity Tracker
Battery (CR2032)
Clip
Spare battery cover
Coin shaped screwdriver
Quick Start Guide

Please read this instruction manual thoroughly before using the tracker.

IMPORTANT SAFETY INFORMATION

⚠ **Warning:** Improper use may result in death or serious injury.

- Contact your doctor or healthcare provider before beginning a weight reduction or exercise program.
- Keep the tracker out of the reach of young children. The tracker contains small pieces that may be swallowed. Immediately contact your physician if any piece is swallowed.
- If battery fluid gets in your eyes, on your skin or clothing immediately rinse with plenty of clean water. Contact a physician immediately.
- Do not put the tracker near (within 9 inch) implantable medical tracker such as pacemakers.
- In places where radio communications are prohibited, remove the tracker's battery to turn off the *Bluetooth*®.

go to next page

⚠ **Caution:** Improper use may result in minor or moderate injury to the user or damage to the equipment.

- Do not throw the battery into fire. The battery may explode.
- Always use the type of battery indicated.
- Do not immerse the tracker or any of the components in water. The tracker is not waterproof.
- Do not disassemble or modify the tracker.
- Remove the battery from this tracker if you are not going to use it for a long period of time (approximately three months or longer).
- Do not subject the tracker to strong shock such as dropping it on the ground.
- Do not put the tracker in the back pocket of your pants or skirt.
- Dispose of the tracker, battery, and components according to applicable local regulations. Unlawful disposal may cause environmental pollution.
- Do not place the tracker in direct contact with your skin if you have sensitive skin or the area where you place the tracker has numbness, swelling, eczema, skin irritation, a broken bone or an injury.

KNOW YOUR TRACKER

Main Tracker

Front

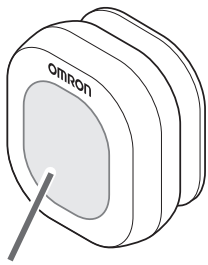

Display (touch screen)

Back

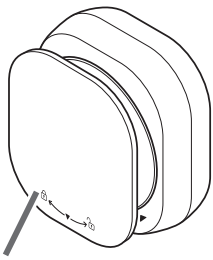

Clip

Display

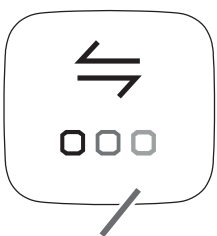

Data transfer indicator

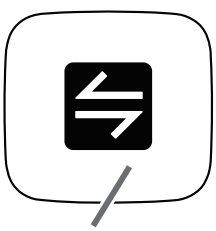

Measurement results transfer indicator

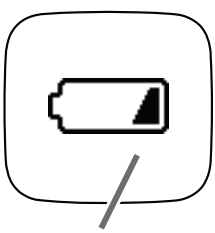

Low battery indicator

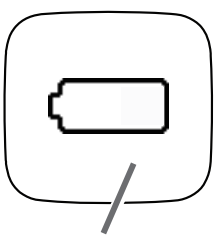

Exhausted battery indicator

Spare Battery Cover

Coin shaped screwdriver

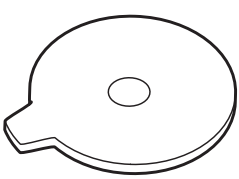

INSERTING THE BATTERY

1. Remove the battery cover from the tracker.

(1) Rotate the battery cover counter-clockwise.

(2) Lift the battery cover out of the tracker.

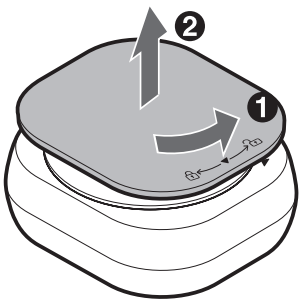

2. Insert the battery (CR2032) with the positive side (+) face up.

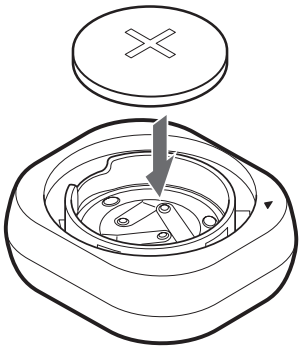

⚠ **Caution:**
Do not insert the battery with the polarities in the wrong direction.

3. Replace the battery cover.

(1) Align two ▼ marks and press the battery cover down.

(2) Rotate the cover clockwise.

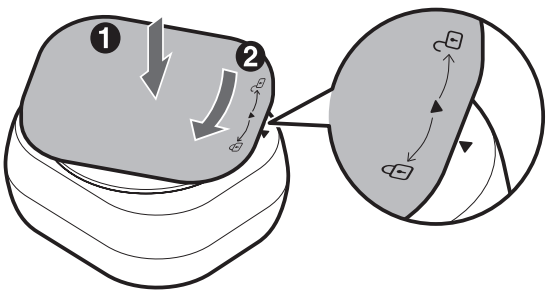

When ⇆ is displayed the tracker's screen, proceed to "PAIRING THE TRACKER WITH SMARTPHONE".

CHANGING THE BATTERY COVER

A battery cover with clip is attached to the tracker at the time of purchase. You can replace it with the spare battery cover depending on your needs.

Attach to the tracker

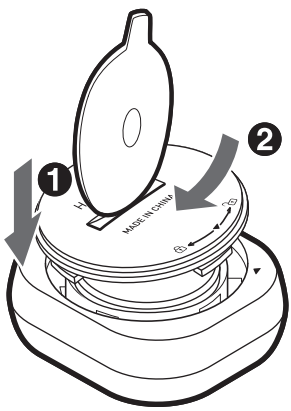

1. **Align the protrusion on the battery cover with the indent on the tracker.**
2. **Insert the coin shaped screwdriver into the groove of the battery cover.**
3. **Rotate the battery cover clockwise.**

Remove from the tracker

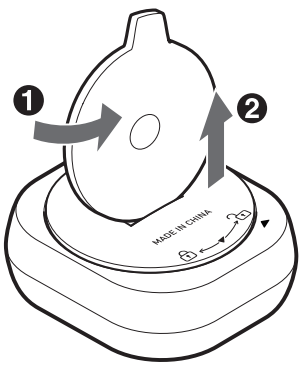

1. **Insert the coin shaped screwdriver into the groove of the battery cover.**
2. **Rotate the battery cover counter-clockwise.**
3. **Lift the battery cover out of the tracker.**

OPTIONAL STRIDE LENGTH MEASUREMENT

The initial stride length displayed on the app is an estimated value calculated by your height setting. You may choose to adjust your stride length by adding the new value in the app. For instructions on calculating your stride manually, please refer to the following instruction, and then entering the new value in the application.

How to measure your stride length

1. **Walk 10 steps with your normal stride as illustrated below.**

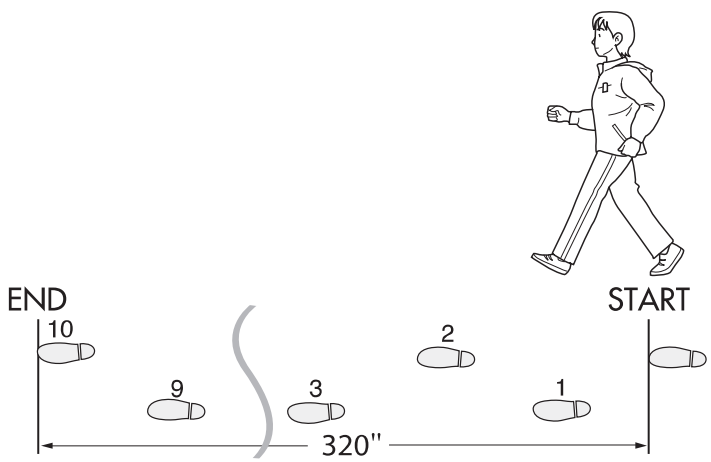

2. **Measure the distance from START to END in inches.**
3. **Calculate your stride length by dividing the total distance by 10.**

   Example:

   Total distance = 320"

   320 ÷ 10 = 32 inches (2 feet 8 inches)

   Conversion Chart

   12 inches = 1 foot
   24 inches = 2 feet
   36 inches = 3 feet
   48 inches = 4 feet

PAIRING THE TRACKER WITH SMARTPHONE

You will need to follow steps 1 to 4 when using the tracker for the first time.

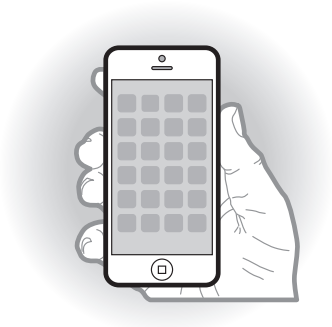

iPhone

Launching the application

1. **Turn on *Bluetooth*® on your iPhone.**
2. **Install the Omron Fitness app from the App Store.**

Download on the App Store

3. **Launch the app and follow the onscreen instructions.**

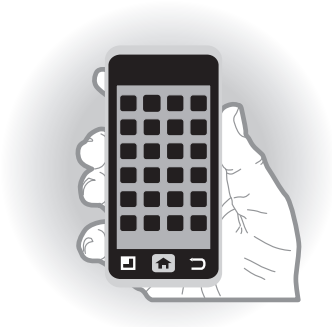

Android

Launching the application

1. **Turn on *Bluetooth*® on your Android smartphone.**
2. **Install the Omron Fitness app from Google Play.**

ANDROID APP ON Google play

3. **Launch the app and follow the onscreen instructions.**

Note:

If the initial settings are not correct, the measurement results may not be accurate.

go to next page

4. When "OK" is displayed on the tracker, all the settings are completed.

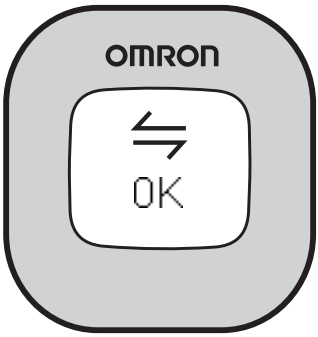

Note:

The tracker syncs with the following devices and applications:
iPhone® 4S+, iOS 7+
Samsung Galaxy S® III, S®4, S®5
Android™ V4.3+

USING THE TRACKER

How to wear

The tracker accurately counts in a pocket, bag, or just about anywhere you want to place it. The tracker may be placed in the upper front pocket of your shirt, pants, skirt, in a bag, or attached to a belt.

Note:
Before putting the tracker in your pocket make sure the display turns off, or the tracker may not count steps correctly.

The tracker may not count steps correctly in the following conditions:

1. The tracker moves irregularly

- The tracker is placed in or attached to a bag, and the bag moves irregularly.
- The tracker is attached to your wrist.

2. Walking at an inconsistent pace

- You shuffle or wear sandals.
- You constantly start and stop walking, or move at some other inconsistent pace.

3. Up and down movement

- You stand up and sit down.
- You play sports other than walking.
- You go up or down stairs or a steep slope.

go to next page

4. Vibrations from a moving vehicle

- You are on a bicycle, automobile, train or bus.

5. Walking extremely slowly

How to turn the tracker's display on and off

To turn on the tracker's display:
Shake the tracker 2 or 3 times in any direction to turn on the display. After shaking the tracker, it will take a moment for the screen to activate.

To turn off the tracker's display:
Touch the center of the tracker's display for 2 or 3 seconds to turn off the display. In addition, the screen will go blank after 20 seconds of inactivity so as to save battery life. Refer to "Battery saving mode" for more information.

How to turn off *Bluetooth*®

Bluetooth® is set "ON" as a default. To turn off *Bluetooth*®, please remove the tracker's battery.

Battery saving mode

The tracker contains a battery saving mode. This feature helps extend the battery life of the tracker. The tracker will continue tracking all indices even though the screen goes blank after 20 seconds inactivity or when touching the tracker's display for 2 to 3 seconds.

How to view your data

The tracker stores up to 14 days of data, but displays only the current day's data. Measurement results older than 14 days will be overwritten starting from the oldest first. If you want to save the data, transfer the data to your smartphone. (Refer to "TRANSFERRING AND DELETING DATA".)

1 Shake 2 or 3 times to turn on the tracker's display.

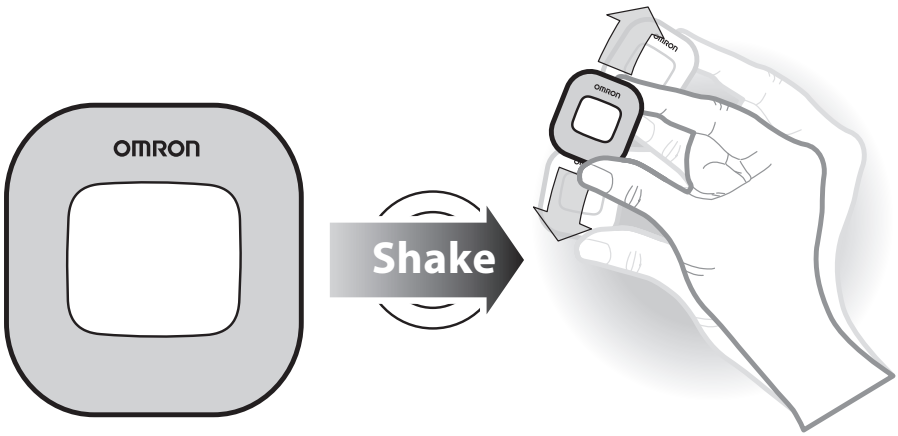

2 Touch the tracker's display with the tip of your index finger and press down for 1 or 2 seconds to view the different indices.

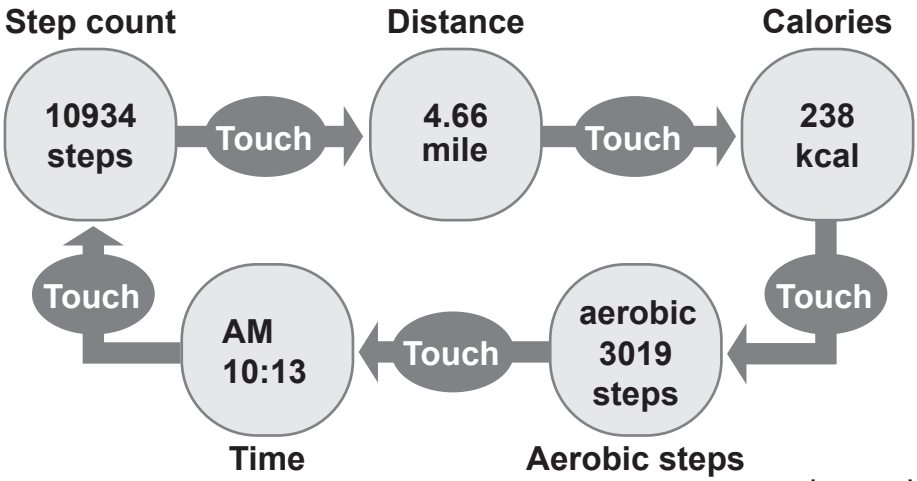

go to next page

Note:
Should be the palm of the hand or a flat and stabilized surface when the tracker won't work even if you touch it.

Aerobic steps
Aerobic steps are the physical exercise that help us stay healthy. Aerobic steps are counted separately when walking more than 60 steps per minute and more than 10 minutes successively. If a rest of less than 1 minute is taken after a continuous walk of more than 10 minutes, this will be regarded as part of "a continuous walk".

TRANSFERRING AND DELETING DATA

Transferring data

The tracker will always display the current days data. It will also store up to 14 days of data (which will not be visible on the tracker). In order to view previous results, you will need to transfer your data from the tracker to the app. Please follow these steps to transfer your data :

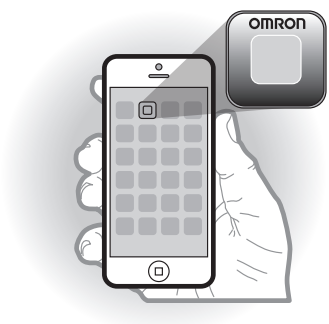

1. **Turn on *Bluetooth*® on your smartphone.**
2. **Open the app on your smartphone.**
3. **Shake the tracker to activate the display.**
   The data transfer starts automatically (within 10 meters).
4. **On the app either pull down at the top of the application, or on the dashboard, press and hold the synch symbol and the transfering of data will begin.**

go to next page

About the ⇆ indicator

When ⇆ blinks or is lit, transfer results immediately so you do not lose any data.
Blinking: 10-13 days of measurement results have been stored.
Lit:14 days of measurement results have been stored.
If the number of days exceeds 14, the oldest results are deleted first. Please transfer measurement results as soon as possible so data is not overwritten.

Deleting all results and settings

You are able to update and delete all personal data and measurement results on the tracker from app. Please refer to the app for instructions.

MAINTENANCE AND STORAGE

To keep the tracker in the best condition and protect the tracker from damage follow the directions listed below:

⚠ **Caution:**
Do not disassemble or modify the tracker. Changes or modifications not approved by Omron Healthcare will void the user warranty.

Clean the tracker with a soft dry cloth.
Do not use any abrasive or volatile cleaners.

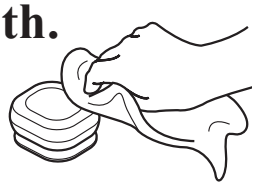

Do not immerse the tracker or any of the components in water.
The tracker is not waterproof. Do not wash it or touch it with wet hands. Be careful that water does not get into the tracker.

Store the tracker in a safe and dry location.
Avoid the tracker being exposed to direct sunlight, high temperatures, high humidity, water and/or dust.

Do not subject the tracker to strong shock, drop, or step on it.

go to next page

Replace a exhausted battery with a new one immediately.

Remove the battery if the tracker will not be used for three months or longer.

Use of the tracker must be consistent with the instructions provided in this manual.

BATTERY REPLACEMENT

When the low/exhausted battery indicator appears on the display, immediately replace the battery with a new CR2032 battery.

Low battery	Battery power is low.
Exhausted battery	Battery power is exhausted and the tracker stops measuring.

NOTE:
The supplied battery is for initial use. The battery life may be shorter.

IMPORTANT!:

- Do not remove the battery around 12:00AM (0:00). The measurement results of the day when the battery was removed will be added to the measurement results for the day the battery was inserted. (It is assumed that the battery will be removed and replaced with a new one on the same day.)
- After replacing the battery, you need to open the Omron Fitness app on your smartphone and retransfer your personal data from your smartphone to the tracker.

go to next page

Replacing the battery

1. Take off the battery cover.
2. Insert the protrusion of the coin shaped screwdriver into the gap to remove the battery.

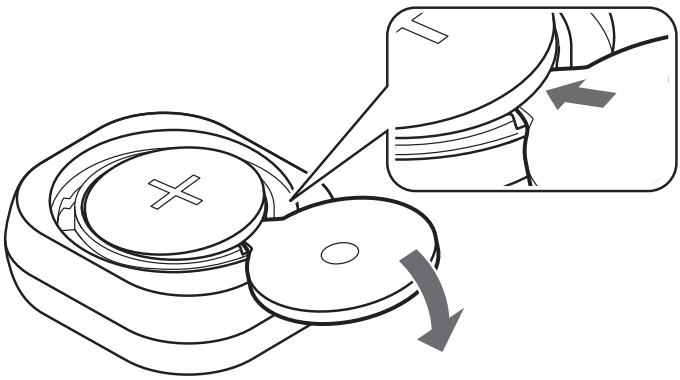

3. Insert a new CR2032 battery with the positive side (+) face up.

TROUBLESHOOTING

Problem	Probable Cause	How to Correct
/ is displayed	The battery is low/ exhausted.	Replace the battery with a new 3V CR2032 lithium battery. (Refer to “BATTERY REPLACEMENT”.)
Nothing is displayed.	Battery saving mode is active.	Refer to “Battery saving mode” in “USING THE TRACKER”.
	The polarities of the battery (+ and -) are aligned in the wrong directions.	Insert the battery in the correct alignment. (Refer to “INSERTING THE BATTERY”.)
	The battery is exhausted.	Replace the battery with a new 3V CR2032 lithium battery. (Refer to “BATTERY REPLACEMENT”.)
The “HELLO!” and ⇆ are alternately displayed.	The battery is low.	Replace the battery with a new 3V CR2032 lithium battery. (Refer to “BATTERY REPLACEMENT”.)

go to next page

Problem	Probable Cause	How to Correct
The displayed values are incorrect.	The tracker is positioned incorrectly.	Refer to “The tracker may not count steps correctly in the following conditions:” in “USING THE TRACKER”.
	Irregular movement. Inconsistent pace. Up and down movement.	
	The set values are wrong.	Check the settings on app.
The display is unusual or does not respond to touch.	The battery is low or exhausted.	Replace the battery with a new 3V CR2032 lithium battery. (Refer to “BATTERY REPLACEMENT”.)
⇆ ERR	Data communication error.	Try transferring the data again.

go to next page

Problem	Probable Cause	How to Correct
Data cannot be transferred.	Battery saving mode is active.	Refer to “Battery saving mode” in “USING THE TRACKER”.
	No app is installed on your smartphone or the installed app does not run.	Install or run the app.
	The tracker is not registered to the app.	Register the tracker to the app.
	Data has been transferred near an object that emits intense magnetic force or radio waves.	Try transferring the data in a location where radio waves are not present.
	The battery is low or exhausted.	Replace the battery with a new 3V CR2032 lithium battery. (Refer to “BATTERY REPLACEMENT”.)

go to next page

Problem	Probable Cause	How to Correct
Data cannot be transferred.	The tracker is too far from your smartphone.	Make sure that there is no obstacle between the tracker and your smartphone, and move them close to each other.
	The data communication with your smartphone seems abnormal.	Turn your smartphone off and on, and try to transfer the data again.

SPECIFICATIONS

Product Name	Alvita Wireless Activity Tracker
Type	HJ-327T
Power Supply	3VDC (1 lithium battery CR2032)
Battery Life	Approx. 3 months **NOTE:** The supplied battery is for initial use. This battery can run out within 3 months. (Based on OMRON testing)
Measurement Range	Tracks Steps: 0 to 99,999 steps Distance walked: 0.0 to 621.3 miles Time: 12:00 AM to 11:59 PM Activity calories: 0 to 59,999 kcal Aerobic steps: 0 to 99,999 steps
IT Function	*Bluetooth® Smart* technology
Memory Capacity	Previous 14 days (current day on display)
Setting Range	These items cannot be set from the tracker. Information registered to the app can automatically transfers to the tracker. Time: 12:00 AM to 11:59 PM Weight: 22 to 300 lb (in increments of 1 lb) Height: 3' 4" to 6' 6" (in increments of 1 inch) Stride length: 12" to 48" (in increments of 1 inch)

go to next page

Operating Temperature/ Humidity	14°F to 104°F / 30 to 85% RH
External Dimensions	Approx. 1 1/4"(w) × 1 2/5"(h) × 7/10"(d) (including the clip)
Weight	Approx. 0.5oz (including the clip)
Contents	Tracker, 3V CR2032 lithium battery, clip, spare battery cover, coin shaped screwdriver and Quick Start Guide

Specifications are subject to change without notice.

FCC STATEMENT

FCC CAUTION

Changes or modifications not expressly approved by the party responsible for compliance could void the user's authority to operate the equipment.

This device complies with part 15 of the FCC Rules. Operation is subject to the following two conditions:
(1) This device may not cause harmful interference,
and (2) this device must accept any interference received, including interference that may cause undesired operation.

Note: This equipment has been tested and found to comply with the limits for a Class B digital device, pursuant to part 15 of the FCC Rules. These limits are designed to provide reasonable protection against harmful interference in a residential installation. This equipment generates, uses and can radiate radio frequency energy, and if not installed and used in accordance with the instructions, may cause harmful interference to radio communications. However,there is no guarantee that interference will not occur in a particular installation. If this equipment does cause harmful interference to radio or television reception, which can be determined by turning the equipment off and on,the user is encouraged to try to correct the interference by one or more of the following measures:

- Reorient or relocate the receiving antenna.
- Increase the separation between the equipment and receiver.
- Connect the equipment into an outlet on a circuit different from that to which the receiver is connected.
- Consult the dealer or an experienced radio/TV technician for help.

go to next page

This transmitter must not be co-located or operated in conjunction with any other antenna or transmitter.
This equipment complies with FCC radiation exposure limits set forth for an uncontrolled environment and meets the FCC radio frequency (RF) Exposure Guidelines. This equipment has very low levels of RF energy that are deemed to comply without testing of specific absorption ratio (SAR).

FCC ID :Q6ZHJ327T
(FCC ID is listed in the battery holder.)

LIMITED WARRANTY

Your HJ-327T Alvita Wireless Activity Tracker, excluding the battery, is warranted to be free from defects in materials and workmanship appearing within 1 year from the date of purchase, when used in accordance with the instructions provided with the tracker. The above warranties extend only to the original retail purchaser.

We will, at our option, repair or replace without charge any Pedometer covered by the above warranties.Repair or replacement is our only responsibility and your only remedy under the above warranties.

To obtain warranty service contact Omron's Customer Support at 1-800-634-4350. Information for warranty service is available on our website at: www.omronfitness.com.

Enclose the Proof of Purchase. Include a letter, with your name, address, phone number, and description of the specific problem. Pack the product carefully to prevent damage in transit. Because of possible loss in transit, we recommend insuring the product with return receipt requested.

go to next page

THE FOREGOING IS THE SOLE WARRANTY PROVIDED BY OMRON IN CONNECTION WITH THIS PRODUCT, AND OMRON HEREBY DISCLAIMS ANY OTHER WARRANTIES, EXPRESS OR IMPLIED, INCLUDING IMPLIED WARRANTIES OF MERCHANTABILITY AND FITNESS FOR A PARTICULAR PURPOSE. IMPLIED WARRANTIES AND OTHER TERMS THAT MAY BE IMPOSED BY LAW, IF ANY, ARE LIMITED IN DURATION TO THE PERIOD OF THE ABOVE EXPRESS WARRANTY.

OMRON SHALL NOT BE LIABLE FOR LOSS OF USE OR ANY OTHER SPECIAL, INCIDENTAL, CONSEQUENTIAL OR INDIRECT COSTS, EXPENSES OR DAMAGES.

This warranty provides you with specific legal rights, and you may have other rights that which vary from state to state. Some states do not allow limitations on how long an implied warranty lasts, so the above limitation may not apply to you. Some states do not allow the exclusion or limitation of incidental or consequential damages, so the above limitation or exclusion may not apply to you.

FOR CUSTOMER SERVICE

Visit our web site at: www.omronfitness.com
Call toll free: 1-800-634-4350

DATA TRANSMISSION AND TRADEMARKS

- This Product operates in the unlicensed ISM band at 2.4GHz. In case this Product is used around the other wireless devices including microwave and wireless LAN, which operate same frequency band of this Product, there is a possibility that interference occurs between this Product and such other devices. If such interference occurs, please stop the operation of other devices or relocate this Product before using this Product or do not use this Product around the other wireless devices.
- Due to the use of radio waves, third parties may intercept transmissions either deliberately or accidentally. Do not use this Product for matters related to vital secrets or human lives.

The *Bluetooth® Smart* word mark and logos are registered trademarks owned by Bluetooth SIG, Inc. and any use of such marks by OMRON HEALTHCARE Co., Ltd. is under license. Other trademarks and trade names are those of their respective owners.

Apple and the Apple logo are trademarks of Apple Inc., registered in the U.S. and other countries.
App Store is a service mark of Apple Inc.
Android and Google Play are both trademarks of Google Inc.
Samsung and Galaxy S are both registered trademarks of Samsung Electronics Co., Ltd.

OMRON HEALTHCARE, INC.
1925 West Field Court
Lake Forest, IL 60045 U.S.A.
www.omronhealthcare.com
© 2014 OMRON
HEALTHCARE, INC.
Made in China