ZXC10 CBTS

CDMA2000 Compact Base Transceiver Station

Installation Manual

ZTE CORPORATION
ZTE Plaza, Keji Road South,
Hi-Tech Industrial Park,
Nanshan District, Shenzhen,
P. R. China
518057
Tel: (86) 755 26771900 800-9830-9830
Fax: (86) 755 26772236
URL: http://support.zte.com.cn
E-mail: doc@zte.com.cn

LEGAL INFORMATION

Copyright © 2005 ZTE CORPORATION.

The contents of this document are protected by copyright laws and international treaties. Any reproduction or distribution of this document or any portion of this document, in any form by any means, without the prior written consent of ZTE CORPORATION is prohibited. Additionally, the contents of this document are protected by contractual confidentiality obligations.

All company, brand and product names are trade or service marks, or registered trade or service marks, of ZTE CORPORATION or of their respective owners.

This document is provided "as is", and all express, implied, or statutory warranties, representations or conditions are disclaimed, including without limitation any implied warranty of merchantability, fitness for a particular purpose, title or non-infringement. ZTE CORPORATION and its licensors shall not be liable for damages resulting from the use of or reliance on the information contained herein.

ZTE CORPORATION or its licensors may have current or pending intellectual property rights or applications covering the subject matter of this document. Except as expressly provided in any written license between ZTE CORPORATION and its licensee, the user of this document shall not acquire any license to the subject matter herein.

The contents of this document and all policies of ZTE CORPORATION, including without limitation policies related to support or training are subject to change without notice.

Revision History

Date	Revision No.	Serial No.	Description
04/04/2006	R1.0	sjzl20060563	CDMA2000 Compact Base Transceiver Station - English Contents

ZTE CORPORATION
Values Your Comments & Suggestions!

Your opinion is of great value and will help us improve the quality of our product documentation and offer better services to our customers.

Please fax to: (86) 755-26772236; or mail to Publications R&D Department, ZTE CORPORATION, ZTE Plaza, A Wing, Keji Road South, Hi-Tech Industrial Park, Shenzhen, P. R. China 518057.

Thank you for your cooperation!

Document Name	ZXC10 CBTS CDMA2000 Compact Base Transceiver Station Installation Manual		
Product Version		Document Revision Number	
Equipment Installation Date			
Your evaluation of this documentation	**Presentation:** (Introductions, Procedures, Illustrations, Completeness, Level of Detail, Organization, Appearance) ☐ Good ☐ Fair ☐ Average ☐ Poor ☐ Bad ☐ N/A		
	Accessibility: (Contents, Index, Headings, Numbering, Glossary) ☐ Good ☐ Fair ☐ Average ☐ Poor ☐ Bad ☐ N/A		
	Intelligibility: (Language, Vocabulary, Readability & Clarity, Technical Accuracy, Content) ☐ Good ☐ Fair ☐ Average ☐ Poor ☐ Bad ☐ N/A		
Your suggestions for improvement of this documentation	**Please check the suggestions which you feel can improve this documentation:** ☐ Improve the overview/introduction ☐ Make it more concise/brief ☐ Improve the Contents ☐ Add more step-by-step procedures/tutorials ☐ Improve the organization ☐ Add more troubleshooting information ☐ Include more figures ☐ Make it less technical ☐ Add more examples ☐ Add more/better quick reference aids ☐ Add more detail ☐ Improve the index ☐ Other suggestions _____ _____ _____ _____ _____ # Please feel free to write any comments on an attached sheet.		
If you wish to be contacted regarding your comments, please complete the following:			
Name		Company	
Postcode		Address	
Telephone		E-mail	

This page is intentionally blank.

Contents

About this Manual xi
Purpose of this Manual xi
Typographical Conventions xi
Mouse Operation Conventions xii
Safety Signs xiii
How to Get in Touch xiv
Customer Support xiv
Documentation Support xiv
Chapter 1 15
Installation Preparation 15
Hardware Installation Flow 16
CBTS Installation Precautions 17
Environment Inspections 17
Installation Location Specifications 17
Temperature and Humidity Range 17
Power Supply Requirements 18
Electromagnetic Radiation Protection 18
Antenna Feeder System Requirements 18
Other Accessory Devices 19
Tool and Meter List for Installation 19
Technical Documentation Preparation 21
Project Commissioning Documents 21
Acceptance Reports 21
Reference Documents 21
Chapter 2 23
Unpacking and Handover 23
Checking Equipment List 24
Unpacking Wooden Box 25
Unpacking Procedure 25
Checking Cabinet 26
Unpacking Carton 26
Carton Structure 26

Unpacking Procedure 26
Unpacking Precautions 27
Checking Boards 27
Acceptance and Handover 27

Chapter 3 29

Cabinet Installation 29

Cabinet Structure 30
Cabinet Installation Precautions 31
Installation Location Specification 31
Cabinet Installation Modes 32
Direct Installation Mode 33
Direct Installation Mode Flow 33
Direct Installation Mode Procedure 34
Adjustable Base Installation Mode 39
Adjustable Base Structure 40
Adjustable Base Installation Mode Flow 41
Adjustable Base Installation Procedure 42
Cabinet Accessories Installation 48
Cabling Runway 48
CBTS Cabinet Interfaces 49
Power Interface 50
Feeder Cable Interface 50
E1/T1 Interfaces 51
FE Interfaces 51
Room Monitoring Interface 52
Order Wire Phone Interface 52
Power Monitoring Interface 53
External BDS Interface 53
External Monitoring Interface 54
GPS Interface 54

Chapter 4 55

Cable Installation 55

Power and Grounding Cables 56
Power Cable Types 56
Power Cable Preparation 56
Power and Grounding Cable Connections 57
Cable Installation Requirements 58
Trunk Cable Installation 60
T1 Cable Installation 60
E1 Cable Installation 61

Trunk Cable Processing 64
Trunk Cable Conversion 66
E1/T1 Cable Installation Requirements 68
Feeder cable installation 69

Chapter 5 71

Monitoring System Installation 71

Smog Sensor Installation 72
Installation Procedure 72
Terminal Connections 73
Temperature and Humidity Sensor Installation 73
Installation Procedure 73
Terminal Connections 75
Installation Precautions 75
Infrared Sensor Installation 75
External Monitoring Cable Installation 77

Chapter 6 79

Main Antenna Feeder System Installation 79

Main Antenna System Installation 80
Antenna Installation Preparation 80
Antenna Installation Precautions 80
Main Antenna Feeder System Structure 80
Antenna Installation Technical Parameters 82
Antenna Installation Flow Chart 83
Selecting Installation Position 83
Moving and Hoisting Antenna 83
Uni-Directional Antenna Installation 85
Omni-Directional Antenna Installation 87
Main Feeder Installation 88
Feeder Window Installation 89
Feeder Connector Preparation 90
Feeder Cutting 93
Jumper Installation 93
Waterproofing Joints 94
Feeder Grounding Clip Installation 95
Routing Feeders 96
Hoisting Feeders to Tower 97
CBTS Grounding System 99
Grounding Principles 100
Grounding Copper Busbar Installation 100
Lightning Arrester Installation 101

Routing Feeders into Equipment Room 102

Chapter 7 105

GPS Antenna Feeder System Installation 105

GPS Antenna Feeder System Structure 106

Installation Position and Requirements 107

Installation Requirements 108

Lightning Protection Requirements 109

NJ-9 Connector Preparation 109

NJ-9 Connector 109

Connector Preparation Procedure 110

GPS Connector Installation check 115

Chapter 8 117

Board Installation 117

Installation Flow Chart 118

Installation Procedure and Precautions 119

CTSB Board Slot 119

RFS Board Installation 120

BDS Board Installation 121

Installation Precautions 122

Chapter 9 123

Hardware Installation Check 123

Cabinet Installation Check 124

Cabling Rack Installation Check 124

Cable Installation Check 125

Power and Grounding Cables 125

Trunk and RF Cables 126

Board and Sensor Installation Check 126

Antenna and GPS Feeder System Installation Check 127

1/2" Indoor Jumper 127

Lightning arrester 127

Main GPS Feeder 127

Feeder Window and Waterproof Curve 128

Three – Way Feeder Clamp 128

1/2" Outdoor Jumper 129

Antenna 129

Feeder SWR 130

Environment Check 130

Chapter 10 131

Power On and Off Mechanism 131

Power Supply Inspection 132
Power-on Procedure 133
First Time Power-on 133
Normal Power-on 133
Power-off Procedure 133

Appendix A 135

Packing, Storage and Transportation 135

Packaging 136
Cabinet packing 136
Cabinet Packing Procedure 137
Board Packing 139
Board packing procedure 139
Base Packing 144
Engineering Materials Packing 144
Transportation 144
Storage 145

Appendix B 147

SiteMaster Usage 147

Frequency Range Selection 148
SiteMaster Check 148
Feeder Input Parameters 148
Tester Installation 149
Measuring SWR 149
Measuring DTF 150

Appendix C 151

Cabinet Working Modes 151

Appendix D 153

Monitoring Cables Definition 153

Acronyms 157

Figures 159

Tables 163

Index 165

This page is intentionally blank.

About this Manual

Purpose of this Manual

This manual describes ZXC10 Compact Base Transceiver Station hardware installation.

Typographical Conventions

ZTE documents employ the following typographical conventions.

TABLE 1 - TYPOGRAPHICAL CONVENTIONS

Typeface	Meaning
Italics	References to other guides and documents.
"Quotes"	Links on screens.
Bold	Menus, menu options, input fields, radio button names, check boxes, drop-down lists, dialog box names, window names
Bold, with first letter capitalized	Keys on the keyboard and buttons on screens
`Constant width`	Text that you type, program code, files and directory names, and function names
[ ]	Optional parameters
{ }	Mandatory parameters
|	Select one of the parameters that are delimited by it
	Note: Provides additional information about a certain topic.
	Checkpoint: Indicates that a particular step needs to be checked before proceeding further.
	Tip: Indicates a suggestion or hint to make things easier or more productive for the reader.

Mouse Operation Conventions

TABLE 2 - MOUSE OPERATION CONVENTIONS

Typeface	Meaning
Click	Refers to clicking the primary mouse button (usually the left mouse button) once.
Double-click	Refers to quickly clicking the primary mouse button (usually the left mouse button) twice.
Right-click	Refers to clicking the secondary mouse button (usually the right mouse button) once.
Drag	Refers to pressing and holding a mouse button and moving the mouse.

Safety Signs

TABLE 3 - SAFETY SIGNS

Safety Signs	Meaning
	Danger: Indicates an imminently hazardous situation, which if not avoided, will result in death or serious injury. This signal word should be limited to only extreme situations.
	Warning: Indicates a potentially hazardous situation, which if not avoided, could result in death or serious injury.
	Caution: Indicates a potentially hazardous situation, which if not avoided, could result in minor or moderate injury. It may also be used to alert against unsafe practices.
	Note: Indicates a potentially hazardous situation, which if not avoided, could result in injuries, equipment damage or interruption of services.
	Erosion: Beware of erosion.
	Electric shock: There is a risk of electric shock.
	Electrostatic: The device may be sensitive to static electricity.
	Microwave: Beware of strong electromagnetic field.
	Laser: Beware of strong laser beam.
	No flammables: No flammables can be stored.
	No touching: Do not touch.
	No smoking: Smoking is forbidden.

How to Get in Touch

The following section provides information on how to obtain support for the documentation and the software.

Customer Support

If you have problems, questions, comments, or suggestions regarding your product, contact us by e-mail at support@zte.com.cn. You can also call our customer support center at (86) 755 26771900 and (86) 800-9830-9830.

Documentation Support

ZTE welcomes your comments and suggestions on the quality and usefulness of this document. For further questions, comments, or suggestions on the documentation, you can contact us by e-mail at doc@zte.com.cn; or you can fax your comments and suggestions to (86) 755 26772236. You can also explore our website at http://support.zte.com.cn, which contains various interesting subjects like documentation, knowledge base, forum and service request.

FCC STATEMENT

Before using this CDMA ZXC10 CBTS I28A and CBTS I219, read this important RF energy awareness and control information and operational instructions to ensure compliance with the FCC RF exposure guidelines.

NOTICE: Working with the equipment while in operation, may expose the technician to RF electromagnetic fields that exceed FCC rules for human exposure. Visit the FCC website at www.fcc.gov/oet/rfsafety to learn more about the effects of exposure to RF electromagnetic fields.

Changes or modifications to this unit not expressly approved by the party responsible for compliance will void the user's authority to operate the equipment. Any change to the equipment will void FCC grant.

This equipment has been tested and found to comply with the limits for a Class A digital device, pursuant to the FCC Rules. This equipment generates, uses and can radiate radio frequency energy and, if not installed and used in accordance with the instructions, may cause harmful interference to radio communications. However, there is no guarantee that interference will not occur in a particular installation.

Chapter 1

Installation Preparation

This chapter describes:

- Hardware installation flow
- CBTS installation precautions
- Environment inspections
  - Installation location specifications
  - Temperature and humidity requirements
  - Power supply requirements
  - Electromagnetic radiation protection
  - Antenna feeder system requirements
  - Other accessory devices
- Tool and meter list for installation
- Technical documentation preparation
  - Project commissioning documents
  - Acceptance reports
  - Reference documents

Hardware Installation Flow

Figure 1 shows ZXC10 Compact Base Transceiver Station (CBTS) hardware installation flow.

FIGURE 1 - HARDWARE INSTALLATION FLOW

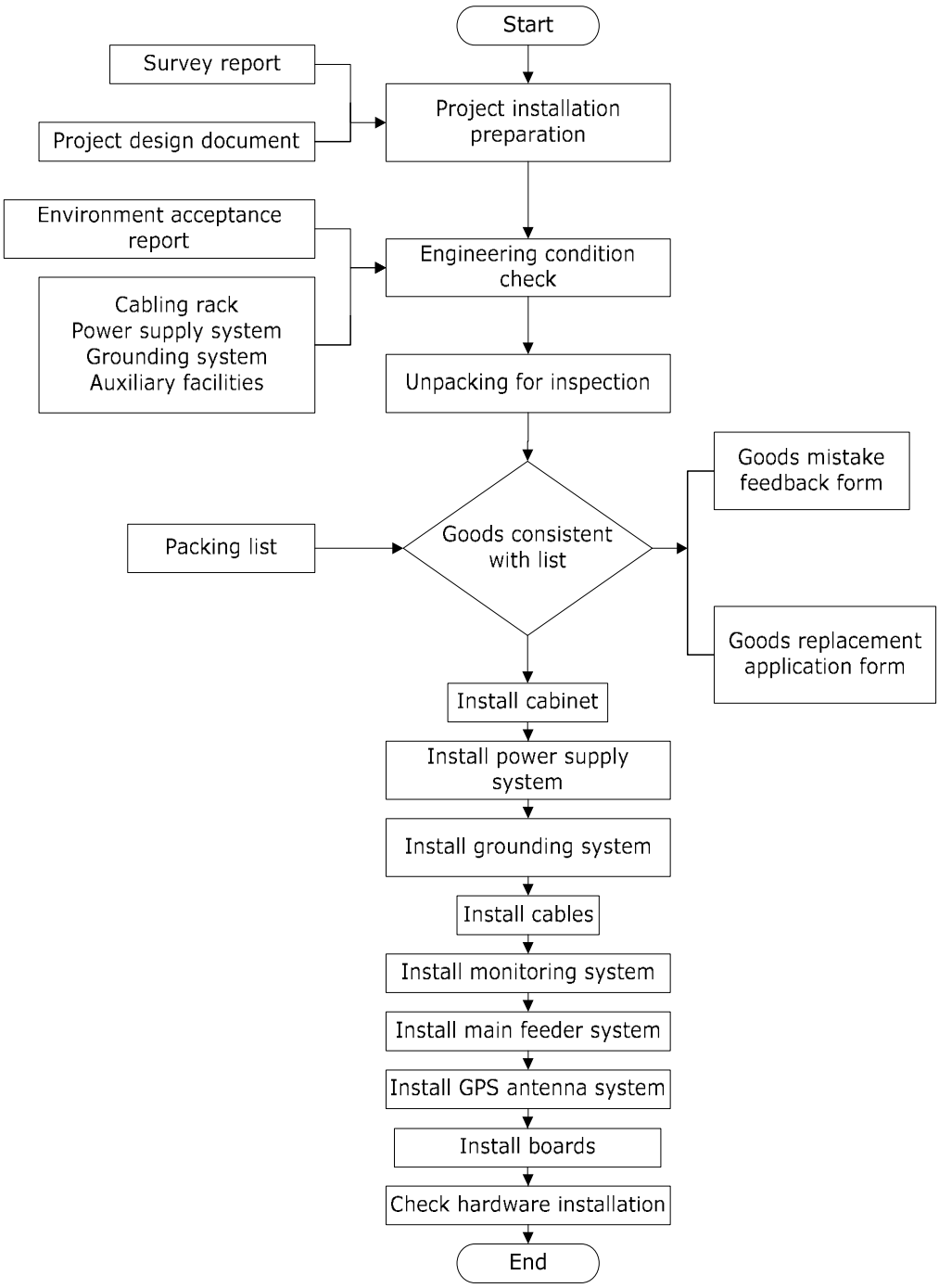

CBTS Installation Precautions

Take following precautions during CBTS installation.

- Avoid hot swap during board installation.
- Never install antenna feeder system in case of lightning.
- Check that lightening arresters are in proper contact. Replace damaged arresters immediately.

Environment Inspections

Before installation, the operator should finalize and prepare installation location, arrange power supply and grounding cables, and provide necessary facilities for installation.

Installation Location Specifications

Installation location must fulfill the engineering requirements. Table 4 lists equipment room basic requirements.

TABLE 4 - INSTALLATION LOCATION SPECIFICATIONS

Item	Requirements
Space	Keep an extra space for future expansion
Doors and windows	Ensure doors and windows are dust proof
Floor bearing	Keep floor bearing capacity greater than 450 kg/m^2
Air conditioning	Ensure air-conditioning facilities are available to maintain required temperature and humidity
Anti-seismic design	Design equipment room to overcome anti-seismic factor
Grounding	Install lightning arrester and proper grounding equipment to avoid any damage due to short circuits

Temperature and Humidity Range

Table 5 shows CBTS temperature and humidity range.

TABLE 5 - TEMPERATURE AND HUMIDITY RANGE

Item	Working range	Recommended range
Temperature	-5 °C ~ +45 °C	+15 °C ~ +35 °C
Humidity	15% RH ~ 93% RH	40% RH ~ 60% RH

Power Supply Requirements

Table 6 illustrates ZXC10 CBTS power supply requirements under normal operation.

TABLE 6 - POWER SUPPLY INDICES

Indices Name		Index Requirements
DC power supply	Power system range	-48 V power supply in range of -43.2 V ~ -56.5 V
	Power noise level	Satisfies Ministry of Post and Telecom technical specifications
	Power protection	Includes Over-voltage/Over-current protection and indication
AC power supply	Power system range	110 V power supply in range of 85 V ~ 135 V
		220 V power supply in range of 150 V ~ 300 V
	Power noise level	Satisfies Ministry of Post and Telecom technical specifications
	Power protection	Includes Over-voltage/Over-current protection and indication

Electromagnetic Radiation Protection

Table 7 shows electromagnetic radiation protection requirements.

TABLE 7 - RADIATION PROTECTION REQUIREMENTS

Item	Requirements
Public exposure	In 24 hours of a day, average value of electromagnetic power density (in six consecutive minutes) should be less than 0.4 W/m^2 (30 MHz ~ 3000 MHz)
Professional radiation	In 8 hours of a day, average value of electromagnetic power density (in six consecutive minutes) should be less than 2 W/m^2 (30 MHz ~ 3000 MHz)

Antenna Feeder System Requirements

Check whether following items comply with CBTS requirements and project design.

- Height and dimensions of feeder window
- Height, weight bearing and grounding of outdoor cable rack
- Height, weight bearing and grounding of indoor cable rack
- Height, diameter, weight bearing, wind resisting, grounding, lightning protection, and direction of antenna installation pole of building BS
- Height, diameter, weight bearing, wind resisting, grounding, lightning protection, and direction of antenna installation pole of iron tower BS

Other Accessory Devices

According to requirements in the contract, check whether following items are available:

- Cables for external power supply and cabinet
- E1 cable connecting CBTS and BSC
- Fire extinguisher

Tool and Meter List for Installation

Table 8 shows tools and meters list required during installation.

TABLE 8 - TOOL AND METER LIST

Category	Name
Special-purpose tools	One feeder connector knife One wire stripper for 75 Ω coaxial cables One crimping pliers for 75 Ω coaxial cables One multi-functional crimping pliers One multimeter One SiteMaster VSWR tester Earth resistance tester
Concrete drilling tools	One electric percussion drill Auxiliary and sample bits One vacuum cleaner Power socket (two-phase and three-phase socket, with current capacity greater than 15 A)
General-purpose tools	Cross screwdrivers (4”, 6” and 8” each) Flathead screwdrivers (4”, 6” and 8” each) Adjustable wrenches (6’, 8’, 10’ and 12’) Dual-purpose spanners (17” and 19” each) One set of socket wrench 11.02 lb (5 kg) nail hammer One 300 W iron One 40 W iron Solder wires

Category	Name
Measurement tools	One 50 m tape measure One 5 m steel tape One 400 mm level bar One angle meter One compass Plumb
Protection tools	Antistatic wrist strap Safety helmet Pair of gloves
Small tools	One hacksaw (with several saw blades) One pair of sharp-nose pliers (8”) One pair of diagonal pliers (8”) One pair of slip joint pliers (8") One pair of vices (8”) One needle file set (medium sized) Tweezers One paintbrush One pair of scissors One hot blower One solder sucker One pair of hydraulic pliers Crowbar
Auxiliary tools	Pulley block Rope Ladder Forklift
Meter	Spectrum analyzer SITE MASTER BS tester Qualcomm test MS Compass Multimeter Field strength tester

Note:

- Do not use meters unless they are strictly calibrated and proven qualified.

Technical Documentation Preparation

Project Commissioning Documents

Prepare following technical documents for equipment commissioning

- Project Survey Report

  Engineering staff should prepare a Project Survey Report during onsite survey.

- Engineering design documents

  Engineering design documents should be completed by designing unit that the subscriber entrusts. Its duplication copy should be provided to the equipment provider before equipment delivery.

- Environment Acceptance Report

  Environment Acceptance Report is used for first environment acceptance in BSC survey, showing whether CBTS installation requirements are satisfied. If installation environment is not appropriate, the customer should improve the conditions and solve the problems. Conduct second environment inspection before the engineering starts.

Acceptance Reports

Installation Acceptance Report and *Test Acceptance Report* are post commissioning acceptance documents. The equipment supplier provides these documents to the customer at delivery time. The installation staff should complete these documents in presence of the customer after CBTS system commissioning.

Reference Documents

Use following manuals for reference during installation:

- *ZXC10 Compact Base Transceiver Station Installation Manual*
- *ZXC10 Compact Base Transceiver Station Technical Manual*
- *ZXC10 Compact Base Transceiver Station Hardware Manual*

This page is intentionally blank.

Chapter 2

Unpacking and Handover

This chapter describes:

- Checking equipment list
- Unpacking wooden case
  - Unpacking procedure
  - Checking cabinet
- Unpacking carton
  - Carton structure
  - Unpacking procedure
  - Unpacking precautions
  - Checking boards
  - Acceptance and handover

Checking Equipment List

Count goods during unpacking and note following points:

- Check *Delivery Checklist* of ZTE CORPORATION.
- Check total number of goods, intactness of packing boxes, and check whether arrival place is actual installation place against packing list number attached to packing boxes.
- If goods are intact, start to unpack and inspect them.
- Contact ZTE headquarters, if any item is damaged or missing during unpacking inspection process.
- Use appropriate tools to open cartons to avoid any equipment damage.

Note:

- Handle CBTS equipment with care and protect it from direct sunlight and rain.
- Count goods against attached list and keep a record.

Unpacking Wooden Box

Unpacking Procedure

Take following steps to unpack a wooden box:

1. Arrange appropriate tools such as nail hammer, pliers, straight screwdriver and crowbar.
2. Insert a flat-tip screwdriver into slit between case and front cover board to make it loose. Then insert a crowbar to unclench cover board.
3. Erect wooden case. Make sure that supports are at the bottom and pull cabinet out from case gently.
4. Remove packing adhesive cabinet tape.

Note:

- Handle CBTS cabinet with care during movement to avoid damage.

Checking Cabinet

Check cabinet according to p*acking list and* ensure following:

- There are no dents, bulges, scratches, peels, blithers, blisters or smudges on outer surface of cabinets.
- Busbars, fans and installation positions on cabinets are free from damage or distortion.
- Cabinet slots for plug-in frames are intact. Guide rails of plug-in slots are not damaged.
- Installation slot labels are intact.
- Fastening screws are not loosen, disconnected, or mistakenly placed.
- Accessories and fittings needed for cabinet installation are complete.

Unpacking Carton

Carton Structure

Figure 2 shows carton box structure.

FIGURE 2 - CARTON BOX

Unpacking Procedure

Take following steps to unpack a carton:

1. Use diagonal pliers to cut packing straps.
2. Use a paper knife to cut adhesive tape along slits on carton covers.

Unpacking Precautions

Take following precautions to unpack carton:

- Take anti-static measures to avoid equipment damage.
- To avoid damage to goods, do not cut too deep.
- Wait for 30 minutes before unpacking equipment, when equipment is moved from a colder and drier place to a hotter and damper place.
- Properly recycle desiccants.

Checking Boards

Check quality, quantity, type, cracks and model of all boards inside carton against packing list provided by ZTE office.

Acceptance and Handover

Upon completion of unpacking, representative of customer and project supervisor should sign *Unpacking for Inspection Report* to acknowledge acceptance. Each party should have a copy of *Unpacking for Inspection Report.*

This page is intentionally blank.

Chapter 3

Cabinet Installation

This chapter describes:

- Cabinet structure
- Cabinet installation precautions
- Installation location specification
- Cabinet installation modes
- Direct installation
  - Direct installation mode flow
  - Direct installation mode procedure
- Adjustable base installation
  - Adjustable base structure
  - Adjustable base installation mode flow
  - Adjustable base installation procedure
- Cabinet accessories installation
  - Cabling runway
- CBTS cabinet interfaces
  - Power interface
  - Feeder cable interface
  - E1 and T1 cable interface
  - FE cable interface
  - Room monitoring interface
  - Order wire phone interface
  - Power monitoring interface
  - External BDS interface
  - External monitoring interface
  - GPS cable interface

Cabinet Structure

Figure 3 shows CBTS cabinet outer view.

FIGURE 3 - CABINET OUTER VIEW

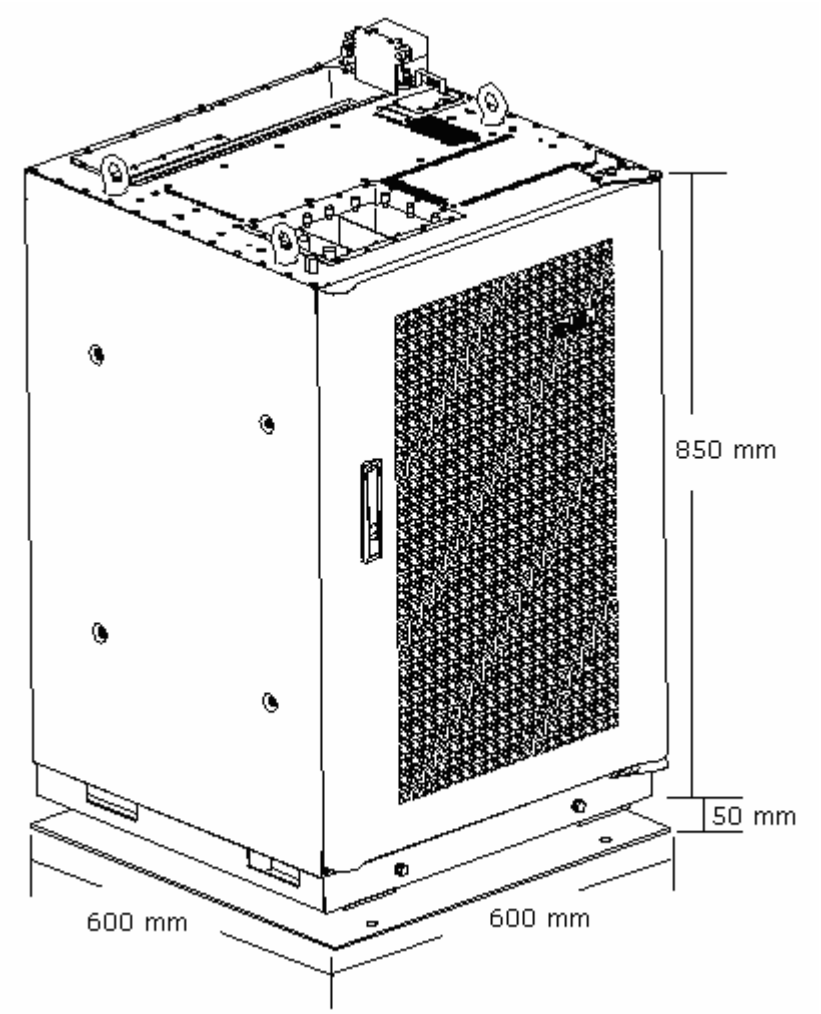

Cabinet dimensions: 850 mm (H) × 600 mm (D) × 600 mm (W)

Cabinet dimensions: 33.46 inch (H) × 23.62 inch (D) × 23.62 inch (W)

Cabinet total height with base is (900 mm) 35.43 inch

Single cabinet with full configuration (4C3S) weighs about (155.5 kg) 342.81 lb

Cabinet Installation Precautions

- Install cabinet according to engineering design specifications.
- Vertical and horizontal errors should be less than 0.1181 inch (0.3 m) and 0.196 inch (0.5 m) respectively.
- Screw all nuts and bolts tightly.
- Handle equipment carefully.

Installation Location Specification

Below figure illustrates installation equipment room specifications:

- From top view distance between walls and cabinet must be more than 1.96 inch (600 mm) indicated by letter C.
- When cabinet is installed with other equipment distance between cabinets must be installed as close as possible, indicated by letter A and B. When cabinet is installed beside walls distance between cabinet and wall must be more than (100 mm) 3.93 inch indicated by letter A and B.
- Minimum distance between cabinet top and roof must be more than 19.68 inch (500 mm). Minimum distance between front cabinet and wall or other cabinet must be more than 31.49 inch (800 mm).

  Figure 4 shows CBTS cabinet installation location specification.

FIGURE 4 - INSTALLATION LOCATION SPECIFICATION

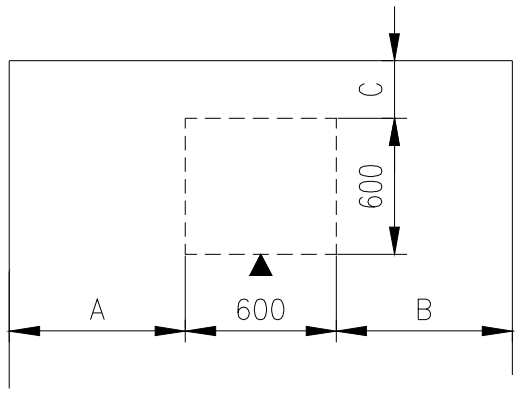

Cabinet Installation Modes

ZXC10 CBTS cabinet installation modes:

- Direct installation mode

  Follow direct installation mode when equipment room is without antistatic floor.

- Adjustable base installation mode

  Follow adjustable base installation mode when equipment room has antistatic floor.

Direct Installation Mode

This section describes CBTS cabinet direct installation mode installation procedure.

Direct Installation Mode Flow

Figure 5 illustrates direct installation mode flow chart.

FIGURE 5 - DIRECT INSTALLATION MODE FLOW CHART

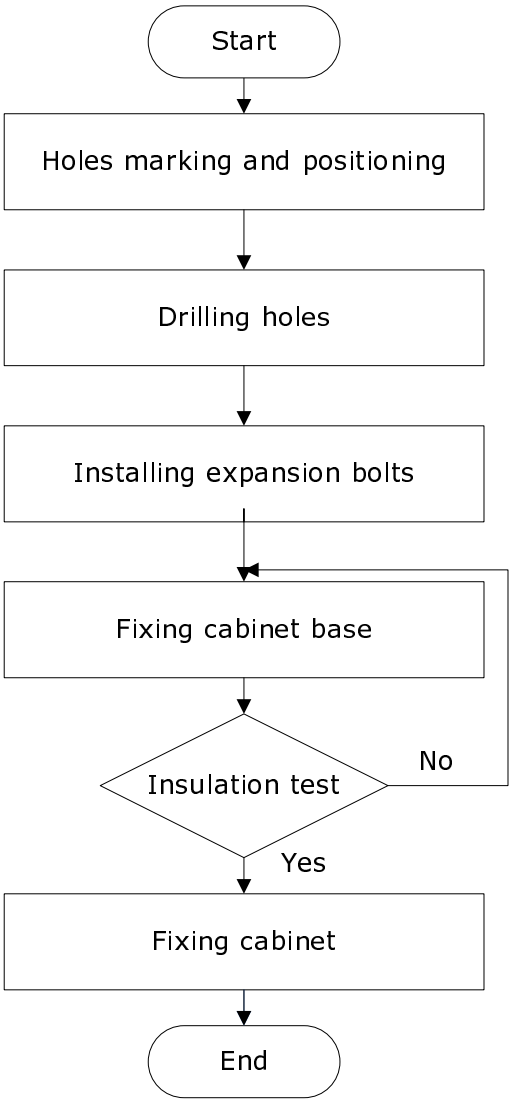

Direct Installation Mode Procedure

Take following steps for direct base installation mode:

1. Hole Marking and Positioning

   Use lineation model to determine position of cabinet base and draw lines according to provided template. If template is not available determine holes position according to engineering design drawings. Figure 6 illustrates this process.

FIGURE 6 - HOLES POSITION IN DIRECT INSTALLATION MODE (UNITS MM)

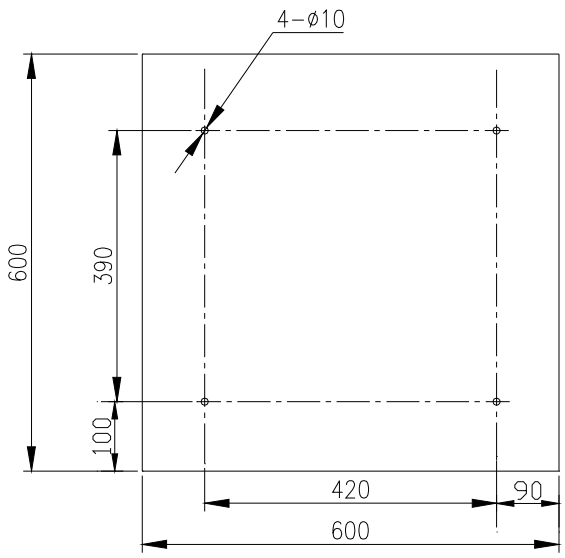

2. Drilling holes

   For M12 expansion bolt, use ϕ 10 drilling bit to drill 3.149 inch (80 mm) deep hole. Use vacuum cleaner to clean dust meanwhile.

3. Installing expansion bolts

   Put tubes in drilled holes and hammer them and insert expansion bolts. Fix bolt with nut and remove nut for cabinet installation. Figure 7 illustrates this process.

FIGURE 7 - EXPANSION BOLTS INSTALLATION

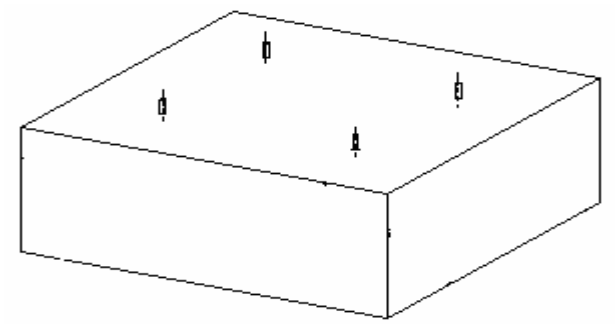

4. Fixing cabinet base

Take following steps to fix cabinet base:

i. Move cabinet to installation position. Figure 8 illustrates to install all items one by one on foundation.

FIGURE 8 - CABINET BASE FIXING

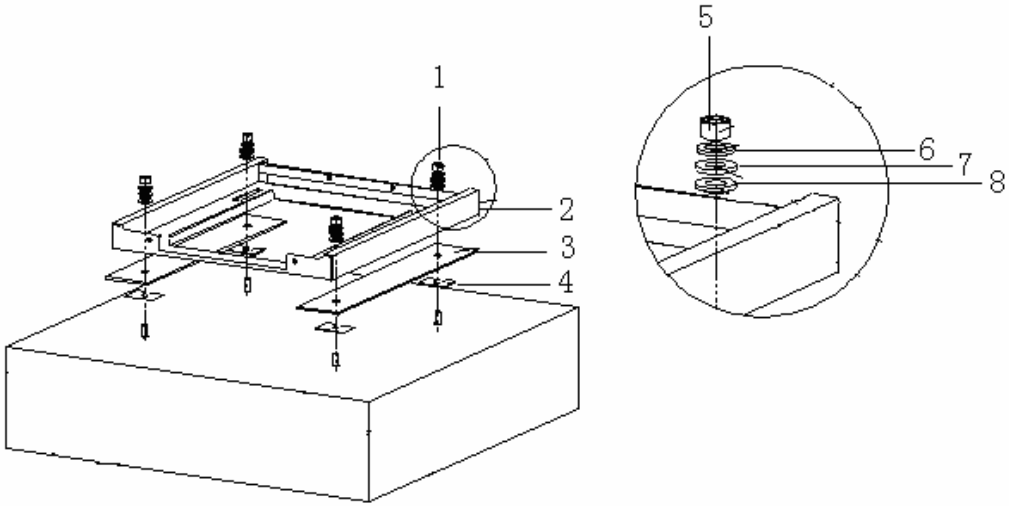

1. Hexagonal nut
2. Frame
3. Insulation board
4. Level adjusting washer
5. Hexagonal nut
6. Plain washer
7. Spring washer
8. Insulating washer

ii. Adjust base level with adjusting washer.

iii. Tight expansion bolts screw with wrench.

Figure 9 shows cabinet base installation final view.

FIGURE 9 - CABINET BASE INSTALLATION

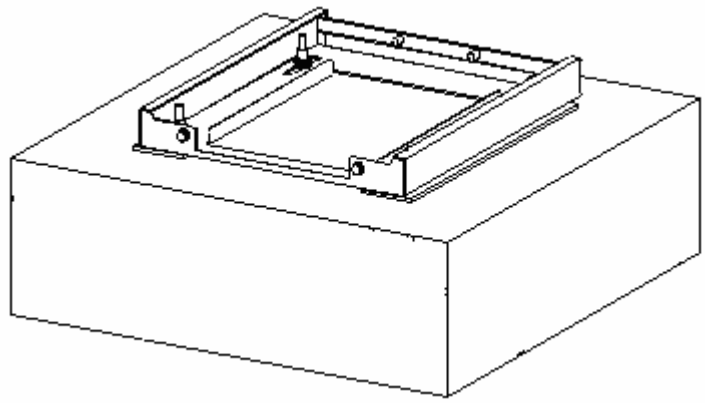

5. Insulation test

   Use multimeter to measure resistance between expansion bolts and cabinet. Open circuit indicates proper insulation. If result is otherwise, check insulation again and repeat the test.

6. Cabinet fixing

   Take following steps to fix cabinet:

   - Take out front side screws and washer from cabinet base to fix cabinet. Figure 10 illustrates this process.

FIGURE 10 - UNINSTALLING SCREWS AND WASHERS

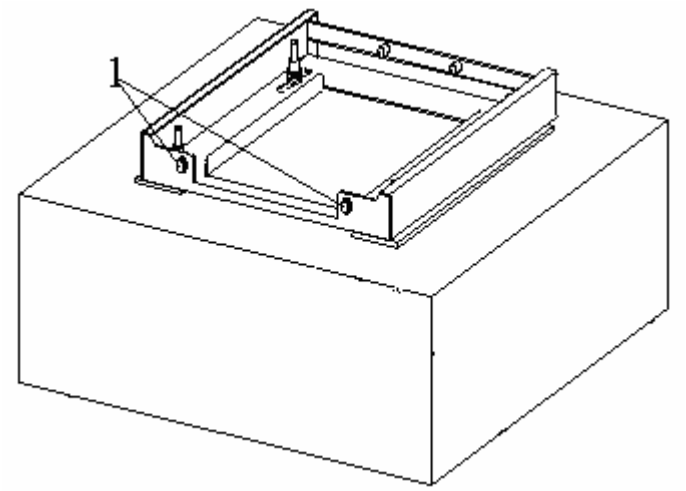

1. Screw

   - Place cabinet on cabinet base from front side. Figure 11 illustrates this process.

FIGURE 11 - PLACING CABINET ON BASE

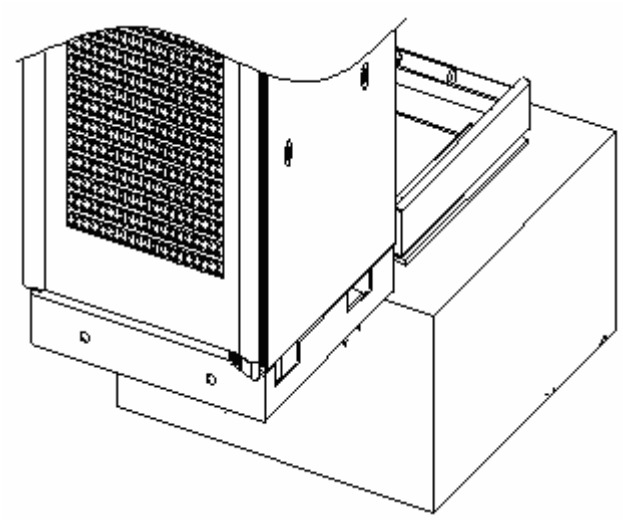

- Push cabinet gently and slide on rails until it adjusts at cabinet base ends. Figure 12 illustrates this process.

FIGURE 12 - ADJUSTING CABINET ON BASE

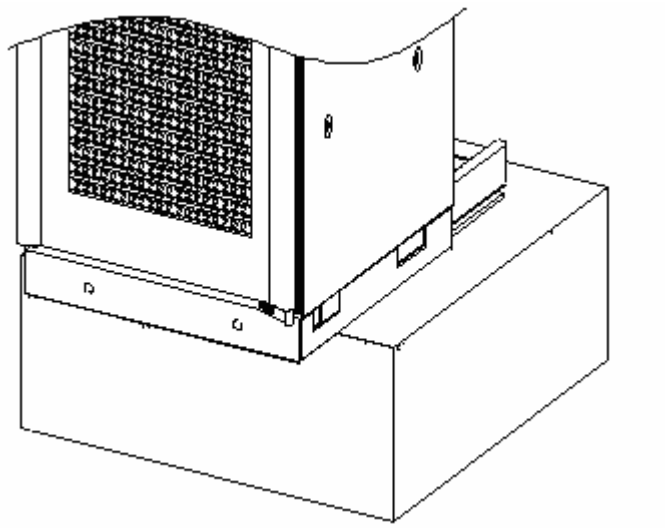

- Use screws and washers to fix cabinet with base. Figure 13 illustrates this process.

FIGURE 13 - FIXING CABINET AND BASE

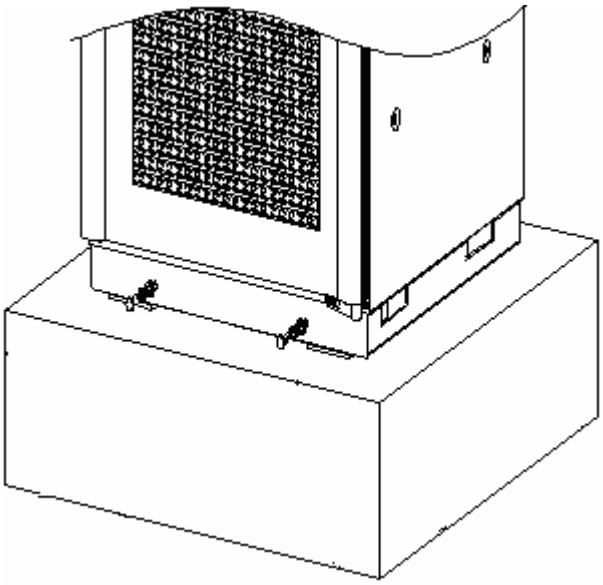

Figure 14 shows CBTS direct installation mode final view.

FIGURE 14 - DIRECT INSTALLATION MODE FINAL VIEW

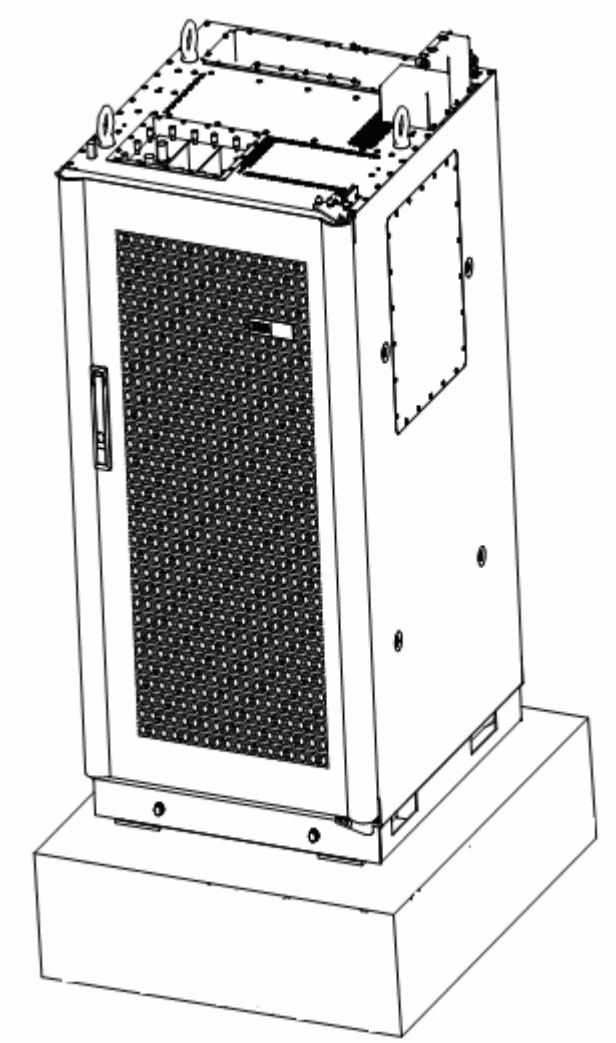

Adjustable Base Installation Mode

This section describes adjustable base installation mode. Use two types of cabinet bases: fixed and adjustable. Figure 15 shows position of antistatic floor, adjustable base and cemented floor.

FIGURE 15 - ADJUSTABLE BASE INSTALLATION MODE

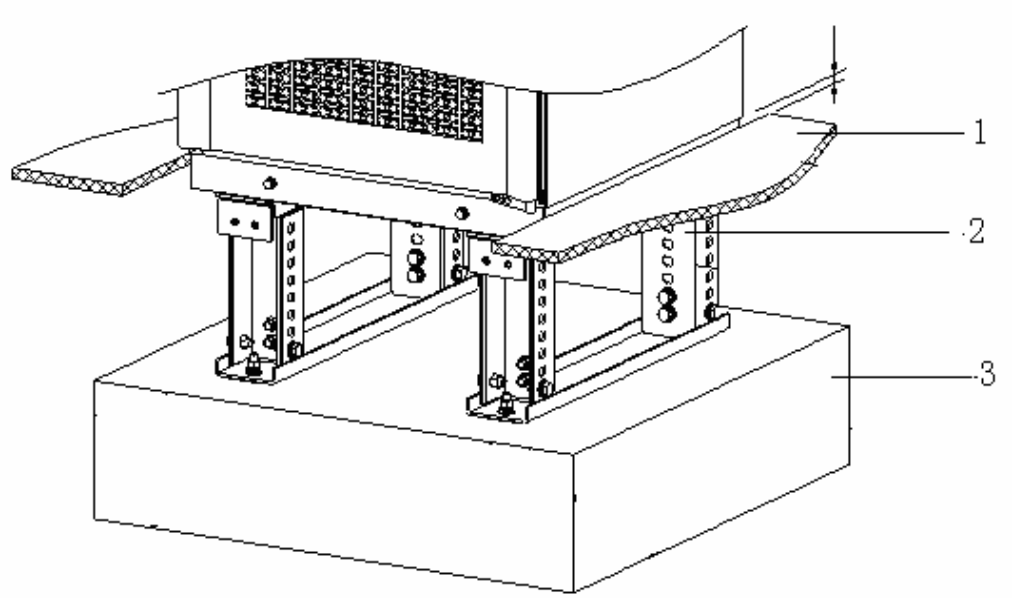

1. Antistatic floor
2. Adjustable base
3. Cemented floor

Slide cabinet onto cabinet base and fix adjustable base with cabinet base using expansion bolts. To open door easily, keep distance between antistatic floor and door in range of 0.39 inch (10 mm) ~ 1.57 inch (40 mm). Adjust base according to antistatic floor height in 0.98 inch (25 mm) steps each time.

Adjustable Base Structure

There are three adjustable base types: A, B and C. This section describes type A. Use hexagonal nut to adjust base height according to conditions. Figure 16 shows adjustable base structure.

FIGURE 16 - ADJUSTABLE BASE

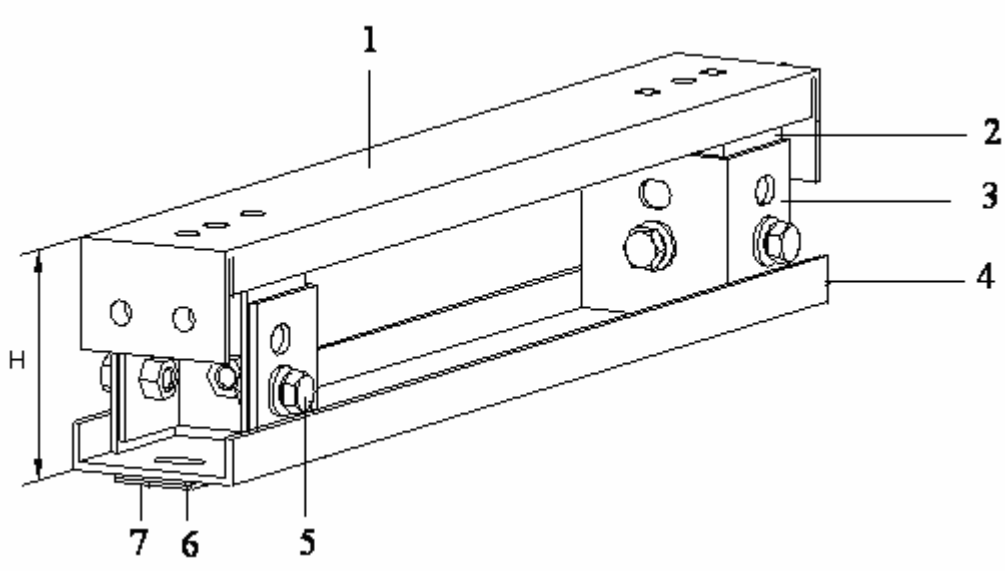

1. Upper frame
2. Upper leg
3. Lower leg
4. Lower frame
5. Hexagonal nut
6. Adjusting washer 1
7. Adjusting washer 2

Table 9 illustrates selection of adjustable base type according to antistatic floor height.

TABLE 9 - ADJUSTABLE BASE SELECTION

Model	Antistatic floor height
A	4.52 inch ~ 5.90 inch (115 mm ~ 150 mm)
B	6.49 inch ~ 9.84 inch (165 mm ~ 250 mm)
C	9.84 inch ~ 16.14 inch (250 mm ~ 410 mm)

Adjustable Base Installation Mode Flow

Figure 17 shows adjustable base installation mode flow chart.

FIGURE 17 - ADJUSTABLE BASE INSTALLATION MODE FLOW CHART

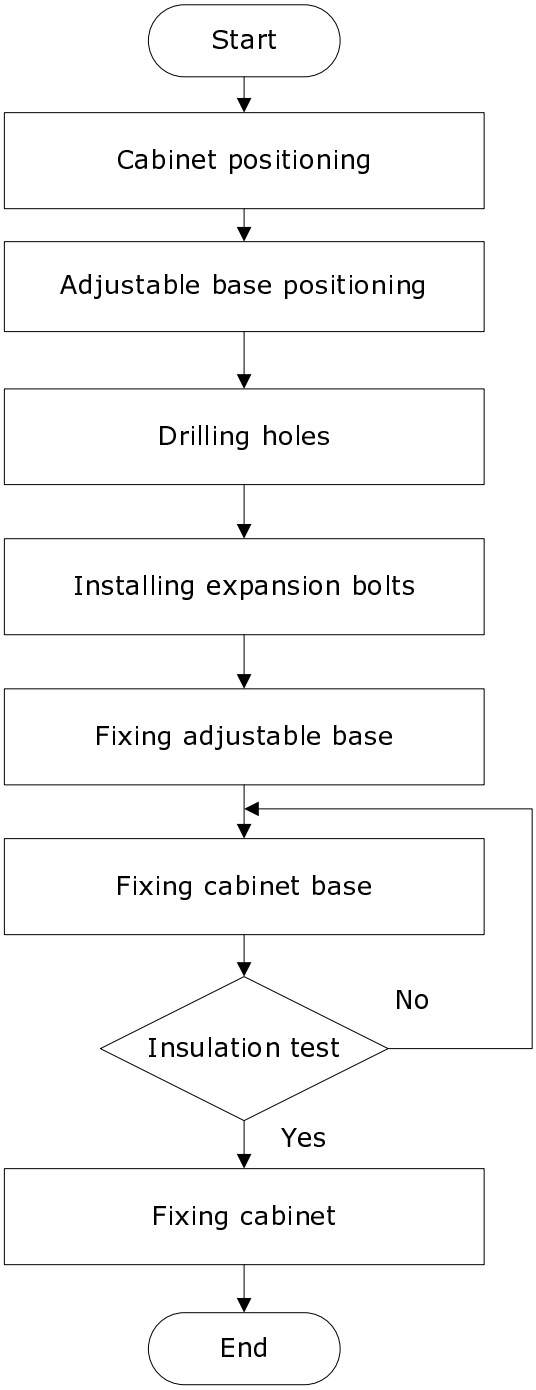

Adjustable Base Installation Procedure

Take following steps for adjustable base installation mode:

1. Cabinet positioning

   Determine cabinet location according to specific engineering design drawing.

2. Adjustable base positioning

   Use lineation model to determine position of cabinet base and draw lines according to provided template. If template is not available determine holes position according to engineering design drawings. Figure 18 illustrates this process.

FIGURE 18 - HOLES POSITION IN ADJUSTABLE BASE INSTALLATION MODE (UNITS MM)

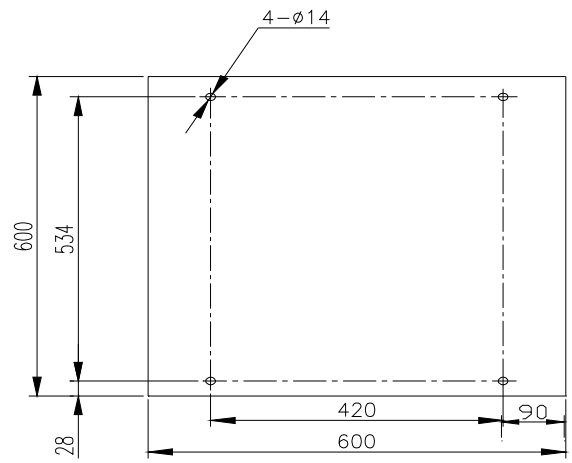

3. Drilling holes

   For M12 expansion bolt, use ϕ14 drilling bit to drill 3.14 inch (80 mm) deep hole. Use vacuum cleaner to clean dust meanwhile.

4. Installing expansion bolt

   Put tubes in drilled holes and hammer them and insert expansion bolts. Fix bolt with nut and remove nut for cabinet installation. Figure 19 illustrates this process.

FIGURE 19 - EXPANSION BOLTS INSTALLATION

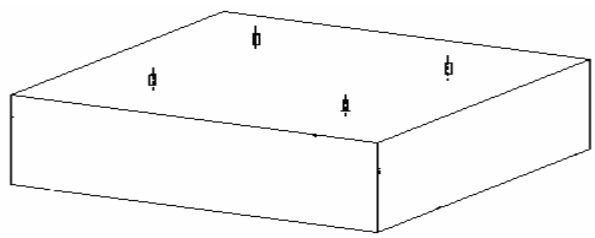

5. Fixing adjustable base

   Take following steps to fix adjustable base:

   i. Clean cabinet base and cemented floor, fix lower adjustable base on floor with corresponding expansion bolts. Use plain and spring washers with expansion bolts. Fix adjustable base on floor with screw caps. Ensure that torque should be at least 45 Nm. Figure 20 shows lower adjustable base and cemented floor contact.

FIGURE 20 - LOWER ADJUSTABLE BASE AND CEMENTED FLOOR

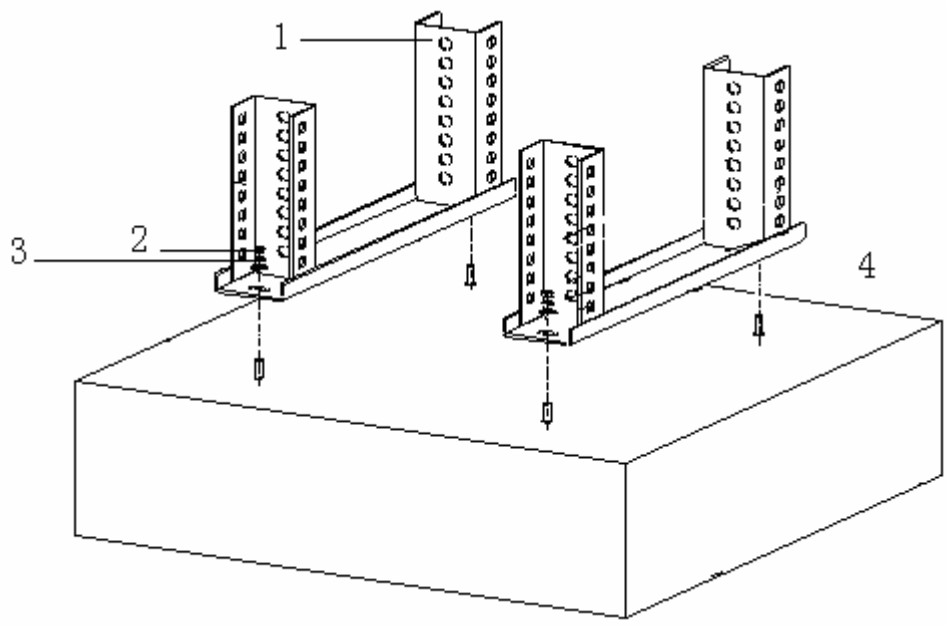

1. Adjustable base lower part
2. Screw cap
3. Spring Washer
4. Plain washer

Use washers to level floor when required. Figure 21 shows two types of washer 0.039 inch and 0.078 inch (1 mm and 2 mm).

FIGURE 21 - WASHERS SPECIFICATIONS

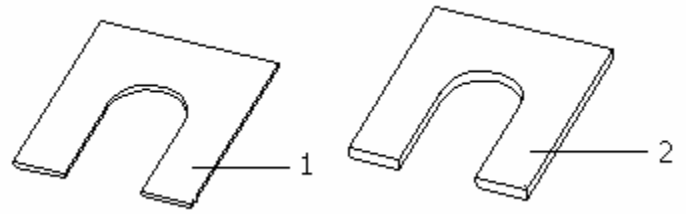

1. 1 mm washer
2. 2 mm washer

ii. Determine base upper part height according to antistatic floor height. Fix upper and lower parts of base with bolts. Figure 22 illustrates this process.

FIGURE 22 - BASE UPPER PART INSTALLATION

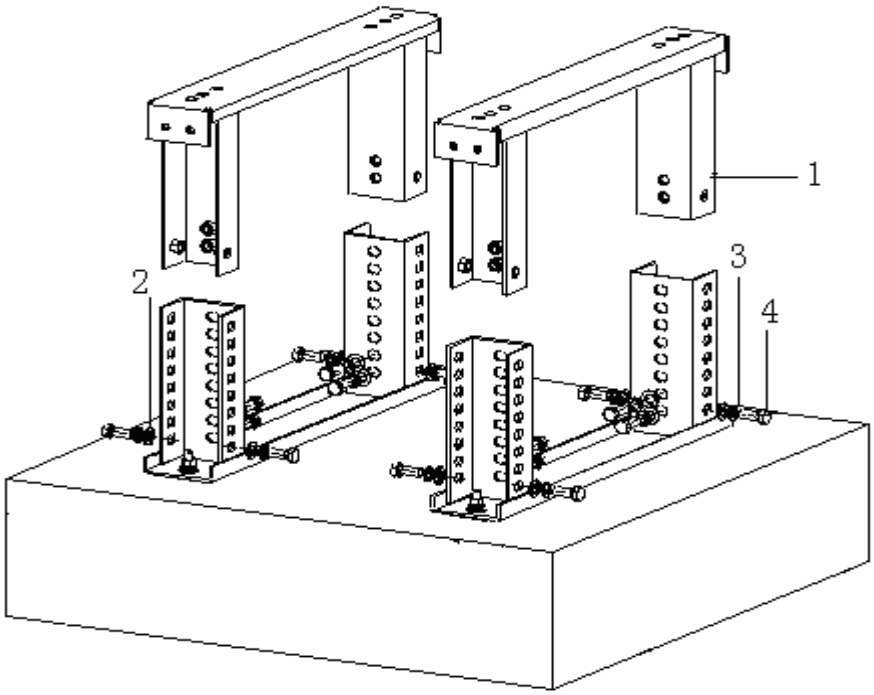

1. Base upper part
2. Plain washer
3. Spring washer
4. Hexagonal bolt

Figure 23 shows adjustable base and floor after installation.

FIGURE 23 - ADJUSTABLE BASE AND FLOOR INSTALLATION FINAL VIEW

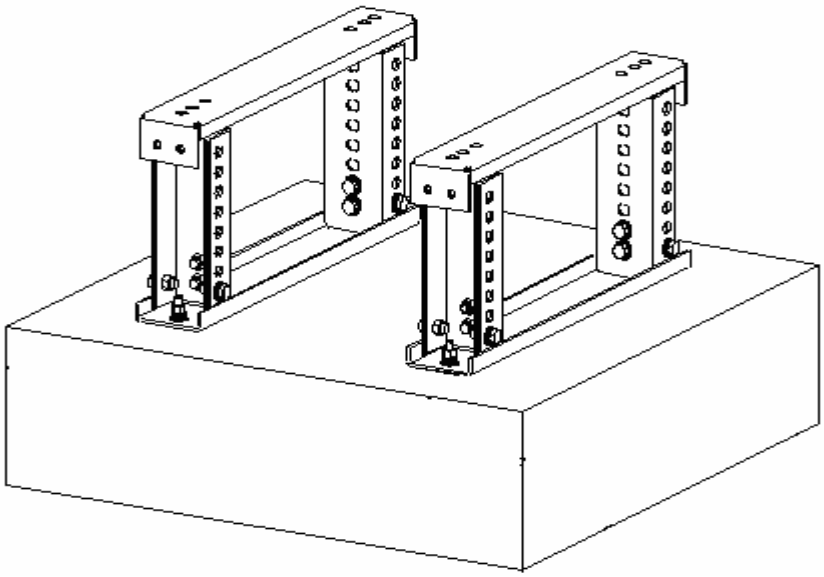

6. Fixing cabinet base

   Take following steps to fix cabinet:

   i. Put insulating board on adjustable base and align all holes. Figure 24 illustrates to assemble cabinet base, spring washer and plain washer.

FIGURE 24 - FIXING CABINET BASE

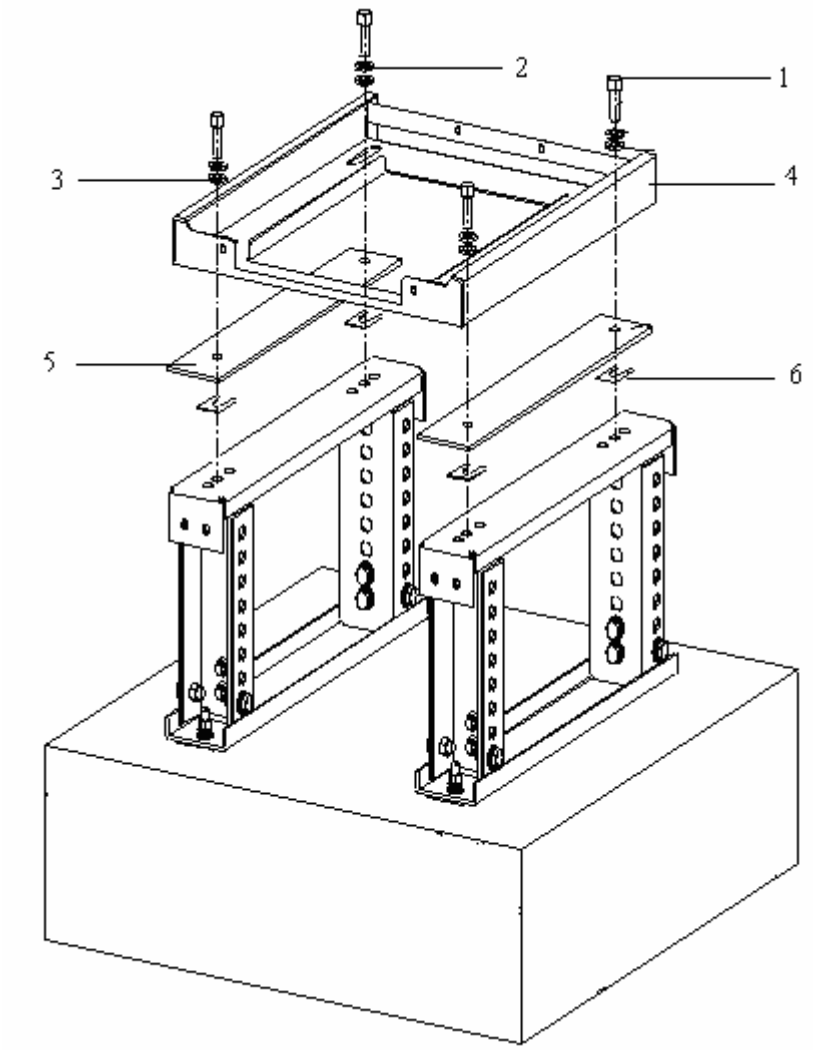

1. Hexagonal nut
2. Plain washer
3. Insulating washer
4. Frame
5. Insulating board
6. Adjusting washer

ii. Ensure cabinet base is at level and measure it by level ruler. Use adjusting washer when required to level base.

iii. Use wrench to fix adjustable base and cabinet tightly. Figure 25 shows adjustable base installation final view.

FIGURE 25 - ADJUSTABLE BASE INSTALLATION FINAL VIEW

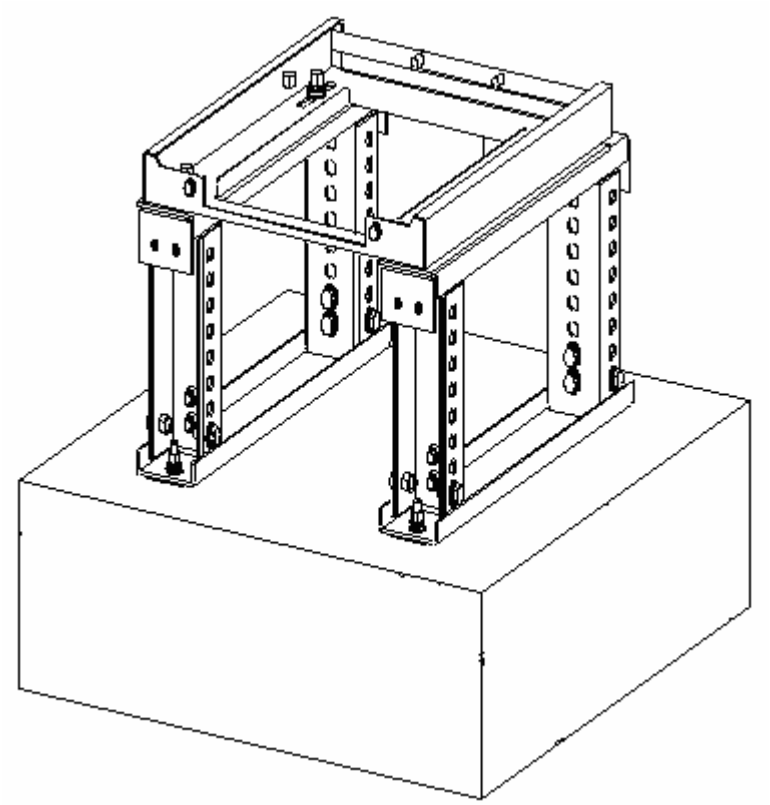

7. Insulation Test

   Use multimeter to measure resistance between expansion bolts and cabinet. Open circuit indicates proper insulation. If result is otherwise, check insulation again and repeat the test.

8. Cabinet fixing

   Cabinet fixing is same as in direct installation mode.

Figure 26 shows adjustable base installation mode final view.

FIGURE 26 - ADJUSTABLE BASE INSTALLATION MODE FINAL VIEW

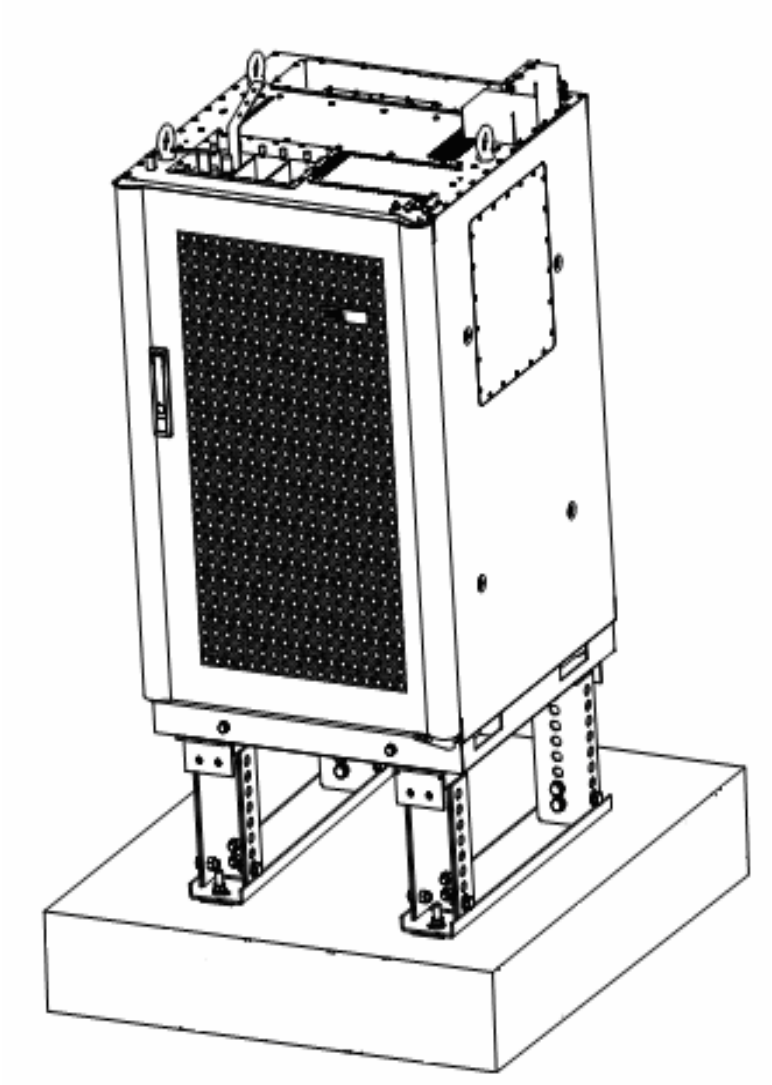

Cabinet Accessories Installation

This section describes cabinet accessories installation.

Cabling Runway

Install cabling runway at cabinet top with four M4 X 10 bolts. Figure 27 shows cabling runway installation. Install converter on cabling runway with four M3 X 12 bolts.

FIGURE 27 - CABLING RUNWAY

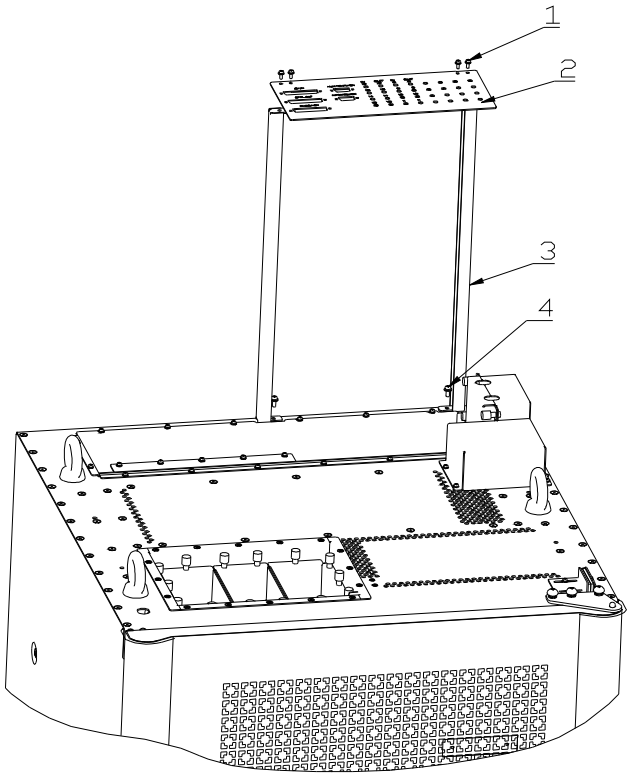

1. M3 X 12 bolt
2. Converter
3. Cabling tray/pipe
4. M4 x 10 bolt

CBTS Cabinet Interfaces

This section describes CBTS cabinet interfaces. Figure 28 illustrates various CBTS cabinet interfaces.

FIGURE 28 - CBTS CABINET INTERFACES

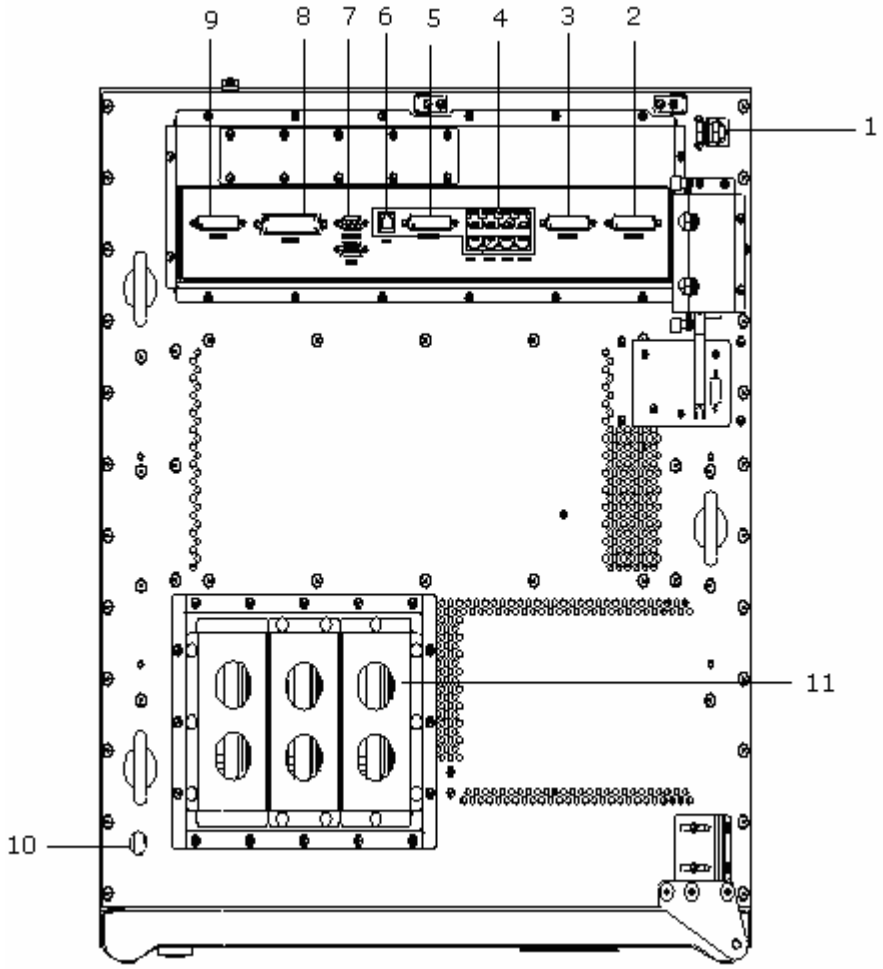

1. Power interface
2. BSC_E1_G0 interface
3. BSC_E1_G1 interface
4. FE interface group
5. ROOM_MON interface
6. O_PH interface
7. Power monitoring interface
8. EXT_BDS interface
9. EXT_MON interface
10. GPS interface
11. Feeder cable interface

Power Interface

Power interface lies in upper right side in Figure 28. Power interface consists of: PGND, -48 V GND and -48 V interfaces. Figure 29 shows power interfaces.

FIGURE 29 - POWER INTERFACES

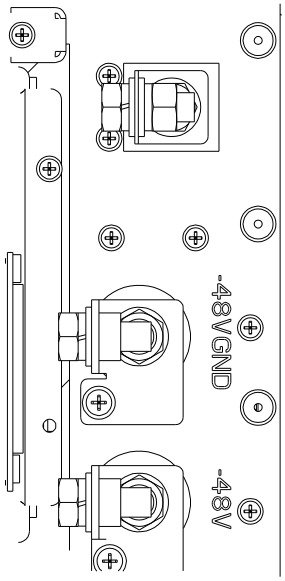

Feeder Cable Interface

Feeder cable interface lies in left lower side in Figure 30. CBTS has six feeder cable interfaces. Figure 30 shows feeder cable interfaces.

FIGURE 30 - FEEDER CABLE INTERFACE

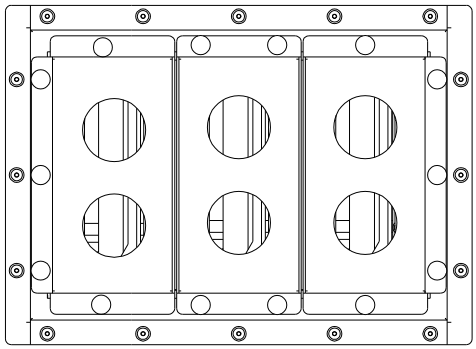

E1/T1 Interfaces

CBTS has a group of E1/T1 interfaces in a row. E1 interfaces are DB 44 connectors which lie in rightmost in Figure 28 marked as BSC.E1_G0 and BSC.E1_G1. Figure 31 shows E1 interfaces.

FIGURE 31 - CBTS E1 INTERFACES

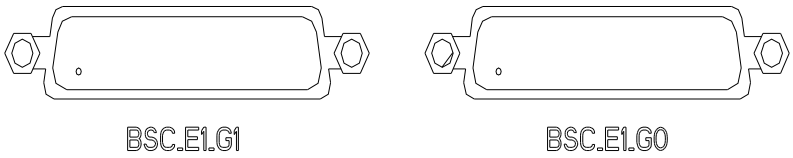

FE Interfaces

Figure 32 shows CBTS FE interfaces. There are eight FE interfaces laying left to E1 interfaces in Figure 28 forming two rows.

Upper row consists of M_TEST, S_TEST, BSC_FE and R_TEST interfaces. These interfaces are only used for testing low level messages and have nothing to do in actual operation of CBTS. Use BSC_FE interface to connect CBTS to BSC, when IP trunk is used to connect CBTS and BSC.

FIGURE 32 - CBTS FE INTERFACES

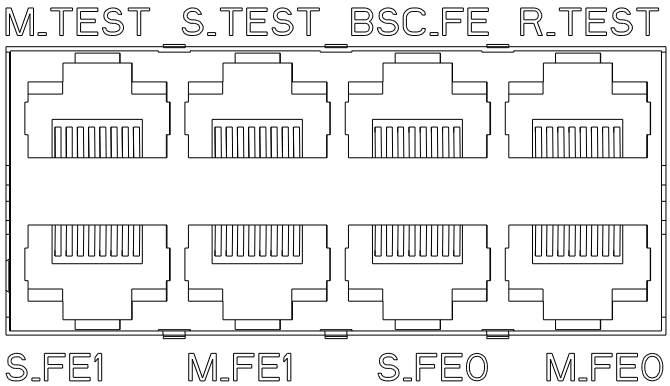

Lower row consists of S_FE1, M_FE1, S_FE0 and M_FE0 interfaces. Use these interfaces to connect multiple cabinets. Use M_FE1 and M_FE0 for media and S_FE1 and S_FE0 for signal stream respectively.

Room Monitoring Interface

Room monitoring interface (ROOM_MON) is DB44 connector laying left to FE interfaces in Figure 28. Figure 33 shows room monitoring interface. ROOM_MON interface is used to connect external monitoring cable.

FIGURE 33 - CBTS ROOM MONITORING INTERFACE

Order Wire Phone Interface

Order wire phone interface (O_PH) is RJ11 connecter laying left to ROM_MON in Figure 28. O_PH interface is used to connect order phone wire. Figure 34 shows CBTS O_PH interface.

FIGURE 34 - CBTS ORDWER WIRE PHONE INTERFACE

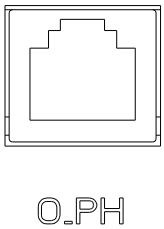

Power Monitoring Interface

Power monitoring interfaces are DB9 connectors laying left to O_PH interface in Figure 28. Figure 35 shows power monitoring interfaces.

FIGURE 35 - POWER MONITORING INTERFACES

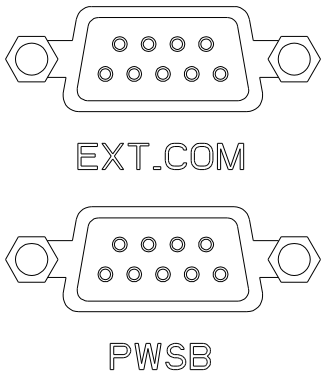

There are two power monitoring interfaces in CBTS cabinet: EXT_COM and PWSB. Use PWSB power interface for connecting monitoring cables in ZTE equipment only. For equipment other than ZTE use EXT_COM interface to connect power monitoring cables.

External BDS Interface

External BDS (EXT_BDS) interface is a DB78 connector laying left to power monitoring interfaces. Use external BDS interface to connect cabinets side by side in baseband extension mode. Connect EXT_BDS interface of Master and Slave cabinet. EXT_BDS interface transmits baseband information. Figure 36 shows CBTS external BDS interface.

FIGURE 36 - CBTS EXTERNAL BDS INTERFACE

Connect adjacent master and slave ports using FE cables in BDS extend mode.

External Monitoring Interface

External monitoring (EXT_MON) interface is a DB44 connector laying left to external BDS interface. Figure 37 shows CBTS external monitoring interface.

FIGURE 37 - CBTS EXTERNAL MONITORING INTERFACE

Connect master and slave CBTS cabinet side by side using EXT_MON interface. It transmits environmental information from slave to master BTS.

GPS Interface

GPS interface lies in left lower side. Use GPS interface to connect GPS antenna.

Chapter 4

Cable Installation

This chapter describes cable installation:

- Power and grounding cables
  - Power cable types
  - Power cable preparation
  - Power and grounding cable connections
  - Cable installation requirements
- Trunk cable installation
  - E1 cable installation
  - Trunk cable processing
  - Trunk cable conversion
  - E1 cable installation requirements
- Feeder cable installation

Power and Grounding Cables

Power Cable Types

There are three CBTS power cables, their specifications are as follows:

- Blue cable with cross section area of 25 mm^2 (for -48 V power supply).
- Black cable with cross section area of 25 mm^2 (for -48V working ground).
- Yellowish green cable with cross section area of 35 mm^2 (for protection ground).

Power Cable Preparation

Take following steps to prepare power cables:

1. Cutting

   According to design drawing, cut cable with cutter.

2. Stripping

   Take power cable length 0.787 inch (20 mm) ~ 0.11 inch (30 mm) longer than effective crimping area of wiring terminal. Strip the sheath with a cable stripper.

3. Crimping

   Select a proper wiring terminal and crimp it with a pair of crimping pliers. Figure 38 shows tightly crimped wiring terminal.

FIGURE 38 - CRIMPING PLIERS

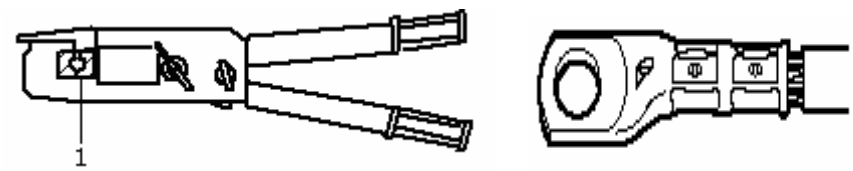

1. Clamping tool

4. Wrapping

   After crimping, wrap up joint with insulation tapes. Use two layers of insulation tapes one layer overlapping other. Use same color of insulation tapes used for power cable.

5. Labeling

   Label power cables 0.19 inch (5 mm) away from wiring terminals on both ends.

Power and Grounding Cable Connections

Figure 39 shows CBTS power and grounding cable connections top view.

FIGURE 39 - CBTS POWER AND GROUNDING CABLE CONNECTION

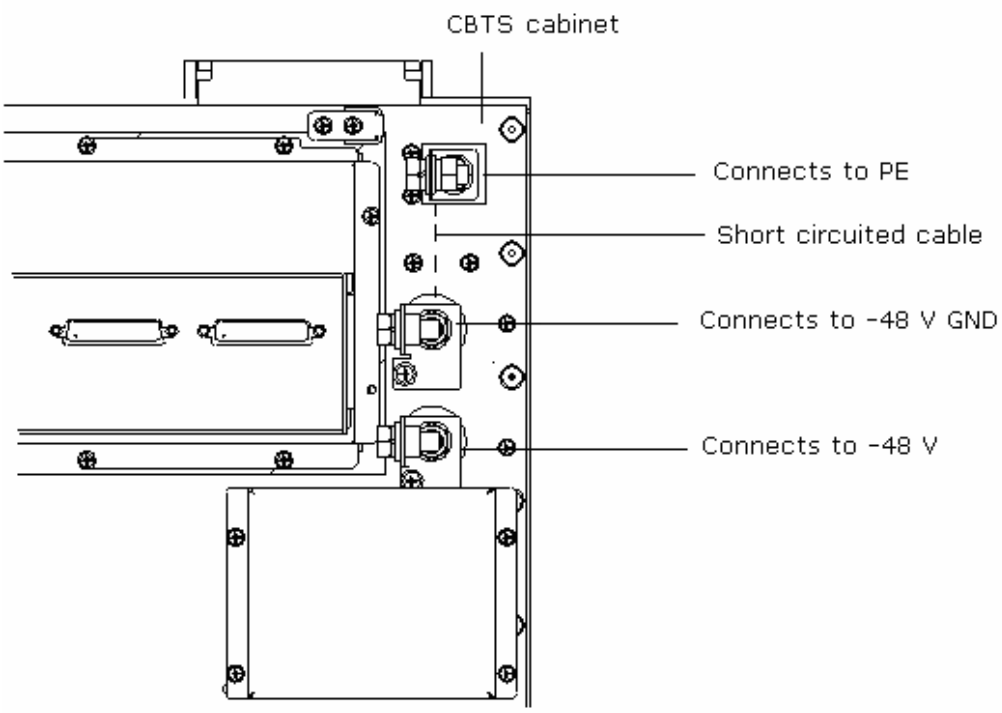

Table 10 describes CBTS power and ground cables connection methods.

TABLE 10 - POWER AND GROUNDING CABLE CONNECTION

Cable	Connection methods
–48 V power supply cable	Connect one end to CBTS –48 V input terminal and another end –48 V rectifier output terminal
–48 V GND cable	Connect one end to CBTS –48 V GND terminal and another end to –48V rectifier GND output terminal
PE protection grounding cable	Connect one end to CBTS protection grounding terminal and another end to indoor grounding bar. Use 6 mm^2 yellow/green shorted line as short-circuiting cable between –48 V GND and PE terminals

Caution:

- Ensure that power and grounding cables are according to engineering specifications and standards.
- Take all measures to guarantee staff and equipment safety.

Cable Installation Requirements

Ensure following requirements during power and grounding cables installation:

- Install power supply and grounding cables separately.
- Ensure that distance between cable bundles is at least 7.87 inch (200 mm).
- Cut cable ties flat after making cable bundles.
- Measure cable lengths before installation. Avoid cable connections or welding.

  Figure 40 illustrates this process.

FIGURE 40 - POWER SUPPLY AND GROUNDING CABLES

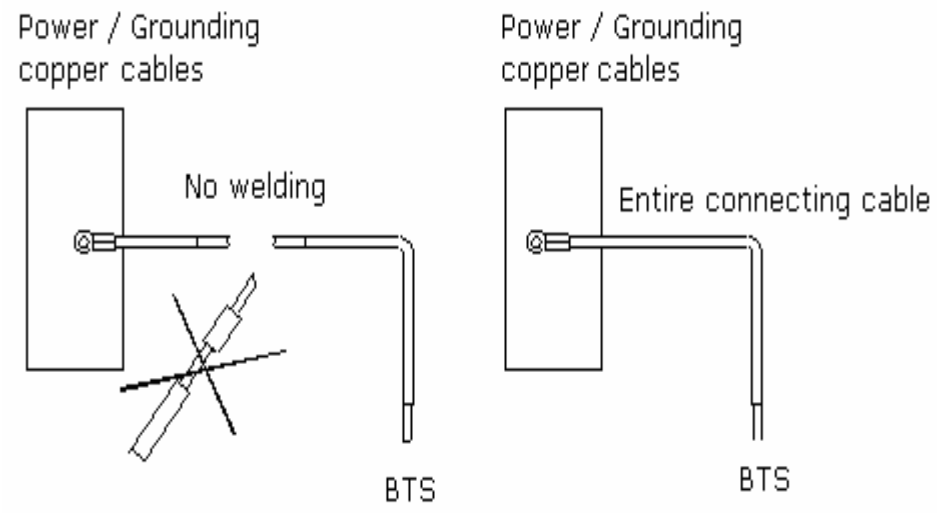

- Ensure less contact resistance between cable and busbar by using plain and spring washers while fixing the lugs.
- Avoid overlapping lugs while connecting two or more cables at same connection stud. In case if overlapping is unavoidable place bigger lug under smaller one and bend upper lug at 45^0 or 90^0 angles.

Figure 41 illustrates this process.

FIGURE 41 - POWER SUPPLY CABLE CONNECTIONS

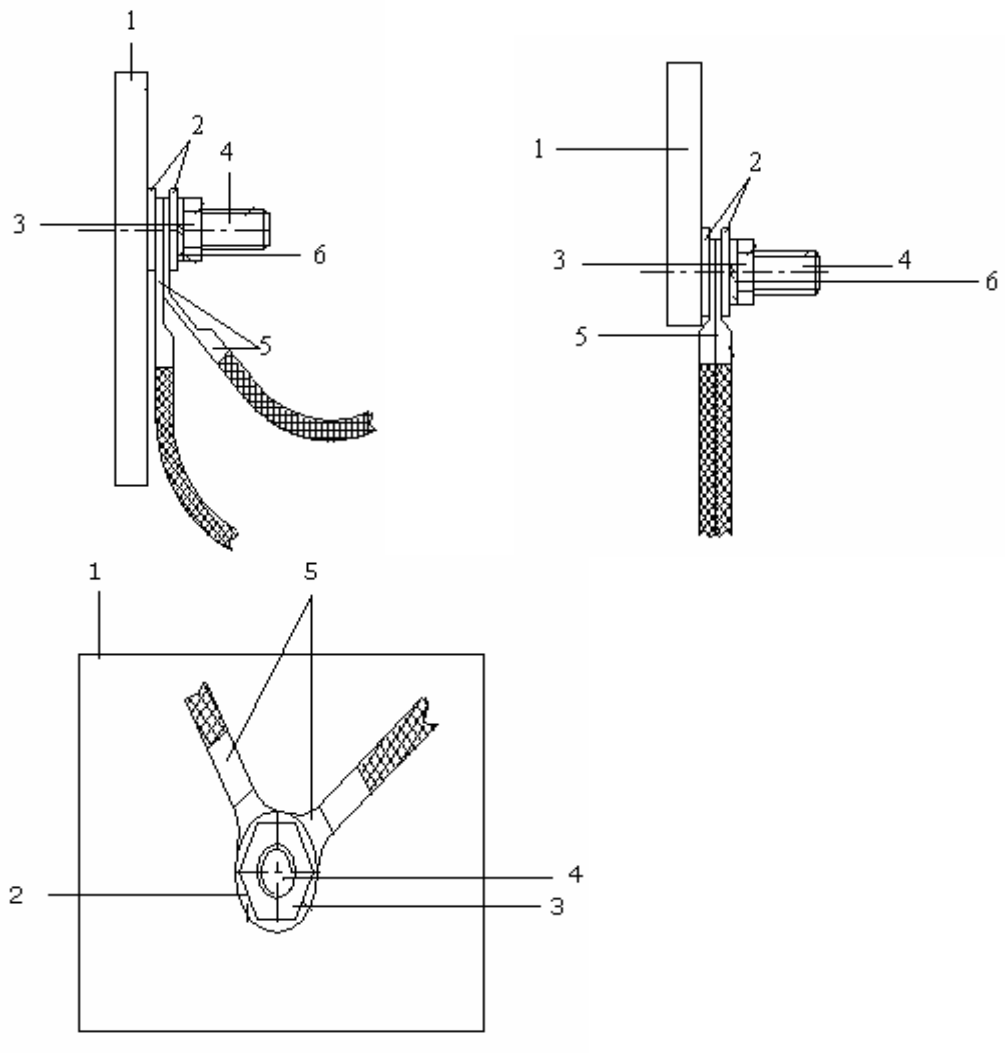

1. Copper busbar
2. Plain washer
3. Nut
4. Bolt
5. Cable
6. Spring washer

Trunk Cable Installation

There are two types of trunk cables: E1 and T1 cables.

T1 Cable Installation

- 100Ω T1 cable structure

  Figure 42 shows 32-core 100Ω T1 cable structure.

FIGURE 42 - 100Ω T1 CABLE STRUCTURE

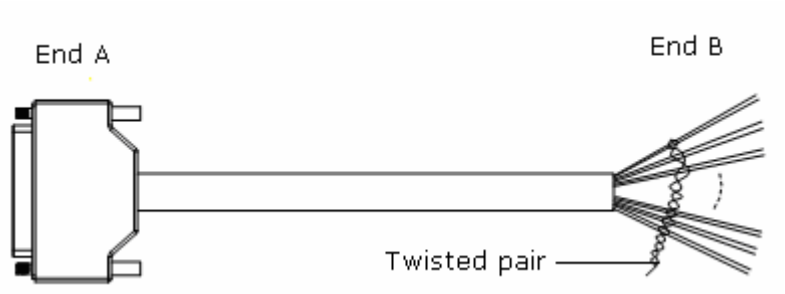

- 100Ω T1 cable connection

  Connect 100Ω T1 cable End A (left end in Figure 32) to BSC E1 interface of conversion board at CBTS top. Connect T1 cable End B (right end in Figure 32) to DDF.

  Table 11 describes 100 Ω T1 cable internal connections in detail.

TABLE 11 - 100 Ω INTERNAL CABLE CONNECTIONS

Wire number	Wire color		Wire number	Wire color	
	Wire A	**Wire B**		**Wire A**	**Wire B**
1	White	Blue	9	Black	Blue
Signal definition	**RX0-**	**RX0+**		**RX4-**	**RX4+**
2	White	Orange	10	Black	Orange
Signal definition	**TX0-**	**TX0+**		**TX4-**	**TX4+**
3	White	Green	11	Black	Green
Signal definition	**RX1-**	**RX1+**		**RX5-**	**RX5+**
4	White	Brown	12	Black	Brown

Wire number	Wire color		Wire number	Wire color	
	Wire A	Wire B		Wire A	Wire B
Signal definition	**TX1-**	**TX1+**		**TX5-**	**TX5+**
5	Red	Blue	13	Yellow	Blue
Signal definition	**RX2-**	**RX2+**		**RX6-**	**RX6+**
6	Red	Orange	14	Yellow	Orange
Signal definition	**TX2-**	**TX0+**		**TX6-**	**TX6+**
7	Red	Green	15	Yellow	Green
Signal definition	**RX3-**	**RX3+**		**RX7-**	**RX7+**
8	Red	Brown	16	Yellow	Brown
Signal definition	**TX3-**	**TX3+**		**TX7-**	**TX7+**

Note:

- For trunk cable details, see ZXC10 CBTS *Hardware Manual*.

This section describes processing and conversion of trunk cables taking a 75 Ohm E1 cable.

E1 Cable Installation

- 75 Ω E1 cable structure

  75 Ω E1 cable contains 8 E1 signals and uses two 8-core coaxial cables. Outer diameter of a single core cable is less than 0.08 inch (2 mm). Figure 43 shows E1 cable structure.

FIGURE 43 - 75 Ω E1 CABLE STRUCTURE

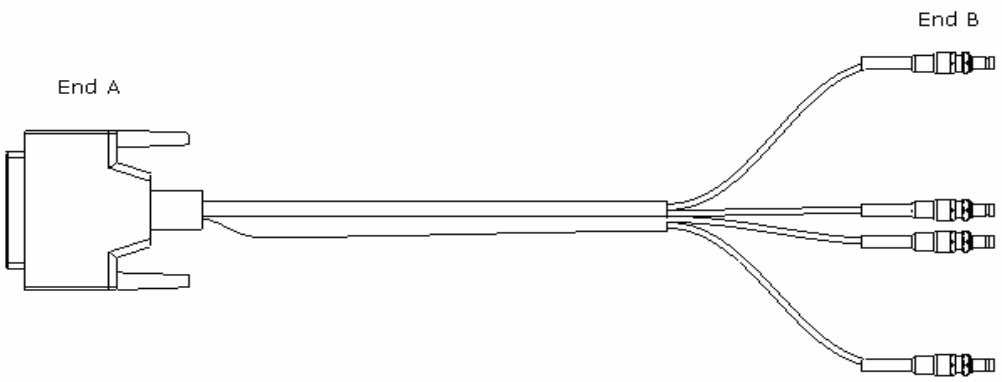

- 75 Ω E1 cable connection

  Connect 75 Ω E1 cable End A (left end in Figure 43) to BSC E1 socket of conversion board at CBTS top. Connect E1 cable End B (right end in Figure 43) to corresponding E1 interface of conversion board on feeder shelf.

Table 12 describes 75 Ω E1 cable internal connections in detail.

TABLE 12 - 75 Ω E1 CABLE INTERNAL CONNECTIONS

Signal definition	**IN0**	**OUT0**	**IN1**	**OUT1**
End A pin number	22 23	24 25	1 2	3 4
Cable number	1-1-internal 1-1-external	1-2-internal 1-2-external	1-3-internal 1-3-external	1-4-internal 1-4-external
Signal definition	**IN2**	**OUT2**	**IN3**	**OUT3**
End A pin number	5 6	7 8	9 10	11 12
Cable number	1-5-internal 1-5-external	1-6-internal 1-6-external	1-7-internal 1-7-external	1-8-internal 1-8-external
Signal definition	**IN4**	**OUT4**	**IN5**	**OUT5**
End A pin number	13 14	43 44	39 40	41 42
Cable number	2-1-internal 2-1-external	2-2-internal 2-2-external	2-3-internal 2-3-external	2-4-internal 2-4-external
Signal definition	**IN6**	**OUT6**	**IN7**	**OUT7**
End A pin number	35 36	37 38	31 32	33 34
Cable number	2-5-internal 2-5-external	2-6-internal 2-6-external	2-7-internal 2-7-external	2-8-internal 2-8-external

Note:

- '1-1-internal and 1-1-external' stands for internal and external conductors of the 1st core in 8 core cable respectively.

- 120Ω E1 cable structure

  Figure 44 shows 32-core 120Ω E1 cable structure.

FIGURE 44 - 120Ω E1 CABLE STRUCTURE

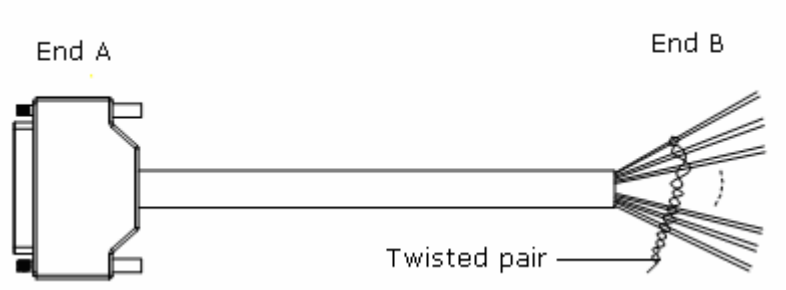

- 120Ω E1 cable connection

  Connect 120Ω E1 cable End A (left end in Figure 44) to BSC E1 socket of conversion board at CBTS top. Connect E1 cable End B (right end in Figure 44) to DDF.

Table 13 describes 120Ω E1 cable internal connection details.

TABLE 13 - 120Ω E1 CABLE INTERNAL CONNECTIONS

Signal definition	**IN0**	**OUT0**	**IN1**	**OUT1**
	RX0- RX0+	**TX0- TX0+**	**RX1- RX1+**	**TX1- TX1+**
End A pin number	22 23	24 25	1 2	3 4
Cable color	Blue red 1 Blue black 1	Pink red 1 Pink black 1	Green red 1 Green black 1	Yellow red 1 Yellow black 1
Signal definition	**IN2**	**OUT2**	**IN3**	**OUT3**
	RX2- RX2+	**TX2- TX2+**	**RX3- RX3+**	**TX3- TX3+**
End A pin number	5 6	7 8	9 10	11 12
Cable color	Grey red 1 Grey black 1	Blue red 2 Blue black 2	Pink red 2 Pink black 2	Green red 2 Green black 2
Signal definition	**IN4**	**OUT4**	**IN5**	**OUT5**
	RX4- RX4+	**TX4- TX4+**	**RX5- RX5+**	**TX5- TX5+**
End A pin number	13 14	43 44	39 40	41 42
Cable color	Yellow red 2 Yellow black 2	Grey red 2 Grey black 2	Blue red 3 Blue black 3	Pink red 3 Pink black 3

Signal definition	IN6	OUT6	IN7	OUT7
	RX6- RX6+	TX6- TX6+	RX7- RX7+	TX7- TX7+
End A pin number	35 36	37 38	31 32	33 34
Cable color	Green red 3 Green black 3	Yellow red 3 Yellow black 3	Grey red 3 Grey black 3	Blue red 4 Blue black 4

Note:

- 'Blue red 1' stands for there is one red label on blue cable.
- 'Pink red 2' stands for there are two red labels on pink cable.

Trunk Cable Processing

- Make CC4Y-J32 connector for E1 cable.

Figure 45 shows procedure to make CBTS side connector.

FIGURE 45 - CC4Y-J32 COAXIAL CABLE CONNECTOR ASSEMBLY

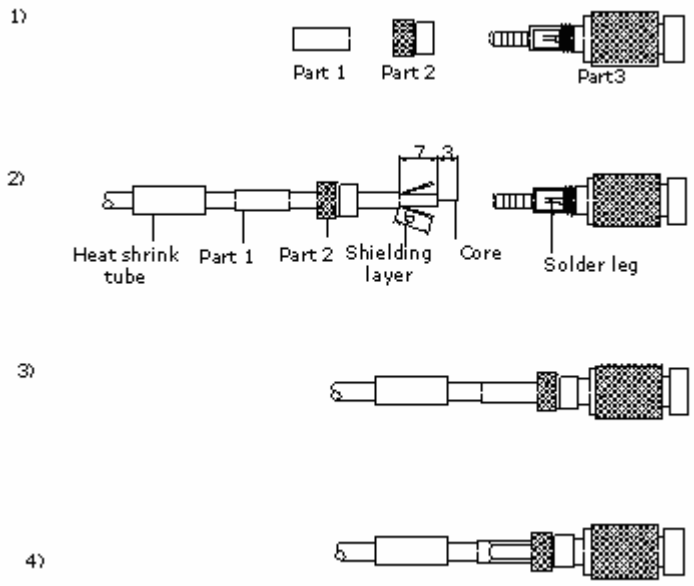

Take following steps to make CC4Y-J32 connector.

i. Slip parts 1 and 2 around cable, peel cable end, tin the core wire, and open shielding layer.

ii. Connect core wire by soldering and screw part 2 to part 3.

iii. Place crimping tube and crimp the connector.

- Make coaxial connector on DDF side.

Figure 46 shows coaxial cable connector on DDF side.

FIGURE 46 - COAXIAL CABLE ON DDF SIDE

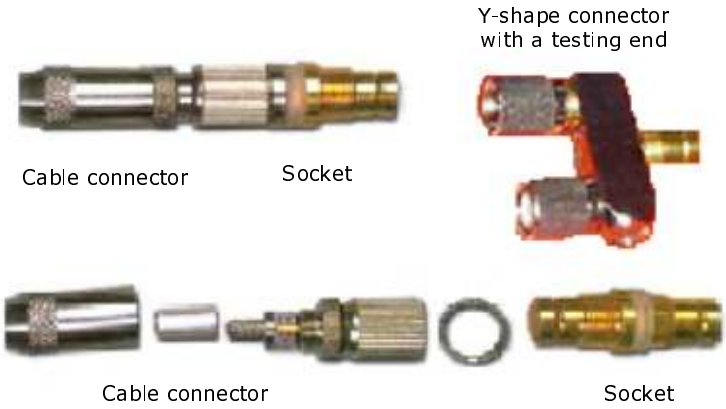

Figure 47 illustrates coaxial connector assembly on DDF side.

FIGURE 47 - COAXIAL CONNECTOR ASSEMBLY ON DDF SIDE

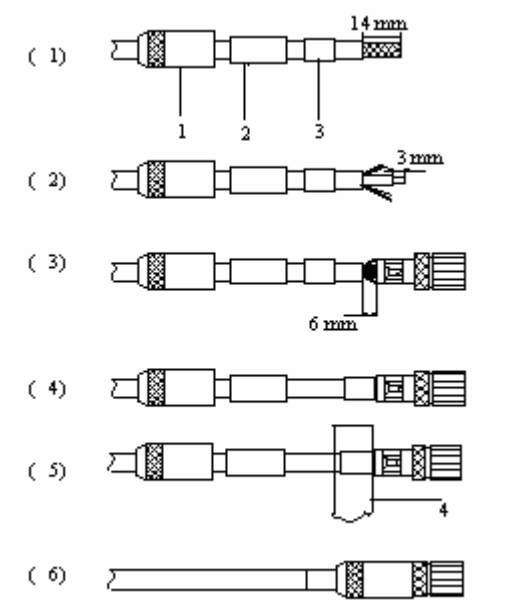

1. Connector sheath
2. Heat shrink tube
3. Crimping tube
4. Crimping plier

Take following steps to make coaxial connector on DDF side.

i. Strip cable covering about 0.55 inch (14 mm).

ii. Slip cable connector sheath, heat-shrink tube and crimping tube in sequence. Open shielding net with a net opening sleeve or by hand. Strip internal insulation layer to expose 0.11 inch (2.5 mm) of internal conductor.

iii. Insert core into plug. Insert core wire into soldering pin at back of inner conductor and solder it. Trim shielding mesh with 0.23 inch (6 mm) crimping tube.

iv. Push crimping tube and shielding net into connector tail.

v. Use crimp pliers to crimp the crimping tube into a regular hexahedron. Crimp twice in different angles.

vi. Slip the heat shrink tube onto crimped tube; heat it with an air blower to make it shrink, and screw the tail cover.

- Trunk cable test

  Solder, connectors internal conductors at both ends and coaxial cables inner conductors leaving no dry joint. Ensure not to short internal and external conductors.

Trunk Cable Conversion

Implement conversion from 75 Ohm to 120 Ohm trunk cable according to specifications provided by ZTE. One converter serves as one E1 cable. 75 Ohm trunk cable uses BNC connectors and 120 Ohm trunk cable uses 8P8C Ethernet cable sockets.

- Impedance converter

Figure 48 shows impedance converter structure.

FIGURE 48 - IMPEDANCE CONVERTER

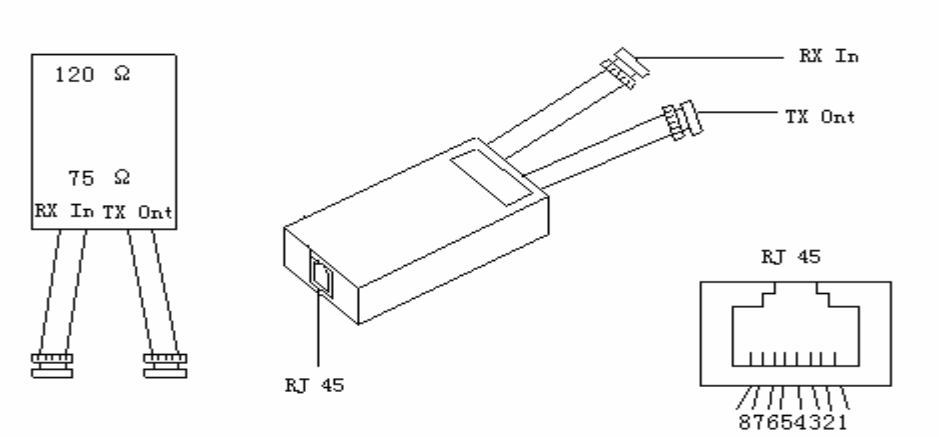

- Wiring relationship for impedance converter

  Figure 49 shows impedance converter wiring relationship.

  Take following steps to establish impedance converter wiring relationship.

  i. To receive a balanced signal, connect pin 1 and pin 2. Use converting chip to convert balanced signal into unbalanced signal and get output from coaxial TX end.

  ii. Convert unbalanced signal into balanced signal at RX end using converting chip and feed it to RJ-45 socket.

  iii. Connect shielding layer at RX end to Pin 6 of RJ-45 socket through jumper JP2.

  iv. Directly connect shielding layer of TX end to shielding layer of RJ-45 or connect it to Pin 3 of RJ-45 through jumper JP1.

FIGURE 49 - IMPEDANCE CONVERTER WIRING RELATIONSHIP

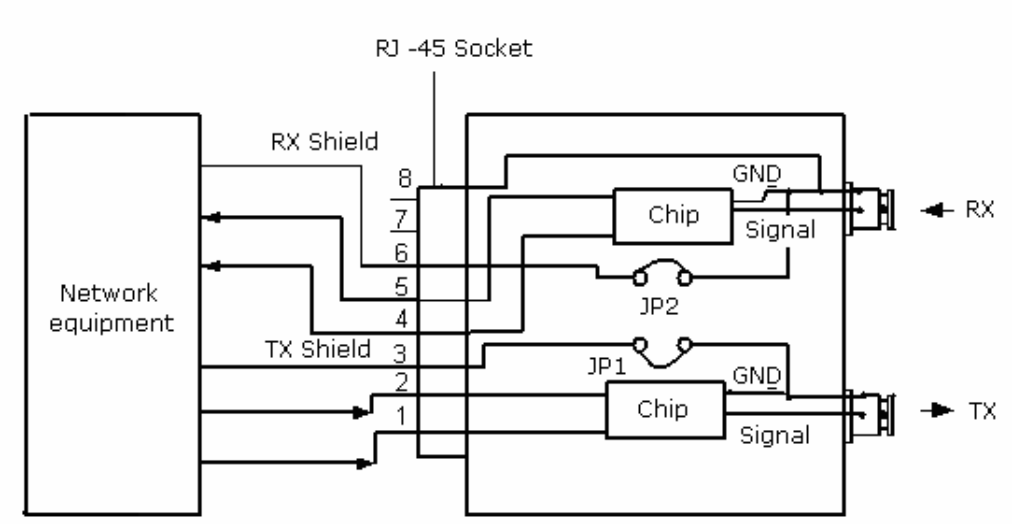

Table 14 describes specific wiring relationship.

TABLE 14 - IMPEDANCE CONVERTER WIRING RELATIONSHIP

RJ-45 Socket	Chip	Related function
1&2	JP1	TX core line
3	JP1	TX shield
4&5	JP2	RX core line
6	JP2	RX shield

E1/T1 Cable Installation Requirements

- Separately install E1/T1 cable for each single cabinet.
- E1/T1 cable type, quantity, routing, length and installation position must be according to engineering design drawings.
- Before cable installation, ensure that are not damaged and all cables have delivery logs and quality certificate to ensure product quality.
- Use cable tie or wax cable bundle during cable installation. Keep cable tie maximum length between two cables up to 39.37 inch (1000 mm). Ensure cable ties are not too tight.
- Use different cable strap according to circumstance, avoid using two or more cable straps for bundling. Cut cable straps flat after bundling. Figure 50 shows difference between correct and incorrect bundle.

FIGURE 50 - CABLE STRAPS REQUIREMENTS

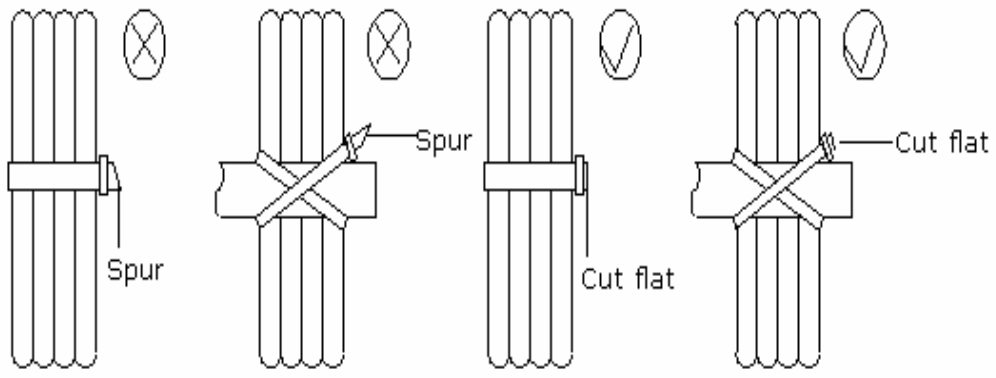

- Keep space between each two cable straps up to 3~4 times longer than bundle diameter. Figure 51 shows this process.

FIGURE 51 - CABLE STRAPS

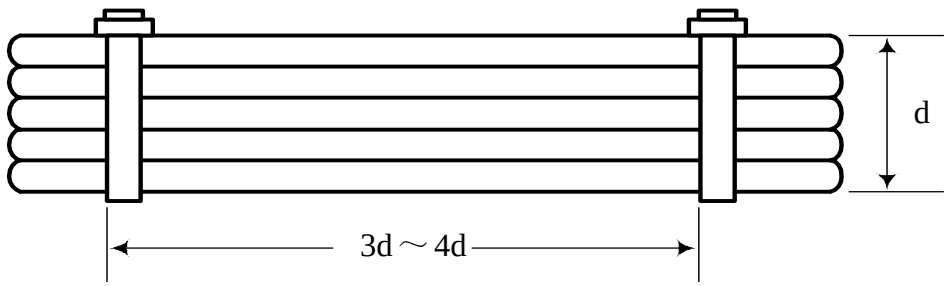

Feeder cable installation

Take following steps to install feeder cable.

1. Remove cover from cabinet top to install feeder cable.
2. Insert RFE board.
3. Put the cover back and tight it with screws.
4. Insert lightning arrester into feeder nut.
5. Use wrench to fasten nut.

   Figure 52 illustrates this process.

FIGURE 52 - FEEDER CABLE INSTALLATION

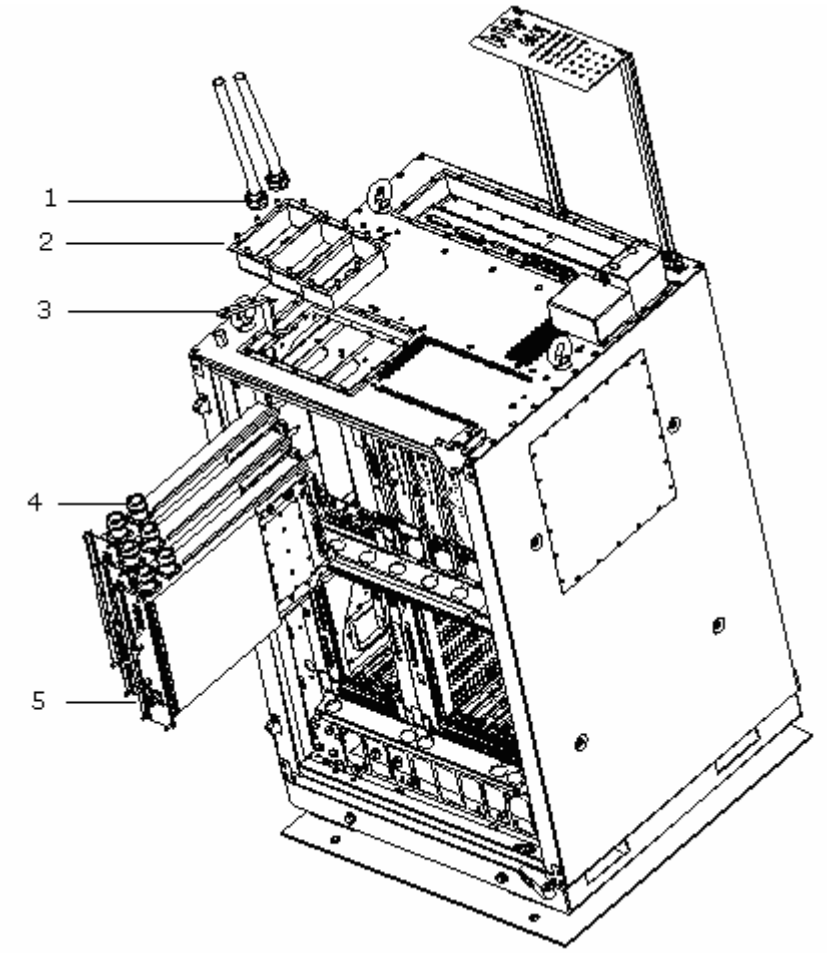

1. Feeder nut
2. Lid
3. Feeder cable installation wrench
4. Feeder cable interface
5. RFE board

This page is intentionally blank

Chapter 5

Monitoring System Installation

This chapter describes monitoring system installation:

- Smog sensor installation
  - Installation procedure
  - Terminal connections
- Temperature and humidity sensor installation
  - Installation procedure
  - Terminal connections
- Infrared sensor installation
  - Installation precautions
- External monitoring cable installation

Note:

- Use all sensors according to engineering design requirements.

Smog Sensor Installation

This section explains smog sensor installation procedure and terminal connections.

Installation Procedure

Install smog sensor on ceiling close to cabinet.

Take following steps to install smog sensor:

1. Separate smog sensor upper and lower parts.

Figure 53 shows smog sensor upper and lower parts.

FIGURE 53 - SMOG SENSOR

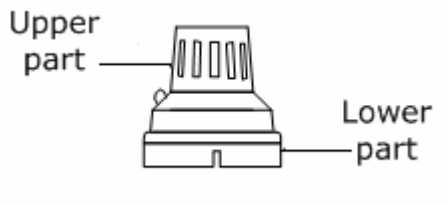

2. Figure 55 shows to connect both red and blue wires of End B to pins 1 and 3 at sensor base.

FIGURE 54 - SMOG SENSOR CABLE

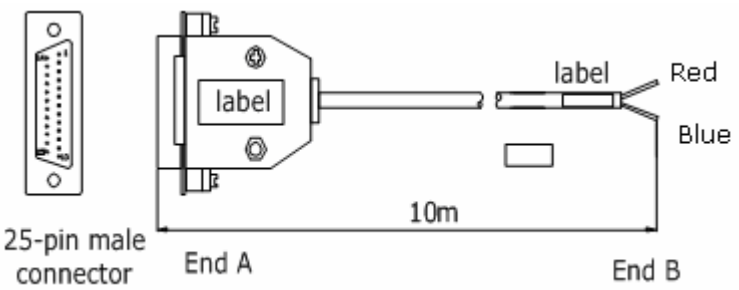

3. Reassemble sensor upper and lower parts.
4. Connect DB25 connector at smog sensor End A to DB25 socket at cabinet top.

Figure 55 shows terminal connections at smoke sensor base.

FIGURE 55 - TERMINAL CONNECTIONS AT SMOKE SENSOR BASE

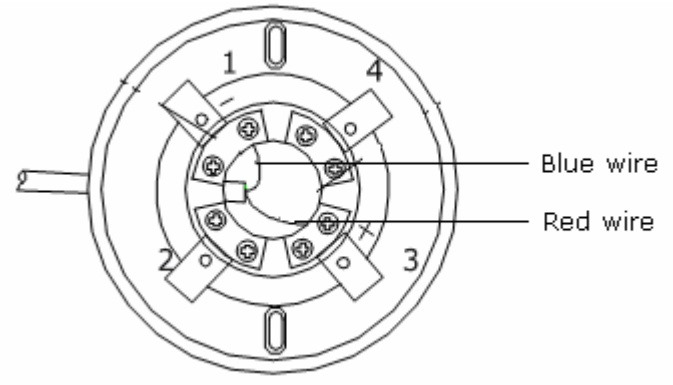

Terminal Connections

Table 15 shows smog sensor terminal connections.

TABLE 15 - TERMINAL CONNECTIONS

Signal	25-pin Male Connector at End A	Cable Color	Smog Sensor Base at End B
+12V	10	Red	3(+)
-12V	11	Green	1(-)

Temperature and Humidity Sensor Installation

This section explains temperature and humidity sensor installation procedure and wiring relationship.

Installation Procedure

Take following steps to install temperature and humidity sensor:

1. Select an appropriate position on the wall and drill a Φ6 hole. Insert a plastic stuffing tube into hole, fasten a tapping screw, and hang sensor through hole.

Figure 56 shows temperature and humidity sensor installation dimensions.

FIGURE 56 - TEMPERATURE AND HUMIDITY SENSOR INSTALLATION (UNIT: MM)

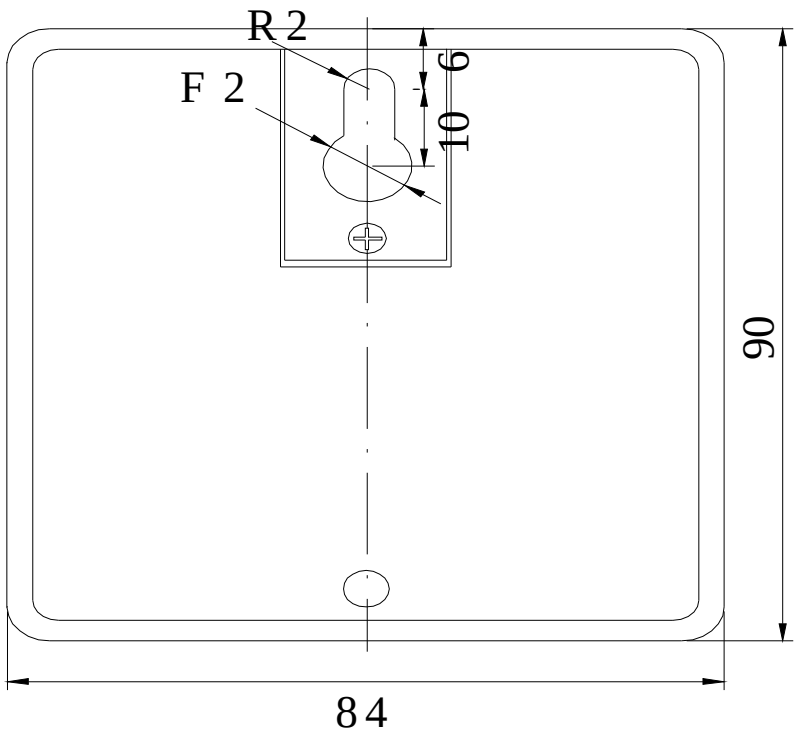

Figure 57 shows that temperature and humidity sensor both ends are DB9 connectors.

2. Connect male DB9 at End A to DB9 socket at cabinet top. Connect female DB9 at End B to temperature and humidity sensor.

FIGURE 57 - TEMPERATURE AND HUMIDITY SENSOR CABLE

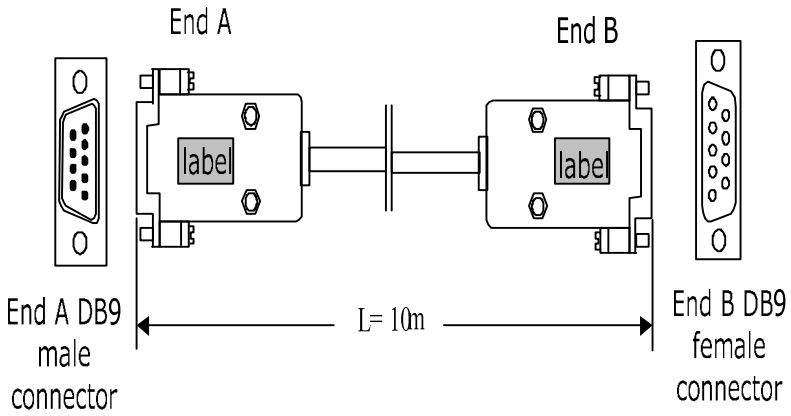

Terminal Connections

Table 16 shows temperature and humidity sensor terminal connections.

TABLE 16 - TEMPERATURE AND HUMIDITY SENSOR WIRING RELATIONSHIP

Signal	Pin No at End A	Cable Color	Pin No at End B
HUM	1	White	3
TEMP	7	Blue	4
GND	3	White	1
+5V	8	Orange	5
Null	6	Shielded wire	Null

Installation Precautions

Following are infrared sensor installation precautions:

- Lay out cables along wall to upper cabling tray or cabling tray under antistatic floor, then to set top.
- Keep cable tail with smooth turn and with no tension.
- Cover PVC cabling tray after cabling.

Infrared Sensor Installation

- Infrared sensor structure

  Figure 58 shows infrared cable sensor cable structure.

FIGURE 58 - INFRARED SENSOR CABLE STRUCTURE

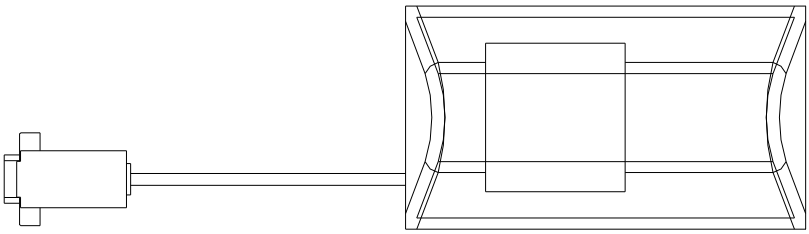

Figure 59 shows infrared sensor dimensions.

FIGURE 59 - INFRARED SENSOR DIMENSIONS

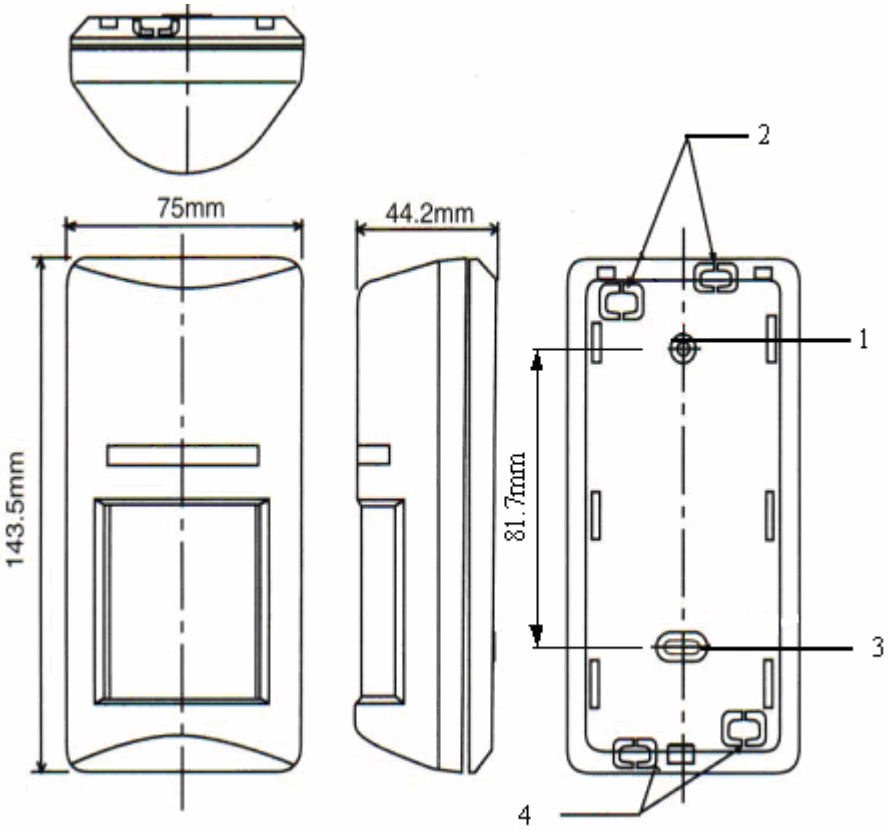

1. Reserved hole
2. Cable outlet
3. Reserved hole
4. Cable outlet

- Infrared sensor installation

  Take following steps to install infrared sensor:

1. Drill two Φ 6 holes on the wall, keep hole depth same as that of expansion bolt, no less than 1.18 inch (30 mm).
2. Ensure line between the two holes is 3.21 inch (80 mm) and is vertical to ground.
3. Hammer expansion bolts into the two holes.
4. Fix infrared sensor to its base. Connect the connection line one end to sensor and other with CBTS monitoring cable B5 terminal DB9 connector.

External Monitoring Cable Installation

Figure 60 shows CBTS external monitoring conversion cable structure.

FIGURE 60 - CBTS EXTERNAL MONITORING CONVERSION CABLE

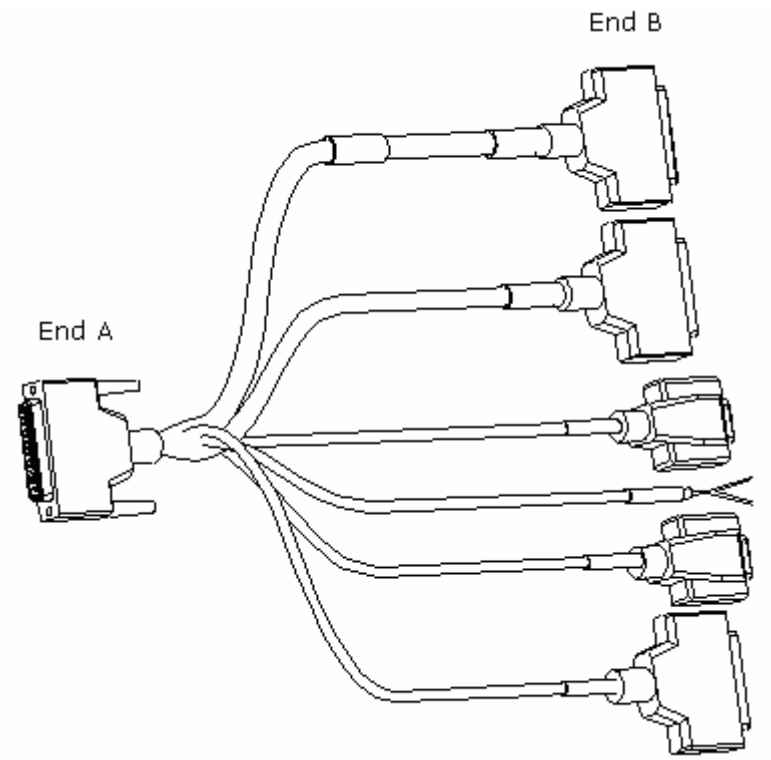

Table 17 describes label details on each socket end.

TABLE 17 - EXTERNAL MONITORING CONVERSION CABLE LABELS

End A	End B1	End B2	End B3
Cable code /A OUT_MON	Cable code /B1~B10 SW_IN	Cable code /B11~B15 CTRL_OUT	Cable code /B16 HUM.TEMP_MON
	B4 end	B5 end	B6 end
	Cable code /B17 DOOR_MON	Cable code /B18 INFRARED_MON	Cable code /B19 SMOG_MON

Connect End A to CBTS cabinet top conversion board ROOM_MON sockets: B1 ~ B3, B5 ~ B6 ends connect to sensor converter.

B1 end is 10 pairs on/off input

B2 end is 5 pairs control output

B3 end connects to the temperature/humidity sensor cable

B4 end connects to the equipment room access control sensor

B5 end connects to the infrared sensor cable

B6 end connects to the smog sensor cable

Note:

- For external monitoring cable details refer to Appendix D.

Chapter 6

Main Antenna Feeder System Installation

This chapter describes main antenna feeder system installation:

- Main antenna system installation
  - Antenna installation preparation
  - Antenna installation precautions
  - Main antenna feeder system structure
  - Antenna installation technical parameters
  - Antenna installation flow chart
  - Selecting installation position
  - Moving and hoisting antenna
  - Uni-directional antenna installation
  - Omni-directional antenna installation
- Main feeder installation
  - Feeder window installation
  - Feeder connector preparation
  - Feeder cutting
  - Jumper installation
  - Waterproofing joints
  - Feeder grounding clip installation
  - Routing feeders
  - Hoisting feeders to tower
  - CBTS grounding system
  - Grounding principles
  - Grounding copper busbar installation
  - Lightning arrestor installation
  - Routing feeders into equipment room

Main Antenna System Installation

Antenna Installation Preparation

Proper antenna installation ensures BSS system reliable operation. Install antenna according to specific network planning engineering design. Install antenna in correct direction, elevation, gain and diversity reception modes including correct tilt and azimuth for each sector. Ensure antennas wind resistance capability maximum up to 150 km/h.

Before antenna system installation, ensure that installation personnel working at tower height are qualified. Inspect installation tools and feeder equipment.

Antenna Installation Precautions

- Take necessary measures for personal and equipment safety.
- Operator on tower must wear safety belt.
- Personnel under tower must wear safety helmets.
- Never climb tower with loose clothes and wet/slippery shoes.
- While active antenna adjustment, wear radiation-shielding clothing and turn off high power amplifier to avoid radiation effects.

Main Antenna Feeder System Structure

The main antenna feeder system consists of:

- Antenna
- Antenna jumper
- Lightning rod
- Lightning grounding clip
- Iron tower
- Main feeder
- Lightning arrestor
- Cabinet top jumper
- Cabling rack
- CBTS cabinet

Figure 61 shows 3-sector antenna feeder system structure.

FIGURE 61 - 3-SECTOR ANTENNA FEEDER SYSTEM

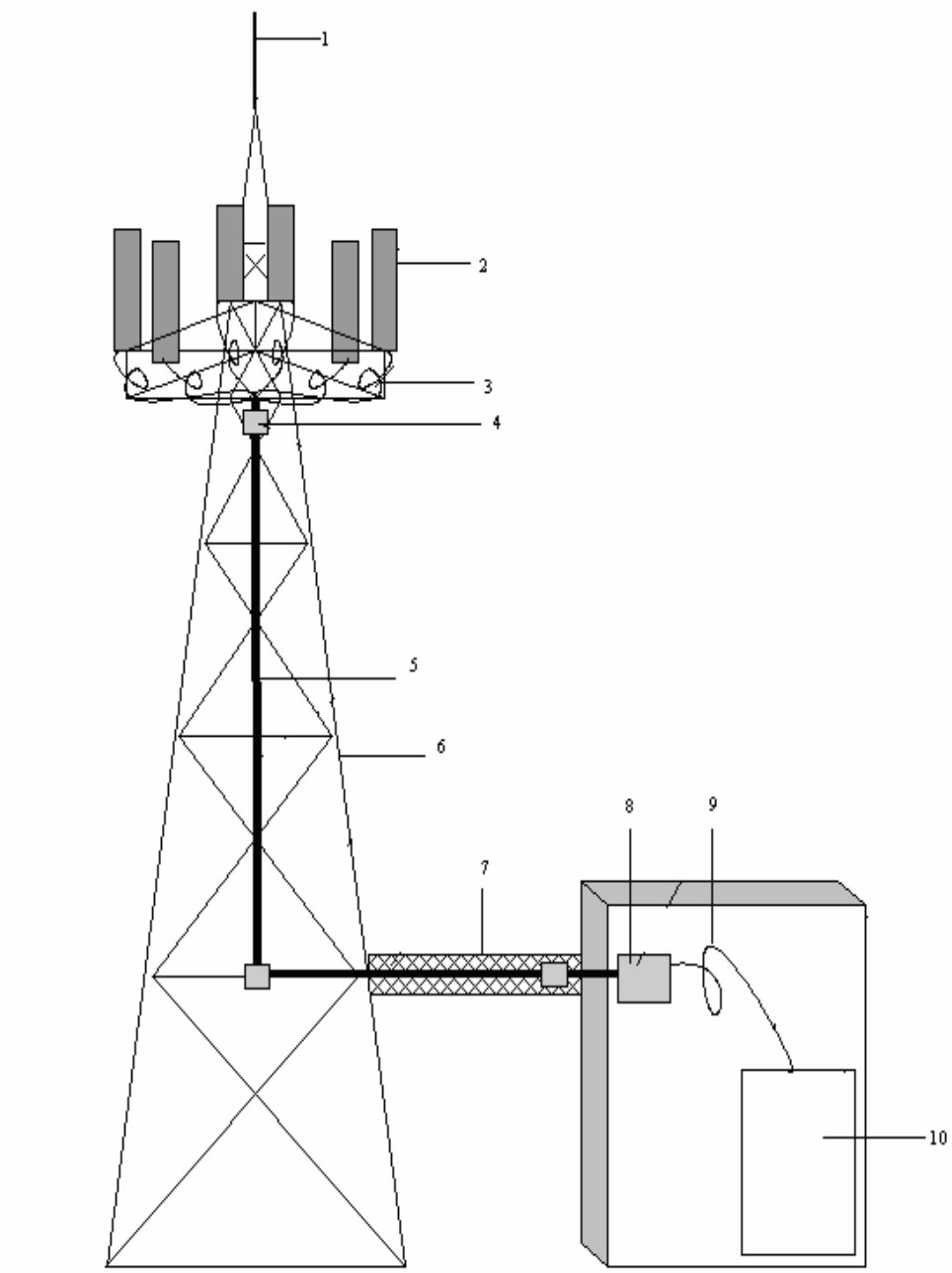

1. Lightning rod
2. Antenna
3. Antenna jumper
4. Lightning protection grounding clip
5. Main feeder
6. Iron tower
7. Cabling tray
8. Lightning arrester
9. Cabinet top jumper
10. CBTS cabinet

Antenna Installation Technical Parameters

- Height

  It depends upon network planning.

- Azimuth

  It depends upon network planning.

- Tilt

  It depends upon network planning and ranges from 0° ~ 10°.

- Antenna direction

  It depends upon antenna azimuth. Two antennas in same sector should point to same direction.

- Spacing between diversity antennas

  Two antennas in same sector act as diversity receiving antennas for each other, and have same vertical height. Maximum horizontal distance (d) between antennas satisfies engineering requirements. Following formula determines value of horizontal distance (d):

  $d \geq 10\lambda - 20\lambda$ (or $H/d = 11$). Unit of measurement: m

  Where:

  d is horizontal distance between diversity antennas.

  H is vertical height from antenna to ground.

  λ is carrier wavelength.

  For example, diversity distance of 1900 MHz carrier must be more than 59.05 inch (1.5 m) while that of 800 MHz carrier must be more than 137.79 inch (3.5 m).

Antenna Installation Flow Chart

Figure 62 shows antenna installation flow chart.

FIGURE 62 - ANTENNA INSTALLATION FLOW CHART

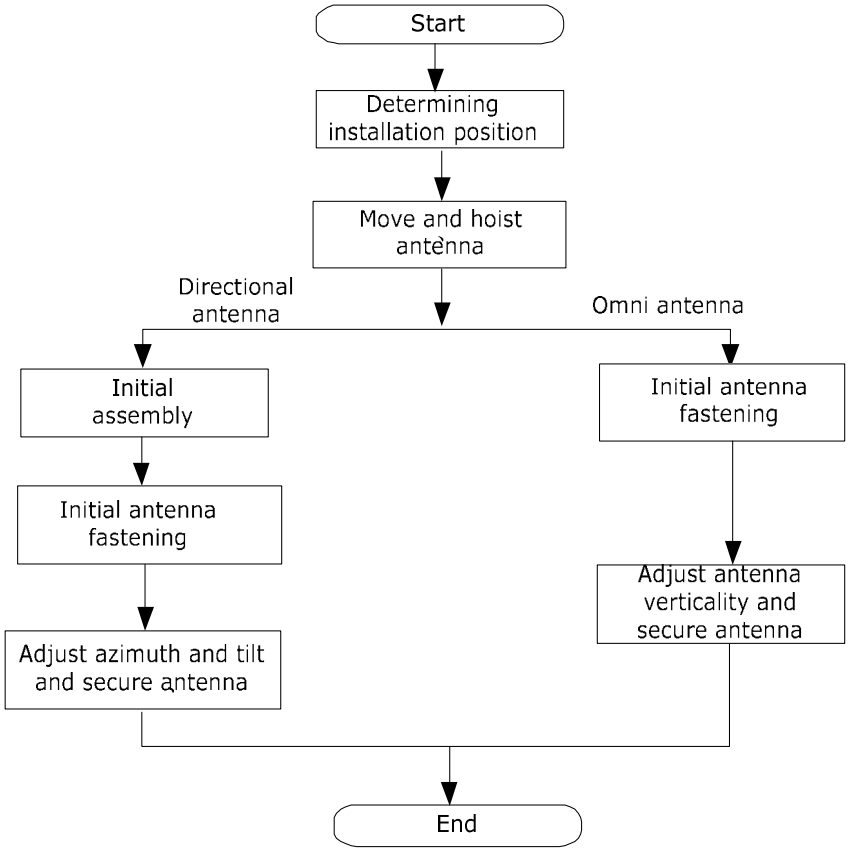

Selecting Installation Position

Select installation position according to engineering design. Incase of failure prepare a secondary engineering design, negotiating with customer and design institute, based on: local coverage requirements, spatial diversity requirements, antenna azimuth and tilt.

Moving and Hoisting Antenna

To mount an antenna on a tower, use rope and pulley block to hoist antenna. Carry antenna jumper and all accessories such as measuring tools, safety belts, adhesive tapes and straps to tower top platform and keep them in a safe place.

Put small metal articles like antenna fixing parts and wrenches in a sealed canvas tool bag before hoisting. Knot rope at both ends of antenna for easy coordination of staff both on and under the tower.

Figure 63 illustrates hoisting process.

FIGURE 63 - HOISTING ANTENNA

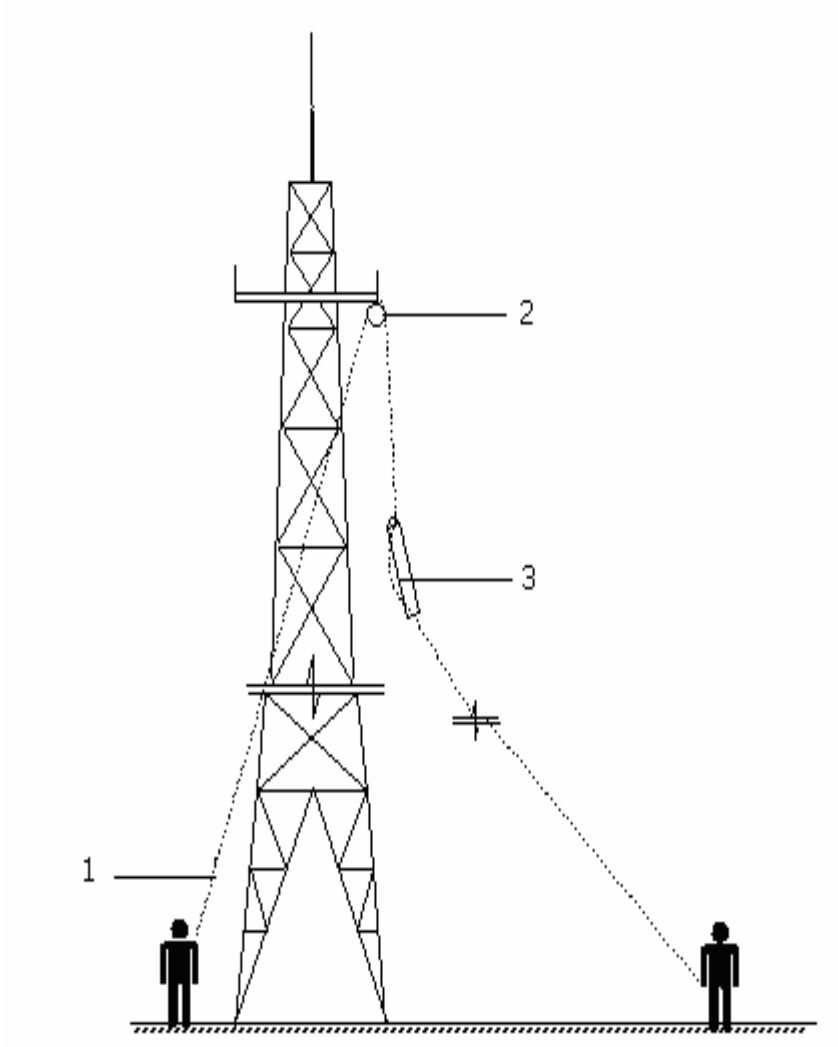

1. Rope
2. Pulley block
3. Knot rope at both ends of antenna

To mount an antenna on roof, move antenna and installation materials to installation position manually.

Caution:

- Personnel on and under the tower should coordinate in hoisting an antenna. Personnel under the tower should pull antenna away from tower body to avoid damage.

Uni-Directional Antenna Installation

This section describes Kathrein antenna installation procedure. Follow installation instructions provided with antenna.

Take following steps to install uni-directional antenna:

1. Assembling antenna accessories

   Directional antenna has a number of installation fasteners. Follow instructions provided along with antenna. For example, Kathrein antenna has two types of fasteners: 738516 and 737974. Before fixing antenna, assemble fastener 737974 to antenna ends and then connect fasteners 737974 and 738516. Install all accessories with spring and flat washers. Fix antenna angle adjustment accessories to antenna under the tower.

   Figure 64 illustrates Kathrein antenna installation process.

FIGURE 64 - KATHREIN ANTENNA INSTALLATION

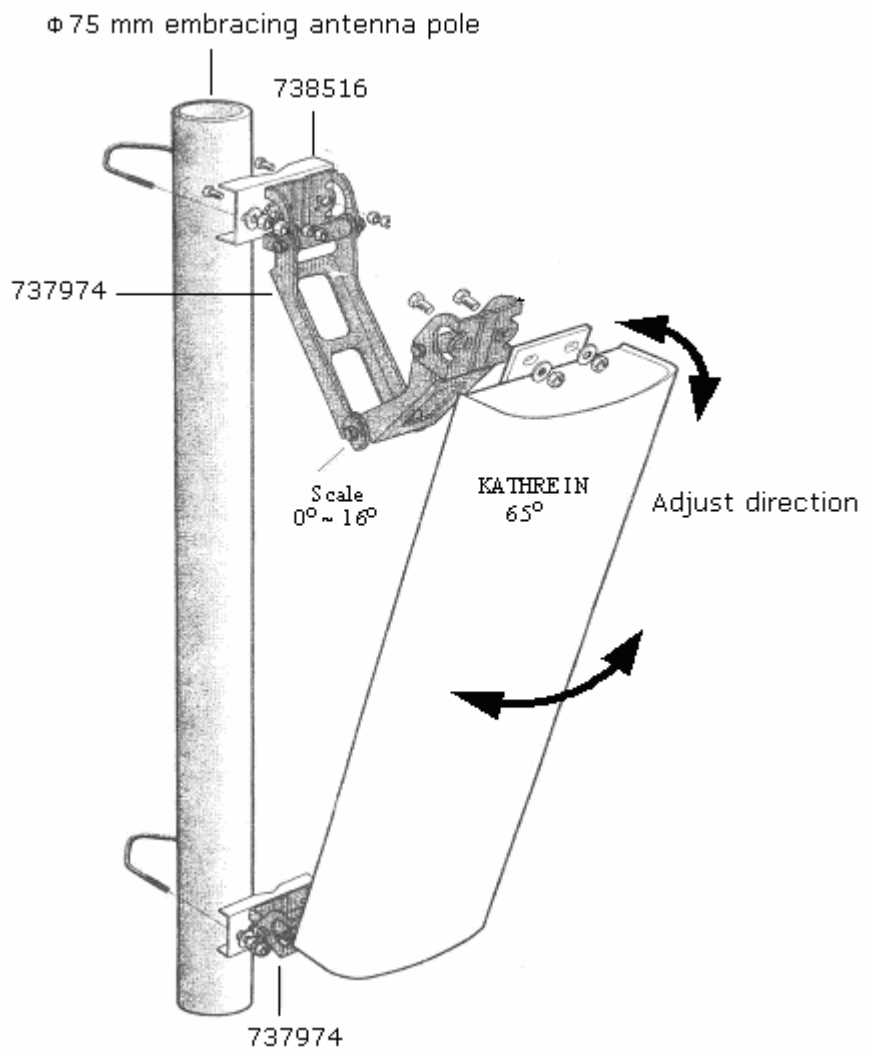

2. Fastening antenna onto the pole

   Fix uni-directional antenna with accessories installed onto antenna pole. Do not tighten screws to facilitate possible azimuth adjustment and tilt.

3. Adjusting antenna azimuth

   Take following steps to adjust antenna azimuth.

   - Determine antenna azimuth using a compass and installation direction according to engineering design drawing.
   - Turn antenna slightly to adjust direction. At the same time measure antenna direction with a compass to minimize error (generally not more than 5°).
   - Tighten fastener 738516, after adjusting antenna azimuth.

4. Adjusting antenna tilt

   - Adjust tilt meter angle required by the engineering design.
   - Turn antenna top slightly and hold antenna from its top. Adjust tilt, till the bead is centered and adjusted tilt meter is next to antenna.
   - After adjusting tilt, tighten the fastener 737974. Figure 65 shows to adjust antenna tilt.

FIGURE 65 - ADJUSTING ANTENNA TILT

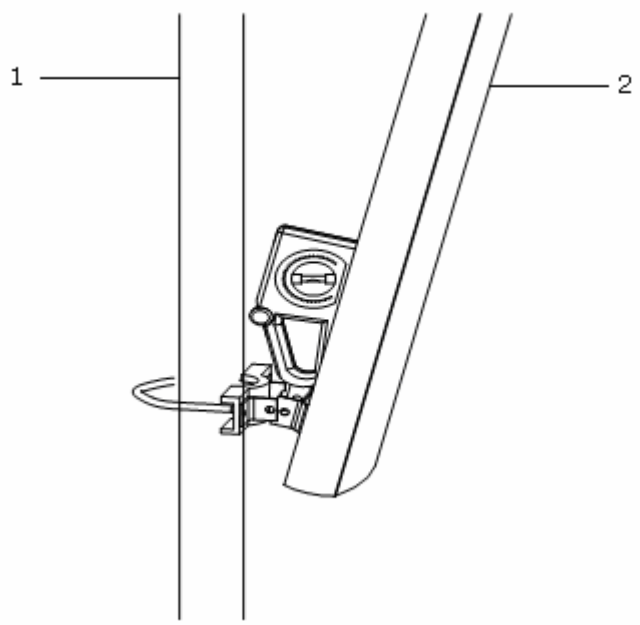

1. Antenna pole 2. Kathrein antenna

Omni-Directional Antenna Installation

Take following steps to install an omni-directional antenna:

1. Put jacket at antenna lower part close to support backbone. Jacket should be flush with or slightly higher than support top.
2. Fix jacket at antenna lower part, support backbone at two points with antenna fixing clips to bear weight and withstand wind. They should not be too loose or too tight to damage antenna jacket.
3. Keep antenna vertical and fix it to antenna pole.
4. Stick the support installed with antenna out of tower platform, and adjust the support to make antenna vertical.

Note:

- To reduce working time at heights and to improve joint connection and waterproof quality. Connect jumper and antenna, and conduct waterproof treatment on the joint before fixing antenna on the pole.

Main Feeder Installation

Install the main feeder properly to minimize signal loss and for reliable function. This section describes 7/8" feeder installation. Figure 66 shows CBTS main feeder overall structure.

FIGURE 66 - CBTS MAIN FEEDER

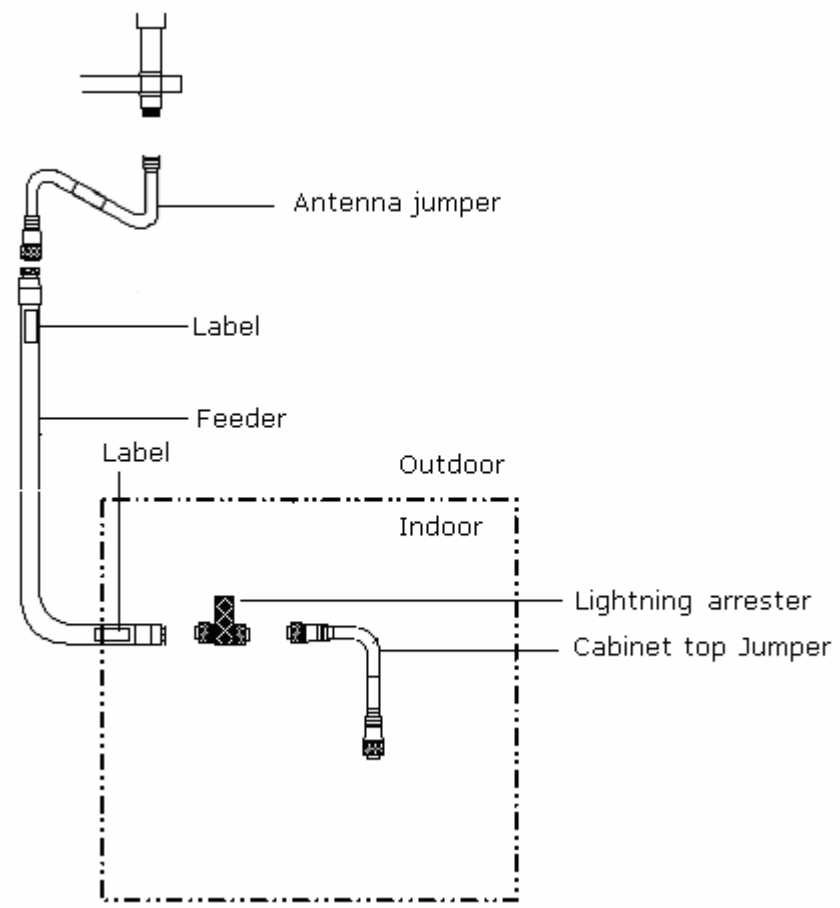

Note:

- ZTE provides feeder windows with dimension 15.74 inch x 15.74 inch (400 mm x 400 mm). It is a four-hole window and allows 12 pieces of feeder cables to pass through. A 11.81 inch x 11.81 inch (300 mm x 300 mm) hole should be made on the wall for its installation.

Feeder Window Installation

Mount feeder window on the wall outside the equipment room between indoor and outdoor cabling racks. To mount feeder window on the roof, proper sealing and water treatment should be ensured.

Figure 67 shows 4-hole feeder window structure.

FIGURE 67 - 4-HOLE FEEDER WINDOW (UNIT: MM)

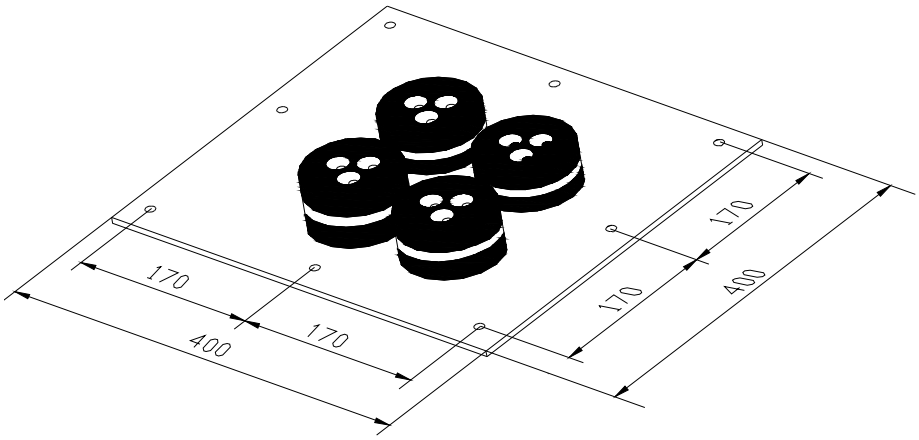

Table 18 lists models and dimensions of all types of feeder window.

TABLE 18 - FEEDER MODELS AND DIMENSIONS

Model of feeder window	Dimensions	Smallest Hole Required	Preferred Hole Recommended
4 hole-5/4″ feeder window	(15.74 x 15.74) inches (400 x 400) mm	(9.44 x 9.44) inches (240 x 240) mm	(11.81 x 11.81) inches (300 x 300) mm
9 hole-7/8″ feeder window	(19.68 x 19.68) inches (500 x 500) mm	(14.17 x 14.17) inches (360 x 360) mm	(15.74 x 15.74) inches (400 x 400) mm
4 hole-7/8″ feeder window	(15.74 x 15.74) inches (400 x 400) mm	(9.44 x 9.44) inches (240 mm x 240) mm	(11.02 x 11.02) inches (280 x 280) mm

Take following steps to install the feeder window:

1. Locate feeder window installation position required by engineering design drawing.
2. Make a cavity on the wall according to the size of the feeder window.
3. Drill holes using a percussion drill and fix the main board of the feeder window with expansion bolts.

4. Install the feeder window sealing washer and sealing cover together while the feeder are indoors.

Feeder Connector Preparation

This section describes procedure to prepare ROSENBERGER 7/8" feeder connectors:

1. Take a feeder connector cutting tool.

Figure 68 shows a common cutting tool used for feeder connectors.

FIGURE 68 - CUTTING TOOL FOR MAKING 7/8" FEEDER CONNECTOR

2. Measure a straight feeder section of about 5.90 inch (150 mm) to be installed with the connector. Cut and strip the feeder sheath at 50 mm away from end.
3. Place feeder at the opening of cutter, keep a length of four corrugations behind main blade, and turn cutter handle to close the opening. The main blade should be right on the wave crest of a feeder corrugation.
4. Turn the cutter in direction as marked till handles are completely closed and internal and external copper conductors of feeder are cut completely. Figure 69 shows that at the same time, auxiliary blade cuts feeder external plastic protection sheath.

FIGURE 69 - CUTTING FEEDER WITH A CUTTER

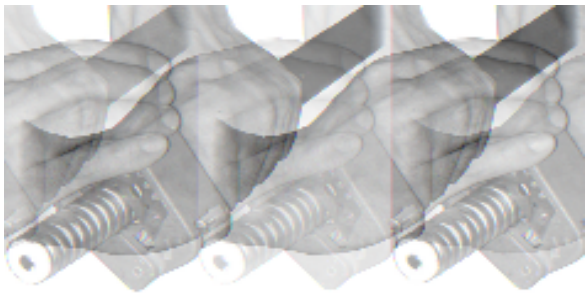

5. Check length of the cut section, Figure 70 shows the cut section length.

FIGURE 70 - CHECKING CUT SECTION LENGTH

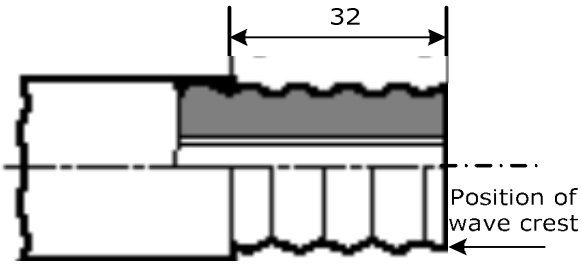

6. Separate front and back parts of feeder connector, and insert back part into feeder till it contacts with the first corrugation of feeder.
7. Firmly insert the cutter tube expander into feeder and turn it left and right to expand feeder external copper conductor, so that it presses against feeder connector back part . See Figure 71.

FIGURE 71 - FEEDER EXPANDING EXTERNAL CONDUCTOR

8. Check for residual copper scraps and the external copper sheath is evenly expanded without burrs. Pull feeder connector back part outward to protect it from slipping away from the feeder.

9. Figure 72 shows to connect feeder connector front and back parts.

FIGURE 72 - CONNECTING FRONT AND BACK PARTS

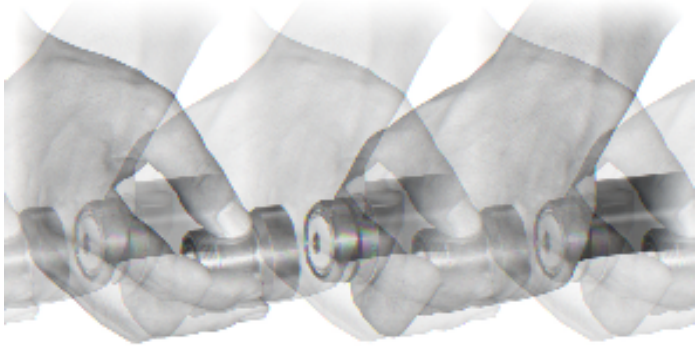

10. Turn the feeder connector front part and fix it with an appropriate wrench, to restrict its movement against the feeder. Figure 73 shows to turn the feeder connector back part with wrench till it fixes.

FIGURE 73 - FIXING FEEDER CONNECTOR FRONT AND BACK PARTS

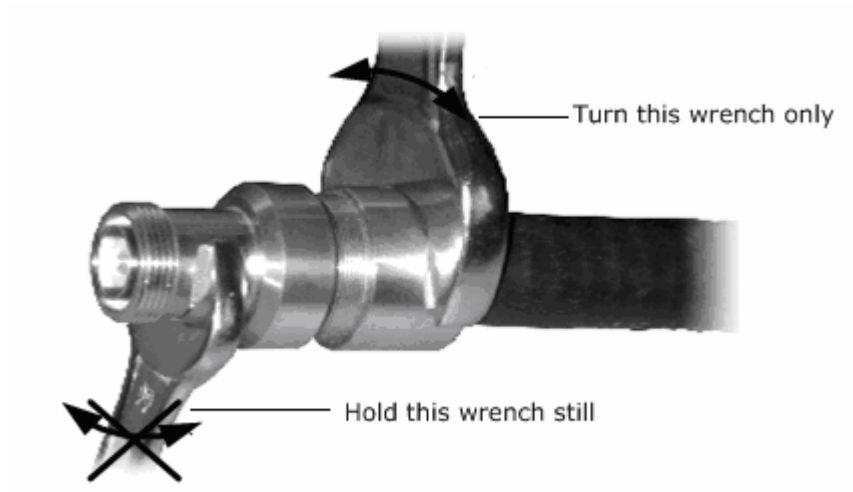

Caution:

- Take care while using cutting tool to avoid serious injury.

Feeder Cutting

Caution:

- While feeder cutting, label its both ends and stick a temporary label to the feeder middle. Labels must be correct to get correct connections and sector matching.

Feeder cutting varies with antenna installation position:

- Roof mounted antenna feeder installation
  - Determine main feeder length in each sector again with a tape measure according to actual route.
  - Add some margin about 0.039 inch ~ 0.078 inch (1 mm ~ 2 mm) to measured lengths when cutting cables.
  - Attach corresponding temporary labels (such as ANT1, ANT2, ANT3, ANT4, ANT5 and ANT6) to both main feeder ends after each cut. Attach formal labels after feeder installation.
- Tower mounted antenna feeder installation
  - Use a roller support, a pulley block and a hoisting rope to lift one feeder end to the tower top. The personnel under the tower must cut feeder sufficient length, to reach lightning arrester frame inside equipment room. Attach a temporary label to the feeder lower part. Attach formal label after the feeder is led into the equipment room.
  - To reduce working time at heights and to ensure feeder connector installation quality, make main feeder upper connector before hoisting it.

Jumper Installation

Make 1/2'' feeders according to specific length of each jumper. Assemble proper feeder connectors on both feeder ends according to feeder connector assembly instructions. Connect jumpers between lightning arrester and rack top.

Follow procedure below to ensure connections are waterproof:

1. Wrap connection starting from the root of the antenna joint with waterproof adhesive tape in same direction as fastening antenna jumper.
2. Stretch waterproof adhesive tape and apply it layer by layer till it reaches about 1.96 inch lower than bottom of feeder joint. Make sure upper layer overlaps lower layer by half the width of tape.
3. Apply PVC tape layer by layer on top of waterproof adhesive tape. Make sure upper layer overlaps lower layer by half the width of tape.

Waterproofing Joints

Use 1/2'' jumper between the antenna and the main feeder for transition. Connect the 1/2'' jumper and the feeder and seal their connectors for waterproof treatment as follows:

1. Connect and fasten the antenna jumper and main feeder connector.
2. Make waterproof treatment on connectors as follows:
   - Cut 7.87 inch (200 mm) long waterproof adhesive tapes.
   - Wrap waterproof adhesive tapes from lower position where the connector is connected, and apply about 7.87 inch (200 mm) long to fill the lower-lying parts of the connector. Figure 74 illustrates this process

FIGURE 74 - WRAPPING WATERPROOF ADHESIVE TAPES (1)

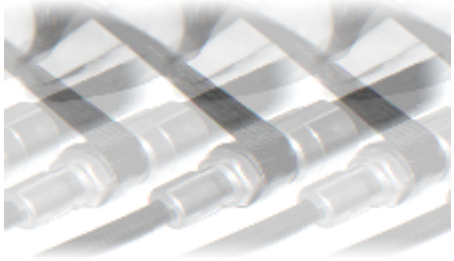

   - While wrapping, extend the adhesive tapes to double their length. Keep wrapping direction same as that of screwing the feeder connector, to avoid the feeder connector to loose.
   - Wrap adhesive tapes layer by layer and also in the reverse direction. Cover upper layer with lower layer about 1/3 to avoid water penetration. Apply the tape with three layers without any cut in the entire process. Wrap the tapes around the feeder connector till they protrude about 0.787 inch (20 mm) from the feeder connector. Figure 75 shows wrapping waterproof adhesive tape.

FIGURE 75 - WRAPPING WATERPROOF ADHESIVE TAPES (2)

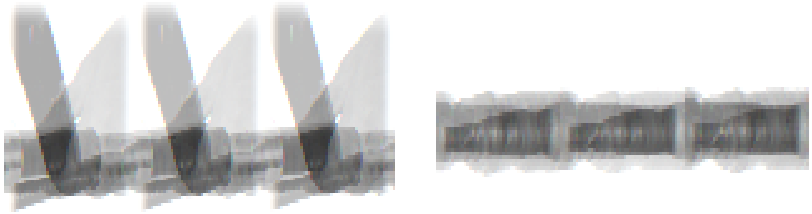

- Grip the waterproof adhesive tapes after wrapping to ensure firm bonding between the tapes and the feeder connectors. Figure 76 shows this process.

FIGURE 76 - WRAPPING 9 WATERPROOF ADHESIVE TAPES (3)

- Apply two layers of PVC tape on top of waterproof adhesive tape. Ensure that the upper layer overlaps the lower layer by half the width of tape.
- Grip PVC tapes and waterproof adhesive tapes to make them tightly adhered to each other.
- To prevent from damage, bundle cable straps tightly at adhesive tape on both ends.

Feeder Grounding Clip Installation

Take following steps to install grounding clip.

1. Prepare required tools including paper cutter, flathead screwdrivers, wrench and sharp-nose pliers.
2. Cut 7/8" sheath according to size of grounding clip.

   Figure 77 shows structure of grounding clip.

FIGURE 77 - GROUNDING CLIP

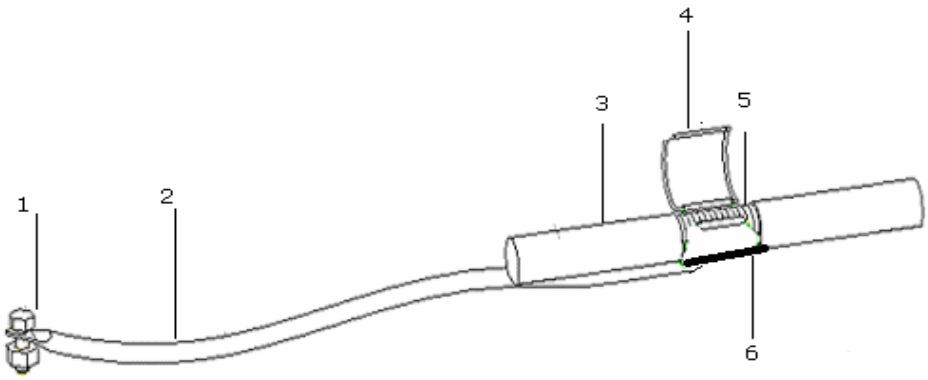

1. Grounding end
2. Grounding cable
3. Feeder
4. Grounding spring lock
5. Feeder external cooper core
6. Grounding cable cooper piece

3. Lay grounding cable up to the ground grid. Avoid bending and folding. Adjust grounding cable according to installation specifications.

Figure 78 shows to improve sealing effect, wrap grounding cable at grounding clip end with waterproof adhesive tape.

FIGURE 78 - WRAPPING GROUNDING CABLE

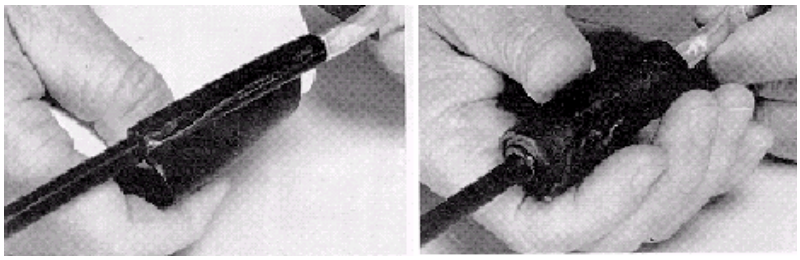

4. Clamp the feeder external conductor with grounding cable copper sheet and locking spring plate.
5. Make joint of grounding clip and feeder waterproof using waterproof adhesive tapes.
6. Connect grounding end of the grounding clip to the main tower body. Remove paint and oxide at connection place, to ensure good electric contact.
7. Connect grounding end of grounding clip to outdoor grounding bar, before laying main feeder into the room.

Caution:

- Don’t install grounding clip in case of any lightning strike.

Routing Feeders

- Feeder routing principles
  - Note down feeder actual route on paper to avoid rework.
  - Rout the feeder neatly without crossing the indoor cabling rack.
  - Rout the main feeder along the outdoor cabling rack and the cabling rack on the tower with no crossing.
  - The minimum bending radius of the main feeder should not be less than 20 times the radius of the main feeder. For one-time bending, the minimum bending radius is 3.54 inch (90 mm). For multi-time bending, the minimum bending radius is 7.87 inch (200 mm).
  - The maximum spacing between feeder clips is 64.96 inch (1.6 m).

- Feeder routing procedure

  i. Install a three-feeder clip every 59.05 inch (1.5 m) (or according to actual installation condition that it is within 64.96 inch) (1.6 m) along tower cabling rack and indoor cabling rack. Keep spacing as even as possible and ensure feeder clips installation direction same. While installing two rows of feeder clips inside same cabling ladder, keep the two rows parallel and arrange them neatly. Figure 79 shows layout of three feeder clip.

FIGURE 79 - THREE-FEEDER CLIP

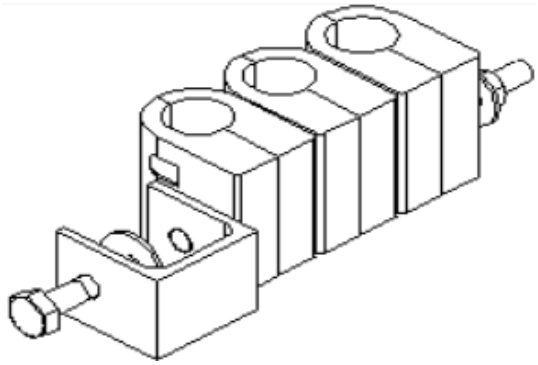

  ii. Sort the feeders roughly in order.

  iii. Fix main feeders from top to bottom and sort them out while attaching with three-feeder clips. Fasten the feeder clips after smoothing the main feeders. Keep main feeders flat and straight.

  iv. Fix the main feeders with three-feeder clips along the outdoor cabling ladders.

Hoisting Feeders to Tower

For a tower mounted feeder, use pulley blocks to hoist it. For the installation, follow the steps below:

1. Ensure that the labels attached at 11.81 inch (300 mm) away from main feeder both ends are correct.
2. Wrap the main feeder connector made under the tower with flax (or antistatic packing bag together with foam) and strap it tightly.
3. Knot and fix the hoisting rope 409.4 inch (1.5 m) away from the feeder connector. It helps the staff both on and under the tower in pulling up the feeder, and prevents the feeder and its connector from colliding with tower during hoisting process.
4. After hoisting main feeder to the tower top, fix upper end at multiple points to prevent it from slipping down the tower.

Figure 80 shows hoisting feeder up to tower.

FIGURE 80 - HOISTING FEEDER UP TO TOWER

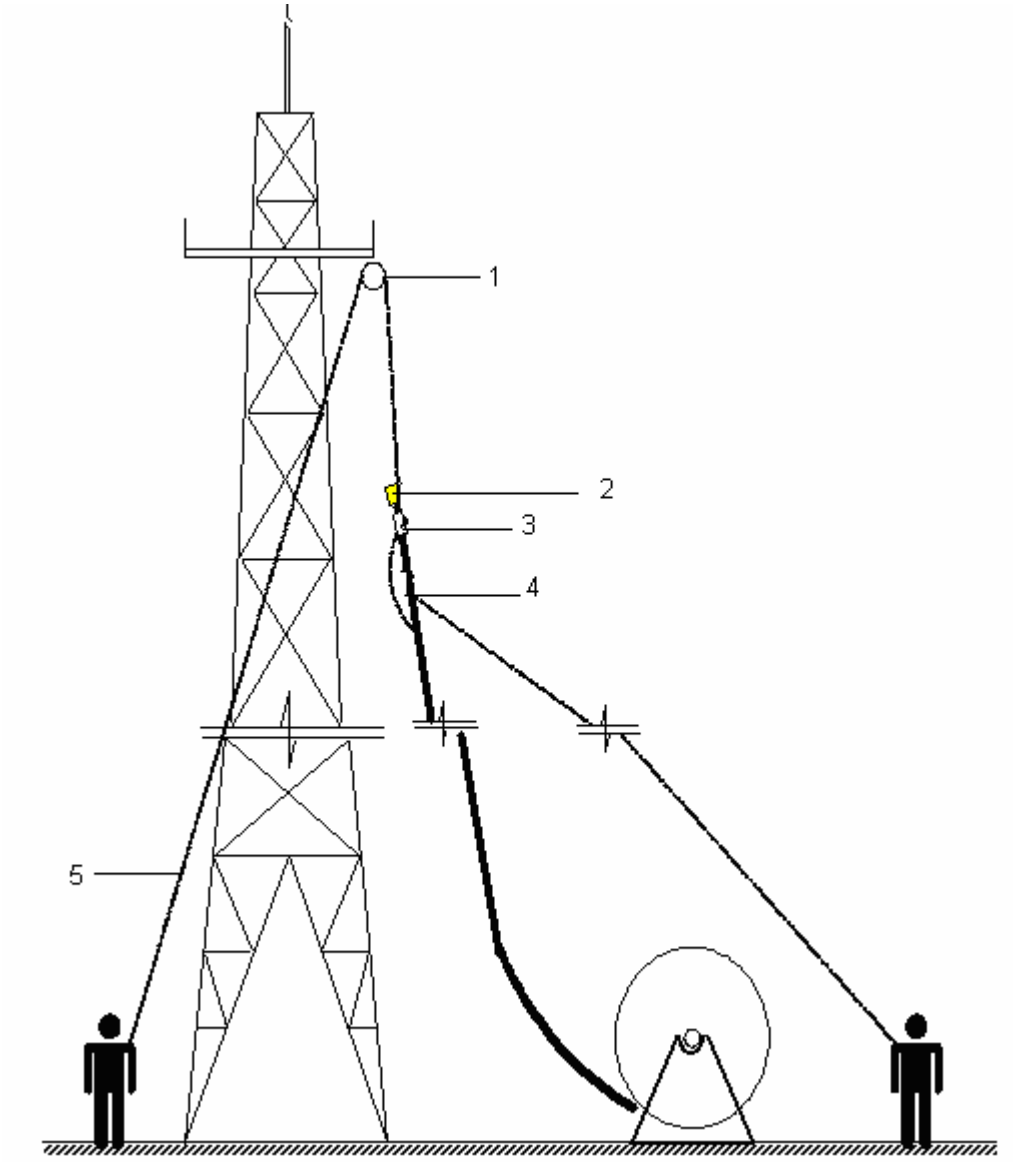

1. Pulley block
2. Feeder connector bundling
3. Feeder label
4. Knotting position in the upward rope
5. Downward rope

Caution:

- Raise feeder with care to avoid damaging its sheath.
- Take care for personal safety when hoisting the feeders.

CBTS Grounding System

Figure 81 shows CBTS grounding system for cable connection.

FIGURE 81 - BTS GROUNDING SYSTEM CABLE CONNECTION

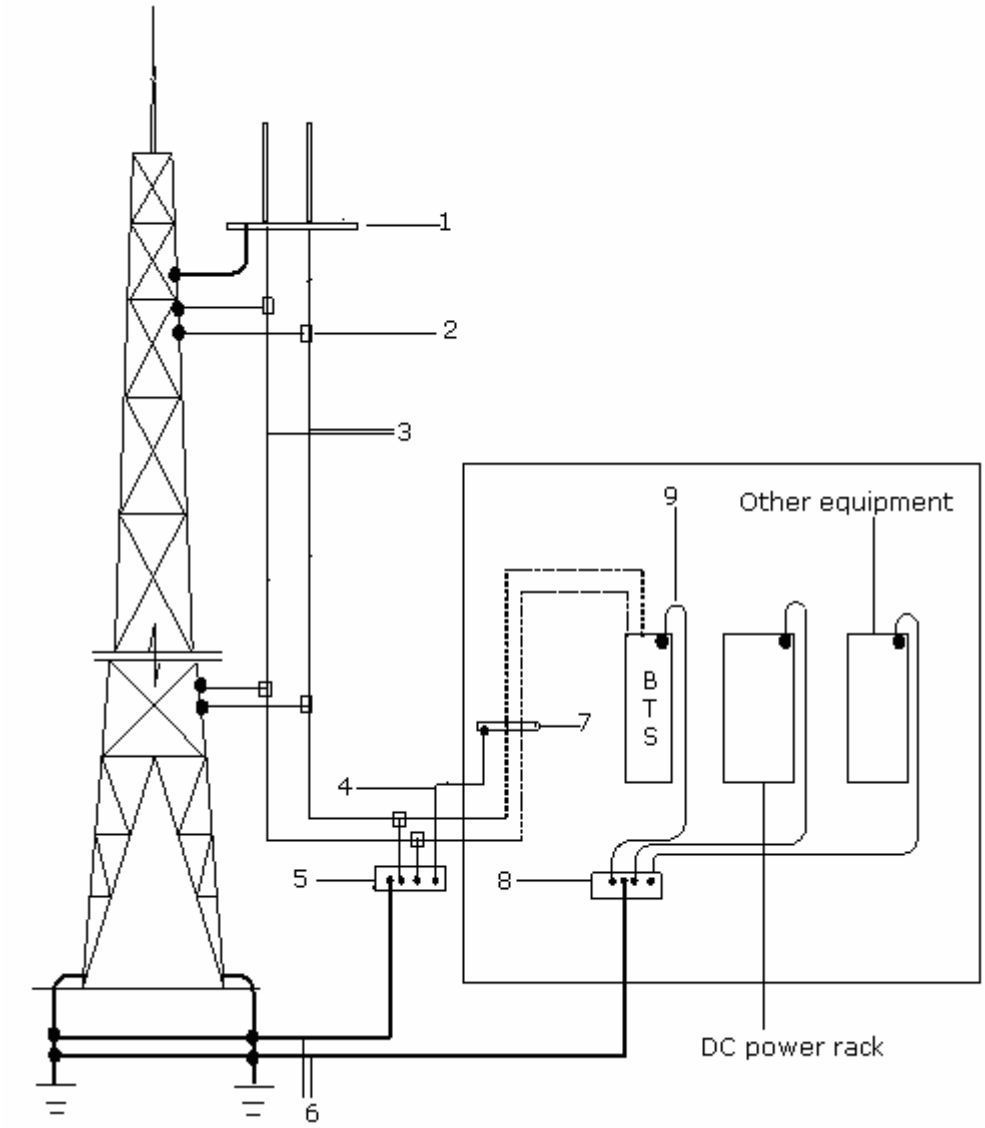

1. Iron tower platform
2. Feeder grounding clip
3. Feeder
4. Grounding cable of lightning arrester rack
5. Outdoor grounding copper busbar
6. Grounding cable (50 mm^2)
7. Lightning arrester
8. Indoor grounding copper busbar
9. Grounding cable (35 mm^2)

Take following steps to connect BTS grounding system cables. Figure 81 shows this process.

1. Connect feeder grounding cable to outdoor copper busbar, before entering into equipment room.
2. Connect indoor lightning arrester ground to outdoor copper busbar through the conductive wire.
3. Connect indoor BTS cabinet protection ground (PGND) to indoor grounding copper busbar.
4. Connect BTS ground (–48 VGND) cable to BTS DC ground terminal.
5. Connect any PGND, inside equipment room (including cabling rack) to indoor copper grounding busbar.
6. Connect indoor copper and outdoor grounding busbars to grounding cable (50 mm^2).

Grounding Principles

Following are grounding principles:

- While iron tower installation, install a grounding clip on feeder at every 787.4 inch (20 m) distance.
- Ground feeder at three positions: where it leaves antenna installation pole, rooftop, and where it enters equipment room.
- Ground, the outdoor cabling ladder provided by network operator.

Grounding Copper Busbar Installation

Figure 82 shows grounding copper busbar structure.

FIGURE 82 - OUTER VIEW OF GROUNDING COPPER BUSBAR (UNITS MM)

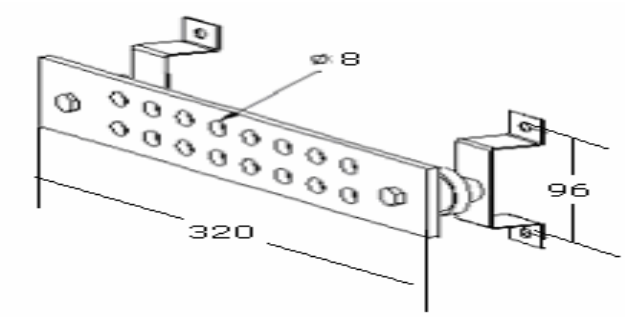

There are two types of copper grounding busbars outdoor and indoor, their installation methods are same.

Determine installation position of feeder window as required by engineering design drawing. Use expansion bolts to fix copper busbar onto the wall.

Lightning Arrester Installation

Take following steps to install lightning arrester.

1. First install lightning arrester on its frame.

   Ensure that, one end is a DIN male connector (DIN-M) and other is a DIN female connector (DIN-F).

2. Fix assembled lightning arrester to cabling rack.

   Connect main feeder and cabinet top jumper to the lightning arrester. Make sure that DIN-M connector, points to main feeder and DIN-F connector, points to connection line from jumper to rack.

3. Install lightning arrester inside the room. Connect its grounding cable to the outdoor grounding copper busbar and insulate lightning arrester frame.

Figure 83 shows lightning arrester installation.

FIGURE 83 - LIGHTNING ARRESTER FRAME INSTALLATION

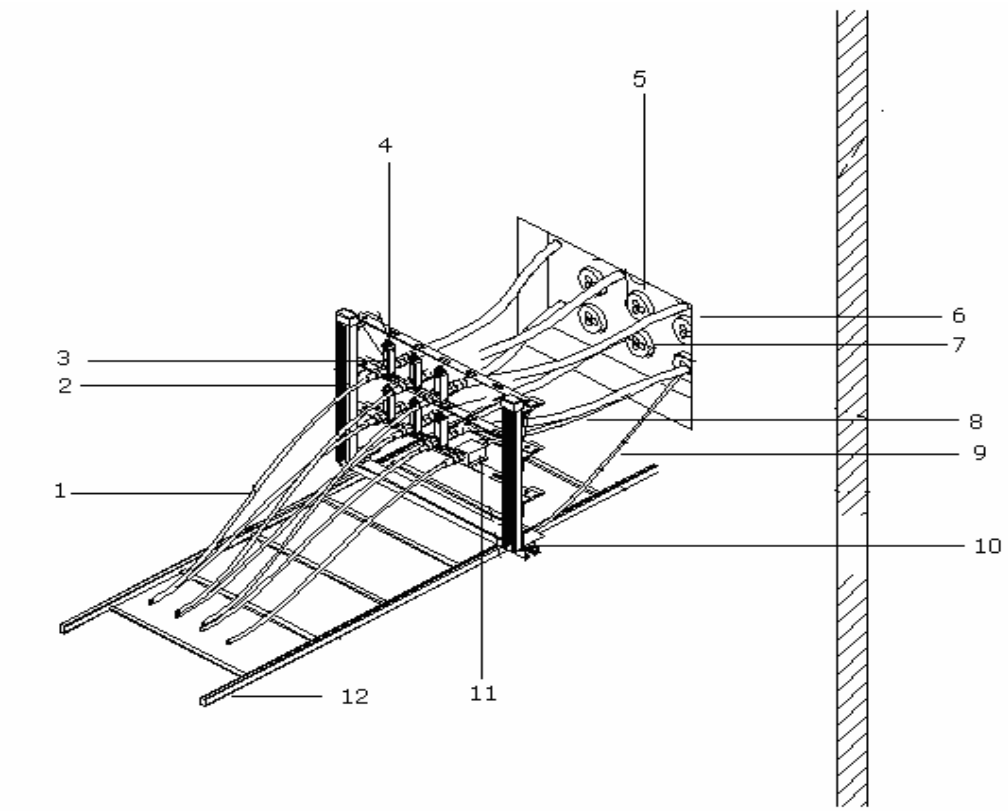

1. Jumper
2. Lightning arrester rack
3. Antenna lightening arrester
4. Lightning arrester fixing plate
5. Feeder window
6. Wall
7. Antenna feeder
8. GPS feeder
9. Grounding cable of lightning arrester rack
10. Insulating tube
11. GPS lightning arrester
12. Cable rack

Routing Feeders into Equipment Room

- Precautions
  - Ensure to avoid rain into the equipment room through feeders.
  - Use cabling racks both indoors and outdoors to guide the feeders

Figure 84 and Figure 85 illustrate feeder route through equipment room.

FIGURE 84 - RUNNING FEEDERS INTO EQUIPMENT ROOM (METHOD 1)

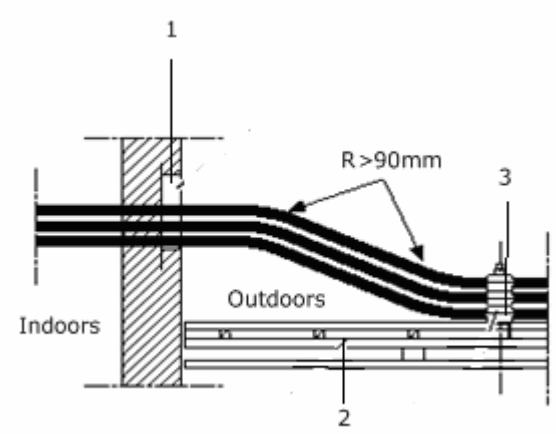

1. Feeder window
2. Cabling rack
3. Feeder clip

FIGURE 85 - RUNNING FEEDERS INTO EQUIPMENT ROOM (METHOD 2)

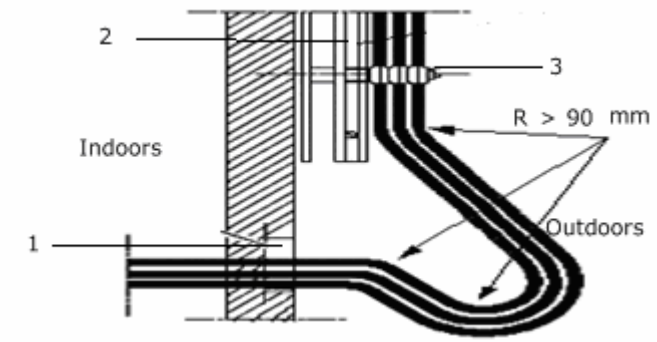

1. Feeder window
2. Cabling rack
3. Feeder clip

- Procedure

  i. Loosen the sealing fixture hoop in the feeder window to a proper degree. Remove the holes covers to run the feeders through.

  ii. Lead the feeders into the equipment room. Avoid damaging the indoor equipment or the feeder while forcing the outdoor feeder. Fasten the fixing hoop after pulling the feeders in place.

  iii. Cut the feeders and ensure that the temporary labels on the feeders are complete before and after feeder cutting. Determine the cutting position according to the present conditions.

  iv. Make the indoor connectors for the main feeders.

  v. Connect the main feeders to lightning arresters.

Note:

- After installing all antenna feeders, conduct SWR test . The SWR should be less than 1.5. Otherwise, check the feeder connector, antenna, feeder and lightning arrester to fix the problem.

This page is intentionally blank

Chapter 7

GPS Antenna Feeder System Installation

This chapter describes GPS antenna feeder system installation:

- GPS antenna feeder system structure
- Installation position and requirements
  - Installation requirements
  - Lightning protection requirements
- GPS connector preparation
  - NJ-9 GPS connector
  - GPS connector preparation procedure
  - GPS connector installation check

GPS Antenna Feeder System Structure

Figure 86 shows GPS antenna feeder system composition.

FIGURE 86 - GPS ANTENNA FEEDER SYSTEM

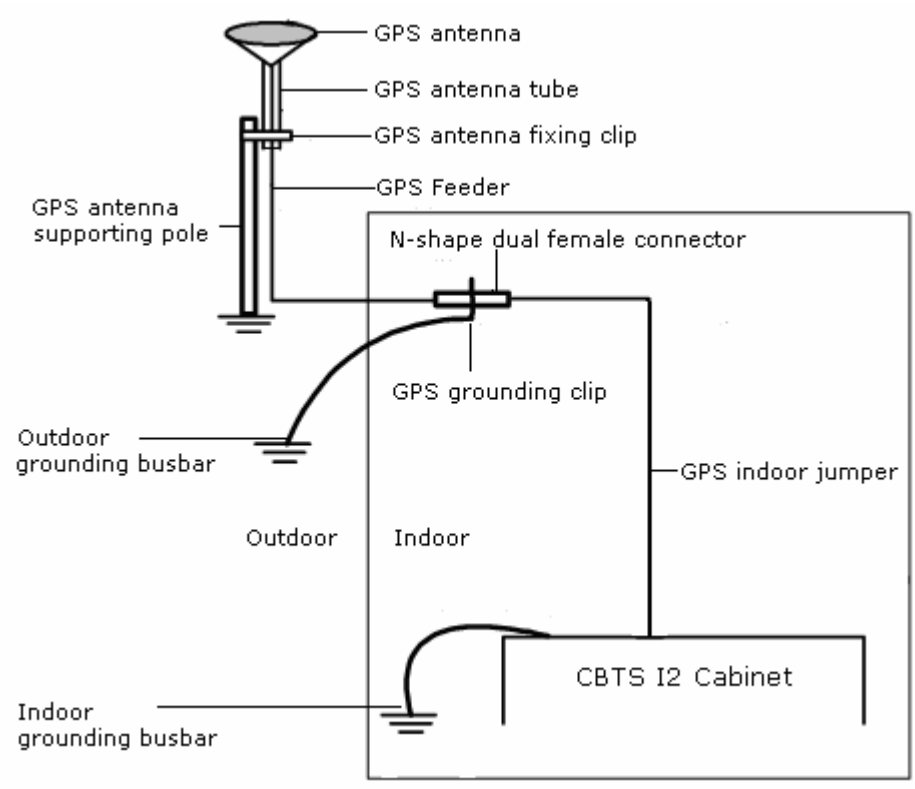

Installation Position and Requirements

There are two types of GPS antenna installation positions:

- Tower Mounted

Figure 87 shows position of a tower mounted GPS antenna.

FIGURE 87 - TOWER MOUNTED GPS ANTENNA

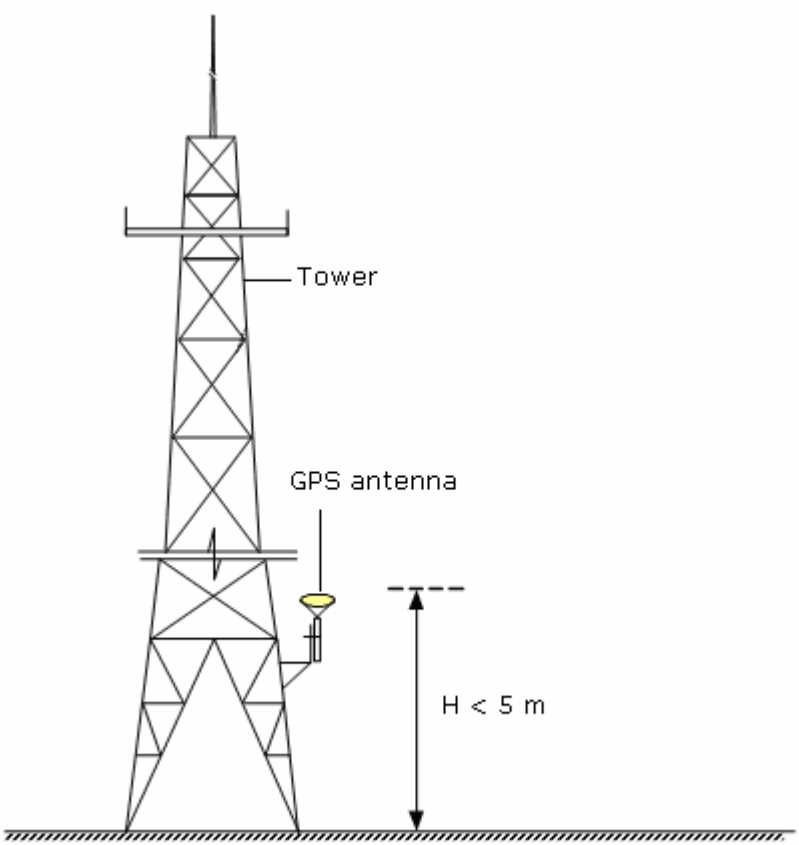

- Roof Mounted

Figure 88 shows position of a roof mounted GPS antenna.

FIGURE 88 - ROOF MOUNTED GPS ANTENNA

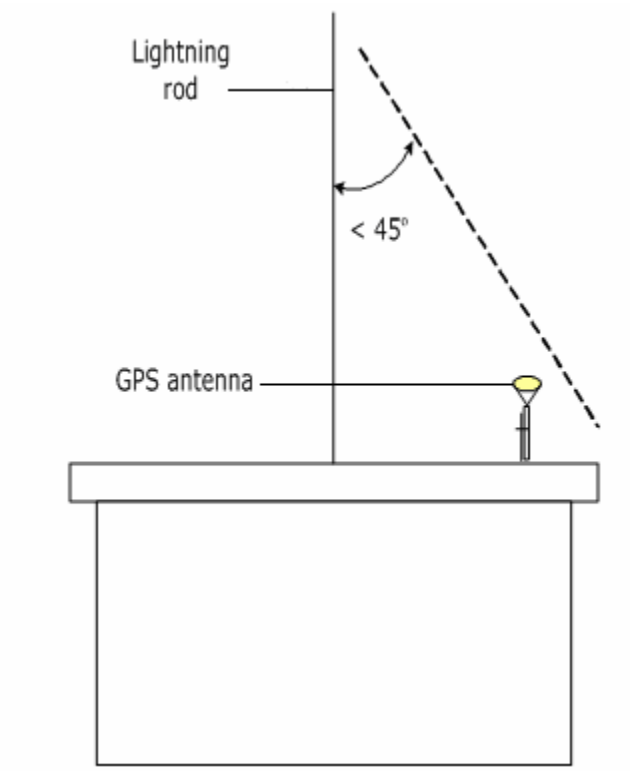

Caution:

- Both installation modes require that no obstacles are present in 150° GPS antenna elevation.

Installation Requirements

Following are GPS antenna installation requirements:

- GPS antenna installation position should have a broader view to track on maximum satellites.
- Keep coaxial cable short to reduce signal loss and lightning induction.
- For a tower mounted GPS antenna, keep horizontal distance between GPS pole and tower up to 11.81 inch (300 mm).
- Do not install GPS antenna under microwave antenna, high-voltage lines, television transmitting tower, or within radiation range of a mobile system antenna.

Lightning Protection Requirements

Following are lightning protection requirements to install a GPS antenna:

- Install GPS antenna within 45° lightning protection coverage area of tower. Otherwise, install a special lightning arrester for the GPS antenna.
- Place GPS antenna away from lightning strikes. If it is tower mounted, install it in a safe place on the roof or in tower lower part.
- Ensure that pole supporting GPS antenna is grounded.

NJ-9 Connector Preparation

This section describes NJ9 GPS connector preparation procedure:

NJ-9 Connector

For GPS feeder cables shorter than 80 m use NJ-9 GPS connector. Figure 89 shows NJ-9 GPS connector.

FIGURE 89 - NJ-9 GPS CONNECTOR

Figure 90 shows NJ-9 GPS connector parts.

FIGURE 90 - NJ-9 GPS CONNECTOR PARTS

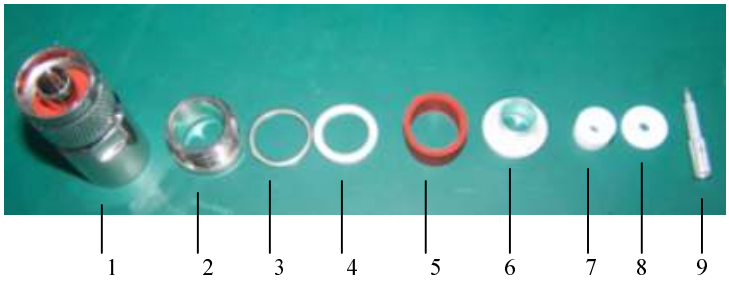

1. Shell
2. Tail connector
3. Air proof washer 1
4. Air proof washer 2
5. Air proof washer 3
6. Insulating washer
7. Insulating washer
8. Insulation plate
9. Inner conductor pin

Connector Preparation Procedure

Take following steps to prepare GPS connector:

1. Stripping GPS cable shell

   Use sharp knife to strip GPS cable outer covers about 0.41 inch ± 0.009 inch (10.5 mm ± 0.25 mm). Avoid damaging inner copper wires. Figure 91 shows stripped cable.

FIGURE 91 - STRIPPING GPS CABLE

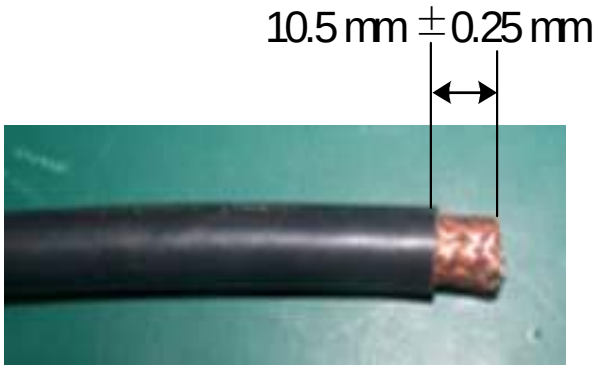

2. Installing connector outer parts

   Assemble all NJ-9 outer parts from left to right on cable. Figure 92 shows external conductor assembly.

FIGURE 92 - EXTERNAL CONDUCTOR ASSEMBLY

   Stretch copper wires back at one end to metal washer. Figure 93 shows white shielded layer after stretching copper wires.

FIGURE 93 - SHIELDED LAYER

   Put sliver coated flange between shielded layer and insulation layer. Finally adjust shielded layer between flange and metal washer. Figure 94 shows inserting external conductor flange.

FIGURE 94 - INSERTING EXTERNAL CONDUCTOR FLANGE

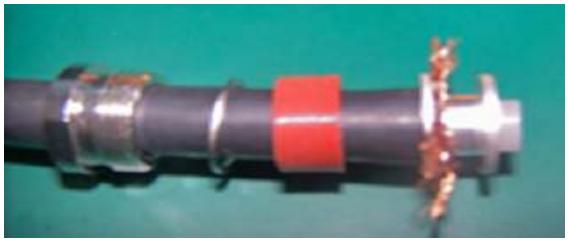

3. Stripping insulation layer

   Strip insulation layer so that copper core appears. Avoid damaging copper core and cut insulation layer at equal lengths. Keep outer copper core length between 0.275 inch ~ 0.287 inch (7.0 mm ~ 7.3 mm) . Figure 95 shows stripping insulation layer.

FIGURE 95 - STRIPPING INSULATION LAYER

Figure 96 shows cable after stripping insulation layer.

FIGURE 96 - AFTER STRIPPING INSULATION LAYER

4. Welding inner conductor pin

   Insert white insulation plate till it touches flange tightly. Figure 97 shows insulation plate insertion.

FIGURE 97 - INSERTING INSULATING PLATE

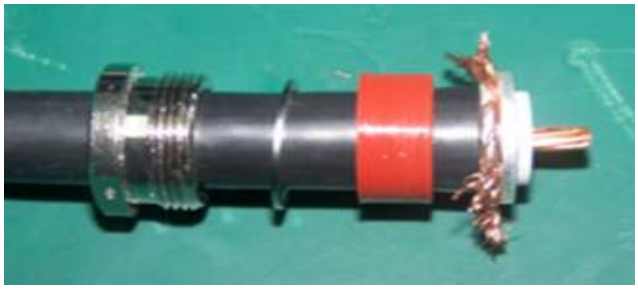

   Melt a very thin layer of tin (Sn) and cover copper core homogeneously. For fixed temperature iron, adjust temperature to 350 degree Celsius and keep it for 10 seconds. For normal iron add more time till tin is melted properly. Insert copper core into pin tail hole. Ensure that pin tail touches insulation plate. Use iron to raise temperature when required. Figure 98 shows welding inner conductor pin.

FIGURE 98 - WELDING INNER CONDUCTOR PIN

5. Cutting Shielded layer

   Use plier to cut copper wires on shielded layer. Figure 99 shows this process.

FIGURE 99 - CUTTING SHIELDED LAYER

   Plug pin into white supporting ring and assemble shell and cable. Figure 100 shows this process.

FIGURE 100 - ASSEMBLING SHELL AND CABLE

6. Shell tightening

   Put a piece of cloth between wrench and shell, use wrench to tighten shell and tail connecting parts. Figure 101 shows this process. Ensure that torque lies in the range of 98 Nm to 120 Nm and pin is at one level throughout the cable.

FIGURE 101 - SHELL TIGHTENING

GPS Connector Installation check

After GPS connector installation check following:

- Pin should be at same level inside the shell.
- Connector strength should be more than 60 N.
- Insulation resistance between pin and shell should be more than 5000 M ohms.
- Check resistance between feeder cable pins and conductors head.
- Check resistance between conductors head.

This page is intentionally blank

Chapter 8

Board Installation

This chapter describes CBTS board installation:

- Installation flow chart
- Installation procedure and precautions
  - CBTS board slot
  - RFS board installation
  - BDS boards installation
  - Installation precautions

Installation Flow Chart

Figure 102 shows board installation flow chart.

FIGURE 102 - BOARD INSTALLATION FLOW CHART

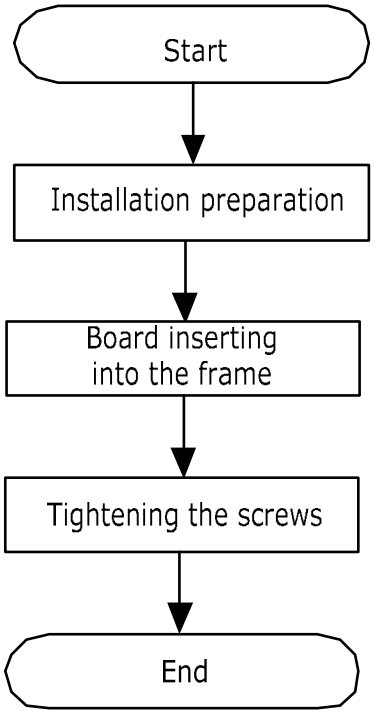

Installation Procedure and Precautions

This section describes board installation in different plug-in boxes.

Caution:

- Ensure power is switched off before board installation. Only TRX and RFE are hot pluggable.

CTSB Board Slot

Figure 103 shows CBTS board slot.

FIGURE 103 - CBTS BOARD SLOT

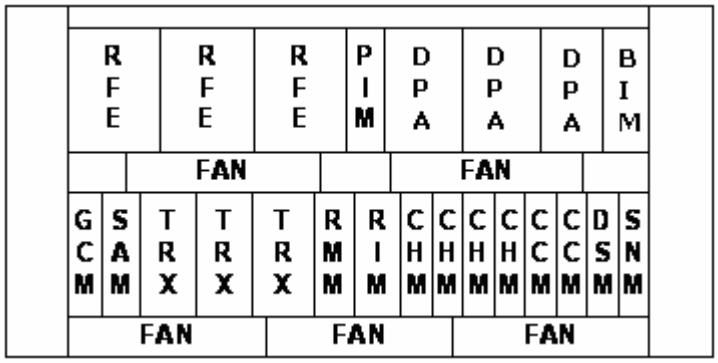

RFS Board Installation

Figure 104 shows RFS board back end for connecting backplane.

FIGURE 104 - RFS BOARD BACK-END

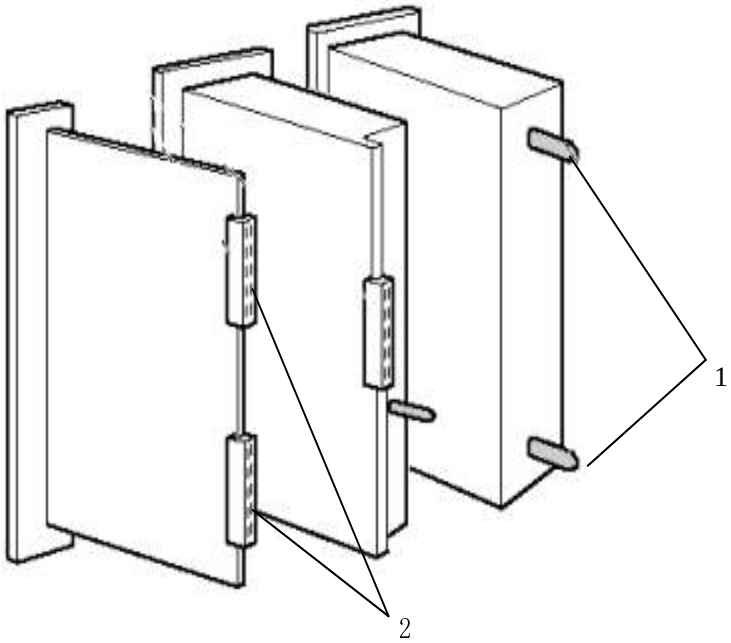

1. Fixed pin
2. Connector

Take following steps to install RFS boards:

1. Wear anti-static wrist straps.
2. Take boards out of anti-static bags and check damaged parts.
3. Select slot position for board installation.
4. Gently insert board vertically along the guide slot.
5. Lock board by pressing down ejector lever.

BDS Board Installation

Take following steps to install BDS board:

1. Preparations

   Before installation, take board out of antistatic bag and check them. If any damages are found, register fault types, and pack them for repair.

2. Board insertion in plug-in box.

   - While board insertion, determine board type and its slot, keep ejector lever in de-locking position. Push board along guide rail slowly into slot. Figure 105 shows to push board along guide rails till it reaches bayonet of extraction tool.

FIGURE 105 - BOARD PLUGGING (STEP 1)

   - Push board forward and turn down extraction tool ejector levers on both sides. A click indicates that extraction tool is in the position and its ejector levers are hooked. Figure 106 shows this process.

FIGURE 106 - BOARD PLUGGING (STEP 1)

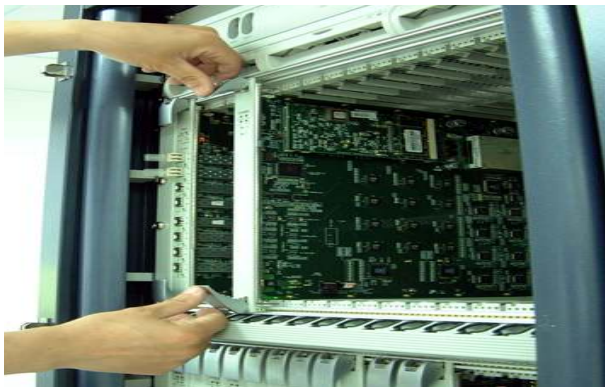

3. Tightening screws

   Tighten captive screws on extraction tools with flathead or Philips screwdrivers. Figure 107 shows this process.

FIGURE 107 - BOARD PLUGGING (STEP 3)

Note:

- To uninstall a board follow the reverse process that of board installation.

Installation Precautions

Take following precautions while board installation:

- Ensure anti-static wrist strap is grounded before operation.
- Ensure that slots for installing boards are consistent with required slots.
- To avoid damage, push boards slowly along the guide rail.

Chapter 9

Hardware Installation Check

This chapter describes CBTS hardware installation check:

- Cabinet installation check
- Cabling rack installation check
- Cable installation check
  - Power and grounding cables
  - Trunk and RF cables
- Board and sensor installation check
- Antenna and GPS feeder system installation check
  - 1/2" indoor jumper
  - Lightning arrester
  - Primary and GPS feeder
  - Feeder window and waterproof curve
  - Three-way feeder clamp
  - 1/2" outdoor jumper
  - Antenna
  - Feeder SWR
- Environment check

Cabinet Installation Check

Check following after CBTS cabinet installation.

- Ensure that cabinet installation location complies with the engineering design drawing.
- Erect cabinet firmly that must resist an earthquake measuring up to 7.0 on Richter scale.
- Ensure that horizontal and verticality error and the gap between adjacent bases is less than 0.11 inch (0.3 m).
- Ensure all other equipment and cabinet front door are in one line.
- Ensure cabinet front and rear parts are at a distance of 39.37 inch (1 m) and 31.49 inch (8 m) away from the walls respectively.
- Ensure that all cabinet components are present.
- Ensure that all cabinet parts are fixed properly.
- Ensure inside cabinet is clean and all screws are tight with flat washers or spring washers.
- Ensure each base is equipped with four insulation spacers and base supporters are consistent with expansion screws holes.
- Ensure small cover plates at cabinet top are pushed forward to cover wire outlets.

Cabling Rack Installation Check

Ensure that:

- Cabling rack location and height meet the engineering design requirements.
- Cabling rack is in good shape.
- Cabling rack is laid out with a grounding cable.

Cable Installation Check

Check following CBTSB cables after installation.

Power and Grounding Cables

Check for following after laying power and grounding cables:

- Ensure that the equipment room power and grounding cables are in accordance with engineering design specifications.
- PGND protective grounding wire on a CBTS cabinet employs 35 mm^2 yellowish green or yellow copper-core cable connected with indoor PGND grounding copper bars.
- Ensure that grounding cable is black copper core cable of 25 mm^2, -48 V power cable is blue copper core cable of 25 mm^2, and grounding bus has a diameter more than 35 mm^2.
- Each grounding point on grounding copper busbar is connected with one piece of equipment.
- Protective grounding and AC neutral cables are laid out separately.
- AC neutral line in power room is independently grounded.
- The outdoor grounding resistance is less than 5 ohm.
- Labels on both ends of power and grounding cables are correct.
- Avoid cable overlapping. All lengthy cables must be shortened or well coiled up.
- Copper lugs on both ends of power and grounding cables are soldered or pressed firmly.
- Entire power and grounding cables are made from one material with no connections in between.
- Grounding busbar is insulated from walls and shortest possible grounding cable is used.
- Connection of power supply to cabinet terminals is correct.
- Insulating protective sleeves are installed on both power supply connecting terminals.
- Power and grounding cables are not damaged.
- Wires at connecting terminals and lug handle are properly insulated.
- Connecting terminals are equipped with flat and spring washers.

Trunk and RF Cables

Ensure that:

- Trunk cable connectors are properly installed, labelled and are not loose.
- Trunk cables have some margin for expansion.
- Cable connector shell is properly connected with grounding system.
- RF cables between modules in cabinet are properly connected.
- Unused connectors are screwed on with a matching terminal.
- RF cables between TRX, HPA and DUP are in parallel and ensure some margin at bends.

Board and Sensor Installation Check

Ensure that:

- Slots for board installation comply with the engineering design.
- Board screws on cabinet are tightened properly.
- Board is properly connected with backplane.
- Temperature and humidity sensor are vertically installed and cables are properly connected to cabinet top.
- Smog sensor is horizontally installed and cables are properly connected to cabinet top

Antenna and GPS Feeder System Installation Check

Ensure that antenna and GPS feeder system are installed according to engineering design specifications. Check for following after antenna and GPS feeder system installation:

1/2” Indoor Jumper

- Indoor jumper is properly connected to terminal on cabinet top.
- Indoor jumpers are tidy, in appropriate length and bound on cabling rack in order.
- Jumpers are laid in layers according to sectors.
- 30 cm straight jumpers are connected between cabinet and a lightning arrester.

Lightning arrester

- RF lightning arrester is connected to feeder connector and fastened tightly.
- GPS lightning arrester 6 mm^2 yellow grounding cable is properly connected with outdoor grounding copper busbar.
- RF and GPS lightning arresters are mounted between two crosspieces of cabling rack without touching cabling rack.
- Lightning arrester is insulated from cabling rack.
- Lightning arrester rack grounding cable is grounded and routed to outdoor grounding bar for reliable grounding.

Main GPS Feeder

- Ensure the main feeder profile is flat and smooth. There are no copper scraps in copper tube. Feeder connectors are connected tightly. Use a special cutter to prepare main feeder connector.
- 7/8" feeder connector is installed properly and tightened well to avoid any abnormal SWR caused by false connections.
- Feeder between the tower top and the equipment room is grounded in at least three points. Grounding points are bound firmly with proper waterproof measures.
- When tower is 2362.20 inch above and needs a longer feeder, place another feeder grounding clip in middle of the tower.
- Feeder grounding clip terminals are fixed on steel plate of a nearby tower.

- Outer grounding copper busbar employs a special reliable path to an underground ground grid. The line width is more than 50 mm^2.
- For a building without a tower, antenna feeder ground at top is connected with nearby lightning protection ground grid on the roof.
- Feeder grounding cable is led from top to bottom. Separation angle between feeder and grounding cable is no more than 15°.
- Feeder cabling has no crisscrossing. Cables are arranged properly without twists and turns.
- Minimum bending radius of feeder is no more than 20 times the feeder radius, and bending radius of main feeder is more than 11.81 inch.
- Main feeder cabling is well planned. Main feeders within a sector are arranged in a row and column consistently.
- Two name labels are bound on both feeder terminals, to ensure that feeders correspond to antennas with corresponding lengths on a feeder name plate.
- There is no dry joint in soldering GPS core wire.
- GPS copper core and outer layer are not short-circuited.
- GPS feeder connectors are tight.

Feeder Window and Waterproof Curve

- Feeder window is fixed on indoor wall and feeder hole faces outdoors.
- Glue injection hole is sealed upward and window boards are installed on indoor wall.
- Feeder window installed at building top is well sealed.
- Necessary waterproof bents are made. Lowest point of waterproof bend is 3.93 inch ~ 7.87 inch (100 mm ~ 200 mm) lower than lower edge of feeder window.
- Feeder cable minimum bending radius is 20 times the semi-diameter of feeder cables. Bending radius of primary feeder cables is more than 11.81 inch (300 mm).

Three – Way Feeder Clamp

- Three-way feeder clamp is fixed on outdoor cabling rack.
- Intervals between feeder fixed clips are even and in same direction.
- A feeder clamp is installed every 59.15 inch (1.5 m) on primary feeder.

1/2” Outdoor Jumper

- Antenna and 1/2" jumper, 1/2" jumper and main feeder are properly connected, connector threads are tightened and wrapped with waterproof adhesive tape.
- Jumper and antenna are parallel to each other with 11.81 inch (300 mm) distance in between at the joint.
- All outdoor jumper connectors are made waterproof and jumper is equipped with a waterproof curve.

Antenna

- Antenna support and tower are properly installed.
- Antenna model is according to networking planning design.
- Actual hanging height of an antenna is according to network planning design.
- RF and GPS antennas are included in the protection area of a lightning arrester (area within 45^0 down tilt from lightning arrester).
- Azimuth of antenna is according to network planning. Azimuth error of directional antenna is no more than 5^0.
- Actual mechanical down tilt of an antenna is according to network planning and two uni-polarization antennas have same down tilts.
- Actual electrically controlled down tilt of an antenna is according to network planning and two uni-polarization antennas have consistent down tilt.
- All antenna poles are firmly installed and properly grounded. Vertical error is less than 2^0. All antennas must be vertical to ground.
- Receive/transmit horizontal interval of an omni-directional antenna is not less than 137.79 inch (3.5 m).
- An omni-directional antenna is at least 59.05 inch (1.5 m) away from the tower while a directional antenna is at least 39.37 inch (1 m) away from the tower.
- While installing an omni-directional antenna on a roof, horizontal interval between omni-directional antenna and antenna lightning arrester is not less than 98.42 inch (2.5 m).
- An omni-directional antenna installed on a roof avoids blind area.
- Main diversity antennas match each other within the sectors and the set top jumpers on the rack.
- Diversity distance is 137.79 inch (3.5 m) for 800 MHz system, 59.05 inch (1.5 m) for 1.9G system, and 263.7 inch (6.7 m) for 450 MHz system.
- Vertical interval between directional antennas within different sectors, installed on same antenna support is more than 23.62 inch (0.6 m).
- GPS spatial angle is more than 90^0.

- While installing GPS antenna on building top, it is equipped with an independent lightning arrester.

Feeder SWR

- SWR is measured after antennas and all feeders are installed.
- Indoor 1/2" jumper terminal is connected with an SWR tester for testing. SWR should be less than 1.5.
- Related Voltage Standing Wave Ratio (VSWR) value is specified, and a VSWR test diagram is available.

Environment Check

Ensure that:

- Outdoor engineering wastes are cleaned after the installation is over.
- Front and rear doors and cabinet sides are cleaned.
- Clean all fingerprint and other stains on cabinet surface.
- Indoor unused materials are put away. Material in equipment room is kept in order. Everything indoor is clean and tidy.
- Any engineering waste materials are disposed off. Leave no cable clips or sundries at the installation site.

Chapter 10

Power On and Off Mechanism

This chapter describes:

- Power supply inspection
- Power-on procedure
  - First time power-on
  - Normal power-on
- Power-off procedure

Power Supply Inspection

Check following requirements before powering up a system.

- Power supply range is according to engineering requirements.
- AC and DC power supply cables are correctly installed.
- PWS input and output power supply cables are connected correctly.
- UPS cable is correctly installed and provides voltage in range of –43.2 V DC ~–56.5 V DC.
- System grounding is provided.
- Power supply switch is at OFF position.
- All cables are according to specified labels.

Caution :

- If anything goes wrong in any of below steps, shut down power supply immediately, find fault and repeat the step again. Do not power on cabinet until fault is removed.

Power-on Procedure

Following section describes procedure for first time power–on and normal power-on.

First Time Power-on

Take following steps to power-on CBTS for the first time.

1. Turn on main AC power switch and check D-level lightning protection indicators.
2. Insert six rectifier boards (PRM) one by one and check output DC voltage range. Unplug rectifier boards, if indicators show normal status. Leave only one PRM board and insert PMM board.
3. Turn on CBTS power supply switch. Insert boards and check if boards are powered on then unplug boards.
4. Turn on power amplifier (PA), if status is normal then turn off amplifier.
5. Turn on Uninterrupted Power Supply (UPS), if no warning indicators are on then turn UPS off.
6. Insert all PRM boards.
7. Finally turn on UPS.

Normal Power-on

Tale following steps to power-on CBTS normally:

1. Turn on -48 V main power switch.
2. Turn on PWS AC power input switch.
3. Turn on the UPS switch.
4. Finally, turn on power amplifier (PA) switch.

Power-off Procedure

CBTS power-off procedure is reverse of power-on procedure. Take following steps to power-off CBTS:

1. Turn off power amplifier (PA) switch.
2. Turn off UPS switch.
3. Turn off PWS AC power supply switch.
4. Finally, turn off -48 V main power switch.

This page is intentionally blank

Appendix A

Packing, Storage and Transportation

This appendix describes:

- Packaging
  - Cabinet packing
  - Cabinet packing procedure
  - Board packing
  - Board packing procedure
  - Base packing
  - Engineering material packing
- Transportation
- Storage

Packaging

Following sections describes packing cabinet parts in a wooden box.

Cabinet packing

Figure 108 shows wooden box to pack cabinet.

FIGURE 108 - WOODEN PACKING BOX FOR CABINET

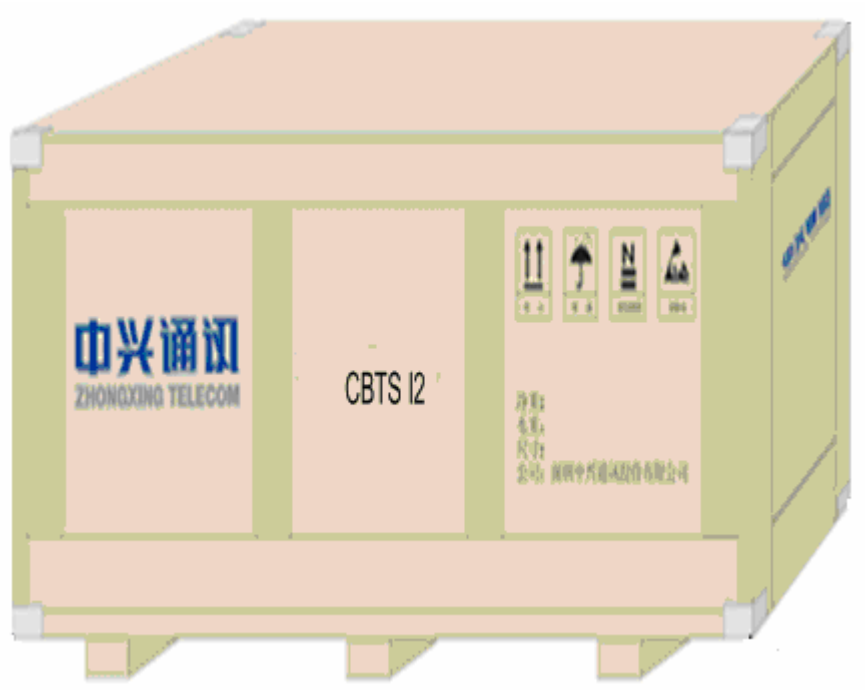

Pack RFE board in a paper packing box made for RFE boards. Pack TRX and HPA boards in a universal paper packing box. Pack power board in a universal paper packing box for parts. Pack the base in a paper packing box made for base and put in a wooden packing box for parts.

Figure 109 shows wooden box used for packing parts. Pack engineering accessories in a universal external paper packing box and put them in a wooden packing.

FIGURE 109 - WOODEN PACKING BOX FOR PARTS

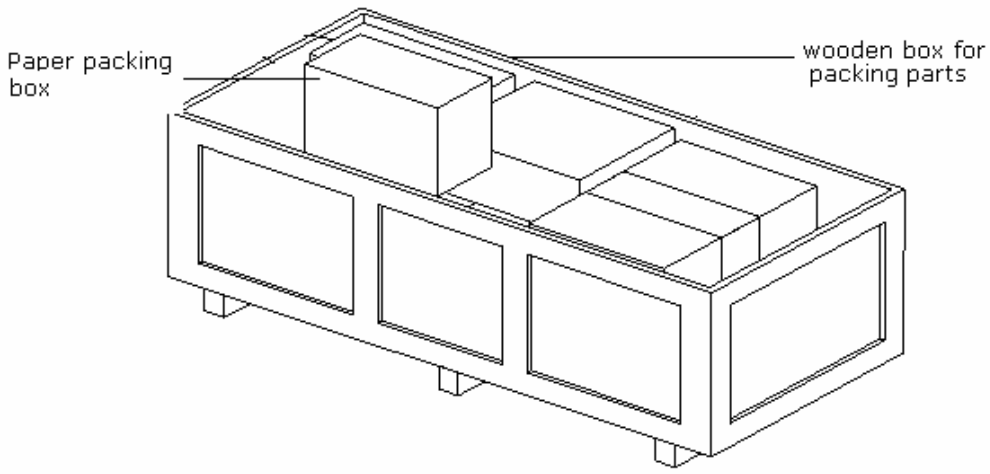

Cabinet Packing Procedure

Follow procedure below to pack a cabinet:

1. Blow away dirt from cabinet and clean it with ethyl alcohol.
2. Put dustproof caps onto DB9 socket and N-type socket at the set top, SAA socket and DB25 socket at E1 cable set top, and 17W2 female sockets at the HPA layer.
3. Lay cabinet onto the ground covered with a foam cushion, with cabinet door upward. Lower hook of an electric crane to a proper location. Put nylon rope on the hook around four hanging points. Hoist the hook to lift cabinet.
4. Open aluminum foil compound film bag and put cabinet into the bag.
5. Put a cushion into a wooden packing box, push wooden packing box until it is under the hoisted cabinet and put the cabinet slowly into the wooden box.
6. Put desiccant bags into aluminum foil compound film bag. To wrap cabinet tightly by aluminum foil compound film bag, extract air in the bag with a cleaner. Seal the aluminum foil compound film bag.
7. Put cushions around cabinet and put cabinet into a wooden packing box for cabinets, Figure 110 shows this process.

FIGURE 110 - CABINET PACKING

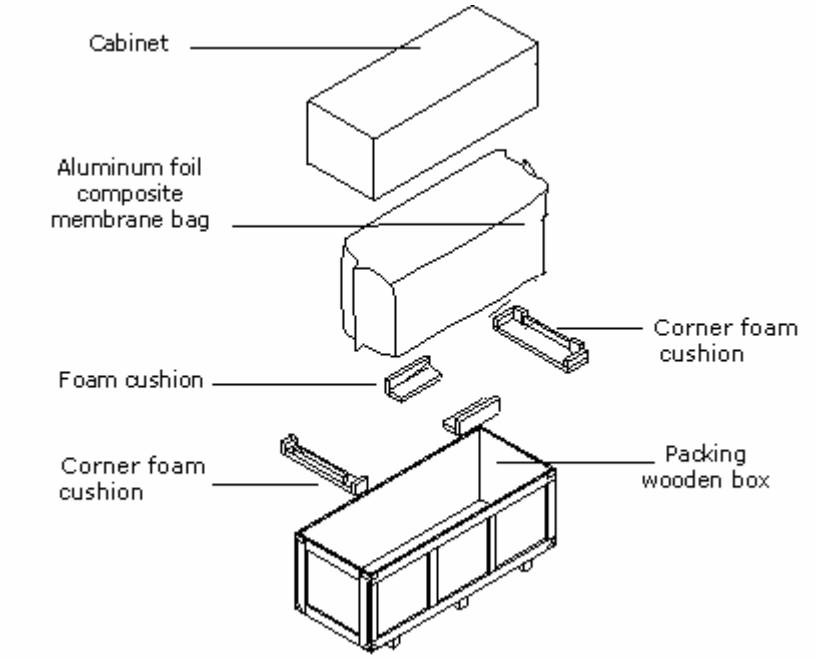

8. Seal a wooden packing box for cabinets. Put cushions around rack, cover the box and drive nails into wooden case. Figure 111 shows sealing a box.

FIGURE 111 - SEALING A BOX

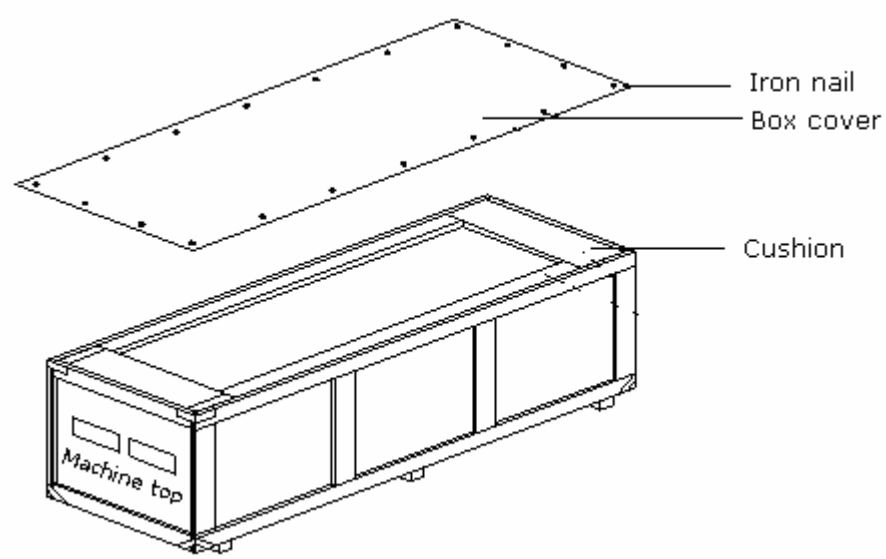

Board Packing

Before packing a CBTS cabinet ensures to dismount heavy boards such as RFE-DUP, RFE-DIV, HPA, TRX and PPM from the cabinet, which are packed separately.

Board packing procedure

- RFE, TRX and HPA Packing

  Figure 112 shows that these boards are packed inside a packing foam box first and then put in the packing boxes.

FIGURE 112 - INNER PACKING FOAM BOX

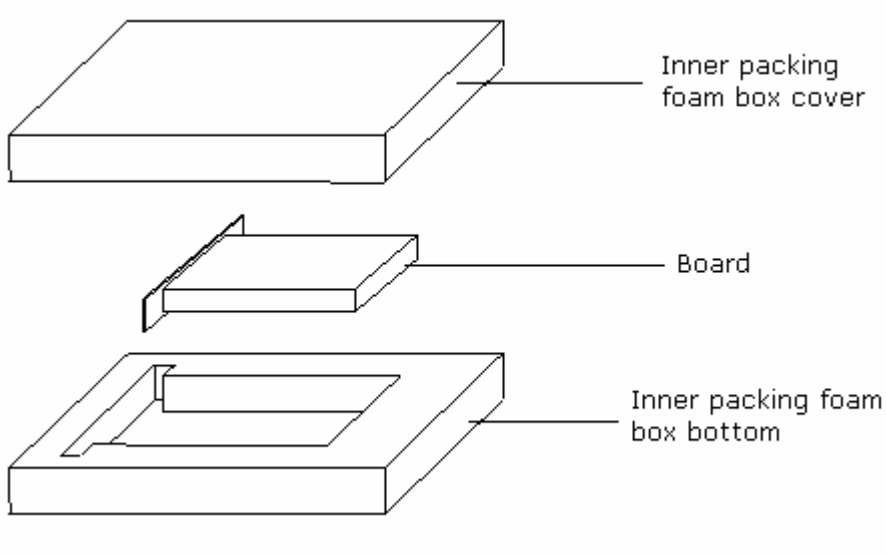

Packing procedure is as follows:

i. Clean the board panels with alcohol.

ii. Place RFE, TRX and HPA boards into their own inner packing foam boxes. Mark cover and bottom of foam box with silkscreen for packing.

iii. After TRX and HPA boards are put into a foam box, put them into a universal paper packing box made for boards. Figure 113 shows this packing box.

FIGURE 113 - GENERAL PAPER PACKING BOX FOR BOARDS

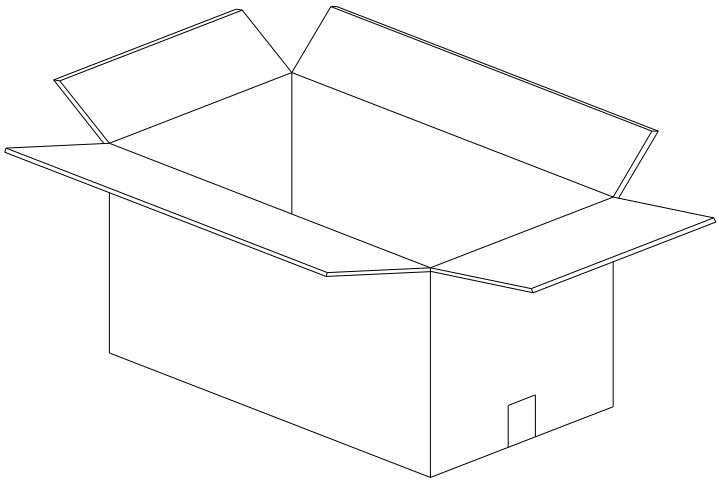

Put RFE board into a foam box and then into a paper packing box. Figure 114 shows this box.

FIGURE 114 - PAPER PACKING BOX FOR RFE BOARDS

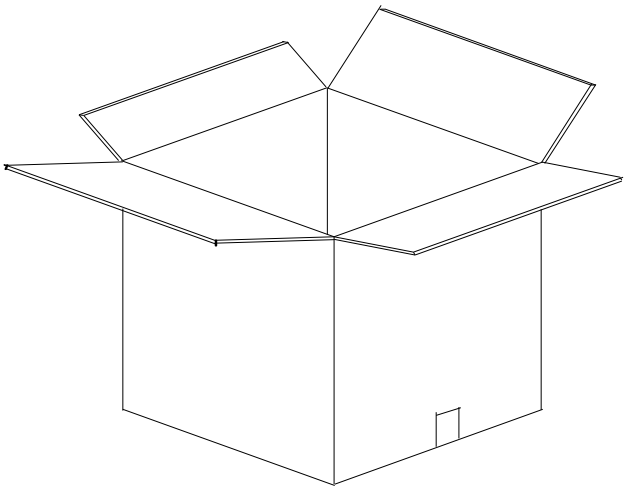

Figure 115 shows procedure for board packing.

FIGURE 115 - PACKING RFE, HPA AND TRX BOARD

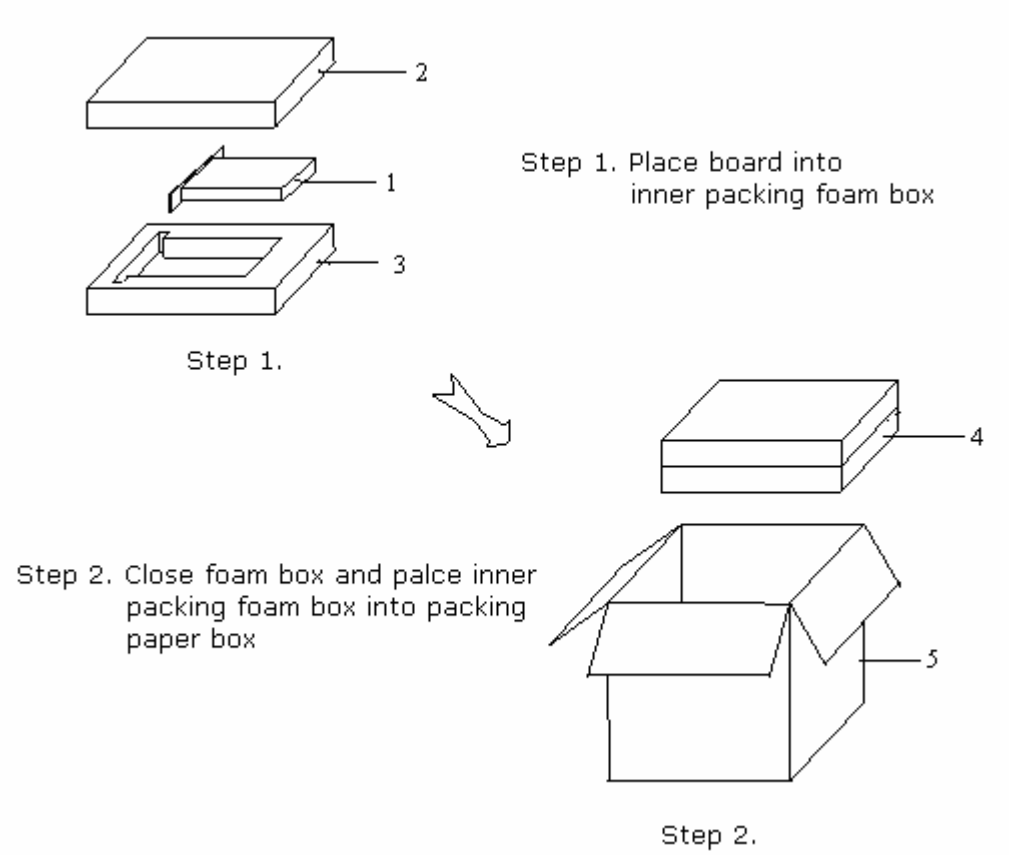

1. Board
2. Inner packing foam box cover
3. Inner packing foam box bottom
4. Closed foam box
5. Paper packing box

iv. Put packing list into a paper packing box and some packets of desiccant.

v. Seal the box top with a tape according to H shape. Figure 116 shows to put straps around the paper box at 3.93 inch (10 cm) away from the end.

FIGURE 116 - SEALING AND PACKING

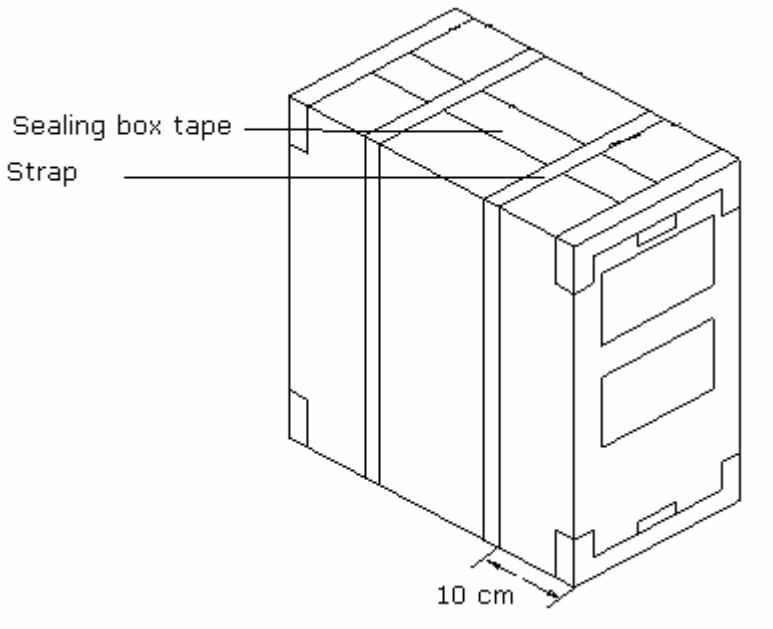

- PPM Packing.

  Follow procedure below to pack PPM:

  i. Clean board panels with alcohol after power boards are dismounted.

  ii. Pack power board into antistatic bag and put 2 bags of desiccant (3 g per bag) into the bag. Press excessive parts of a plastic bag and wrap it with an adhesive tape.

  iii. Put a foam pad to packing carton bottom.

  iv. Put two power supply pads (face to face) into a general packing box for parts. Figure 117 shows to put power board into paper packing box.

  v. Put foam baffles between boards and paper boxes for separation and fixing.

  vi. Cover it with one packing material.

  vii. Put packing list into a paper packing box and 5 packets of desiccant. Seal the box top with a tape according to H shape.

FIGURE 117 - PACKING POWER BOARD

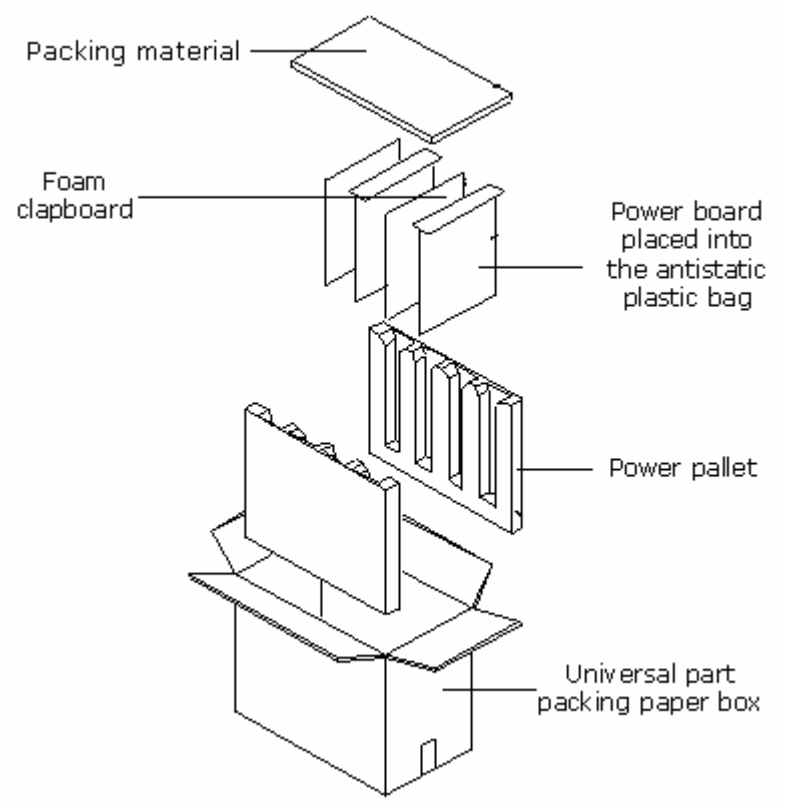

Figure 118 shows to put straps around the paper box at 3.93 inch (10 cm) away from the end.

FIGURE 118 - SEALING POWER BOARD PACKING BOX

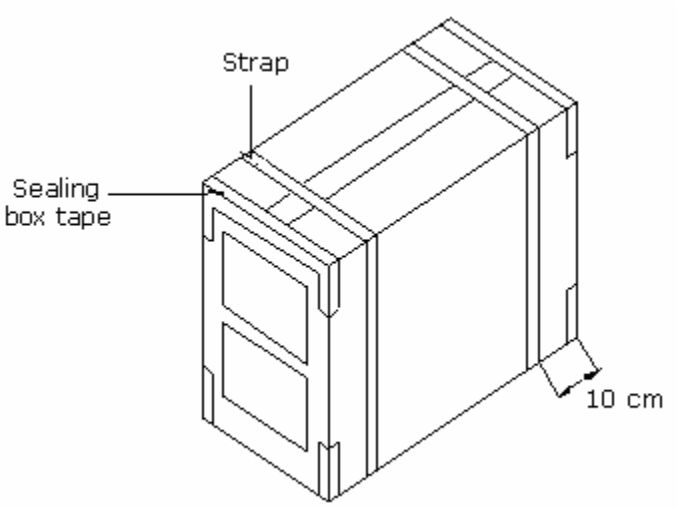

Base Packing

CBTS cabinet base is packed in a paper packing box for base. Pack 8 M10 x 80 expansion bolts and washers in a small plastic bag and put into a paper packing box for bases. After packing, put the paper packing box for bases into a general wooden packing box for parts.

Engineering Materials Packing

Put engineering materials (such as antenna, power and transmission cables, 1/2" jumper, GPS cable, three-way feeder clamp, and grounding clip) into original paper packing boxes.

Put small engineering materials (such as the lightning arrester, adhesive tape and connecting nose) into a general external paper packing box for engineering accessories according to their quantity codes.

Seal above paper packing boxes and put them into a wooden packing box for engineering accessories.

Transportation

Take following measure for equipment transportation:

- Products are in a specified container and according to container transportation marks.
- There are no more than 3 layers for wooden packing box and 4 layers for paper packing box. Sophisticated equipment is placed above and others below. Centre of gravity height is no more than 78.74 inch, and vehicle is not overloaded.
- Vehicle velocity is such to ensure safety based on road conditions.
- Products are away from flammable, explosive or corrosive articles.
- Protect equipment from rain, snow or other liquids, dirt, sunlight, collision and materials with strong magnetism and radiation while transportation.
- Cover equipment with tarpaulin during open-air transportation.
- In long-distance transportation, do not load equipment on an open ship or carriage. In case of transhipment, do not store equipment in an open storehouse.
- Deliver and store precision instrument, meters, computers and monitors according to moisture, shock and pressure-proof labels in the packing box.
- Always keep products upright.
- Pay attention to safety while handling equipment. Ensure that only skilled workers are operating the handling tools.

Storage

Take following measure for equipment storage:

- Products and its components are in original packages.
- Storage sites are clean, dry, and ventilated, with air-conditioning and lighting facilities. Temperature and humidity range is according to the requirement.
- Equipment is not under direct sunlight.
- Storehouse is equipped with moisture-proof, dustproof, shockproof and corrosion-resistance facilities, and the corresponding antistatic facilities for static-sensitive materials.
- All goods are clean and in order with clear labels.
- Keep a record of all equipment. Ensure goods location codes or other necessary marks for the stored materials.
- Check stock conditions regularly. Update inventory record once a month.
- Install antistatic floorboards at warehouse entrance.
- Place material in warehouses based on “First-in-first-out” principle.
- Check equipment conditions by performing tests, if the product is stored for more than six months.

This page is intentionally blank.

Appendix B

SiteMaster Usage

This appendix describes SiteMaster usage:

- Frequency range selection
- SiteMaster check
- Feeder input parameters
- Tester installation
- Measuring SWR
- Measuring DTF

Note:

- SiteMaster usage depends on model type used. Refer to device usage documents attached for usage.

Frequency Range Selection

Take following steps to select a frequency range using SiteMaster:

1. Press <ON> to turn on SiteMaster meter.
2. Press <FREQ> on the main menu.
3. Press <F1> on the [Frequency] menu.
4. Input [Lower] frequency, such as 825 MHz, and press <Enter> for confirmation.
5. Press <F1> on the [Frequency] menu.
6. Input [Higher] frequency, such as 880 MHz, and press <Enter>for confirmation.
7. After confirmation, press [Main] to return to the main menu.

SiteMaster Check

Check the SiteMaster for frequency, environment and feeder parameters changes. Take following steps to check:

1. Before check, ensure that input frequency range in SiteMaster is correct.
2. Press <STARTCAL> to start check.
3. Press <Measuring OPEN>, <Measuring SHORT> and <Measuring Load> as indicated to complete the check.
4. Include the extension cable attached with the meter to ensure measurement accuracy.

Feeder Input Parameters

Take following steps to input feeder parameters:

1. Press <DIST>
2. Press <MORE>
3. Press <LOSS> to enter input feeder loss (dB) per meter. Press <Enter> for confirmation.
4. Press <PROP V> to enter relative transmission rate. Press <Enter> for confirmation.
5. Press <Main> to return to the main menu.

Tester Installation

Connect extension cables one end to RFE jumper connector inside the cabinet and other end to Refl meter interface.

If active devices such as tower top amplifier or trunk amplifier are used for feeder measurement, use jumpers to dodge it.

Measuring SWR

Take following steps to measure SWR:

1. Press <OPT>
2. Press <B1> and select [MODE]
3. Press <Up> or <Down> to choose <SWR> and press <Enter> for confirmation.
4. Press <MAIN>to return to the main menu.
5. Input a proper frequency range if required.
6. Check meter if required.
7. Press <MAIN>to return to the main menu.
8. Press <RUN> to take measurement.
9. Press <AUTO SCALE> to adjust screen Y-coordinates.
10. View the frequency SWR values within this frequency band, Figure 119 shows this process.
11. Press <Save Display> to store data.

FIGURE 119 - ANTENNA FEEDER SWR TEST

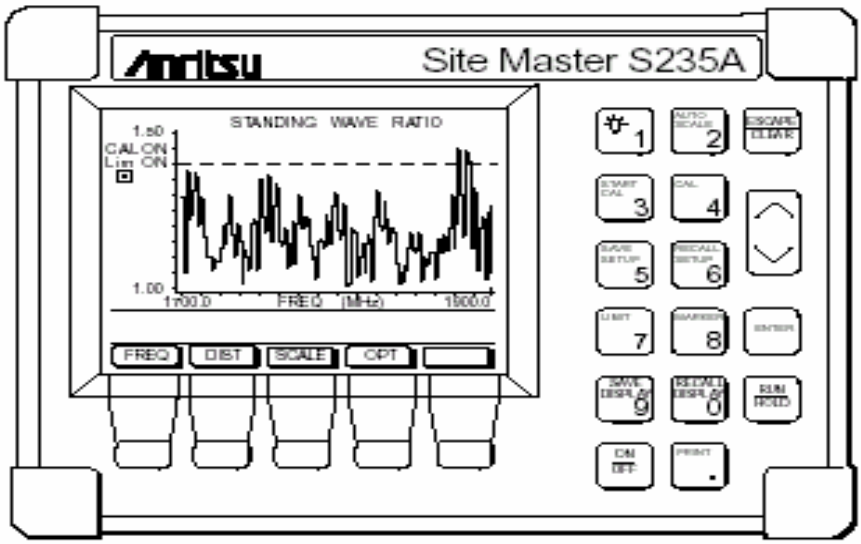

Measuring DTF

Take following steps to measure DTF:

1. Press <OPT>
2. Press <B1>and select {MODE}
3. Press <Up> or <Down> to choose [SWR] and press <Enter> for confirmation.
4. Press <MAIN> to return to the main menu.
5. Input a proper frequency range if required.
6. Check meter if required.
7. Input a proper feeder length if required.
8. Press <MAIN> to return to the main menu.
9. Press <RUN> to take measurement.
10. Press <AUTO SCALE> to adjust screen Y-coordinates.
11. Press <Mark>to view SWR value of each frequency point within this frequency band. Check the fault points. Figure 120 shows DTF measurement.
12. Press <Save Display>to save data.

FIGURE 120 - MEASUREMENT OF ANTENNA FEEDER DTF

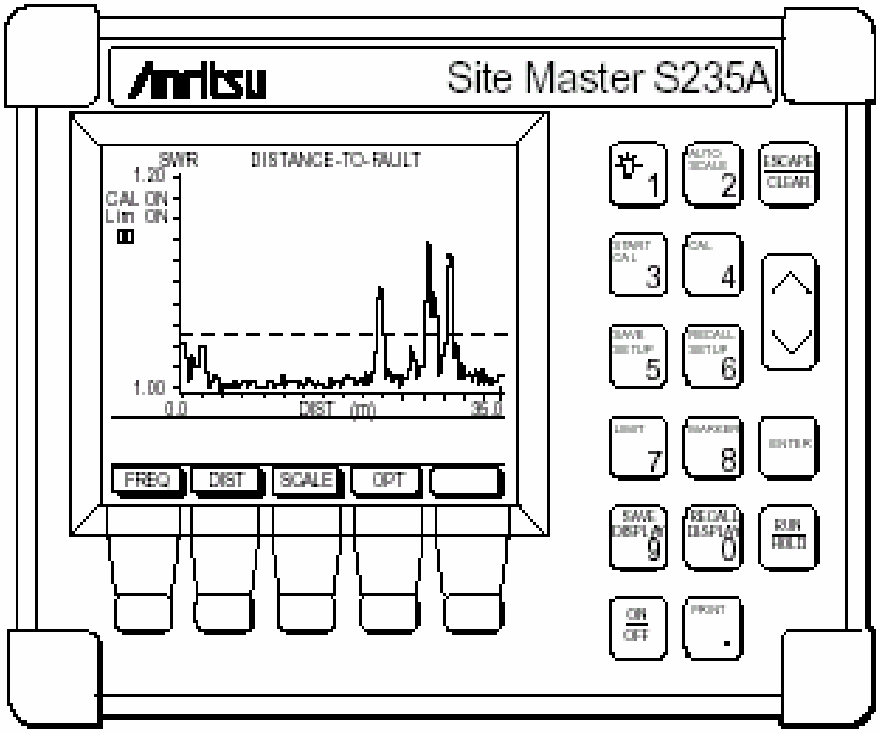

Appendix C

Cabinet Working Modes

This appendix describes cabinet working modes.

Table 19 illustrates six cabinet working modes.

TABLE 19 - CBTS WORKING MODES

Working mode	Description	System features
LS	Local single mode	Supports 4C3S (1X/DO) and most cost effective
RS	Remote single mode	Supports 4C3S (1X/DO)
LEA	Local extended mode A	This mode use two rack configuration with single BDS rack. It supports 24 CS for (1X) and 8C3S and 4C6S configuration
LEB	Local extended mode B	This mode uses two BDS rack configuration. It supports 24 CS for (1X/EV-DO), 8C3S and 4C6S configuration. Use fiber to connect two BDS racks
RE	Remote extended mode	Use optical fiber to enable remote extension RRFS. Supports 12 CS for (DO) or 24 CS for (1X)
ME	Mix extended mode	This mode uses two RFS racks i.e. local and remote. This mode supports 24 CS for EV-DO and 48 CS for 1X. Uses optical fiber to enable remote extension, remote side can be CBTS and MBTS-RFS.

Installation in LS mode is described before. Following section introduces cabling for remaining five modes.

- RS installation

  In RS mode, baseband module is not needed in remote CBTS. Insert optical fibre from baseband side into RMM board on remote CBTS.

- RE installation

  In RE mode, CBTS is primary base station. Upon completion of other equipments, it is only needed to lead an optical fibre out from RIM board. Then lead optical fibre to remote RF module via transmission device.

- LEA installation

LEA refers to extension of CBTS RF module. Use optical fibre to connect RIM on primary CBTS and RMM on extended CBTS. Connect EXT_MON ports on both primary and extensive CBTS.

Figure 121 shows micro coaxial cable connectors on CBTS back plane.

FIGURE 121 - MICRO COAXIAL CONNECTORS

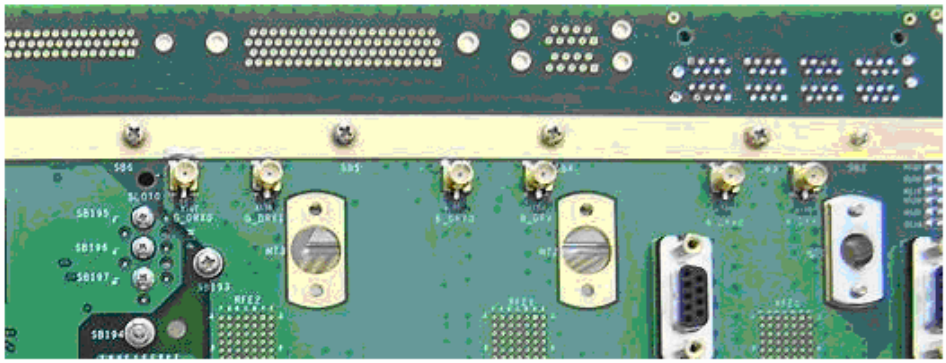

In LEA mode, 6 micro coaxial connectors on primary CBTS must be connected with interfaces on extensive CBTS in 1 to 1 relationship.

- LEB installation

  LEB refers CBTS cabinet combination of extended RF modules and baseband modules. EXT_BDS and EXT_MON interfaces on both cabinet must be connected. Connect M_FE0,M_FE1, S_FE0 and S_FE1 interfaces on primary cabinet with same interfaces on secondary cabinet.

- ME installation

  ME mode is integration of LEB and RE. First implement local cabinet combination to extend baseband/RF and then implement remote extension with remote RF. It only needs to lead optical fibre out after LEB installation is complete.

Appendix D

Monitoring Cables Definition

This section describes signal definition of four external monitoring cables used in CBTS.

- RS232 Connector

  Figure 122 shows RS232 connector.

FIGURE 122 - RS232 CONNECTOR

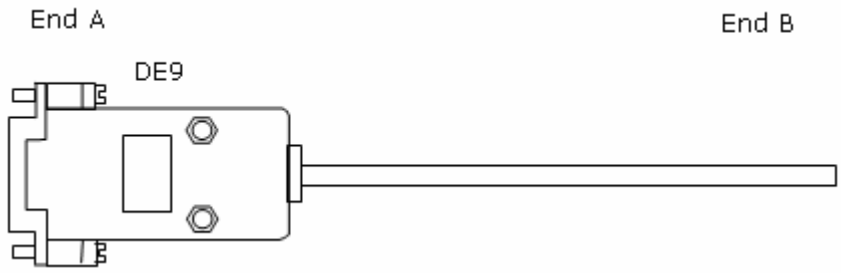

Table 20 illustrates RS232 signal definition.

TABLE 20 - RS232 SIGNAL DEFINITION

End A No.	Colour	Signal Definition	Remark
2	White	RS232 transmit	First twisted-pair
3	Blue	RS232 receive	
5	White	Ground	Second twisted-pair

- RS485 connector

Figure 123 shows RS485 connector.

FIGURE 123 - RS485 CONNECTOR

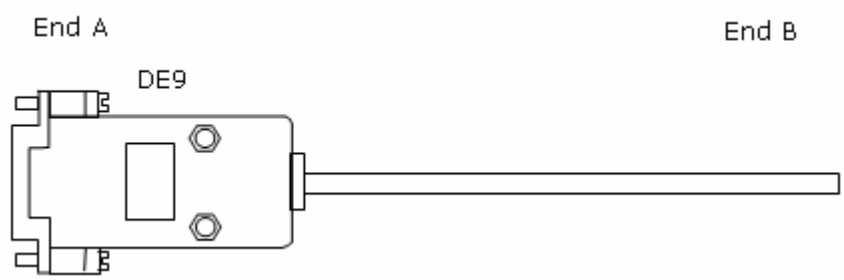

Table 21 illustrates RS485 signal definition.

TABLE 21 - RS485 SIGNAL DEFINITION

End A No.	Colour	Signal Definition	Remark
6	White	O _RS485-RX – _EM	First twisted-pair
7	Blue	O _RS485-RX+_EM	
8	White	I _RS485-TX – _EM	Second twisted-pair
9	Orange	I _RS485-TX + _EM	

Note:

- Connect wires according to above definition. Insert two four-core cables into a DE9 connector while using both RS232 and RS485 connectors.

- On/off input cable（B1 interface）

There are 10 pairs of on/off input signals. These are DB25 cable connector. Figure 124 shows on/off input cable.

FIGURE 124 - ON/OFF INPUT CABLE

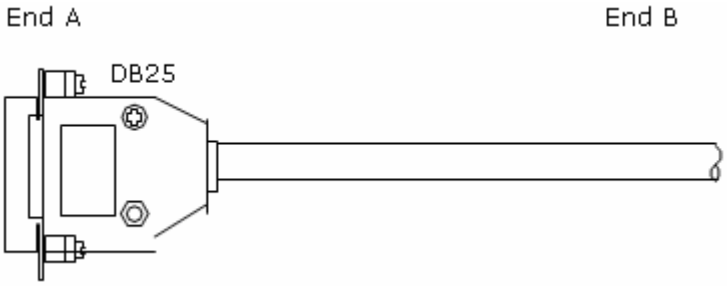

Table 22 illustrates On/off input signal definition.

TABLE 22 - ON/OFF INPUT SIGNAL DEFINITION

End A No.	Colour	Signal Definition	Remark
1	White	I _ SW-ONA[0]	First twisted-pair
2	Blue	I _ SW-ONB[0]	
3	White	I _ SW-ONA[2]	Second twisted-pair
4	Orange	I _ SW-ONB[2]	
5	White	I _ SW-ONA[4]	Third twisted-pair
6	Green	I _ SW-ONB[4]	
7	White	I _ SW-ONA[6]	Fourth twisted-pair
8	Brown	I _ SW-ONB[6]	
9	Red	I _ SW-ONA[8]	Fifth twisted-pair
10	Blue	I _ SW-ONB[8]	
14	Red	I _ SW-ONA[1]	Sixth twisted-pair
15	Brown	I _ SW-ONB[1]	
16	Red	I _ SW-ONA[3]	Seventh twisted-pair
17	Green	I _ SW-ONB[3]	
18	Red	I _ SW-ONA[5]	Eighth twisted-pair
19	Brown	I _ SW-ONB[5]	
20	Black	I _ SW-ONA[7]	Ninth twisted-pair
21	Blue	I _ SW-ONB[7]	
22	Black	I _ SW-ONA[9]	Tenth twisted-pair
23	Orange	I _ SW-ONB[9]	

- Control output cables（B2 interface）

Figure 125 shows control output cable.

FIGURE 125 - CONTROL OUTPUT CABLE

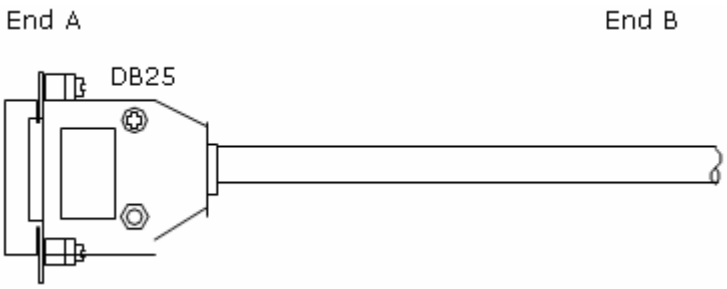

Table 23 illustrates control output signal definition.

TABLE 23 - CONTROL OUTPUT SIGNAL DEFINITION

A End No.	Colour	Signal Definition	Remark
1	White	O_CONTROL[1]	First twisted-pair
2	Blue	GNDD	
3	White	O_CONTROL[3]	Second twisted-pair
4	Orange	GNDD	
5	White	O_CONTROL[0]	Third twisted-pair
6	Green	GNDD	
7	White	O_CONTROL[2]	Fourth twisted-pair
8	Brown	GNDD	
9	Red	O_CONTROL[4]	Fifth twisted-pair
10	Blue	GNDD	

Acronyms

Abbreviation	Full Name
1x EV	1x Evolution
1x EV - DO	1x Evolution Data Only
1x EV - DV	1x Evolution Data & Voice
2C3S	Two carriers and three sectors
4C3S	Four carriers and three sectors
A	A Interface - Interface between BSC and MSC
AAA	Authentication, Authorization and Accounting
Abis	Abis Interface - Interface between BSC and BTS
ATM	Asynchronous Transfer Mode
BDS	Baseband Digital System
BIM	BDS Interface Module
BSC	Base Station Controller
BSS	Base Station System
BTS	Base Transceiver Station
CBTS	Compact Base Transceiver Station
CCM	Communication Control Module
CDM	Clock Distribution Module
CHM	Channel Processing Module
DBS	Database Subsystem
DSM	Data Service Module
EPLD	Electrically Programmable Logic Device
FA	Foreign Agent
FER	Frame Error Rate
FPGA	Field Programmable Gate Arrays
GCM	GPS Control Module
GCKM	GPS Clock Module
HA	Home Agent
HDLC	High Level Data Link Control
HDR	High Data Rate
HLR	Home Location Register

Abbreviation	Full Name
HPA	High Power Amplifier
IP	Internet Protocol
LNA	Low Noise Amplifier
MAC	Media Access Control
MBTS	Master BTS
MSC	Mobile Switching Center
MTBCF	Mean Time Between Critical Failure
MTBF	Mean Time Between Failure
MTTR	Mean Time To Recovery
O&M	Operations and Maintenance
OMC	Operation and Maintenance Center
OSS	Operating System Subsystem
OTD	Orthogonal Transmit Diversity
OW	Order Wire
PA	Power Amplifier
PCF	Packet Control Function
PDSN	Packet Data Serving Node
PP2S	Pulse Per 2 seconds
PPP	Point to Point Protocol
RF	Radio Frequency
RFS	Radio Frequency Subsystem
RIM	Radio Interface Module
RRFS	Remote RFS
RSSI	Received Signal Strength Indicator
RX	Receiver
SAM	Site Alarm Module
SBTS	Slave BTS
SCH	Synchronization Channel
SCS	System Control Subsystem
SDH	Synchronous Digital Hierarchy
SNM	SDH Net Module
STS	Space Time Spreading
TOD	Time of Date
TX	Transmit

Figures

Figure 1 - Hardware Installation Flow....16
Figure 2 - Carton Box....26
Figure 3 - Cabinet Outer View....30
Figure 4 - Installation Location Specification....31
Figure 5 - Direct Installation Mode Flow Chart....33
Figure 6 - Holes Position in Direct Installation Mode (Units mm)....34
Figure 7 - Expansion bolts Installation....34
Figure 8 - Cabinet Base Fixing....35
Figure 9 - Cabinet Base Installation....35
Figure 10 - Uninstalling Screws and Washers....36
Figure 11 - Placing Cabinet on Base....36
Figure 12 - Adjusting Cabinet on Base....37
Figure 13 - Fixing Cabinet and Base....37
Figure 14 - Direct Installation Mode Final View....38
Figure 15 - Adjustable Base Installation Mode....39
Figure 16 - Adjustable Base....40
Figure 17 - Adjustable Base Installation Mode Flow Chart....41
Figure 18 - Holes Position in Adjustable Base Installation Mode (Units mm)....42
Figure 19 - Expansion Bolts Installation....42
Figure 20 - Lower Adjustable Base and Cemented Floor....43
Figure 21 - Washers Specifications....43
Figure 22 - Base Upper Part Installation....44
Figure 23 - Adjustable Base and Floor Installation Final View....44
Figure 24 - Fixing Cabinet Base....45
Figure 25 - Adjustable Base installation Final View....46
Figure 26 - Adjustable Base Installation Mode Final View....47
Figure 27 - Cabling Runway....48
Figure 28 - CBTS Cabinet Interfaces....49
Figure 29 - Power Interfaces....50
Figure 30 - Feeder Cable Interface....50
Figure 31 - CBTS E1 Interfaces....51
Figure 32 - CBTS FE Interfaces....51
Figure 33 - CBTS Room Monitoring Interface....52
Figure 34 - CBTS Ordwer Wire Phone Interface....52
Figure 35 - Power Monitoring Interfaces....53
Figure 36 - CBTS External BDS Interface....53
Figure 37 - CBTS External Monitoring Interface....54
Figure 38 - Crimping Pliers....56
Figure 39 - CBTS Power and Grounding Cable Connection....57
Figure 40 - Power Supply and Grounding Cables....58
Figure 41 - Power Supply Cable Connections....59
Figure 42 - 100ΩT1 Cable Structure....60
Figure 43 - 75Ω E1 Cable Structure....61
Figure 44 - 120ΩE1 Cable Structure....63
Figure 45 - CC4Y-J32 Coaxial Cable Connector Assembly....64
Figure 46 - Coaxial Cable on DDF Side....65
Figure 47 - Coaxial Connector Assembly on DDF Side....65
Figure 48 - Impedance Converter....66
Figure 49 - Impedance Converter Wiring Relationship....67

Figure 50 - Cable Straps Requirements 68
Figure 51 - Cable Straps 68
Figure 52 - Feeder Cable Installation 69
Figure 53 - Smog Sensor 72
Figure 54 - Smog Sensor Cable 72
Figure 55 - Terminal Connections at Smoke Sensor Base 73
Figure 56 - Temperature and Humidity Sensor Installation (Unit: mm) 74
Figure 57 - Temperature and Humidity Sensor Cable 74
Figure 58 - Infrared Sensor Cable Structure 75
Figure 59 - Infrared Sensor Dimensions 76
Figure 60 - CBTS External Monitoring Conversion Cable 77
Figure 61 - 3-Sector Antenna Feeder System 81
Figure 62 - Antenna Installation Flow Chart 83
Figure 63 - Hoisting Antenna 84
Figure 64 - Kathrein Antenna Installation 85
Figure 65 - Adjusting Antenna Tilt 86
Figure 66 - CBTS Main Feeder 88
Figure 67 - 4-Hole Feeder Window (Unit: mm) 89
Figure 68 - Cutting Tool for Making 7/8" Feeder Connector 90
Figure 69 - Cutting Feeder with a Cutter 90
Figure 70 - Checking Cut Section Length 91
Figure 71 - Feeder Expanding External Conductor 91
Figure 72 - Connecting Front and Back Parts 92
Figure 73 - Fixing Feeder Connector Front and Back Parts 92
Figure 74 - Wrapping Waterproof Adhesive Tapes (1) 94
Figure 75 - Wrapping Waterproof Adhesive Tapes (2) 94
Figure 76 - Wrapping 9 Waterproof Adhesive Tapes (3) 95
Figure 77 - Grounding Clip 95
Figure 78 - Wrapping Grounding Cable 96
Figure 79 - Three-Feeder Clip 97
Figure 80 - Hoisting Feeder Up to Tower 98
Figure 81 - BTS Grounding System Cable Connection 99
Figure 82 - Outer View of Grounding Copper busbar (Units mm) 100
Figure 83 - Lightning Arrester Frame Installation 101
Figure 84 - Running Feeders into Equipment Room (Method 1) 102
Figure 85 - Running Feeders into Equipment Room (Method 2) 102
Figure 86 - GPS Antenna Feeder System 106
Figure 87 - Tower Mounted GPS Antenna 107
Figure 88 - Roof Mounted GPS Antenna 108
Figure 89 - NJ-9 GPS Connector 109
Figure 90 - NJ-9 GPS Connector Parts 110
Figure 91 - Stripping GPS Cable 110
Figure 92 - External Conductor Assembly 111
Figure 93 - Shielded Layer 111
Figure 94 - Inserting External Conductor Flange 111
Figure 95 - Stripping Insulation Layer 112
Figure 96 - After Stripping Insulation Layer 112
Figure 97 - Inserting Insulating Plate 113
Figure 98 - Welding Inner Conductor Pin 113
Figure 99 - Cutting Shielded Layer 114
Figure 100 - Assembling Shell and Cable 114
Figure 101 - Shell Tightening 115
Figure 102 - Board Installation Flow Chart 118
Figure 103 - CBTS Board Slot 119
Figure 104 - RFS Board Back-End 120
Figure 105 - Board Plugging (Step 1) 121
Figure 106 - Board Plugging (Step 1) 121
Figure 107 - Board Plugging (Step 3) 122
Figure 108 - Wooden Packing Box for Cabinet 136
Figure 109 - Wooden Packing Box for Parts 137
Figure 110 - Cabinet Packing 138

Figure 111 - Sealing a Box 138
Figure 112 - Inner Packing Foam Box 139
Figure 113 - General Paper Packing Box for Boards..... 140
Figure 114 - Paper Packing Box for RFE Boards 140
Figure 115 - Packing RFE, HPA and TRX Board 141
Figure 116 - Sealing and Packing..... 142
Figure 117 - Packing Power Board 143
Figure 118 - Sealing Power Board Packing Box..... 143
Figure 119 - Antenna Feeder SWR Test 149
Figure 120 - Measurement of Antenna Feeder DTF..... 150
Figure 121 - Micro Coaxial Connectors 152
Figure 122 - RS232 Connector 153
Figure 123 - RS485 Connector 154
Figure 124 - On/Off Input Cable 155
Figure 125 - Control Output Cable 156

Tables

Table 1 - Typographical Conventions.....xi
Table 2 - Mouse Operation Conventions xii
Table 3 - Safety Signs.....xiii
Table 4 - Installation Location Specifications.....17
Table 5 - Temperature and Humidity Range.....17
Table 6 - Power Supply Indices 18
Table 7 - Radiation Protection Requirements.....18
Table 8 - Tool and Meter List 19
Table 9 - Adjustable Base Selection 40
Table 10 - Power and Grounding Cable Connection 57
Table 11 - 100 Ω Internal Cable Connections 60
Table 12 - 75 Ω E1 Cable Internal Connections 62
Table 13 - 120Ω E1 Cable Internal Connections.....63
Table 14 - Impedance Converter Wiring relationship 67
Table 15 - Terminal Connections 73
Table 16 - Temperature and Humidity Sensor Wiring relationship 75
Table 17 - External Monitoring Conversion Cable Labels 77
Table 18 - Feeder Models and Dimensions 89
Table 19 - CBTS Working Modes.....151
Table 20 - RS232 Signal Definition 153
Table 21 - RS485 Signal Definition 154
Table 22 - On/Off Input Signal Definition.....155
Table 23 - Control Output Signal Definition.....156

This page is intentionally blank

Index

4C3S 30, 157
AAA.....157
AC 18, 125, 132, 133
ANT1 93
ATM.....157
B 39, 60, 61, 62, 63, 72, 73, 74, 75, 147, 151, 153
BDS..... 29, 52, 53, 117, 121, 157
BIM.....157
BS 18, 20
BSC.....19, 21, 50, 60, 62, 63, 157
BSS..... 80, 157
BTS..... 53, 99, 100, 157, 158
CBTS 1, 3, 15, 16, 17, 18, 19, 21, 24, 25, 29, 30, 31, 32, 37, 48, 49, 50, 51, 52, 53, 56, 57, 60, 61, 62, 63, 64, 76, 77, 78, 79, 80, 81, 88, 99, 117, 119, 123, 124, 125, 133, 139, 144, 157
CC4Y-J32 64
CCM.....157
CDMA2000 .....1, 2
CHM.....157
COM.....52
DB 50
DB25 .....72, 137
DB44 .....51, 53
DB9..... 52, 74, 76, 137
DBS.....157
DC 18, 100, 132, 133
DIN-F 101
DIN-M 101
DOOR 77
DOOR_MON 77
DSM.....157
DUP..... 126
DV 157
E 1, 3, 27, 125, 148, 149, 150
E1 19, 29, 50, 55, 60, 61, 62, 63, 64, 66, 68, 137
E1/T1 68
EPLD 157
EV 157
EXT_MON 53
FA 157
FE 29, 50, 51
FER.....157
FPGA.....157
FREQ 148
GCM.....157
GND..... 49, 57, 75
GPS.29, 53, 101, 105, 106, 107, 108, 109, 110, 115, 123, 127, 128, 129, 144, 157
HA 157
HDLC 157
HDR.....157
HLR.....157
INFORMATION 2
INFRARED 77
IP 50, 158
LEGAL 2
LNA.....158
LOSS 148
MAC.....158
MAIN 149, 150
MASTER.....20
MODE 149, 150
MS 20
MSC..... 157, 158
MTBCF 158
MTBF 158
MTTR 158
N/A..... 3
O&M.....158
OFF..... 132
OMC.....158
OPEN 148
OSS.....158
OTD.....158
OUT.....77
OW 158
P 1, 3, 158
PA 133, 139, 158
PCF.....158
PDSN 158
PGND 49, 100, 125
PMM..... 133
PP2S 158
PPM..... 139, 142
PPP.....158
PRM..... 133
PWS..... 132, 133
PWSB 52
R&D.....3

R1 2
RF 123, 126, 127, 129, 158
RFE.....119, 136, 139, 140, 141, 149
RFE-DIV 139
RFE-DUP 139
RFS..... 117, 120, 158
RIM.....158
RJ11 51
ROOM 51, 78
ROSENBERGER 90
RSSI 158
RX 67, 158
RX0.....60, 63
RX1.....60, 63
SAM.....158
SCALE 149, 150
SCH.....158
SCS.....158
SDH.....158
SHORT 148
SITE 20
SMOG 77
SNM.....158
STS.....158
SWR 103, 123, 127, 130, 147, 149, 150
TEST 50
TOD.....158
TRX.....119, 126, 136, 139, 141
TX 67, 158
URL..... 1
V 18, 49, 56, 57, 125, 132, 133, 148
VGND 100
VSWR 19, 130
ZXC10 .... 1, 3, xi, 16, 18, 21, 31, 61