Appendix B. Plots of SAR Measurement

The plots are shown as follows.

#28 CDMA2000 BC0_RC3 SO55_Right Cheek_Ch1013

DUT: 142502

Communication System: CDMA2000; Frequency: 824.7 MHz;Duty Cycle: 1:1
Medium: HSL_835_110510 Medium parameters used: f = 825 MHz; σ = 0.902 mho/m; ε_r = 42.1; ρ = 1000 kg/m^3
Ambient Temperature：23.5 ℃; Liquid Temperature：21.6 ℃

DASY5 Configuration:
- Probe: ET3DV6 - SN1788; ConvF(6.23, 6.23, 6.23); Calibrated: 2010-9-21
- Sensor-Surface: 4mm (Mechanical Surface Detection)
- Electronics: DAE4 Sn1210; Calibrated: 2010-11-18
- Phantom: SAM1; Type: SAM; Serial: TP-1479
- Measurement SW: DASY5, V5.2 Build 157; SEMCAD X Version 14.0 Build 57

Ch1013/Area Scan (61x91x1): Measurement grid: dx=15mm, dy=15mm
Maximum value of SAR (interpolated) = 0.789 mW/g

Ch1013/Zoom Scan (5x5x7)/Cube 0: Measurement grid: dx=8mm, dy=8mm, dz=5mm
Reference Value = 14.2 V/m; Power Drift = -0.094 dB
Peak SAR (extrapolated) = 0.979 W/kg
SAR(1 g) = 0.720 mW/g; SAR(10 g) = 0.517 mW/g
Maximum value of SAR (measured) = 0.741 mW/g

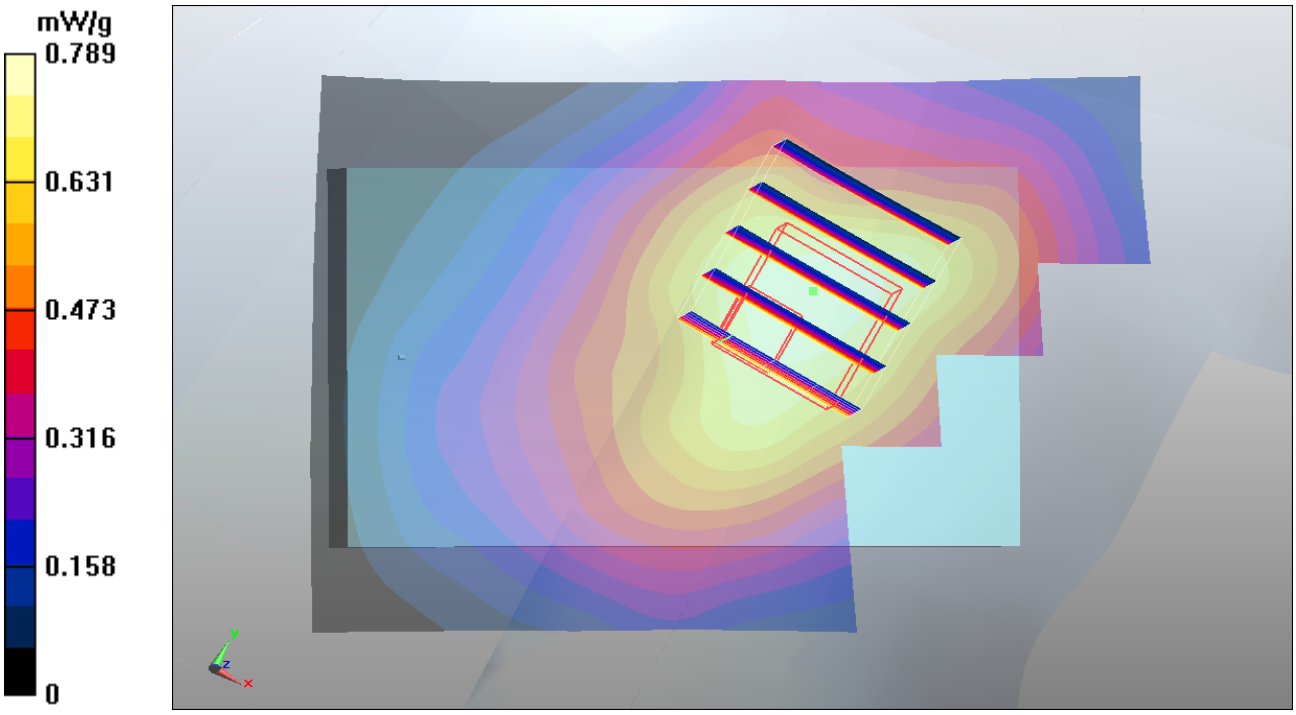
mW/g
0.789
0.631
0.473
0.316
0.158
0

#29 CDMA2000 BC0_RC3 SO55_Right Tilted_Ch1013

DUT: 142502

Communication System: CDMA2000; Frequency: 824.7 MHz;Duty Cycle: 1:1
Medium: HSL_835_110510 Medium parameters used: f = 825 MHz; σ = 0.902 mho/m; ε_r = 42.1; ρ = 1000 kg/m^3
Ambient Temperature：23.5 ℃; Liquid Temperature：21.6 ℃

DASY5 Configuration:
- Probe: ET3DV6 - SN1788; ConvF(6.23, 6.23, 6.23); Calibrated: 2010-9-21
- Sensor-Surface: 4mm (Mechanical Surface Detection)
- Electronics: DAE4 Sn1210; Calibrated: 2010-11-18
- Phantom: SAM1; Type: SAM; Serial: TP-1479
- Measurement SW: DASY5, V5.2 Build 157; SEMCAD X Version 14.0 Build 57

Ch1013/Area Scan (51x91x1): Measurement grid: dx=15mm, dy=15mm
Maximum value of SAR (interpolated) = 0.484 mW/g

Ch1013/Zoom Scan (5x5x7)/Cube 0: Measurement grid: dx=8mm, dy=8mm, dz=5mm
Reference Value = 19.6 V/m; Power Drift = -0.105 dB
Peak SAR (extrapolated) = 0.548 W/kg
SAR(1 g) = 0.463 mW/g; SAR(10 g) = 0.360 mW/g
Maximum value of SAR (measured) = 0.484 mW/g

Ch1013/Zoom Scan (5x5x7)/Cube 1: Measurement grid: dx=8mm, dy=8mm, dz=5mm
Reference Value = 19.6 V/m; Power Drift = -0.105 dB
Peak SAR (extrapolated) = 0.548 W/kg
SAR(1 g) = 0.401 mW/g; SAR(10 g) = 0.269 mW/g
Maximum value of SAR (measured) = 0.466 mW/g

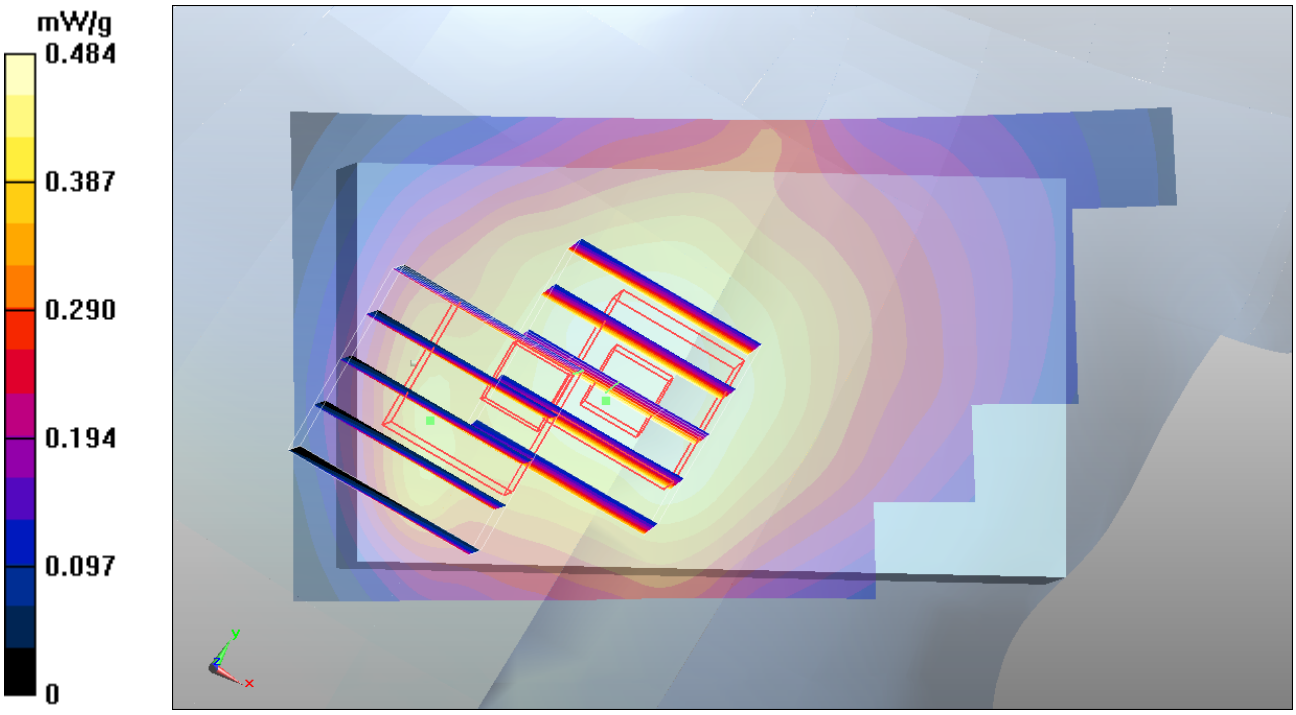
mW/g
0.484
0.387
0.290
0.194
0.097
0

#30 CDMA2000 BC0_RC3 SO55_Left Cheek_Ch1013

DUT: 142502

Communication System: CDMA2000; Frequency: 824.7 MHz;Duty Cycle: 1:1
Medium: HSL_835_110510 Medium parameters used: f = 825 MHz; σ = 0.902 mho/m; ε_r = 42.1; ρ = 1000 kg/m^3
Ambient Temperature：23.5 ℃; Liquid Temperature：21.6 ℃

DASY5 Configuration:
- Probe: ET3DV6 - SN1788; ConvF(6.23, 6.23, 6.23); Calibrated: 2010-9-21
- Sensor-Surface: 4mm (Mechanical Surface Detection)
- Electronics: DAE4 Sn1210; Calibrated: 2010-11-18
- Phantom: SAM1; Type: SAM; Serial: TP-1479
- Measurement SW: DASY5, V5.2 Build 157; SEMCAD X Version 14.0 Build 57

Ch1013/Area Scan (61x91x1): Measurement grid: dx=15mm, dy=15mm
Maximum value of SAR (interpolated) = 0.747 mW/g

Ch1013/Zoom Scan (5x5x7)/Cube 0: Measurement grid: dx=8mm, dy=8mm, dz=5mm
Reference Value = 14.5 V/m; Power Drift = 0.0073 dB
Peak SAR (extrapolated) = 0.904 W/kg
SAR(1 g) = 0.722 mW/g; SAR(10 g) = 0.533 mW/g
Maximum value of SAR (measured) = 0.749 mW/g

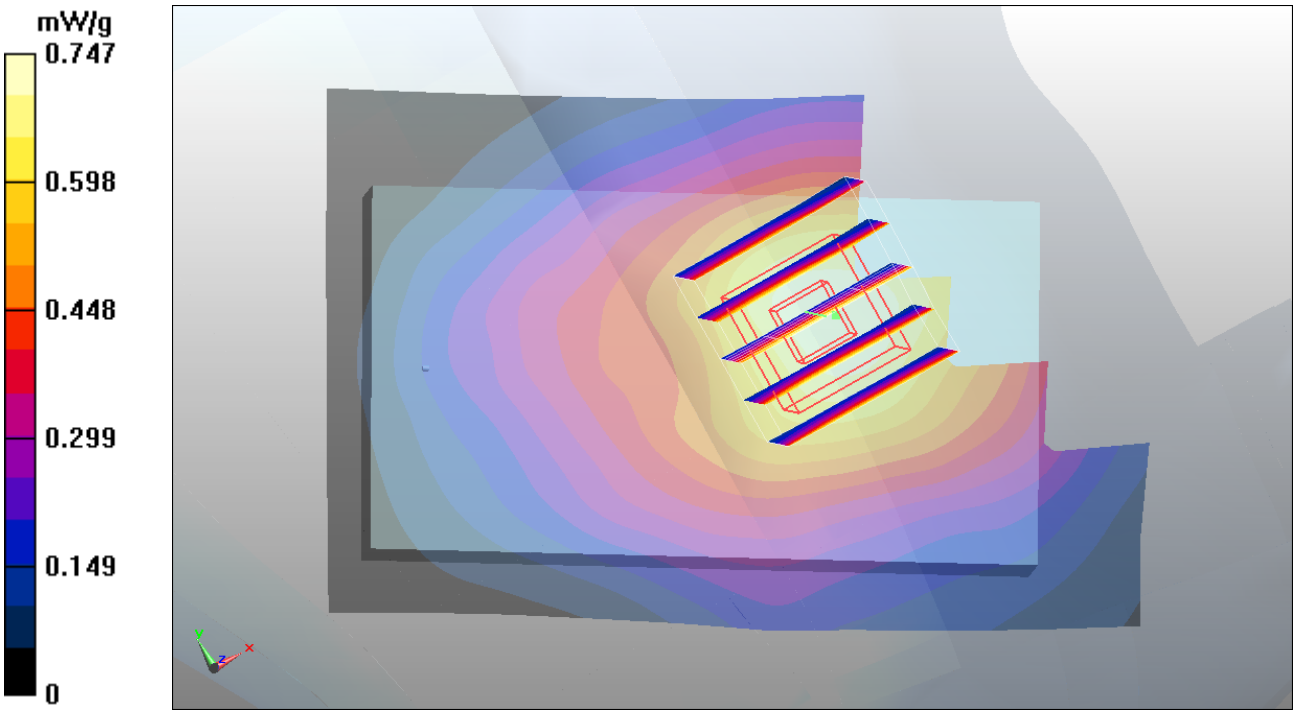
mW/g
0.747
0.598
0.448
0.299
0.149
0

#30 CDMA2000 BC0_RC3 SO55_Left Cheek_Ch1013_2D

DUT: 142502

Communication System: CDMA2000; Frequency: 824.7 MHz;Duty Cycle: 1:1
Medium: HSL_835_110510 Medium parameters used: f = 825 MHz; σ = 0.902 mho/m; ε_r = 42.1; ρ = 1000 kg/m^3
Ambient Temperature：23.5 ℃; Liquid Temperature：21.6 ℃

DASY5 Configuration:
- Probe: ET3DV6 - SN1788; ConvF(6.23, 6.23, 6.23); Calibrated: 2010-9-21
- Sensor-Surface: 4mm (Mechanical Surface Detection)
- Electronics: DAE4 Sn1210; Calibrated: 2010-11-18
- Phantom: SAM1; Type: SAM; Serial: TP-1479
- Measurement SW: DASY5, V5.2 Build 157; SEMCAD X Version 14.0 Build 57

Ch1013/Area Scan (61x91x1): Measurement grid: dx=15mm, dy=15mm
Maximum value of SAR (interpolated) = 0.747 mW/g

Ch1013/Zoom Scan (5x5x7)/Cube 0: Measurement grid: dx=8mm, dy=8mm, dz=5mm
Reference Value = 14.5 V/m; Power Drift = 0.0073 dB
Peak SAR (extrapolated) = 0.904 W/kg
SAR(1 g) = 0.722 mW/g; SAR(10 g) = 0.533 mW/g
Maximum value of SAR (measured) = 0.749 mW/g

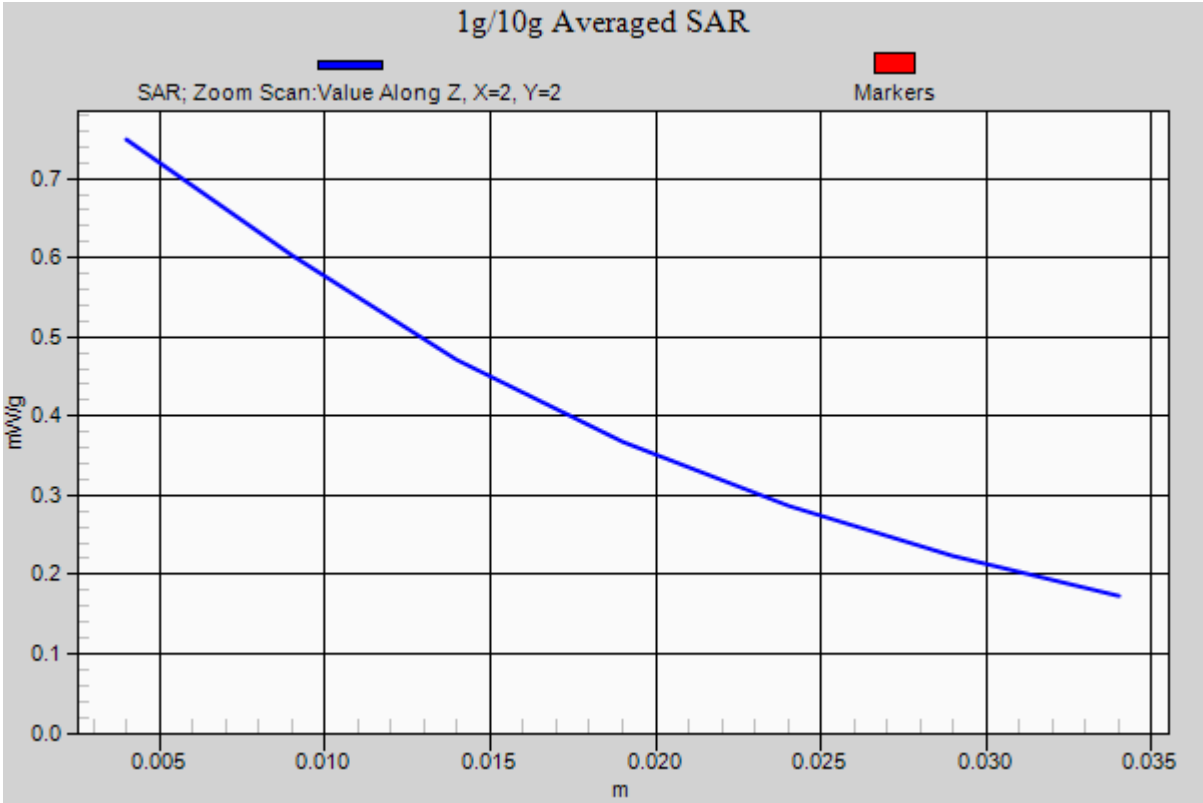
1g/10g Averaged SAR
SAR; Zoom Scan:Value Along Z, X=2, Y=2
Markers
mW/g
0.0
0.1
0.2
0.3
0.4
0.5
0.6
0.7
0.005
0.010
0.015
0.020
0.025
0.030
0.035
m

#31 CDMA2000 BC0_RC3 SO55_Left Tilted_Ch1013

DUT: 142502

Communication System: CDMA2000; Frequency: 824.7 MHz;Duty Cycle: 1:1
Medium: HSL_835_110510 Medium parameters used: f = 825 MHz; σ = 0.902 mho/m; ε_r = 42.1; ρ = 1000 kg/m^3
Ambient Temperature：23.5 ℃; Liquid Temperature：21.6 ℃

DASY5 Configuration:
- Probe: ET3DV6 - SN1788; ConvF(6.23, 6.23, 6.23); Calibrated: 2010-9-21
- Sensor-Surface: 4mm (Mechanical Surface Detection)
- Electronics: DAE4 Sn1210; Calibrated: 2010-11-18
- Phantom: SAM1; Type: SAM; Serial: TP-1479
- Measurement SW: DASY5, V5.2 Build 157; SEMCAD X Version 14.0 Build 57

Ch1013/Area Scan (51x91x1): Measurement grid: dx=15mm, dy=15mm
Maximum value of SAR (interpolated) = 0.488 mW/g

Ch1013/Zoom Scan (5x5x7)/Cube 0: Measurement grid: dx=8mm, dy=8mm, dz=5mm
Reference Value = 20.3 V/m; Power Drift = -0.079 dB
Peak SAR (extrapolated) = 0.553 W/kg
SAR(1 g) = 0.461 mW/g; SAR(10 g) = 0.355 mW/g
Maximum value of SAR (measured) = 0.486 mW/g

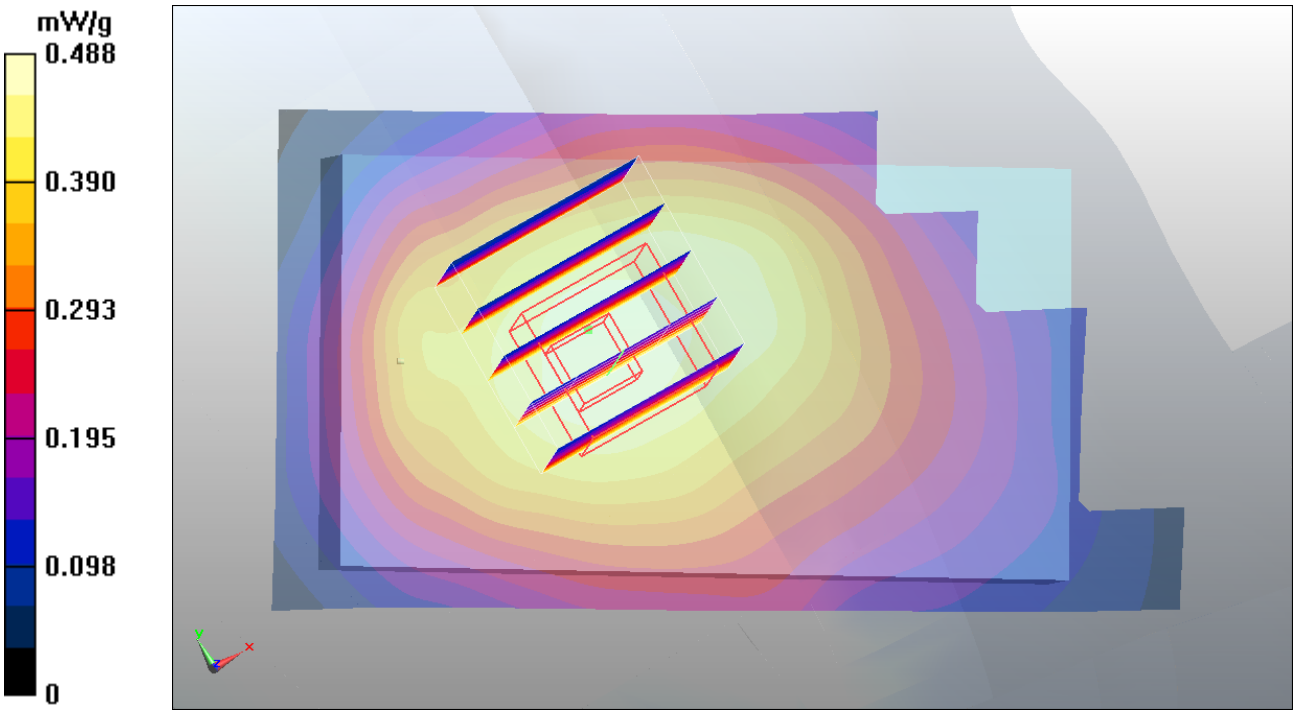
mW/g
0.488
0.390
0.293
0.195
0.098
0
Y
X

#20 CDMA2000 BC15_RC3 SO55_Right Cheek_Ch425

DUT: 142502

Communication System: CDMA2000; Frequency: 1731.25 MHz;Duty Cycle: 1:1
Medium: HSL_1800_110510 Medium parameters used: f = 1731.25 MHz; σ = 1.37 mho/m; ε_r = 39.7; ρ = 1000 kg/m^3
Ambient Temperature：23.3 ℃; Liquid Temperature：21.3 ℃

DASY5 Configuration:
- Probe: ET3DV6 - SN1788; ConvF(5.29, 5.29, 5.29); Calibrated: 2010-9-21
- Sensor-Surface: 4mm (Mechanical Surface Detection)
- Electronics: DAE4 Sn1210; Calibrated: 2010-11-18
- Phantom: SAM3; Type: SAM; Serial: TP-1477
- Measurement SW: DASY5, V5.2 Build 157; SEMCAD X Version 14.0 Build 57

Ch425/Area Scan (61x91x1): Measurement grid: dx=15mm, dy=15mm
Maximum value of SAR (interpolated) = 1.47 mW/g

Ch425/Zoom Scan (5x5x7)/Cube 0: Measurement grid: dx=8mm, dy=8mm, dz=5mm
Reference Value = 15.6 V/m; Power Drift = 0.092 dB
Peak SAR (extrapolated) = 2.06 W/kg
SAR(1 g) = 1.41 mW/g; SAR(10 g) = 0.888 mW/g
Maximum value of SAR (measured) = 1.5 mW/g

Ch425/Zoom Scan (5x5x7)/Cube 1: Measurement grid: dx=8mm, dy=8mm, dz=5mm
Reference Value = 15.6 V/m; Power Drift = 0.092 dB
Peak SAR (extrapolated) = 2.24 W/kg
SAR(1 g) = 1.35 mW/g; SAR(10 g) = 0.847 mW/g
Maximum value of SAR (measured) = 1.64 mW/g

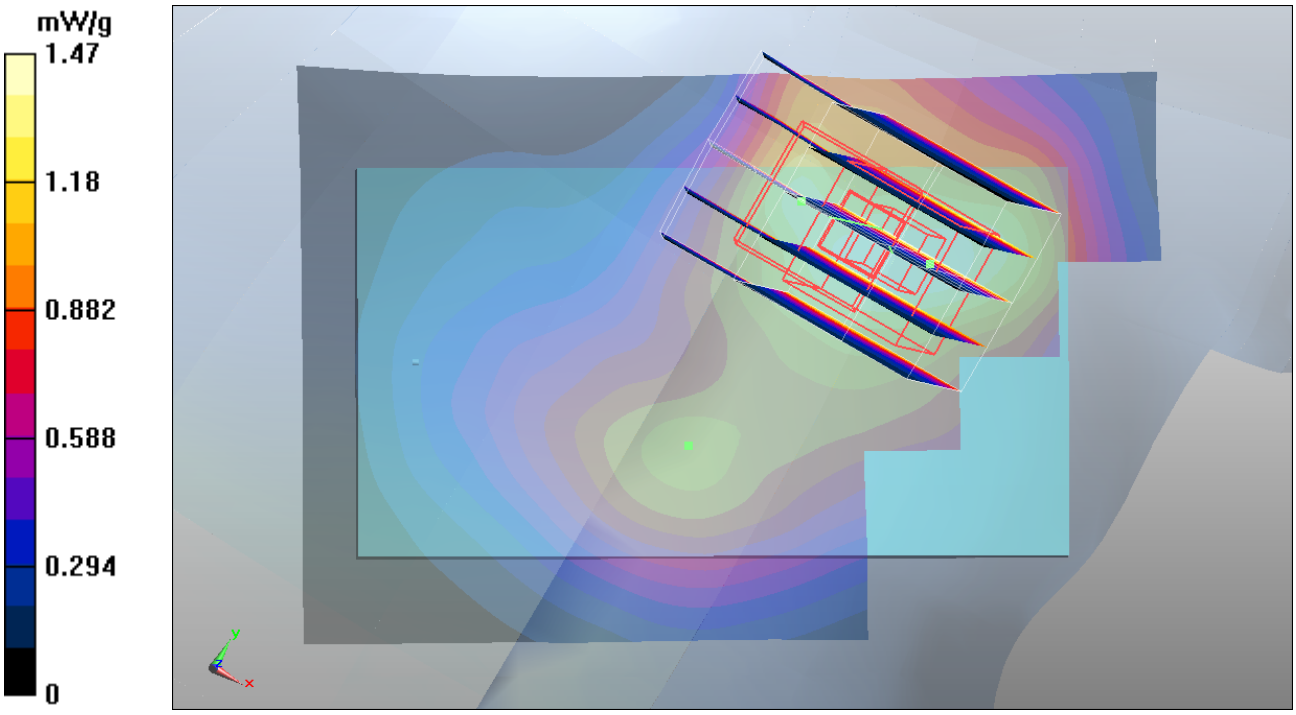
mW/g
1.47
1.18
0.882
0.588
0.294
0
y
x

#20 CDMA2000 BC15_RC3 SO55_Right Cheek_Ch425_2D

DUT: 142502

Communication System: CDMA2000; Frequency: 1731.25 MHz;Duty Cycle: 1:1
Medium: HSL_1800_110510 Medium parameters used: f = 1731.25 MHz; σ = 1.37 mho/m; ε_r = 39.7; ρ = 1000 kg/m^3
Ambient Temperature：23.3 ℃; Liquid Temperature：21.3 ℃

DASY5 Configuration:
- Probe: ET3DV6 - SN1788; ConvF(5.29, 5.29, 5.29); Calibrated: 2010-9-21
- Sensor-Surface: 4mm (Mechanical Surface Detection)
- Electronics: DAE4 Sn1210; Calibrated: 2010-11-18
- Phantom: SAM3; Type: SAM; Serial: TP-1477
- Measurement SW: DASY5, V5.2 Build 157; SEMCAD X Version 14.0 Build 57

Ch425/Area Scan (61x91x1): Measurement grid: dx=15mm, dy=15mm
Maximum value of SAR (interpolated) = 1.47 mW/g

Ch425/Zoom Scan (5x5x7)/Cube 0: Measurement grid: dx=8mm, dy=8mm, dz=5mm
Reference Value = 15.6 V/m; Power Drift = 0.092 dB
Peak SAR (extrapolated) = 2.06 W/kg
SAR(1 g) = 1.41 mW/g; SAR(10 g) = 0.888 mW/g
Maximum value of SAR (measured) = 1.5 mW/g

Ch425/Zoom Scan (5x5x7)/Cube 1: Measurement grid: dx=8mm, dy=8mm, dz=5mm
Reference Value = 15.6 V/m; Power Drift = 0.092 dB
Peak SAR (extrapolated) = 2.24 W/kg
SAR(1 g) = 1.35 mW/g; SAR(10 g) = 0.847 mW/g
Maximum value of SAR (measured) = 1.64 mW/g

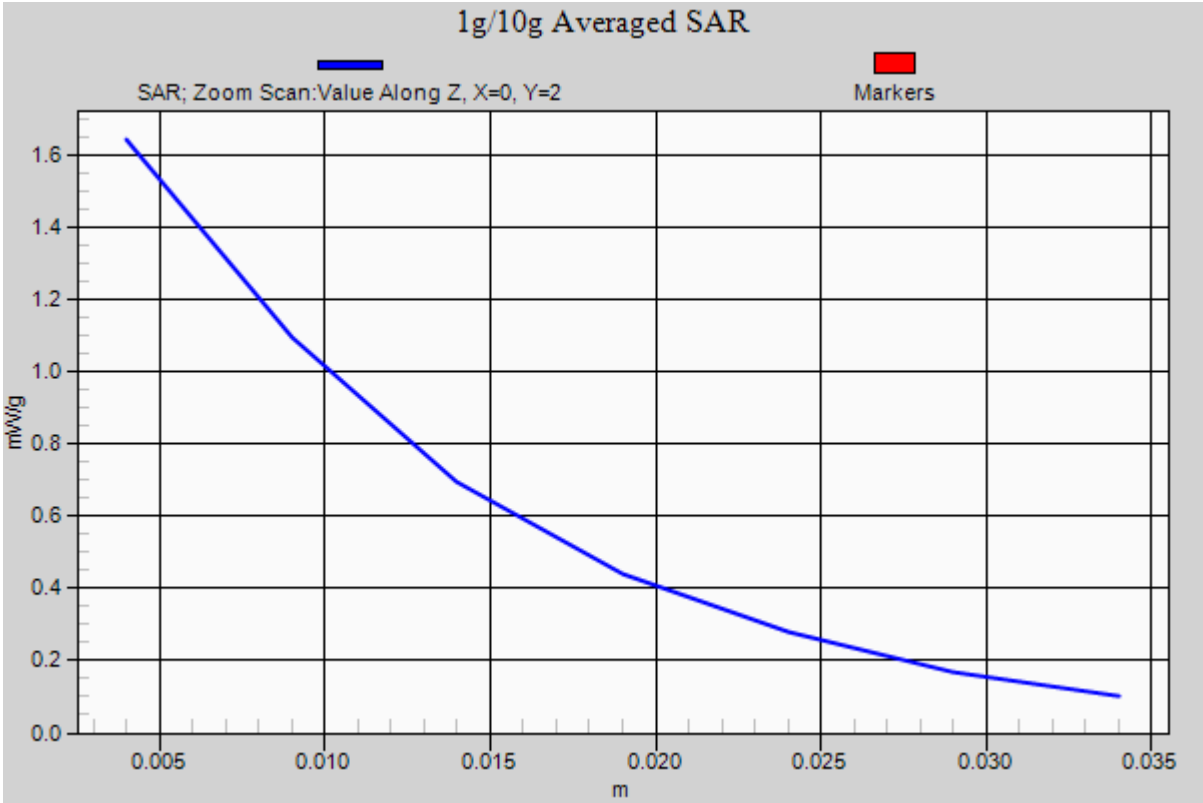
1g/10g Averaged SAR
SAR; Zoom Scan:Value Along Z, X=0, Y=2
Markers
mW/g
1.6
1.4
1.2
1.0
0.8
0.6
0.4
0.2
0.0
0.005
0.010
0.015
0.020
0.025
0.030
0.035
m

#21 CDMA2000 BC15_RC3 SO55_Right Tilted_Ch425

DUT: 142502

Communication System: CDMA2000; Frequency: 1731.25 MHz;Duty Cycle: 1:1
Medium: HSL_1800_110510 Medium parameters used: f = 1731.25 MHz; σ = 1.37 mho/m; ε_r = 39.7; ρ = 1000 kg/m^3
Ambient Temperature：23.3 ℃; Liquid Temperature：21.3 ℃

DASY5 Configuration:
- Probe: ET3DV6 - SN1788; ConvF(5.29, 5.29, 5.29); Calibrated: 2010-9-21
- Sensor-Surface: 4mm (Mechanical Surface Detection)
- Electronics: DAE4 Sn1210; Calibrated: 2010-11-18
- Phantom: SAM3; Type: SAM; Serial: TP-1477
- Measurement SW: DASY5, V5.2 Build 157; SEMCAD X Version 14.0 Build 57

Ch425/Area Scan (51x91x1): Measurement grid: dx=15mm, dy=15mm
Maximum value of SAR (interpolated) = 0.825 mW/g

Ch425/Zoom Scan (5x5x7)/Cube 0: Measurement grid: dx=8mm, dy=8mm, dz=5mm
Reference Value = 23.9 V/m; Power Drift = -0.0084 dB
Peak SAR (extrapolated) = 0.971 W/kg
SAR(1 g) = 0.678 mW/g; SAR(10 g) = 0.440 mW/g
Maximum value of SAR (measured) = 0.726 mW/g

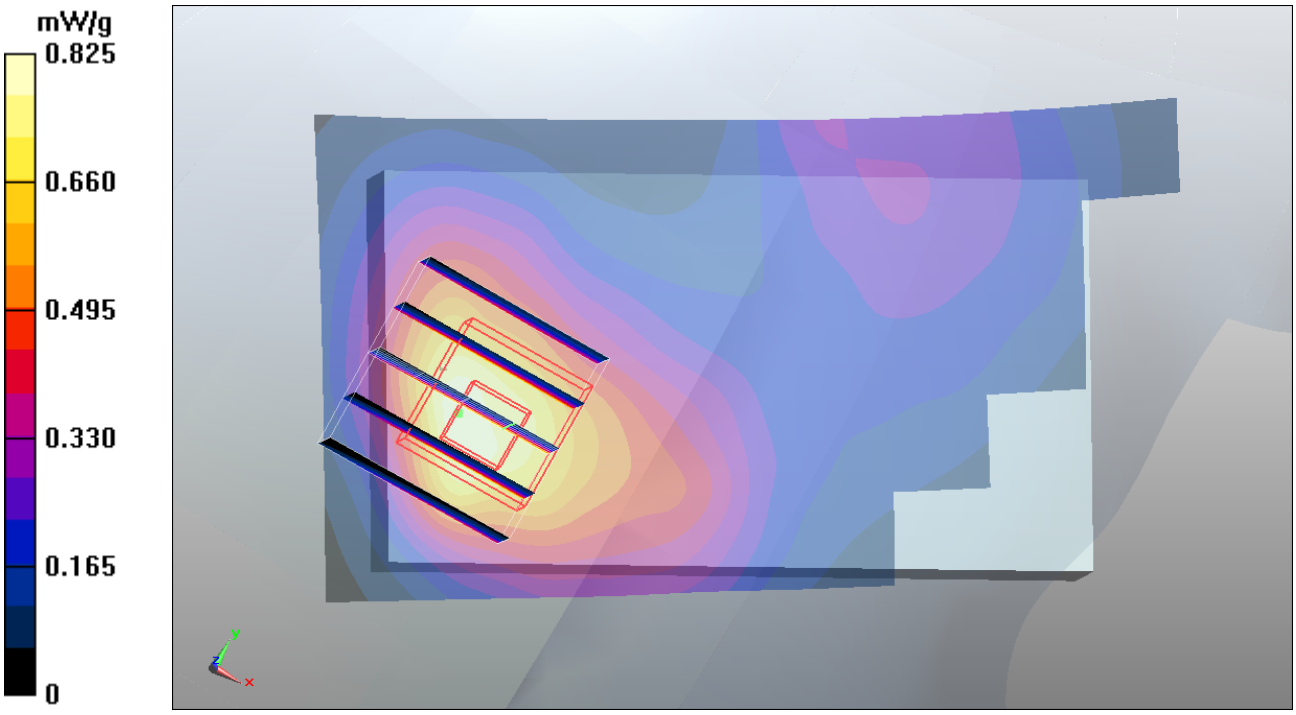
mW/g
0.825
0.660
0.495
0.330
0.165
0
y
z
x

#22 CDMA2000 BC15_RC3 SO55_Left Cheek_Ch425

DUT: 142502

Communication System: CDMA2000; Frequency: 1731.25 MHz;Duty Cycle: 1:1
Medium: HSL_1800_110510 Medium parameters used: f = 1731.25 MHz; σ = 1.37 mho/m; ε_r = 39.7; ρ = 1000 kg/m^3
Ambient Temperature：23.3 ℃; Liquid Temperature：21.3 ℃

DASY5 Configuration:
- Probe: ET3DV6 - SN1788; ConvF(5.29, 5.29, 5.29); Calibrated: 2010-9-21
- Sensor-Surface: 4mm (Mechanical Surface Detection)
- Electronics: DAE4 Sn1210; Calibrated: 2010-11-18
- Phantom: SAM3; Type: SAM; Serial: TP-1477
- Measurement SW: DASY5, V5.2 Build 157; SEMCAD X Version 14.0 Build 57

Ch425/Area Scan (61x91x1): Measurement grid: dx=15mm, dy=15mm
Maximum value of SAR (interpolated) = 1.25 mW/g

Ch425/Zoom Scan (5x5x7)/Cube 0: Measurement grid: dx=8mm, dy=8mm, dz=5mm
Reference Value = 15.5 V/m; Power Drift = 0.098 dB
Peak SAR (extrapolated) = 1.56 W/kg
SAR(1 g) = 1.14 mW/g; SAR(10 g) = 0.758 mW/g
Maximum value of SAR (measured) = 1.23 mW/g

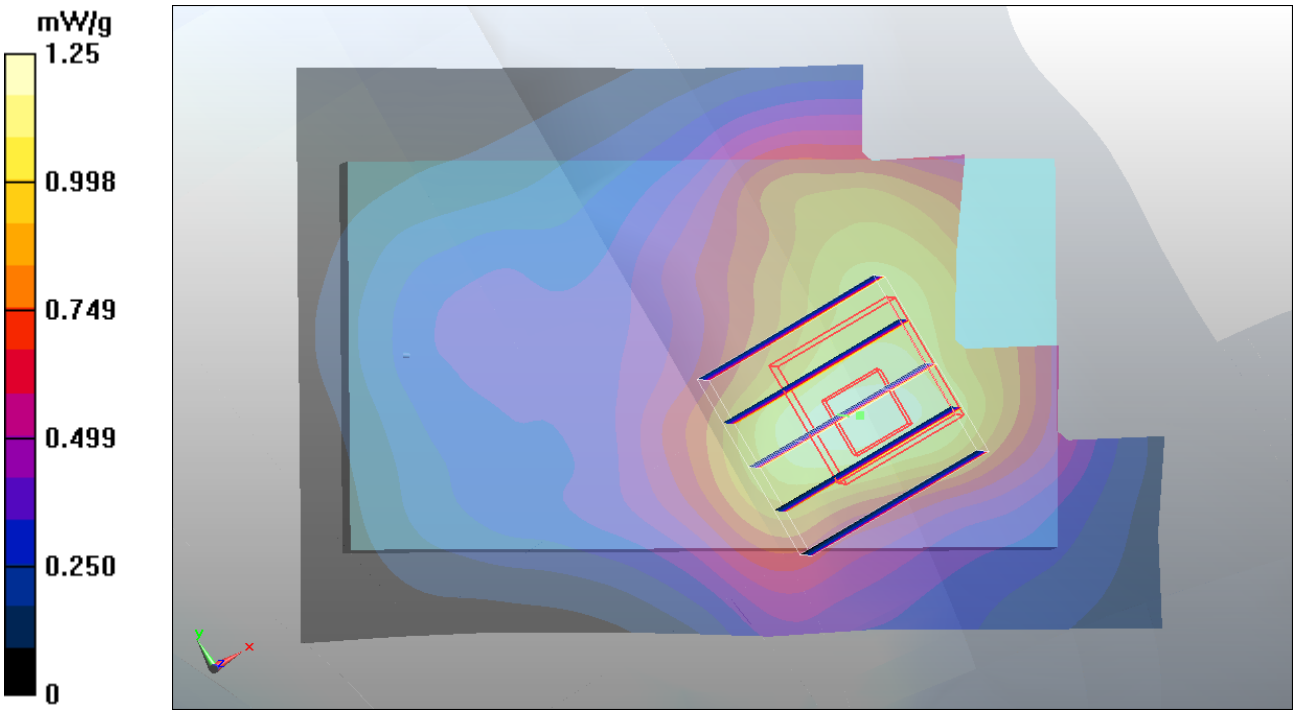
mW/g
1.25
0.998
0.749
0.499
0.250
0

#23 CDMA2000 BC15_RC3 SO55_Left Tilted_Ch425

DUT: 142502

Communication System: CDMA2000; Frequency: 1731.25 MHz;Duty Cycle: 1:1
Medium: HSL_1800_110510 Medium parameters used: f = 1731.25 MHz; σ = 1.37 mho/m; ε_r = 39.7; ρ = 1000 kg/m^3
Ambient Temperature：23.3 ℃; Liquid Temperature：21.3 ℃

DASY5 Configuration:
- Probe: ET3DV6 - SN1788; ConvF(5.29, 5.29, 5.29); Calibrated: 2010-9-21
- Sensor-Surface: 4mm (Mechanical Surface Detection)
- Electronics: DAE4 Sn1210; Calibrated: 2010-11-18
- Phantom: SAM3; Type: SAM; Serial: TP-1477
- Measurement SW: DASY5, V5.2 Build 157; SEMCAD X Version 14.0 Build 57

Ch425/Area Scan (51x91x1): Measurement grid: dx=15mm, dy=15mm
Maximum value of SAR (interpolated) = 0.635 mW/g

Ch425/Zoom Scan (5x5x7)/Cube 0: Measurement grid: dx=8mm, dy=8mm, dz=5mm
Reference Value = 22.1 V/m; Power Drift = -0.091 dB
Peak SAR (extrapolated) = 0.772 W/kg
SAR(1 g) = 0.554 mW/g; SAR(10 g) = 0.358 mW/g
Maximum value of SAR (measured) = 0.605 mW/g

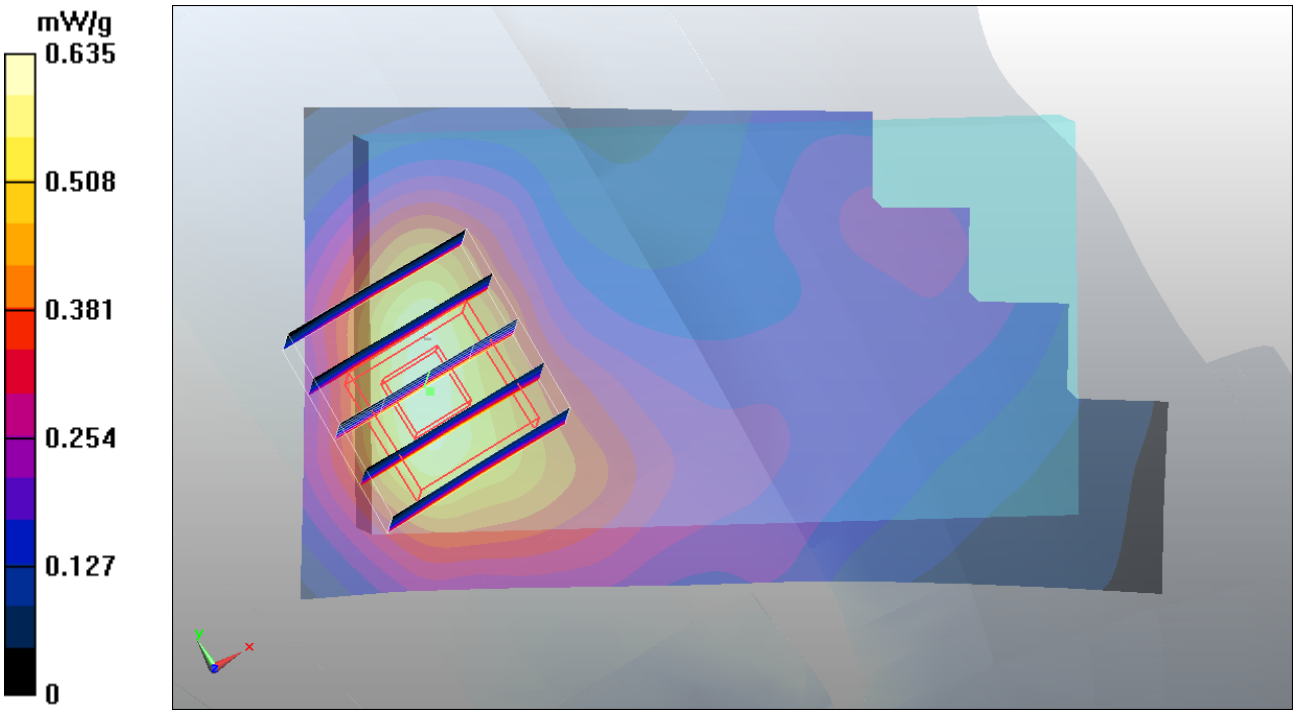
mW/g
0.635
0.508
0.381
0.254
0.127
0
Y
X

#24 CDMA2000 BC15_RC3 SO55_Right Cheek_Ch25

DUT: 142502

Communication System: CDMA2000; Frequency: 1711.25 MHz;Duty Cycle: 1:1
Medium: HSL_1800_110510 Medium parameters used: f = 1711.25 MHz; σ = 1.35 mho/m; ε_r = 40; ρ = 1000 kg/m^3
Ambient Temperature：23.3 ℃; Liquid Temperature：21.3 ℃

DASY5 Configuration:
- Probe: ET3DV6 - SN1788; ConvF(5.29, 5.29, 5.29); Calibrated: 2010-9-21
- Sensor-Surface: 4mm (Mechanical Surface Detection)
- Electronics: DAE4 Sn1210; Calibrated: 2010-11-18
- Phantom: SAM3; Type: SAM; Serial: TP-1477
- Measurement SW: DASY5, V5.2 Build 157; SEMCAD X Version 14.0 Build 57

Ch25/Area Scan (61x91x1): Measurement grid: dx=15mm, dy=15mm
Maximum value of SAR (interpolated) = 1.42 mW/g

Ch25/Zoom Scan (5x5x7)/Cube 0: Measurement grid: dx=8mm, dy=8mm, dz=5mm
Reference Value = 14.6 V/m; Power Drift = 0.117 dB
Peak SAR (extrapolated) = 2.02 W/kg
SAR(1 g) = 1.36 mW/g; SAR(10 g) = 0.850 mW/g
Maximum value of SAR (measured) = 1.47 mW/g

Ch25/Zoom Scan (5x5x7)/Cube 1: Measurement grid: dx=8mm, dy=8mm, dz=5mm
Reference Value = 14.6 V/m; Power Drift = 0.117 dB
Peak SAR (extrapolated) = 1.25 W/kg
SAR(1 g) = 0.954 mW/g; SAR(10 g) = 0.671 mW/g
Maximum value of SAR (measured) = 1.04 mW/g

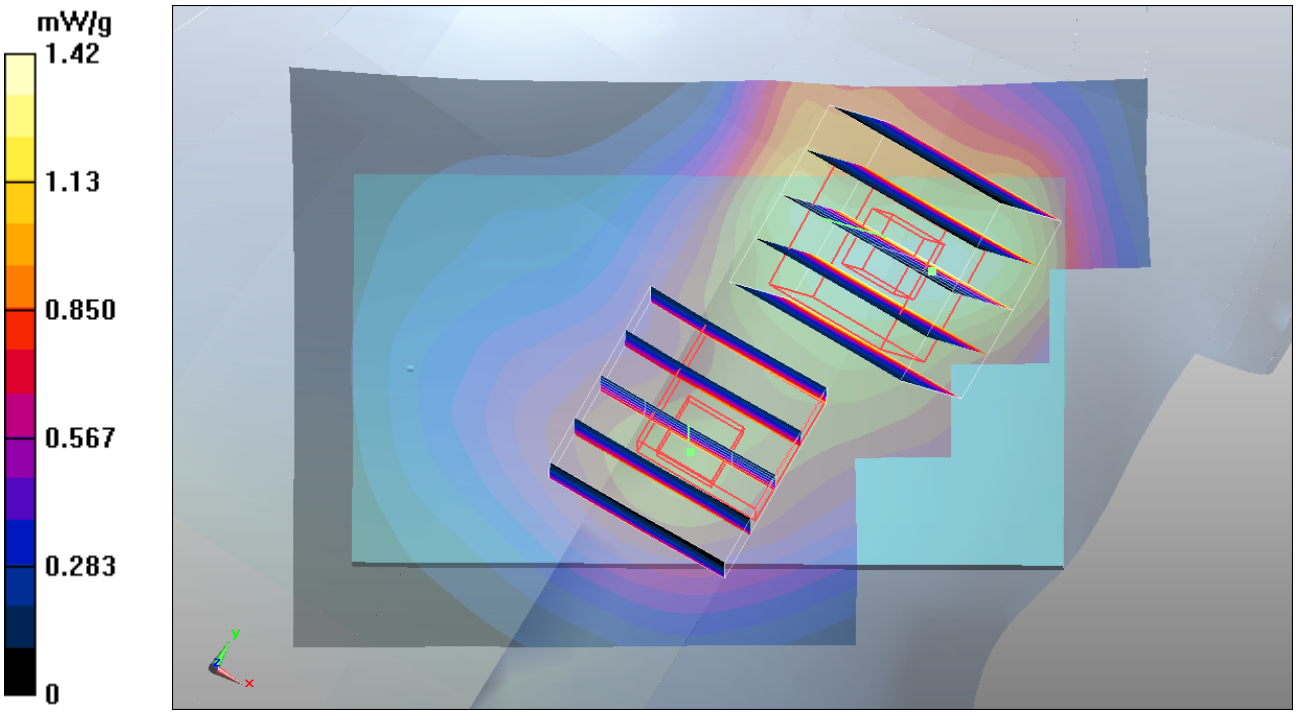
mW/g
1.42
1.13
0.850
0.567
0.283
0

#25 CDMA2000 BC15_RC3 SO55_Right Cheek_Ch875

DUT: 142502

Communication System: CDMA2000; Frequency: 1753.75 MHz;Duty Cycle: 1:1
Medium: HSL_1800_110510 Medium parameters used: f = 1754 MHz; σ = 1.39 mho/m; ε_r = 39.6; ρ = 1000 kg/m^3
Ambient Temperature：23.3 ℃; Liquid Temperature：21.3 ℃

DASY5 Configuration:
- Probe: ET3DV6 - SN1788; ConvF(5.29, 5.29, 5.29); Calibrated: 2010-9-21
- Sensor-Surface: 4mm (Mechanical Surface Detection)
- Electronics: DAE4 Sn1210; Calibrated: 2010-11-18
- Phantom: SAM3; Type: SAM; Serial: TP-1477
- Measurement SW: DASY5, V5.2 Build 157; SEMCAD X Version 14.0 Build 57

Ch875/Area Scan (61x91x1): Measurement grid: dx=15mm, dy=15mm
Maximum value of SAR (interpolated) = 1.44 mW/g

Ch875/Zoom Scan (5x5x7)/Cube 0: Measurement grid: dx=8mm, dy=8mm, dz=5mm
Reference Value = 15.6 V/m; Power Drift = -0.038 dB
Peak SAR (extrapolated) = 2.04 W/kg
SAR(1 g) = 1.37 mW/g; SAR(10 g) = 0.857 mW/g
Maximum value of SAR (measured) = 1.45 mW/g

Ch875/Zoom Scan (5x5x7)/Cube 1: Measurement grid: dx=8mm, dy=8mm, dz=5mm
Reference Value = 15.6 V/m; Power Drift = -0.038 dB
Peak SAR (extrapolated) = 1.2 W/kg
SAR(1 g) = 0.889 mW/g; SAR(10 g) = 0.626 mW/g
Maximum value of SAR (measured) = 0.926 mW/g

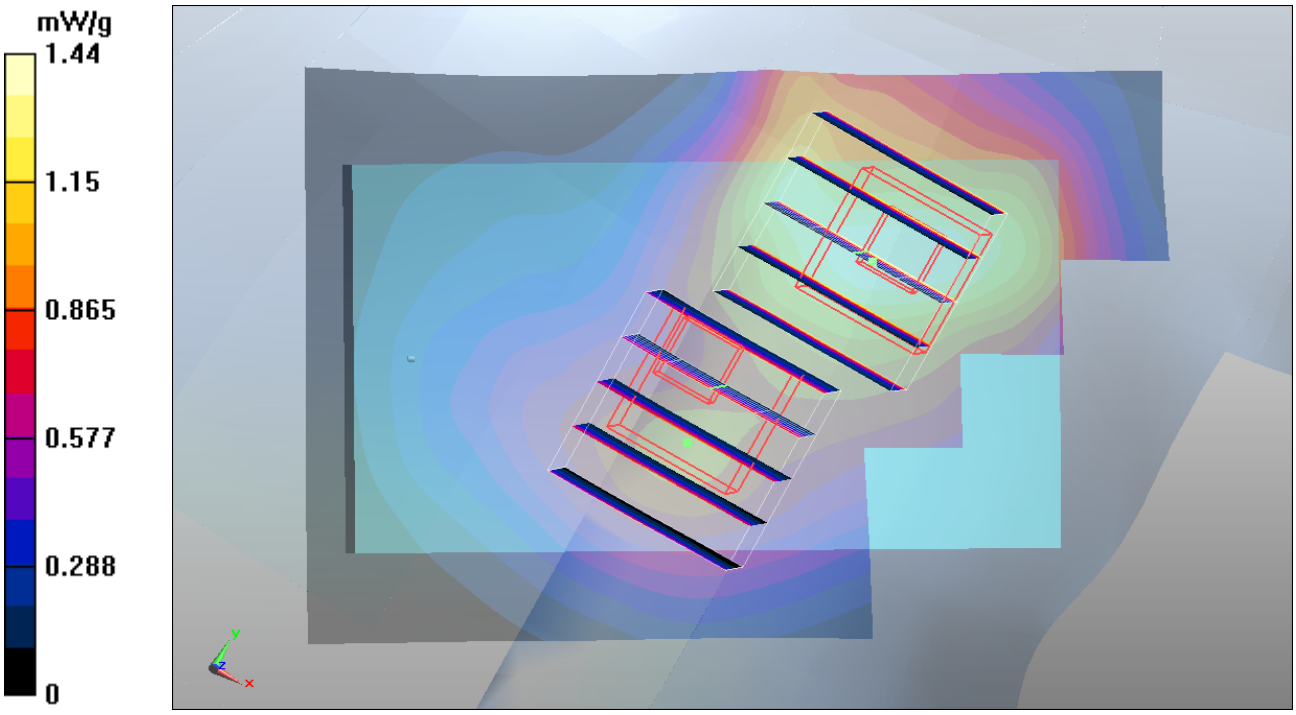
mW/g
1.44
1.15
0.865
0.577
0.288
0
y
z
x

#26 CDMA2000 BC15_RC3 SO55_Left Cheek_Ch25

DUT: 142502

Communication System: CDMA2000; Frequency: 1711.25 MHz;Duty Cycle: 1:1
Medium: HSL_1800_110510 Medium parameters used: f = 1711.25 MHz; σ = 1.35 mho/m; ε_r = 40; ρ = 1000 kg/m^3
Ambient Temperature：23.3 ℃; Liquid Temperature：21.3 ℃

DASY5 Configuration:
- Probe: ET3DV6 - SN1788; ConvF(5.29, 5.29, 5.29); Calibrated: 2010-9-21
- Sensor-Surface: 4mm (Mechanical Surface Detection)
- Electronics: DAE4 Sn1210; Calibrated: 2010-11-18
- Phantom: SAM3; Type: SAM; Serial: TP-1477
- Measurement SW: DASY5, V5.2 Build 157; SEMCAD X Version 14.0 Build 57

Ch25/Area Scan (61x91x1): Measurement grid: dx=15mm, dy=15mm
Maximum value of SAR (interpolated) = 1.19 mW/g

Ch25/Zoom Scan (5x5x7)/Cube 0: Measurement grid: dx=8mm, dy=8mm, dz=5mm
Reference Value = 15 V/m; Power Drift = 0.083 dB
Peak SAR (extrapolated) = 1.49 W/kg
SAR(1 g) = 1.09 mW/g; SAR(10 g) = 0.730 mW/g
Maximum value of SAR (measured) = 1.18 mW/g

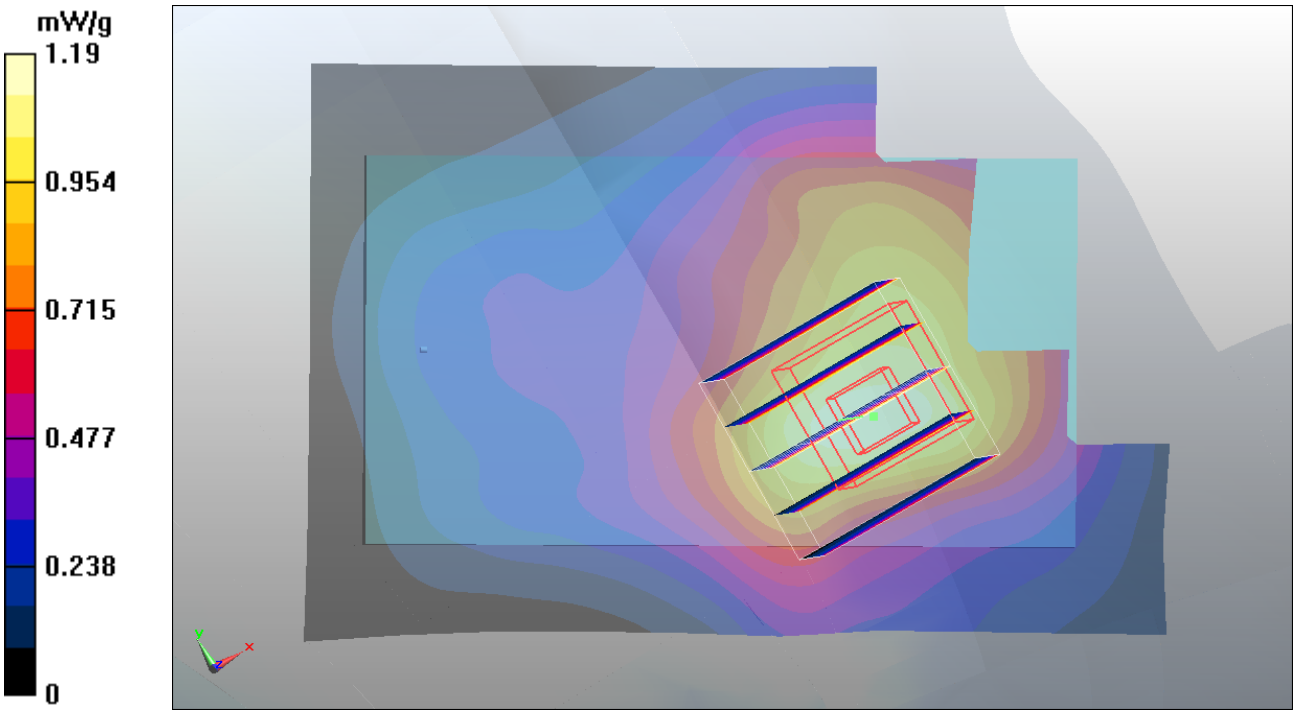
mW/g
1.19
0.954
0.715
0.477
0.238
0

#27 CDMA2000 BC15_RC3 SO55_Left Cheek_Ch875

DUT: 142502

Communication System: CDMA2000; Frequency: 1753.75 MHz;Duty Cycle: 1:1
Medium: HSL_1800_110510 Medium parameters used: f = 1754 MHz; σ = 1.39 mho/m; ε_r = 39.6; ρ = 1000 kg/m^3
Ambient Temperature：23.3 ℃; Liquid Temperature：21.3 ℃

DASY5 Configuration:
- Probe: ET3DV6 - SN1788; ConvF(5.29, 5.29, 5.29); Calibrated: 2010-9-21
- Sensor-Surface: 4mm (Mechanical Surface Detection)
- Electronics: DAE4 Sn1210; Calibrated: 2010-11-18
- Phantom: SAM3; Type: SAM; Serial: TP-1477
- Measurement SW: DASY5, V5.2 Build 157; SEMCAD X Version 14.0 Build 57

Ch875/Area Scan (61x91x1): Measurement grid: dx=15mm, dy=15mm
Maximum value of SAR (interpolated) = 1.12 mW/g

Ch875/Zoom Scan (5x5x7)/Cube 0: Measurement grid: dx=8mm, dy=8mm, dz=5mm
Reference Value = 16.1 V/m; Power Drift = -0.113 dB
Peak SAR (extrapolated) = 1.4 W/kg
SAR(1 g) = 1.02 mW/g; SAR(10 g) = 0.681 mW/g
Maximum value of SAR (measured) = 1.09 mW/g

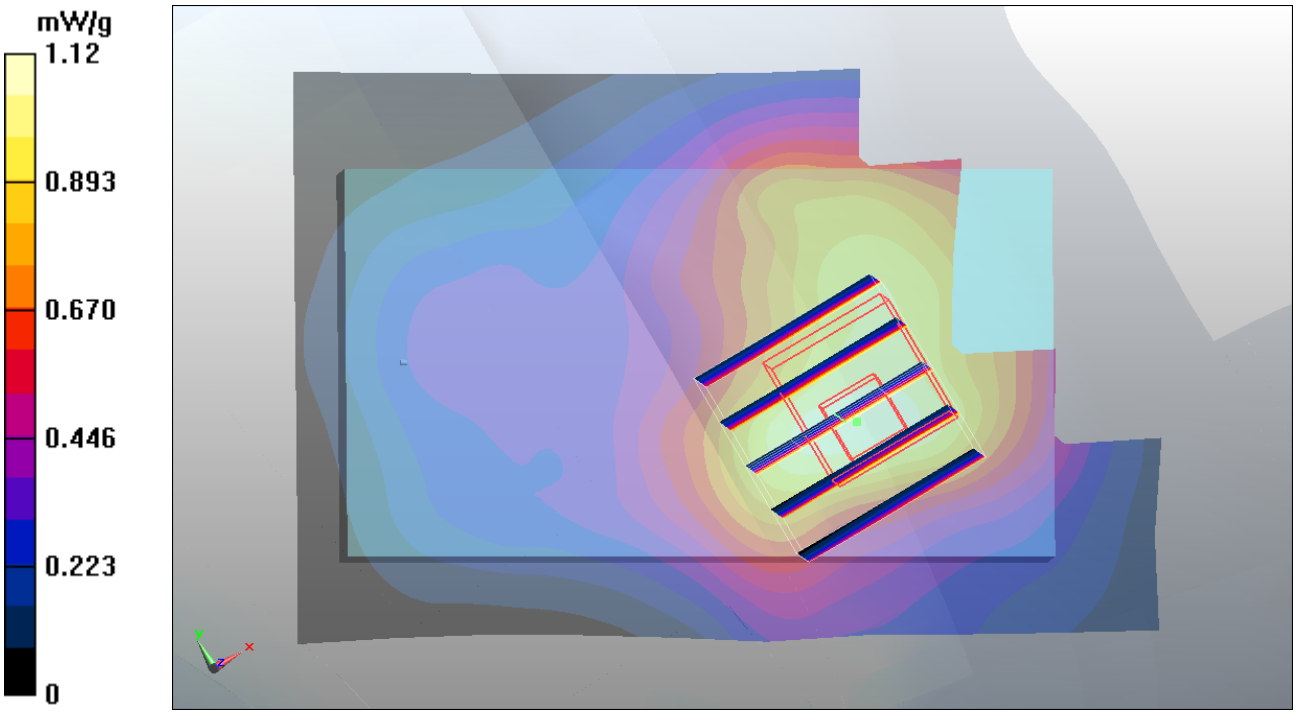
mW/g
1.12
0.893
0.670
0.446
0.223
0

#12 CDMA2000 BC1_RC3 SO55_Right Cheek_Ch1175

DUT: 142502

Communication System: CDMA2000; Frequency: 1908.75 MHz;Duty Cycle: 1:1
Medium: HSL_1900_110509 Medium parameters used: f = 1909 MHz; σ = 1.42 mho/m; ε_r = 39.6; ρ = 1000 kg/m^3
Ambient Temperature：23.4 ℃; Liquid Temperature：21.4 ℃

DASY5 Configuration:
- Probe: ET3DV6 - SN1788; ConvF(5.03, 5.03, 5.03); Calibrated: 2010-9-21
- Sensor-Surface: 4mm (Mechanical Surface Detection)
- Electronics: DAE4 Sn1210; Calibrated: 2010-11-18
- Phantom: SAM1; Type: SAM; Serial: TP-1479
- Measurement SW: DASY5, V5.2 Build 157; SEMCAD X Version 14.0 Build 57

Ch1175/Area Scan (51x91x1): Measurement grid: dx=15mm, dy=15mm
Maximum value of SAR (interpolated) = 1.53 mW/g

Ch1175/Zoom Scan (5x5x7)/Cube 0: Measurement grid: dx=8mm, dy=8mm, dz=5mm
Reference Value = 12.7 V/m; Power Drift = -0.053 dB
Peak SAR (extrapolated) = 2.08 W/kg
SAR(1 g) = 1.42 mW/g; SAR(10 g) = 0.909 mW/g
Maximum value of SAR (measured) = 1.51 mW/g

Ch1175/Zoom Scan (5x5x7)/Cube 1: Measurement grid: dx=8mm, dy=8mm, dz=5mm
Reference Value = 12.7 V/m; Power Drift = -0.053 dB
Peak SAR (extrapolated) = 1.8 W/kg
SAR(1 g) = 1.33 mW/g; SAR(10 g) = 0.774 mW/g
Maximum value of SAR (measured) = 1.42 mW/g

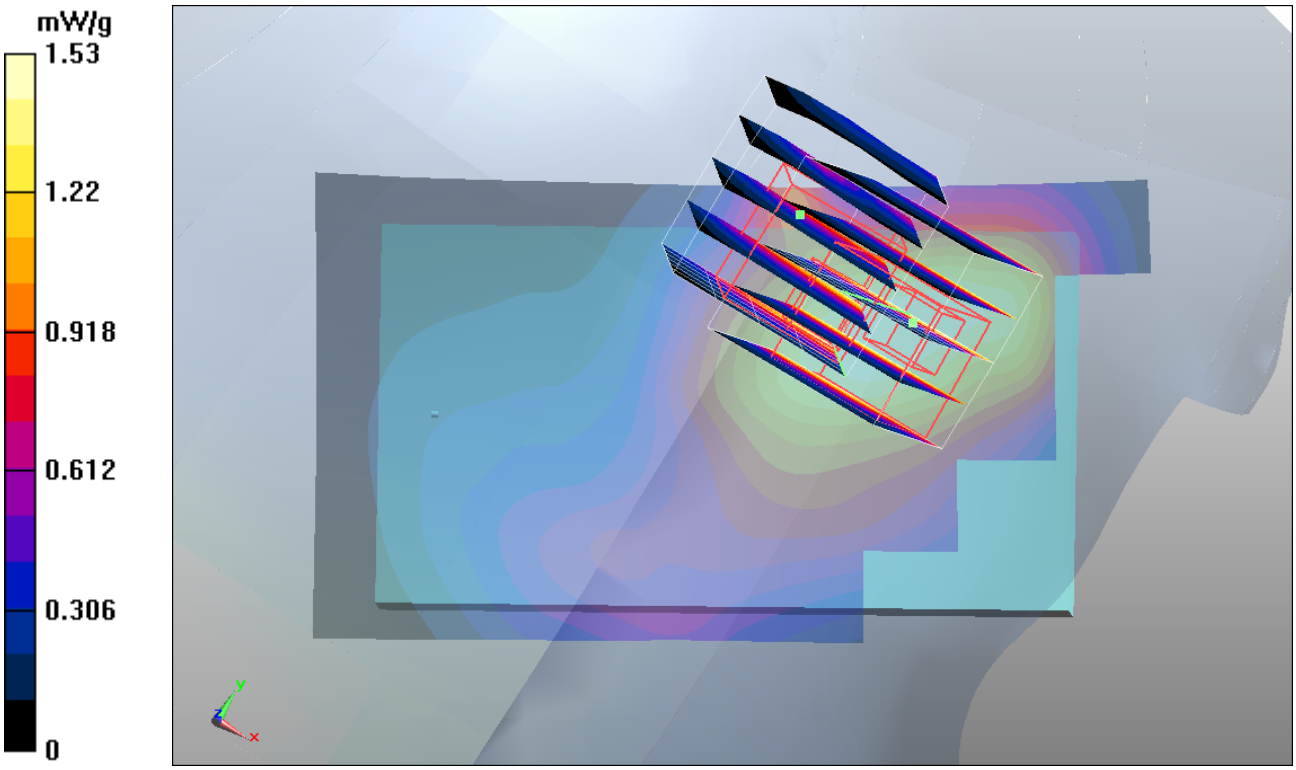
mW/g
1.53
1.22
0.918
0.612
0.306
0
y
x

#13 CDMA2000 BC1_RC3 SO55_Right Tilted_Ch1175

DUT: 142502

Communication System: CDMA2000; Frequency: 1908.75 MHz;Duty Cycle: 1:1
Medium: HSL_1900_110509 Medium parameters used: f = 1909 MHz; σ = 1.42 mho/m; ε_r = 39.6; ρ = 1000 kg/m^3
Ambient Temperature：23.4 ℃; Liquid Temperature：21.4 ℃

DASY5 Configuration:
- Probe: ET3DV6 - SN1788; ConvF(5.03, 5.03, 5.03); Calibrated: 2010-9-21
- Sensor-Surface: 4mm (Mechanical Surface Detection)
- Electronics: DAE4 Sn1210; Calibrated: 2010-11-18
- Phantom: SAM1; Type: SAM; Serial: TP-1479
- Measurement SW: DASY5, V5.2 Build 157; SEMCAD X Version 14.0 Build 57

Ch1175/Area Scan (51x91x1): Measurement grid: dx=15mm, dy=15mm
Maximum value of SAR (interpolated) = 0.621 mW/g

Ch1175/Zoom Scan (5x5x7)/Cube 0: Measurement grid: dx=8mm, dy=8mm, dz=5mm
Reference Value = 18.4 V/m; Power Drift = -0.061 dB
Peak SAR (extrapolated) = 0.718 W/kg
SAR(1 g) = 0.499 mW/g; SAR(10 g) = 0.310 mW/g
Maximum value of SAR (measured) = 0.538 mW/g

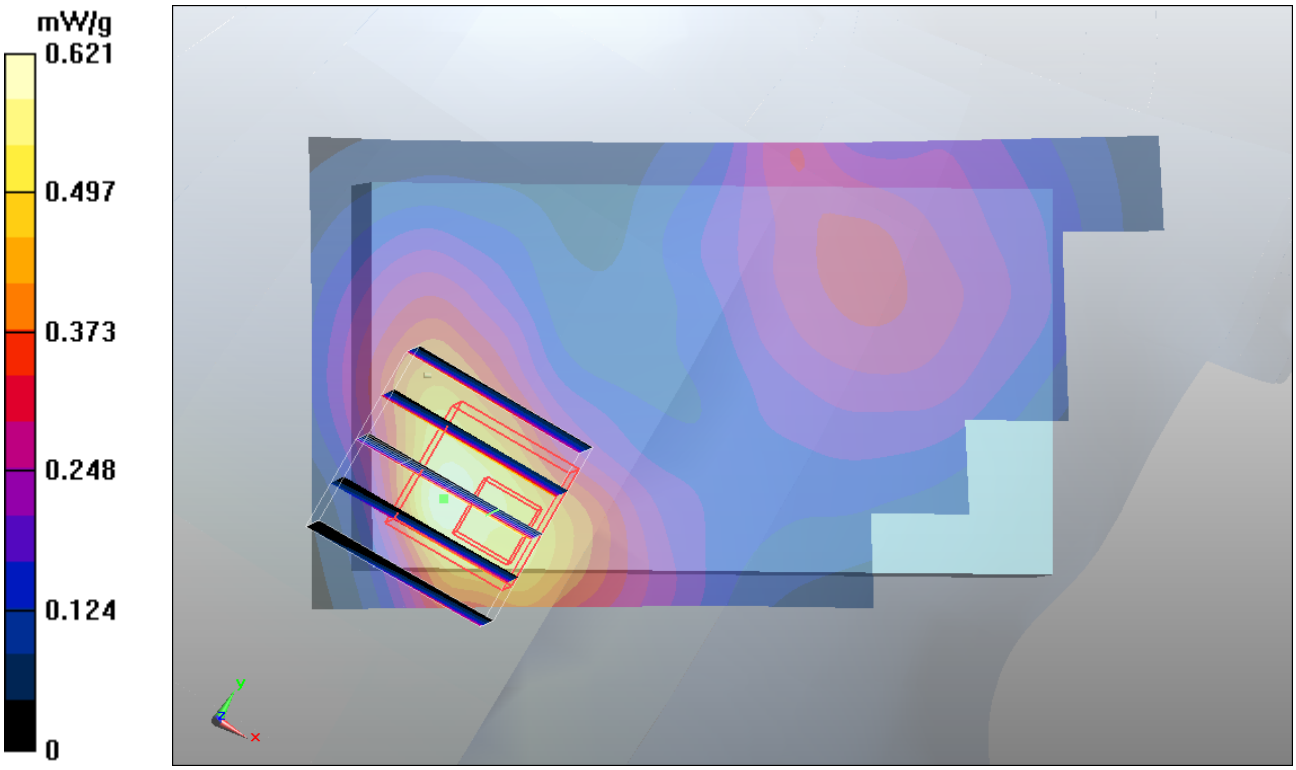
mW/g
0.621
0.497
0.373
0.248
0.124
0
y
z
x

#14 CDMA2000 BC1_RC3 SO55_Left Cheek_Ch1175

DUT: 142502

Communication System: CDMA2000; Frequency: 1908.75 MHz;Duty Cycle: 1:1
Medium: HSL_1900_110509 Medium parameters used: f = 1909 MHz; σ = 1.42 mho/m; ε_r = 39.6; ρ = 1000 kg/m^3
Ambient Temperature：23.4 ℃; Liquid Temperature：21.4 ℃

DASY5 Configuration:
- Probe: ET3DV6 - SN1788; ConvF(5.03, 5.03, 5.03); Calibrated: 2010-9-21
- Sensor-Surface: 4mm (Mechanical Surface Detection)
- Electronics: DAE4 Sn1210; Calibrated: 2010-11-18
- Phantom: SAM1; Type: SAM; Serial: TP-1479
- Measurement SW: DASY5, V5.2 Build 157; SEMCAD X Version 14.0 Build 57

Ch1175/Area Scan (61x91x1): Measurement grid: dx=15mm, dy=15mm
Maximum value of SAR (interpolated) = 1.12 mW/g

Ch1175/Zoom Scan (5x5x7)/Cube 0: Measurement grid: dx=8mm, dy=8mm, dz=5mm
Reference Value = 13.2 V/m; Power Drift = 0.028 dB
Peak SAR (extrapolated) = 1.36 W/kg
SAR(1 g) = 1 mW/g; SAR(10 g) = 0.681 mW/g
Maximum value of SAR (measured) = 1.07 mW/g

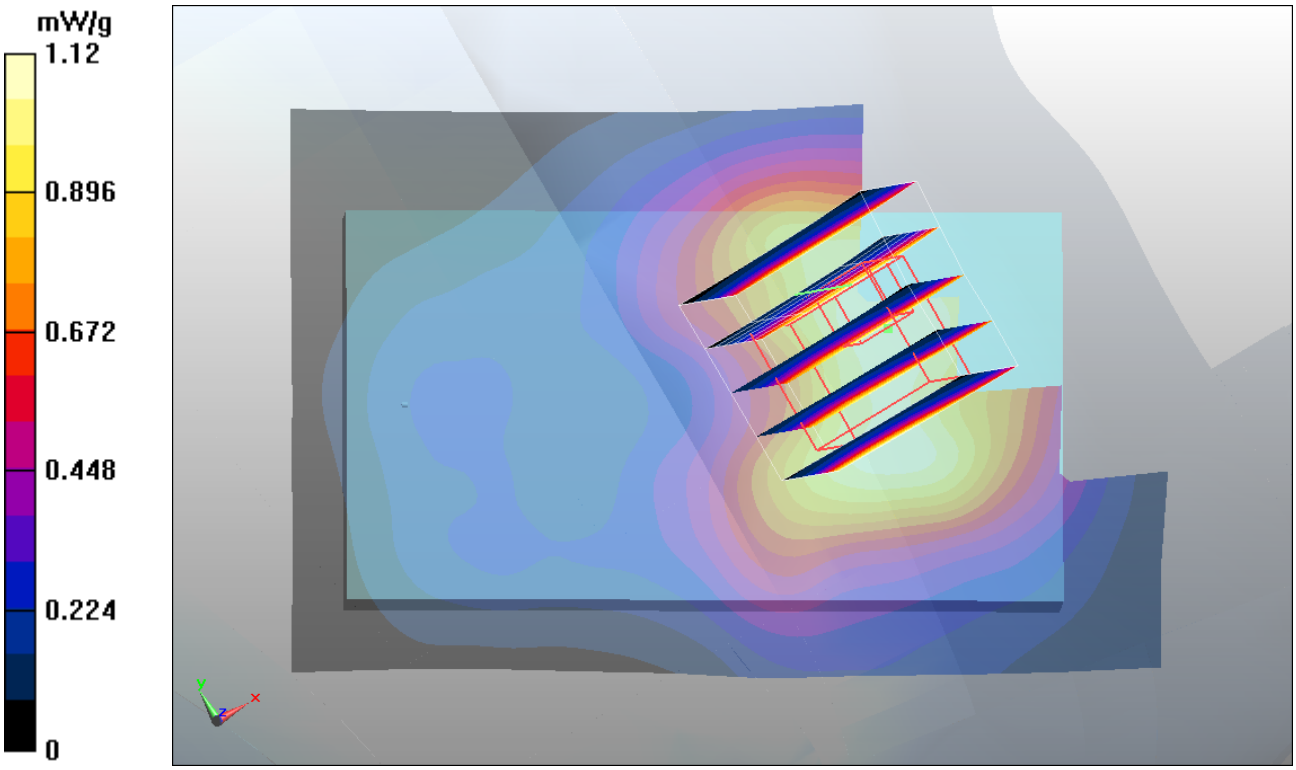
mW/g
1.12
0.896
0.672
0.448
0.224
0
Y
Z
X

#15 CDMA2000 BC1_RC3 SO55_Left Tilted_Ch1175

DUT: 142502

Communication System: CDMA2000; Frequency: 1908.75 MHz;Duty Cycle: 1:1
Medium: HSL_1900_110509 Medium parameters used: f = 1909 MHz; σ = 1.42 mho/m; ε_r = 39.6; ρ = 1000 kg/m^3
Ambient Temperature：23.4 ℃; Liquid Temperature：21.4 ℃

DASY5 Configuration:
- Probe: ET3DV6 - SN1788; ConvF(5.03, 5.03, 5.03); Calibrated: 2010-9-21
- Sensor-Surface: 4mm (Mechanical Surface Detection)
- Electronics: DAE4 Sn1210; Calibrated: 2010-11-18
- Phantom: SAM1; Type: SAM; Serial: TP-1479
- Measurement SW: DASY5, V5.2 Build 157; SEMCAD X Version 14.0 Build 57

Ch1175/Area Scan (51x91x1): Measurement grid: dx=15mm, dy=15mm
Maximum value of SAR (interpolated) = 0.414 mW/g

Ch1175/Zoom Scan (5x5x7)/Cube 0: Measurement grid: dx=8mm, dy=8mm, dz=5mm
Reference Value = 18 V/m; Power Drift = -0.087 dB
Peak SAR (extrapolated) = 0.543 W/kg
SAR(1 g) = 0.368 mW/g; SAR(10 g) = 0.225 mW/g
Maximum value of SAR (measured) = 0.398 mW/g

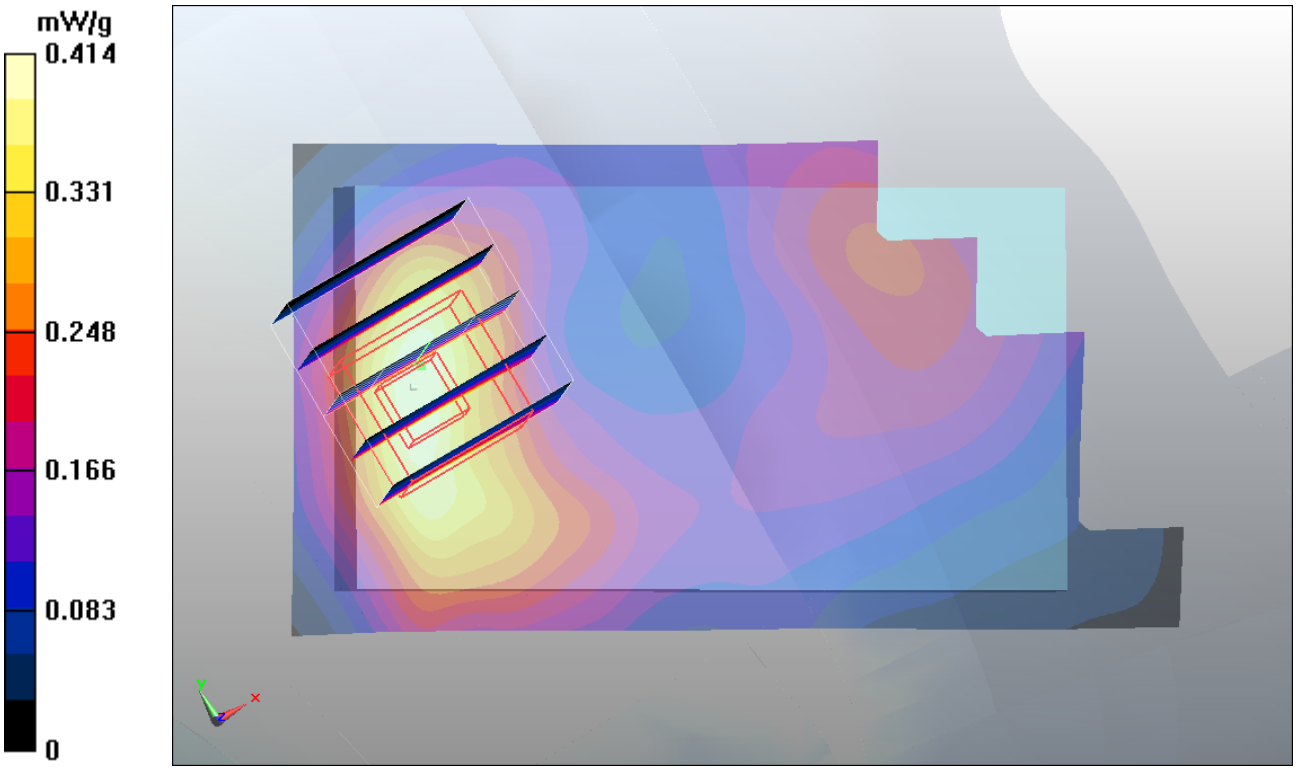
mW/g
0.414
0.331
0.248
0.166
0.083
0

#16 CDMA2000 BC1_RC3 SO55_Right Cheek_Ch25

DUT: 142502

Communication System: CDMA2000; Frequency: 1851.25 MHz;Duty Cycle: 1:1
Medium: HSL_1900_110509 Medium parameters used: f = 1851.25 MHz; σ = 1.36 mho/m; ε_r = 39.8; ρ = 1000 kg/m^3
Ambient Temperature：23.4 ℃; Liquid Temperature：21.4 ℃

DASY5 Configuration:
- Probe: ET3DV6 - SN1788; ConvF(5.03, 5.03, 5.03); Calibrated: 2010-9-21
- Sensor-Surface: 4mm (Mechanical Surface Detection)
- Electronics: DAE4 Sn1210; Calibrated: 2010-11-18
- Phantom: SAM1; Type: SAM; Serial: TP-1479
- Measurement SW: DASY5, V5.2 Build 157; SEMCAD X Version 14.0 Build 57

Ch25/Area Scan (61x91x1): Measurement grid: dx=15mm, dy=15mm
Maximum value of SAR (interpolated) = 1.55 mW/g

Ch25/Zoom Scan (5x5x7)/Cube 0: Measurement grid: dx=8mm, dy=8mm, dz=5mm
Reference Value = 14.4 V/m; Power Drift = -0.134 dB
Peak SAR (extrapolated) = 2.13 W/kg
SAR(1 g) = 1.45 mW/g; SAR(10 g) = 0.933 mW/g
Maximum value of SAR (measured) = 1.56 mW/g

Ch25/Zoom Scan (5x5x7)/Cube 1: Measurement grid: dx=8mm, dy=8mm, dz=5mm
Reference Value = 14.4 V/m; Power Drift = -0.134 dB
Peak SAR (extrapolated) = 1.77 W/kg
SAR(1 g) = 1.2 mW/g; SAR(10 g) = 0.712 mW/g
Maximum value of SAR (measured) = 1.37 mW/g

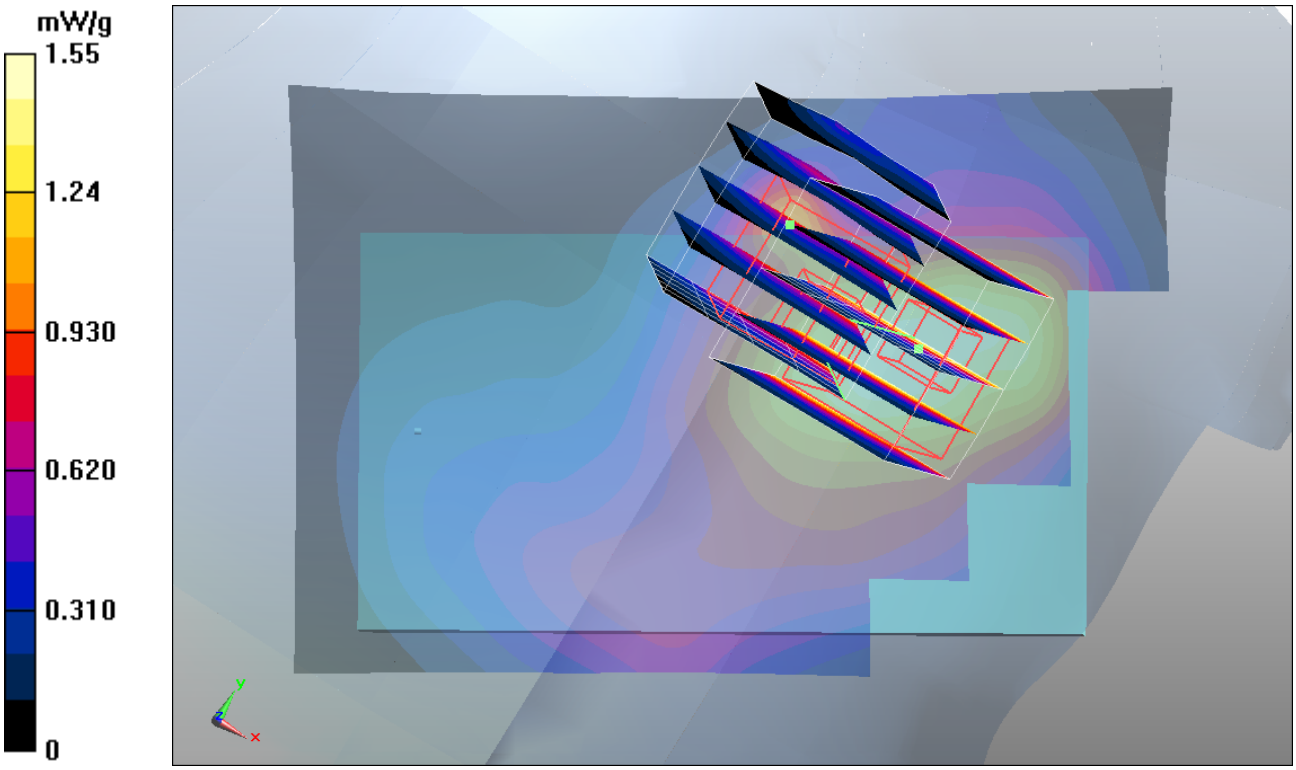
mW/g
1.55
1.24
0.930
0.620
0.310
0
y
x

#16 CDMA2000 BC1_RC3 SO55_Right Cheek_Ch25_2D

DUT: 142502

Communication System: CDMA2000; Frequency: 1851.25 MHz;Duty Cycle: 1:1
Medium: HSL_1900_110509 Medium parameters used: f = 1851.25 MHz; σ = 1.36 mho/m; ε_r = 39.8; ρ = 1000 kg/m^3
Ambient Temperature：23.4 ℃; Liquid Temperature：21.4 ℃

DASY5 Configuration:
- Probe: ET3DV6 - SN1788; ConvF(5.03, 5.03, 5.03); Calibrated: 2010-9-21
- Sensor-Surface: 4mm (Mechanical Surface Detection)
- Electronics: DAE4 Sn1210; Calibrated: 2010-11-18
- Phantom: SAM1; Type: SAM; Serial: TP-1479
- Measurement SW: DASY5, V5.2 Build 157; SEMCAD X Version 14.0 Build 57

Ch25/Area Scan (61x91x1): Measurement grid: dx=15mm, dy=15mm
Maximum value of SAR (interpolated) = 1.55 mW/g

Ch25/Zoom Scan (5x5x7)/Cube 0: Measurement grid: dx=8mm, dy=8mm, dz=5mm
Reference Value = 14.4 V/m; Power Drift = -0.134 dB
Peak SAR (extrapolated) = 2.13 W/kg
SAR(1 g) = 1.45 mW/g; SAR(10 g) = 0.933 mW/g
Maximum value of SAR (measured) = 1.56 mW/g

Ch25/Zoom Scan (5x5x7)/Cube 1: Measurement grid: dx=8mm, dy=8mm, dz=5mm
Reference Value = 14.4 V/m; Power Drift = -0.134 dB
Peak SAR (extrapolated) = 1.77 W/kg
SAR(1 g) = 1.2 mW/g; SAR(10 g) = 0.712 mW/g
Maximum value of SAR (measured) = 1.37 mW/g

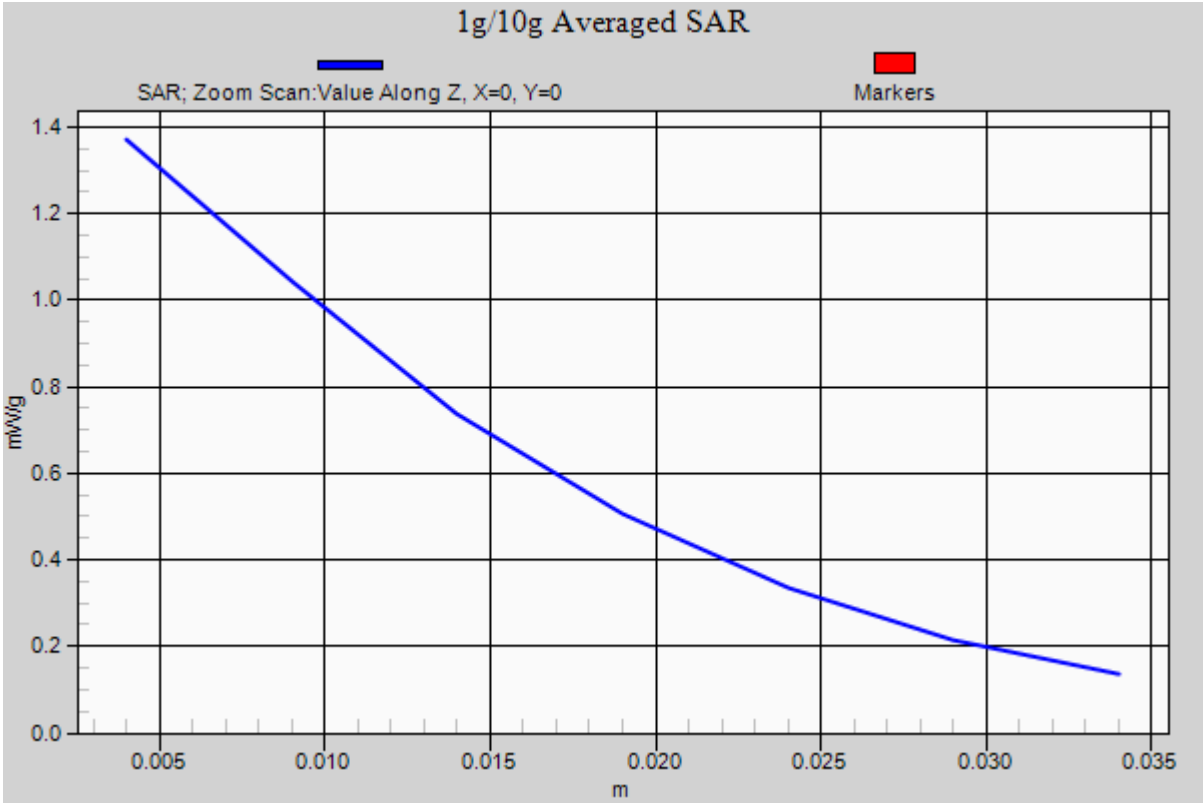
1g/10g Averaged SAR
SAR; Zoom Scan:Value Along Z, X=0, Y=0
Markers
mW/g
1.4
1.2
1.0
0.8
0.6
0.4
0.2
0.0
0.005
0.010
0.015
0.020
0.025
0.030
0.035
m

#17 CDMA2000 BC1_RC3 SO55_Right Cheek_Ch600

DUT: 142502

Communication System: CDMA2000; Frequency: 1880 MHz;Duty Cycle: 1:1
Medium: HSL_1900_110509 Medium parameters used: f = 1880 MHz; σ = 1.39 mho/m; ε_r = 39.7; ρ = 1000 kg/m^3
Ambient Temperature：23.4 ℃; Liquid Temperature：21.4 ℃

DASY5 Configuration:
- Probe: ET3DV6 - SN1788; ConvF(5.03, 5.03, 5.03); Calibrated: 2010-9-21
- Sensor-Surface: 4mm (Mechanical Surface Detection)
- Electronics: DAE4 Sn1210; Calibrated: 2010-11-18
- Phantom: SAM1; Type: SAM; Serial: TP-1479
- Measurement SW: DASY5, V5.2 Build 157; SEMCAD X Version 14.0 Build 57

Ch600/Area Scan (51x91x1): Measurement grid: dx=15mm, dy=15mm
Maximum value of SAR (interpolated) = 1.55 mW/g

Ch600/Zoom Scan (5x5x7)/Cube 0: Measurement grid: dx=8mm, dy=8mm, dz=5mm
Reference Value = 13.9 V/m; Power Drift = 0.101 dB
Peak SAR (extrapolated) = 2.08 W/kg
SAR(1 g) = 1.43 mW/g; SAR(10 g) = 0.923 mW/g
Maximum value of SAR (measured) = 1.54 mW/g

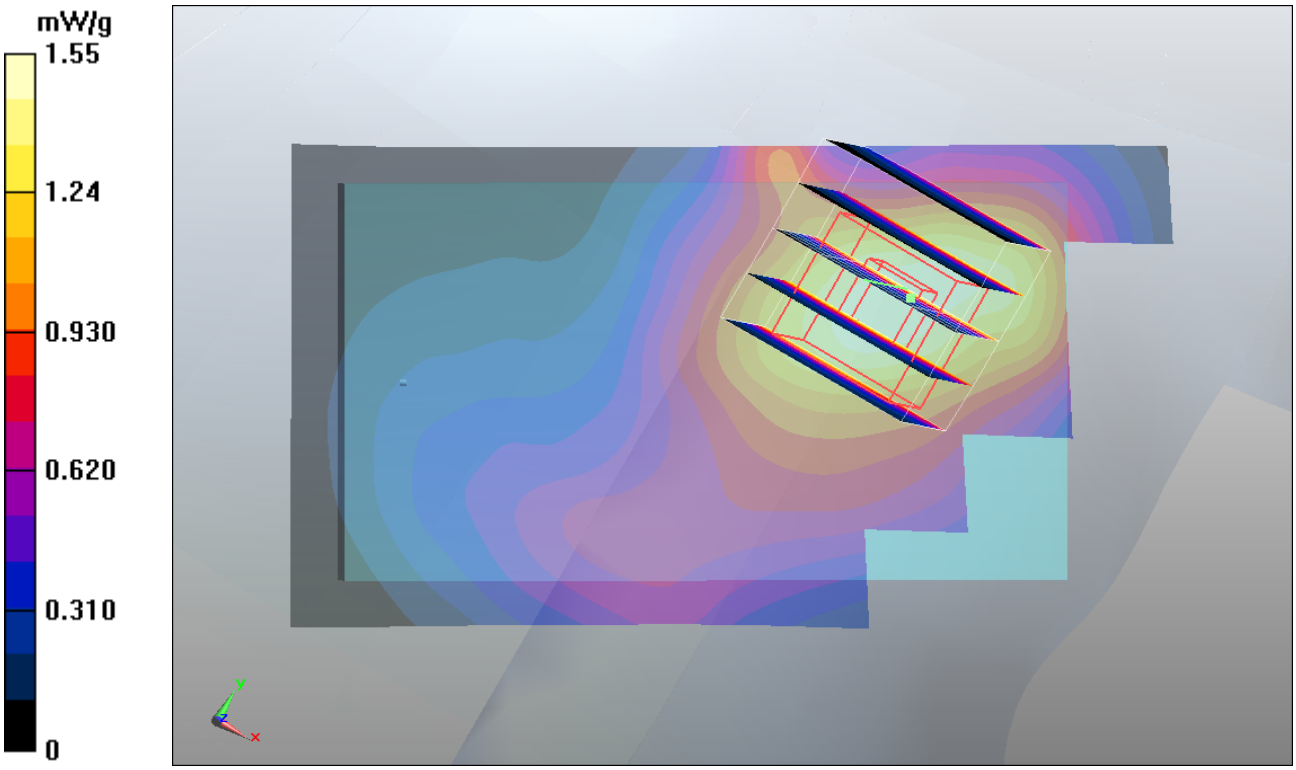
mW/g
1.55
1.24
0.930
0.620
0.310
0
y
z
x

#18 CDMA2000 BC1_RC3 SO55_Left Cheek_Ch25

DUT: 142502

Communication System: CDMA2000; Frequency: 1851.25 MHz;Duty Cycle: 1:1
Medium: HSL_1900_110509 Medium parameters used: f = 1851.25 MHz; σ = 1.36 mho/m; ε_r = 39.8; ρ = 1000 kg/m^3
Ambient Temperature：23.4 ℃; Liquid Temperature：21.4 ℃

DASY5 Configuration:
- Probe: ET3DV6 - SN1788; ConvF(5.03, 5.03, 5.03); Calibrated: 2010-9-21
- Sensor-Surface: 4mm (Mechanical Surface Detection)
- Electronics: DAE4 Sn1210; Calibrated: 2010-11-18
- Phantom: SAM1; Type: SAM; Serial: TP-1479
- Measurement SW: DASY5, V5.2 Build 157; SEMCAD X Version 14.0 Build 57

Ch25/Area Scan (61x91x1): Measurement grid: dx=15mm, dy=15mm
Maximum value of SAR (interpolated) = 1.12 mW/g

Ch25/Zoom Scan (5x5x7)/Cube 0: Measurement grid: dx=8mm, dy=8mm, dz=5mm
Reference Value = 16 V/m; Power Drift = 0.00464 dB
Peak SAR (extrapolated) = 1.31 W/kg
SAR(1 g) = 0.986 mW/g; SAR(10 g) = 0.684 mW/g
Maximum value of SAR (measured) = 1.05 mW/g

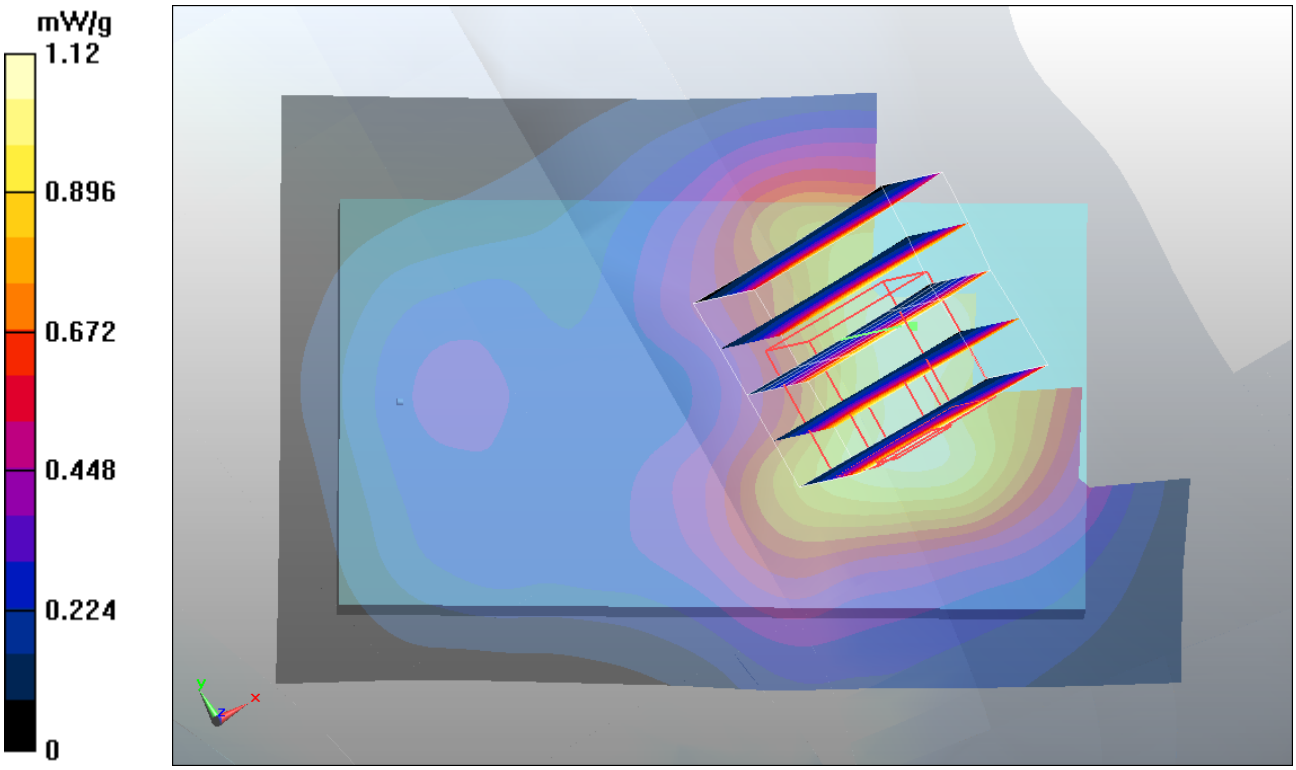
mW/g
1.12
0.896
0.672
0.448
0.224
0

#19 CDMA2000 BC1_RC3 SO55_Left Cheek_Ch600

DUT: 142502

Communication System: CDMA2000; Frequency: 1880 MHz;Duty Cycle: 1:1
Medium: HSL_1900_110509 Medium parameters used: f = 1880 MHz; σ = 1.39 mho/m; ε_r = 39.7; ρ = 1000 kg/m^3
Ambient Temperature：23.4 ℃; Liquid Temperature：21.4 ℃

DASY5 Configuration:
- Probe: ET3DV6 - SN1788; ConvF(5.03, 5.03, 5.03); Calibrated: 2010-9-21
- Sensor-Surface: 4mm (Mechanical Surface Detection)
- Electronics: DAE4 Sn1210; Calibrated: 2010-11-18
- Phantom: SAM1; Type: SAM; Serial: TP-1479
- Measurement SW: DASY5, V5.2 Build 157; SEMCAD X Version 14.0 Build 57

Ch600/Area Scan (61x91x1): Measurement grid: dx=15mm, dy=15mm
Maximum value of SAR (interpolated) = 1.12 mW/g

Ch600/Zoom Scan (5x5x7)/Cube 0: Measurement grid: dx=8mm, dy=8mm, dz=5mm
Reference Value = 15.3 V/m; Power Drift = 0.064 dB
Peak SAR (extrapolated) = 1.32 W/kg
SAR(1 g) = 0.986 mW/g; SAR(10 g) = 0.671 mW/g
Maximum value of SAR (measured) = 1.07 mW/g

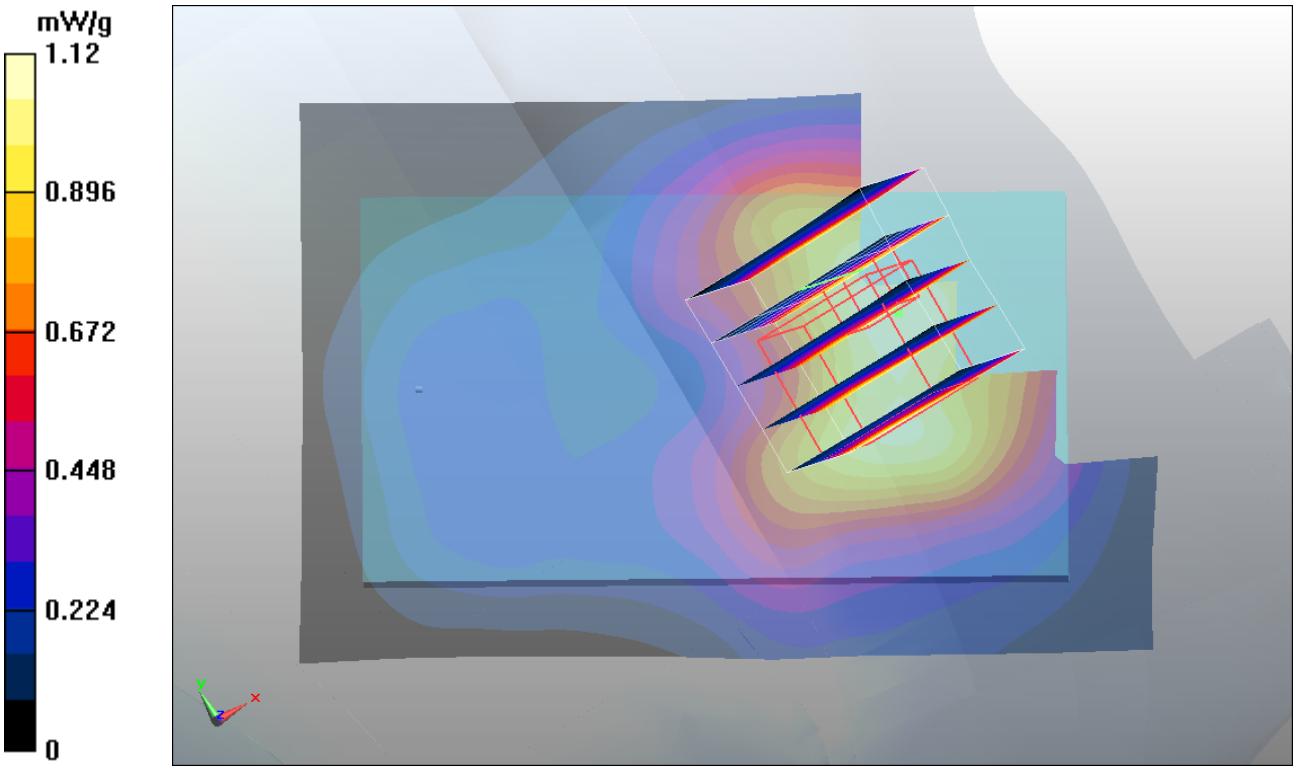
mW/g
1.12
0.896
0.672
0.448
0.224
0
Y
Z
X

#40 CDMA2000 BC0_RC3 SO32_Bottom_1.5cm_Ch1013

DUT: 142502

Communication System: CDMA2000; Frequency: 824.7 MHz;Duty Cycle: 1:1
Medium: MSL_835_110511 Medium parameters used: f = 825 MHz; σ = 0.966 mho/m; ε_r = 54.4; ρ = 1000 kg/m^3
Ambient Temperature：23.4 ℃; Liquid Temperature：21.4 ℃

DASY5 Configuration:
- Probe: ET3DV6 - SN1788; ConvF(5.99, 5.99, 5.99); Calibrated: 2010-9-21
- Sensor-Surface: 4mm (Mechanical Surface Detection)
- Electronics: DAE4 Sn1210; Calibrated: 2010-11-18
- Phantom: SAM3; Type: SAM; Serial: TP-1477
- Measurement SW: DASY5, V5.2 Build 157; SEMCAD X Version 14.0 Build 57

Ch1013/Area Scan (51x91x1): Measurement grid: dx=15mm, dy=15mm
Maximum value of SAR (interpolated) = 0.607 mW/g

Ch1013/Zoom Scan (5x5x7)/Cube 0: Measurement grid: dx=8mm, dy=8mm, dz=5mm
Reference Value = 23.5 V/m; Power Drift = -0.075 dB
Peak SAR (extrapolated) = 0.780 W/kg
SAR(1 g) = 0.573 mW/g; SAR(10 g) = 0.402 mW/g
Maximum value of SAR (measured) = 0.604 mW/g

Ch1013/Zoom Scan (5x5x7)/Cube 1: Measurement grid: dx=8mm, dy=8mm, dz=5mm
Reference Value = 23.5 V/m; Power Drift = -0.075 dB
Peak SAR (extrapolated) = 0.753 W/kg
SAR(1 g) = 0.492 mW/g; SAR(10 g) = 0.326 mW/g
Maximum value of SAR (measured) = 0.537 mW/g

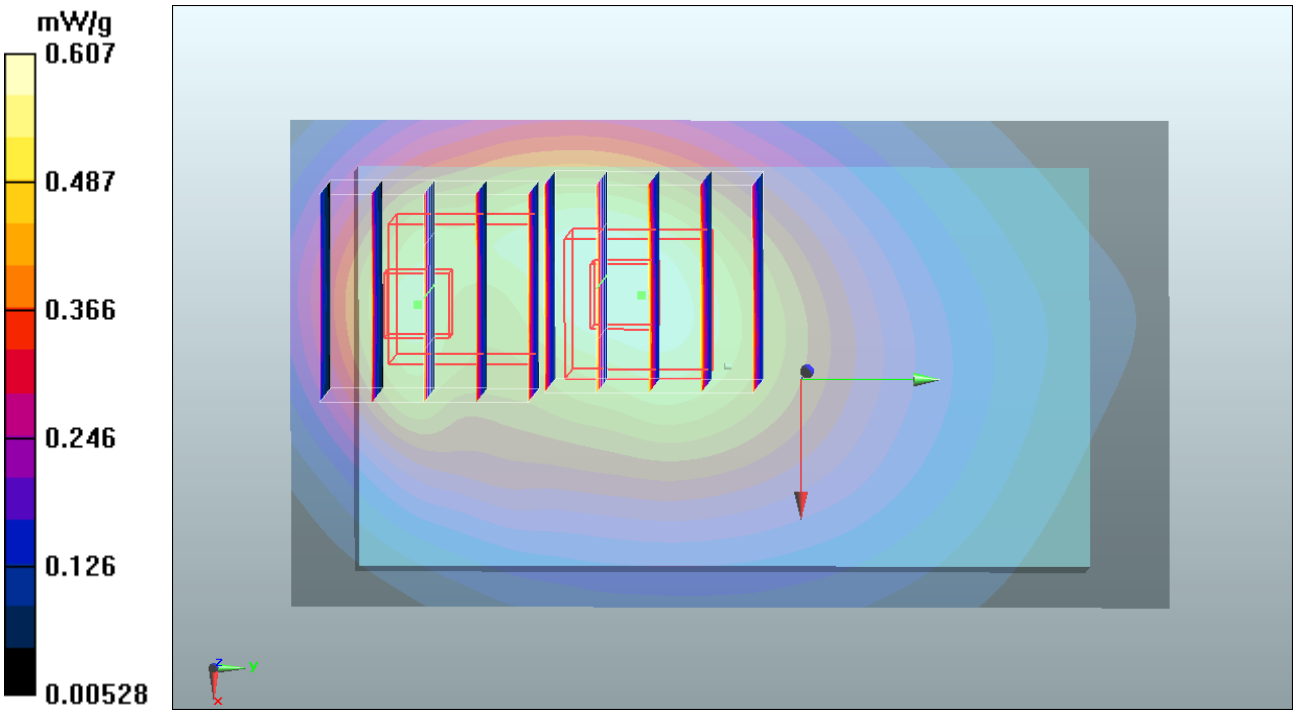
mW/g
0.607
0.487
0.366
0.246
0.126
0.00528

#40 CDMA2000 BC0_RC3 SO32_Bottom_1.5cm_Ch1013_2D

DUT: 142502

Communication System: CDMA2000; Frequency: 824.7 MHz;Duty Cycle: 1:1
Medium: MSL_835_110511 Medium parameters used: f = 825 MHz; σ = 0.966 mho/m; ε_r = 54.4; ρ = 1000 kg/m^3
Ambient Temperature：23.4 ℃; Liquid Temperature：21.4 ℃

DASY5 Configuration:
- Probe: ET3DV6 - SN1788; ConvF(5.99, 5.99, 5.99); Calibrated: 2010-9-21
- Sensor-Surface: 4mm (Mechanical Surface Detection)
- Electronics: DAE4 Sn1210; Calibrated: 2010-11-18
- Phantom: SAM3; Type: SAM; Serial: TP-1477
- Measurement SW: DASY5, V5.2 Build 157; SEMCAD X Version 14.0 Build 57

Ch1013/Area Scan (51x91x1): Measurement grid: dx=15mm, dy=15mm
Maximum value of SAR (interpolated) = 0.607 mW/g

Ch1013/Zoom Scan (5x5x7)/Cube 0: Measurement grid: dx=8mm, dy=8mm, dz=5mm
Reference Value = 23.5 V/m; Power Drift = -0.075 dB
Peak SAR (extrapolated) = 0.780 W/kg
SAR(1 g) = 0.573 mW/g; SAR(10 g) = 0.402 mW/g
Maximum value of SAR (measured) = 0.604 mW/g

Ch1013/Zoom Scan (5x5x7)/Cube 1: Measurement grid: dx=8mm, dy=8mm, dz=5mm
Reference Value = 23.5 V/m; Power Drift = -0.075 dB
Peak SAR (extrapolated) = 0.753 W/kg
SAR(1 g) = 0.492 mW/g; SAR(10 g) = 0.326 mW/g
Maximum value of SAR (measured) = 0.537 mW/g

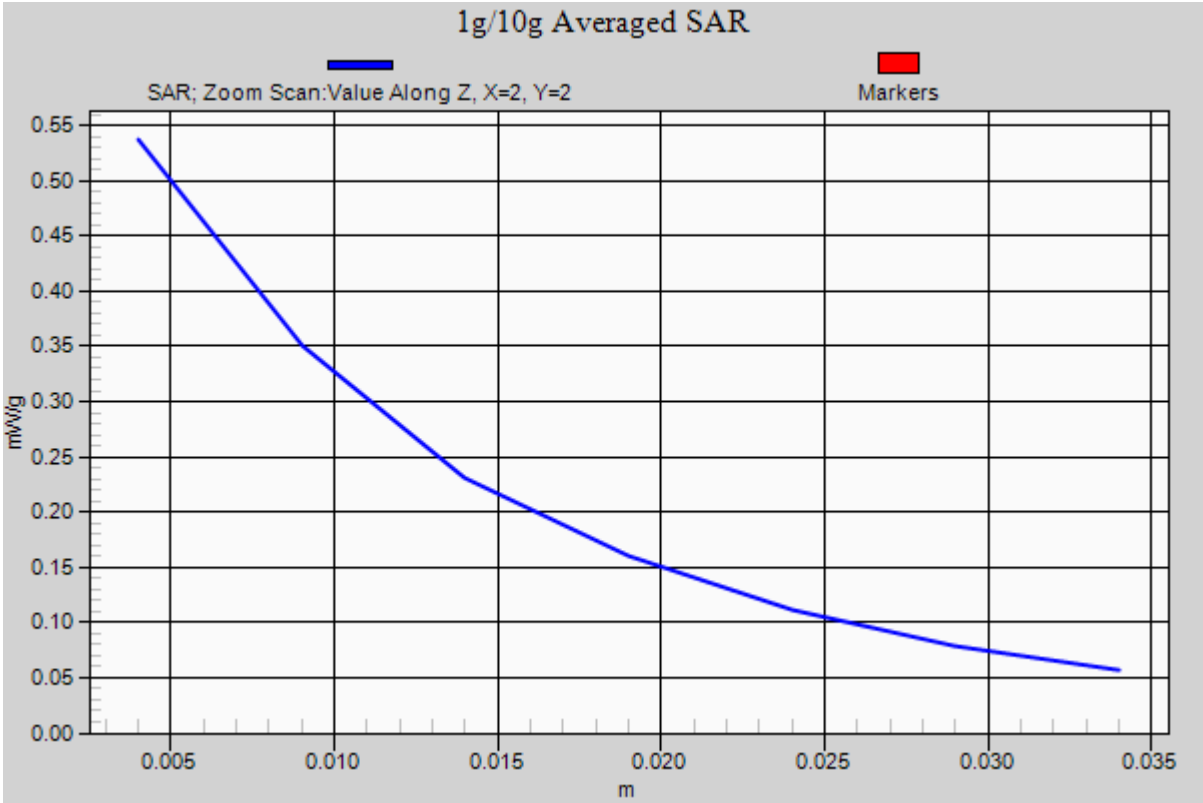
1g/10g Averaged SAR
SAR; Zoom Scan:Value Along Z, X=2, Y=2
Markers
mW/g
0.55
0.50
0.45
0.40
0.35
0.30
0.25
0.20
0.15
0.10
0.05
0.00
0.005
0.010
0.015
0.020
0.025
0.030
0.035
m

#41 CDMA2000 BC0_RC3 SO32_Face_1.5cm_Ch1013

DUT: 142502

Communication System: CDMA2000; Frequency: 824.7 MHz;Duty Cycle: 1:1
Medium: MSL_835_110511 Medium parameters used: f = 825 MHz; σ = 0.966 mho/m; ε_r = 54.4; ρ = 1000 kg/m^3
Ambient Temperature：23.4 ℃; Liquid Temperature：21.4 ℃

DASY5 Configuration:
- Probe: ET3DV6 - SN1788; ConvF(5.99, 5.99, 5.99); Calibrated: 2010-9-21
- Sensor-Surface: 4mm (Mechanical Surface Detection)
- Electronics: DAE4 Sn1210; Calibrated: 2010-11-18
- Phantom: SAM3; Type: SAM; Serial: TP-1477
- Measurement SW: DASY5, V5.2 Build 157; SEMCAD X Version 14.0 Build 57

Ch1013/Area Scan (51x91x1): Measurement grid: dx=15mm, dy=15mm
Maximum value of SAR (interpolated) = 0.430 mW/g

Ch1013/Zoom Scan (5x5x7)/Cube 0: Measurement grid: dx=8mm, dy=8mm, dz=5mm
Reference Value = 18.4 V/m; Power Drift = -0.107 dB
Peak SAR (extrapolated) = 0.527 W/kg
SAR(1 g) = 0.392 mW/g; SAR(10 g) = 0.279 mW/g
Maximum value of SAR (measured) = 0.416 mW/g

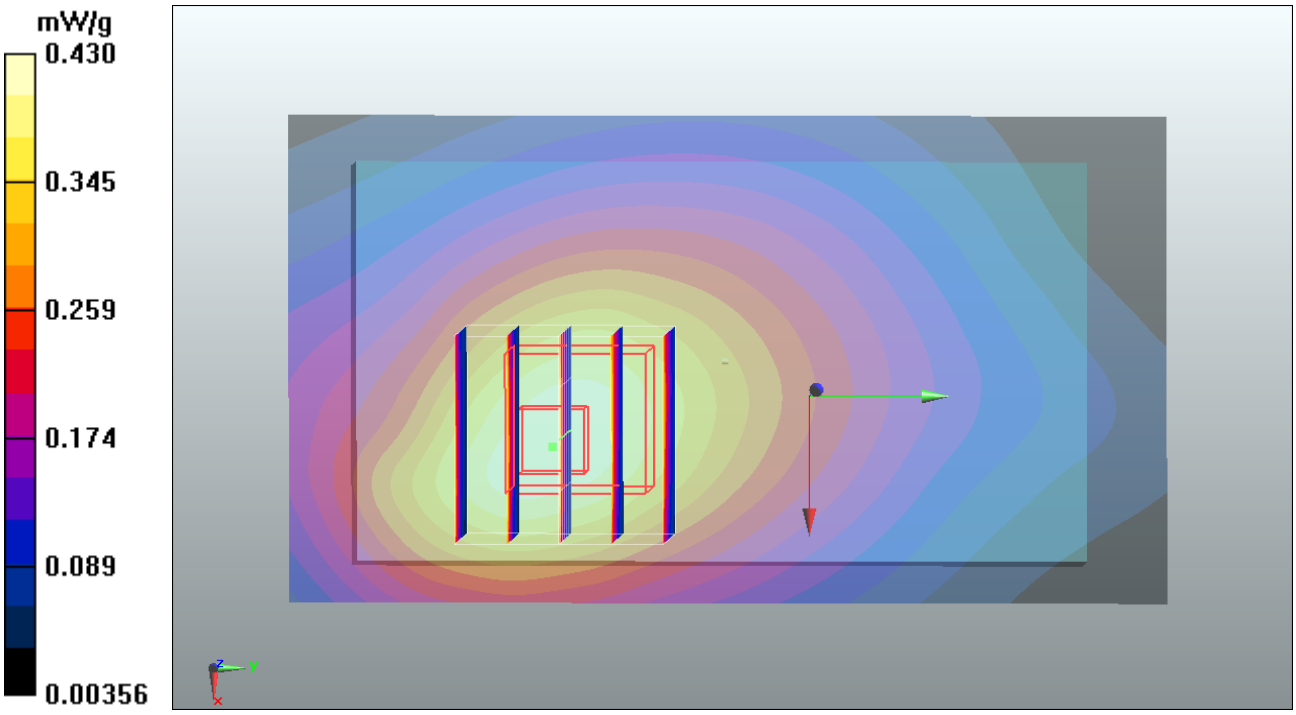
mW/g
0.430
0.345
0.259
0.174
0.089
0.00356

#36 CDMA2000 BC15_RC3 SO32_Bottom_1.5cm_Ch425

DUT: 142502

Communication System: CDMA2000; Frequency: 1731.25 MHz;Duty Cycle: 1:1
Medium: MSL_1800_110511 Medium parameters used: f = 1731.25 MHz; σ = 1.48 mho/m; ε_r = 51.1; ρ = 1000 kg/m^3
Ambient Temperature：23.3 ℃; Liquid Temperature：21.4 ℃

DASY5 Configuration:
- Probe: ET3DV6 - SN1788; ConvF(4.67, 4.67, 4.67); Calibrated: 2010-9-21
- Sensor-Surface: 4mm (Mechanical Surface Detection)
- Electronics: DAE4 Sn1210; Calibrated: 2010-11-18
- Phantom: SAM1; Type: SAM; Serial: TP-1479
- Measurement SW: DASY5, V5.2 Build 157; SEMCAD X Version 14.0 Build 57

Ch425/Area Scan (51x91x1): Measurement grid: dx=15mm, dy=15mm
Maximum value of SAR (interpolated) = 0.988 mW/g

Ch425/Zoom Scan (5x5x7)/Cube 0: Measurement grid: dx=8mm, dy=8mm, dz=5mm
Reference Value = 13.8 V/m; Power Drift = -0.106 dB
Peak SAR (extrapolated) = 1.2 W/kg
SAR(1 g) = 0.885 mW/g; SAR(10 g) = 0.569 mW/g
Maximum value of SAR (measured) = 0.967 mW/g

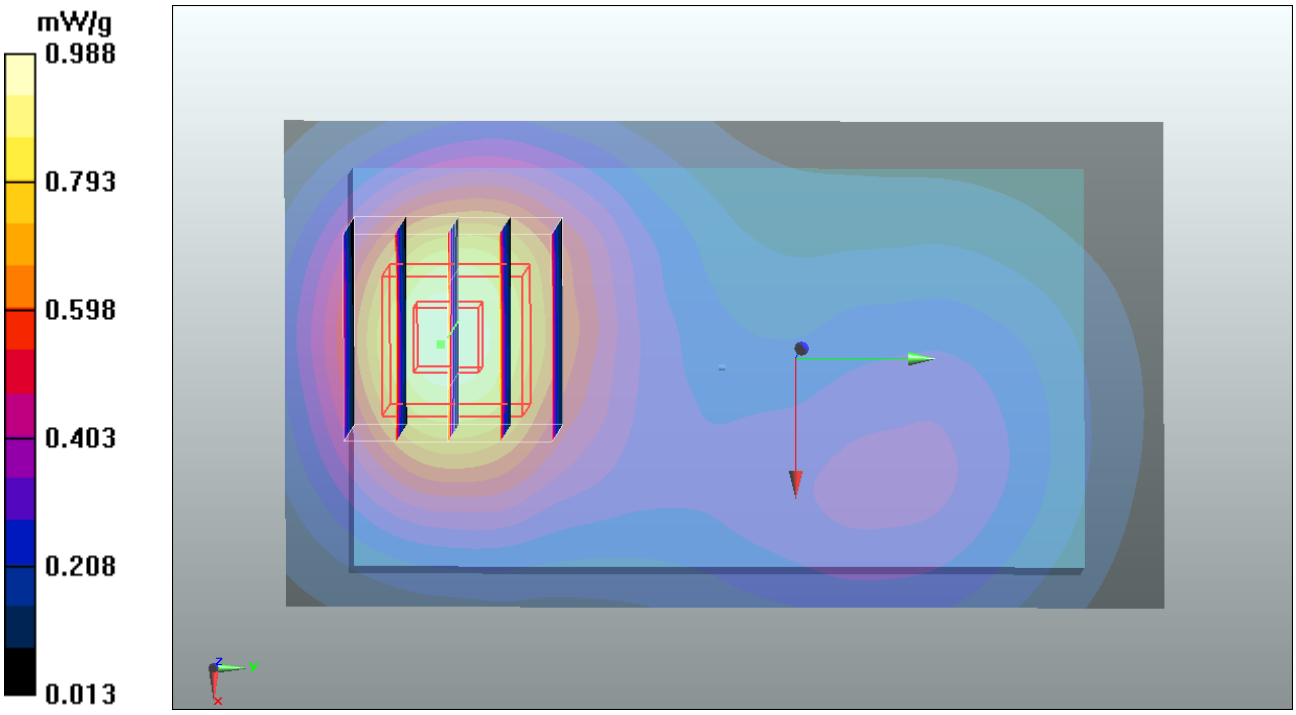
mW/g
0.988
0.793
0.598
0.403
0.208
0.013

#36 CDMA2000 BC15_RC3 SO32_Bottom_1.5cm_Ch425_2D

DUT: 142502

Communication System: CDMA2000; Frequency: 1731.25 MHz;Duty Cycle: 1:1
Medium: MSL_1800_110511 Medium parameters used: f = 1731.25 MHz; σ = 1.48 mho/m; ε_r = 51.1; ρ = 1000 kg/m^3
Ambient Temperature：23.3 ℃; Liquid Temperature：21.4 ℃

DASY5 Configuration:
- Probe: ET3DV6 - SN1788; ConvF(4.67, 4.67, 4.67); Calibrated: 2010-9-21
- Sensor-Surface: 4mm (Mechanical Surface Detection)
- Electronics: DAE4 Sn1210; Calibrated: 2010-11-18
- Phantom: SAM1; Type: SAM; Serial: TP-1479
- Measurement SW: DASY5, V5.2 Build 157; SEMCAD X Version 14.0 Build 57

Ch425/Area Scan (51x91x1): Measurement grid: dx=15mm, dy=15mm
Maximum value of SAR (interpolated) = 0.988 mW/g

Ch425/Zoom Scan (5x5x7)/Cube 0: Measurement grid: dx=8mm, dy=8mm, dz=5mm
Reference Value = 13.8 V/m; Power Drift = -0.106 dB
Peak SAR (extrapolated) = 1.2 W/kg
SAR(1 g) = 0.885 mW/g; SAR(10 g) = 0.569 mW/g
Maximum value of SAR (measured) = 0.967 mW/g

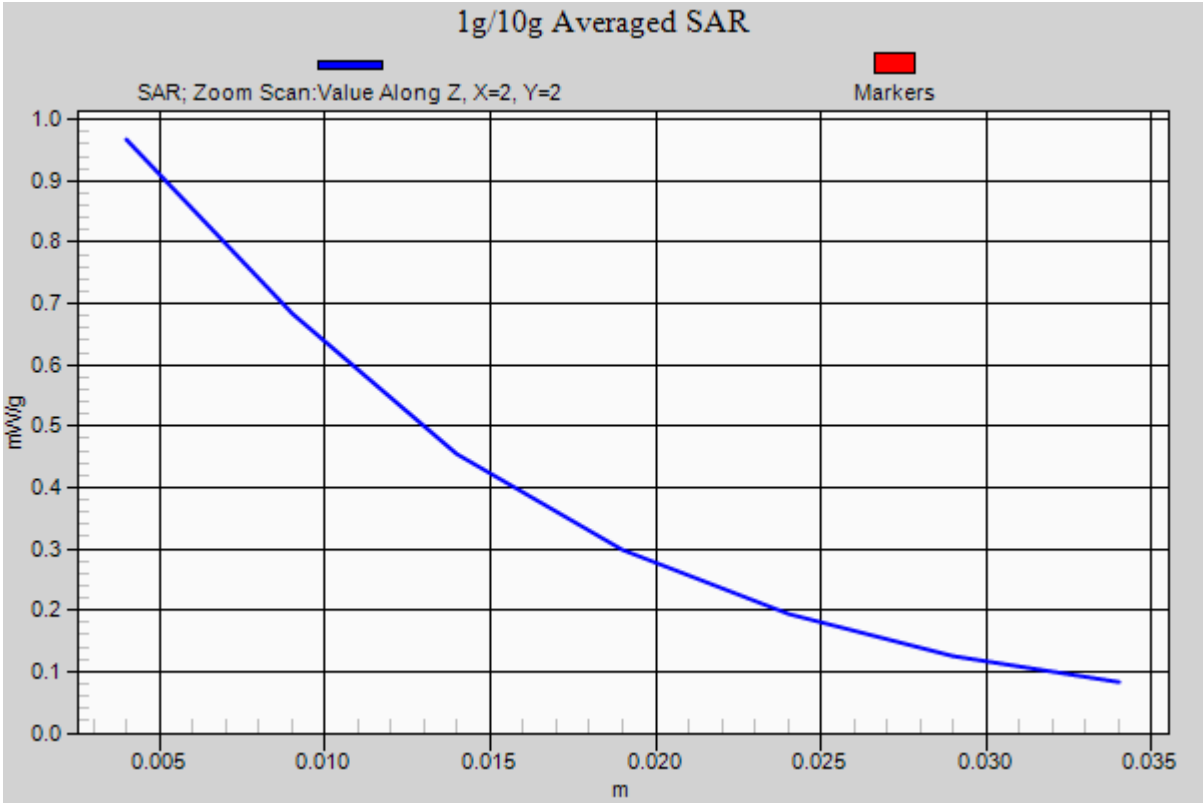
1g/10g Averaged SAR
SAR; Zoom Scan:Value Along Z, X=2, Y=2
Markers
mW/g
1.0
0.9
0.8
0.7
0.6
0.5
0.4
0.3
0.2
0.1
0.0
0.005
0.010
0.015
0.020
0.025
0.030
0.035
m

#37 CDMA2000 BC15_RC3 SO32_Face_1.5cm_Ch425

DUT: 142502

Communication System: CDMA2000; Frequency: 1731.25 MHz;Duty Cycle: 1:1
Medium: MSL_1800_110511 Medium parameters used: f = 1731.25 MHz; σ = 1.48 mho/m; ε_r = 51.1; ρ = 1000 kg/m^3
Ambient Temperature：23.3 ℃; Liquid Temperature：21.4 ℃

DASY5 Configuration:
- Probe: ET3DV6 - SN1788; ConvF(4.67, 4.67, 4.67); Calibrated: 2010-9-21
- Sensor-Surface: 4mm (Mechanical Surface Detection)
- Electronics: DAE4 Sn1210; Calibrated: 2010-11-18
- Phantom: SAM1; Type: SAM; Serial: TP-1479
- Measurement SW: DASY5, V5.2 Build 157; SEMCAD X Version 14.0 Build 57

Ch425/Area Scan (51x91x1): Measurement grid: dx=15mm, dy=15mm
Maximum value of SAR (interpolated) = 0.682 mW/g

Ch425/Zoom Scan (5x5x7)/Cube 0: Measurement grid: dx=8mm, dy=8mm, dz=5mm
Reference Value = 14.9 V/m; Power Drift = -0.118 dB
Peak SAR (extrapolated) = 0.780 W/kg
SAR(1 g) = 0.593 mW/g; SAR(10 g) = 0.395 mW/g
Maximum value of SAR (measured) = 0.637 mW/g

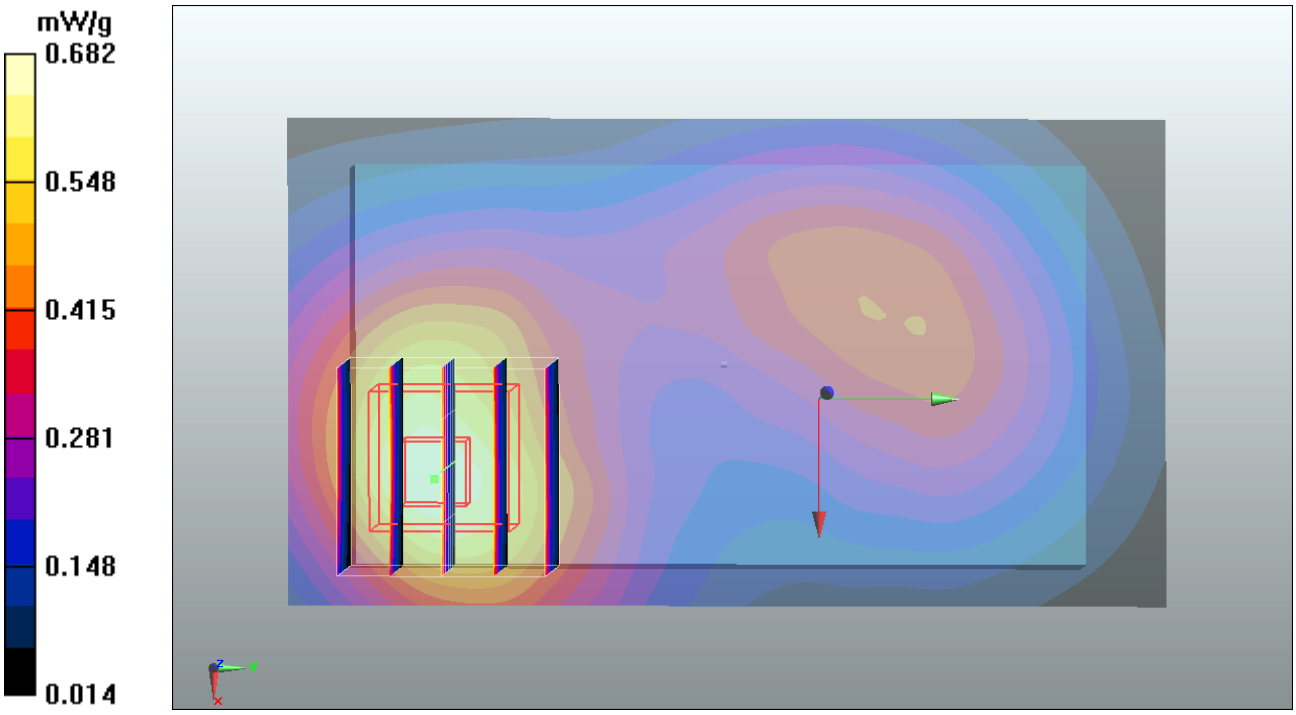
mW/g
0.682
0.548
0.415
0.281
0.148
0.014

#38 CDMA2000 BC15_RC3 SO32_Bottom_1.5cm_Ch25

DUT: 142502

Communication System: CDMA2000; Frequency: 1711.25 MHz;Duty Cycle: 1:1
Medium: MSL_1800_110511 Medium parameters used: f = 1711.25 MHz; σ = 1.46 mho/m; ε_r = 51.1; ρ = 1000 kg/m^3
Ambient Temperature：23.3 ℃; Liquid Temperature：21.4 ℃

DASY5 Configuration:
- Probe: ET3DV6 - SN1788; ConvF(4.67, 4.67, 4.67); Calibrated: 2010-9-21
- Sensor-Surface: 4mm (Mechanical Surface Detection)
- Electronics: DAE4 Sn1210; Calibrated: 2010-11-18
- Phantom: SAM1; Type: SAM; Serial: TP-1479
- Measurement SW: DASY5, V5.2 Build 157; SEMCAD X Version 14.0 Build 57

Ch25/Area Scan (51x91x1): Measurement grid: dx=15mm, dy=15mm
Maximum value of SAR (interpolated) = 0.969 mW/g

Ch25/Zoom Scan (5x5x7)/Cube 0: Measurement grid: dx=8mm, dy=8mm, dz=5mm
Reference Value = 14.6 V/m; Power Drift = -0.042 dB
Peak SAR (extrapolated) = 1.16 W/kg
SAR(1 g) = 0.876 mW/g; SAR(10 g) = 0.568 mW/g
Maximum value of SAR (measured) = 0.954 mW/g

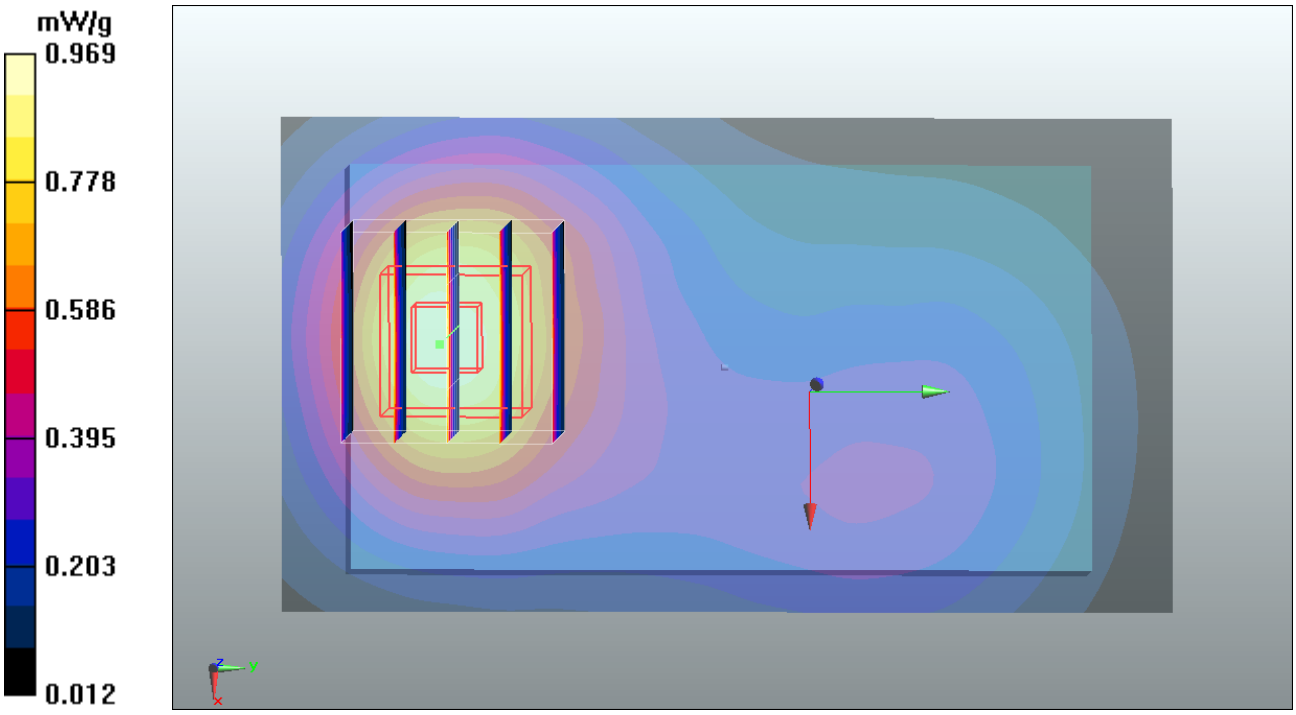
mW/g
0.969
0.778
0.586
0.395
0.203
0.012

#39 CDMA2000 BC15_RC3 SO32_Bottom_1.5cm_Ch875

DUT: 142502

Communication System: CDMA2000; Frequency: 1753.75 MHz;Duty Cycle: 1:1
Medium: MSL_1800_110511 Medium parameters used: f = 1754 MHz; σ = 1.51 mho/m; ε_r = 51; ρ = 1000 kg/m^3
Ambient Temperature：23.3 ℃; Liquid Temperature：21.4 ℃

DASY5 Configuration:
- Probe: ET3DV6 - SN1788; ConvF(4.67, 4.67, 4.67); Calibrated: 2010-9-21
- Sensor-Surface: 4mm (Mechanical Surface Detection)
- Electronics: DAE4 Sn1210; Calibrated: 2010-11-18
- Phantom: SAM1; Type: SAM; Serial: TP-1479
- Measurement SW: DASY5, V5.2 Build 157; SEMCAD X Version 14.0 Build 57

Ch875/Area Scan (51x91x1): Measurement grid: dx=15mm, dy=15mm
Maximum value of SAR (interpolated) = 0.923 mW/g

Ch875/Zoom Scan (5x5x7)/Cube 0: Measurement grid: dx=8mm, dy=8mm, dz=5mm
Reference Value = 12.2 V/m; Power Drift = -0.040 dB
Peak SAR (extrapolated) = 1.2 W/kg
SAR(1 g) = 0.852 mW/g; SAR(10 g) = 0.540 mW/g
Maximum value of SAR (measured) = 0.926 mW/g

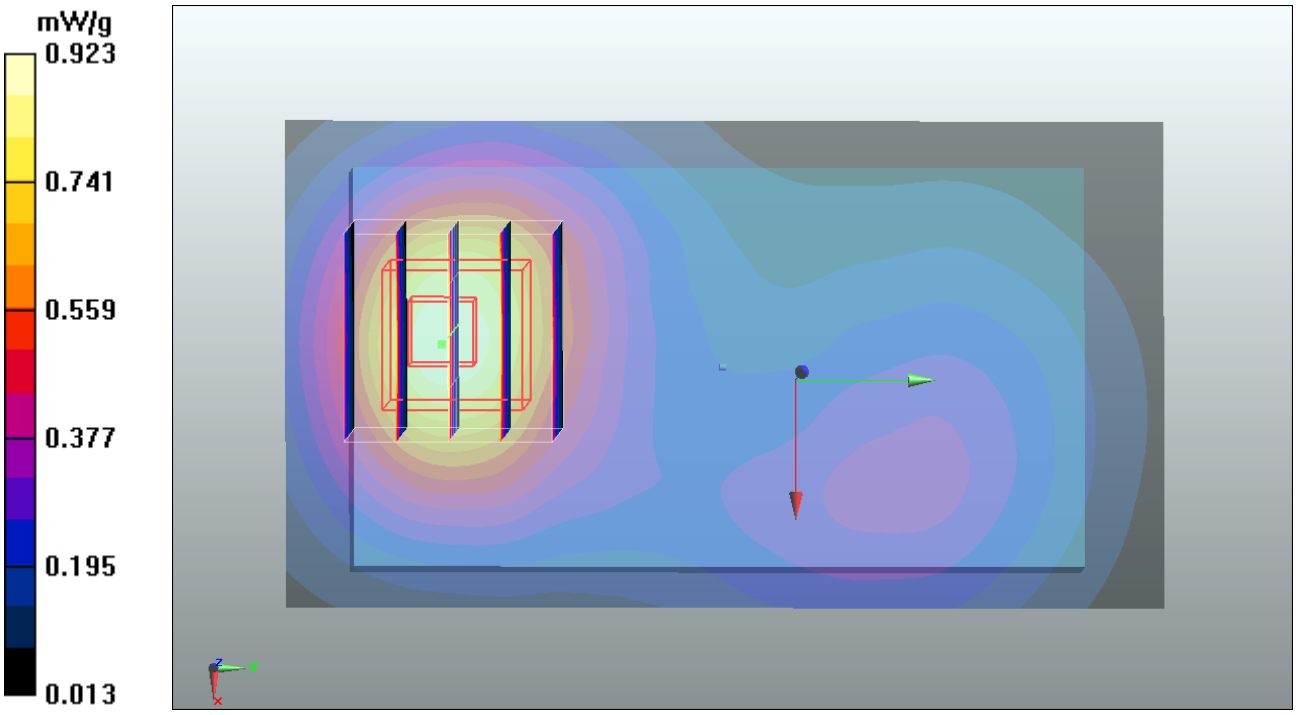
mW/g
0.923
0.741
0.559
0.377
0.195
0.013

#32 CDMA2000 BC1_RC3 SO32_Bottom_1.5cm_Ch1175

DUT: 142502

Communication System: CDMA2000; Frequency: 1908.75 MHz;Duty Cycle: 1:1
Medium: MSL_1900_110511 Medium parameters used: f = 1909 MHz; σ = 1.54 mho/m; ε_r = 52.4; ρ = 1000 kg/m^3
Ambient Temperature：23.2 ℃; Liquid Temperature：21.4 ℃

DASY5 Configuration:
- Probe: ET3DV6 - SN1788; ConvF(4.39, 4.39, 4.39); Calibrated: 2010-9-21
- Sensor-Surface: 4mm (Mechanical Surface Detection)
- Electronics: DAE4 Sn1210; Calibrated: 2010-11-18
- Phantom: SAM3; Type: SAM; Serial: TP-1477
- Measurement SW: DASY5, V5.2 Build 157; SEMCAD X Version 14.0 Build 57

Ch1175/Area Scan (51x91x1): Measurement grid: dx=15mm, dy=15mm
Maximum value of SAR (interpolated) = 1.16 mW/g

Ch1175/Zoom Scan (5x5x7)/Cube 0: Measurement grid: dx=8mm, dy=8mm, dz=5mm
Reference Value = 16.3 V/m; Power Drift = -0.118 dB
Peak SAR (extrapolated) = 1.44 W/kg
SAR(1 g) = 1.02 mW/g; SAR(10 g) = 0.640 mW/g
Maximum value of SAR (measured) = 1.1 mW/g

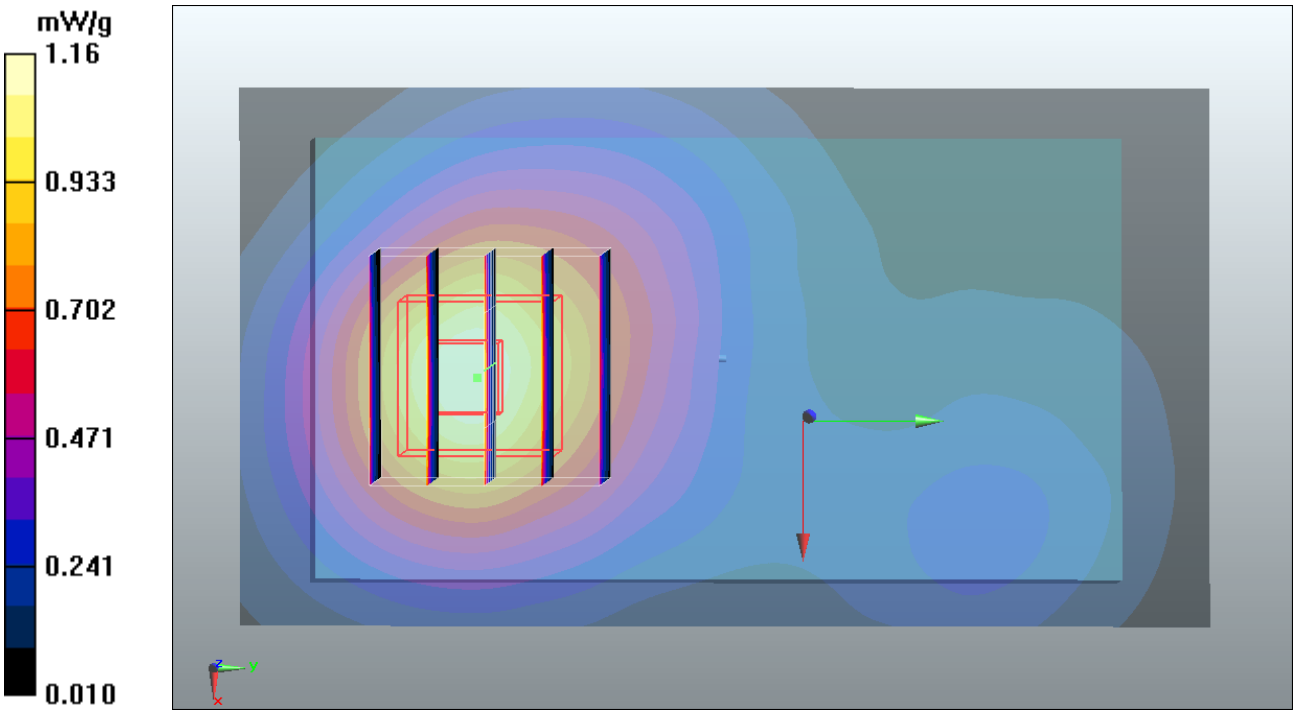
mW/g
1.16
0.933
0.702
0.471
0.241
0.010

#33 CDMA2000 BC1_RC3 SO32_Face_1.5cm_Ch1175

DUT: 142502

Communication System: CDMA2000; Frequency: 1908.75 MHz;Duty Cycle: 1:1
Medium: MSL_1900_110511 Medium parameters used: f = 1909 MHz; σ = 1.54 mho/m; ε_r = 52.4; ρ = 1000 kg/m^3
Ambient Temperature：23.2 ℃; Liquid Temperature：21.4 ℃

DASY5 Configuration:
- Probe: ET3DV6 - SN1788; ConvF(4.39, 4.39, 4.39); Calibrated: 2010-9-21
- Sensor-Surface: 4mm (Mechanical Surface Detection)
- Electronics: DAE4 Sn1210; Calibrated: 2010-11-18
- Phantom: SAM3; Type: SAM; Serial: TP-1477
- Measurement SW: DASY5, V5.2 Build 157; SEMCAD X Version 14.0 Build 57

Ch1175/Area Scan (51x91x1): Measurement grid: dx=15mm, dy=15mm
Maximum value of SAR (interpolated) = 0.853 mW/g

Ch1175/Zoom Scan (5x5x7)/Cube 0: Measurement grid: dx=8mm, dy=8mm, dz=5mm
Reference Value = 11.9 V/m; Power Drift = -0.070 dB
Peak SAR (extrapolated) = 1.03 W/kg
SAR(1 g) = 0.758 mW/g; SAR(10 g) = 0.500 mW/g
Maximum value of SAR (measured) = 0.809 mW/g

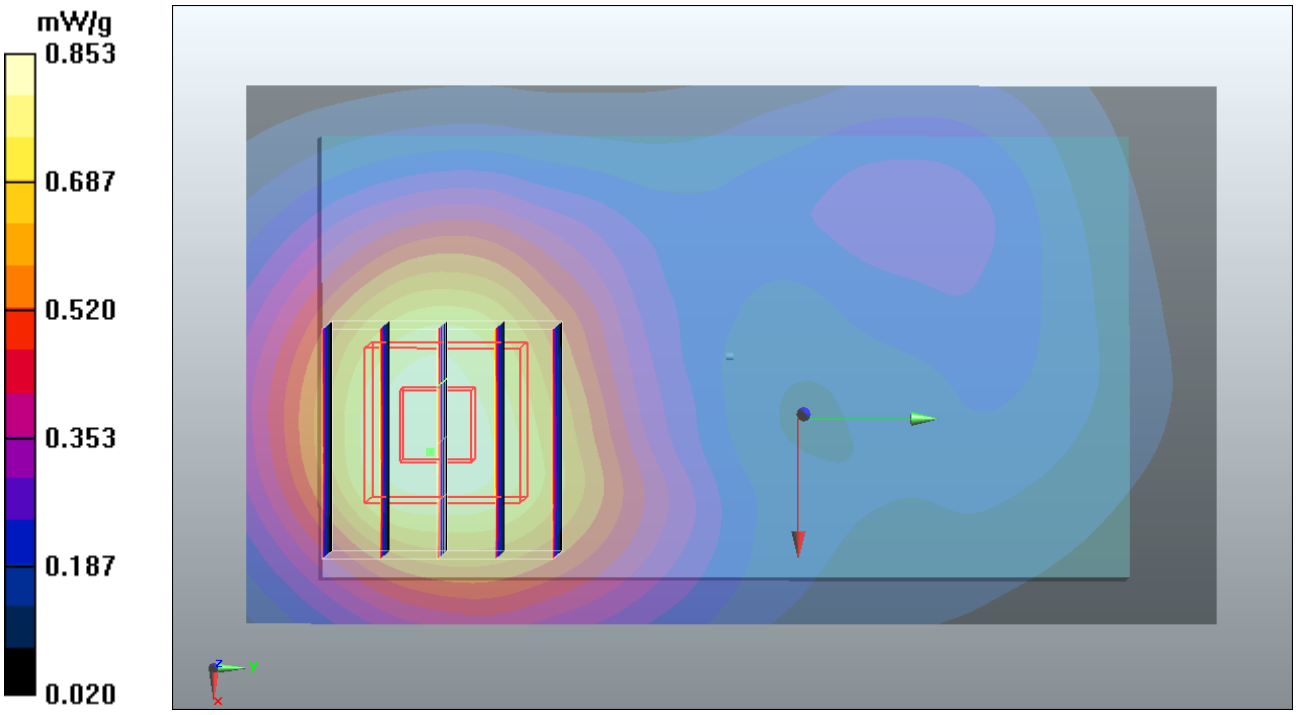
mW/g
0.853
0.687
0.520
0.353
0.187
0.020

#34 CDMA2000 BC1_RC3 SO32_Bottom_1.5cm_Ch25

DUT: 142502

Communication System: CDMA2000; Frequency: 1851.25 MHz;Duty Cycle: 1:1
Medium: MSL_1900_110511 Medium parameters used: f = 1851.25 MHz; σ = 1.48 mho/m; ε_r = 52.6; ρ = 1000 kg/m^3
Ambient Temperature：23.2 ℃; Liquid Temperature：21.4 ℃

DASY5 Configuration:
- Probe: ET3DV6 - SN1788; ConvF(4.39, 4.39, 4.39); Calibrated: 2010-9-21
- Sensor-Surface: 4mm (Mechanical Surface Detection)
- Electronics: DAE4 Sn1210; Calibrated: 2010-11-18
- Phantom: SAM3; Type: SAM; Serial: TP-1477
- Measurement SW: DASY5, V5.2 Build 157; SEMCAD X Version 14.0 Build 57

Ch25/Area Scan (51x91x1): Measurement grid: dx=15mm, dy=15mm
Maximum value of SAR (interpolated) = 1.23 mW/g

Ch25/Zoom Scan (5x5x7)/Cube 0: Measurement grid: dx=8mm, dy=8mm, dz=5mm
Reference Value = 13.2 V/m; Power Drift = -0.060 dB
Peak SAR (extrapolated) = 1.5 W/kg
SAR(1 g) = 1.09 mW/g; SAR(10 g) = 0.681 mW/g
Maximum value of SAR (measured) = 1.19 mW/g

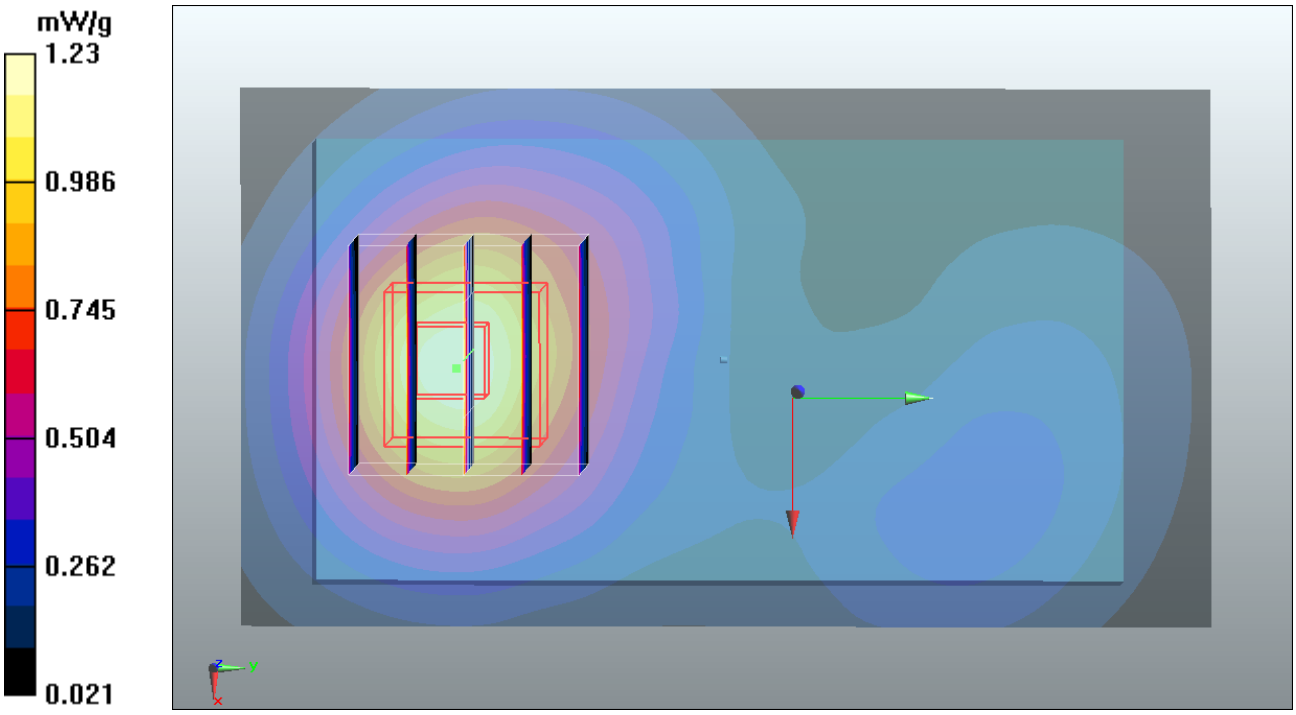
mW/g
1.23
0.986
0.745
0.504
0.262
0.021

#34 CDMA2000 BC1_RC3 SO32_Bottom_1.5cm_Ch25_2D

DUT: 142502

Communication System: CDMA2000; Frequency: 1851.25 MHz;Duty Cycle: 1:1
Medium: MSL_1900_110511 Medium parameters used: f = 1851.25 MHz; σ = 1.48 mho/m; ε_r = 52.6; ρ = 1000 kg/m^3
Ambient Temperature：23.2 ℃; Liquid Temperature：21.4 ℃

DASY5 Configuration:
- Probe: ET3DV6 - SN1788; ConvF(4.39, 4.39, 4.39); Calibrated: 2010-9-21
- Sensor-Surface: 4mm (Mechanical Surface Detection)
- Electronics: DAE4 Sn1210; Calibrated: 2010-11-18
- Phantom: SAM3; Type: SAM; Serial: TP-1477
- Measurement SW: DASY5, V5.2 Build 157; SEMCAD X Version 14.0 Build 57

Ch25/Area Scan (51x91x1): Measurement grid: dx=15mm, dy=15mm
Maximum value of SAR (interpolated) = 1.23 mW/g

Ch25/Zoom Scan (5x5x7)/Cube 0: Measurement grid: dx=8mm, dy=8mm, dz=5mm
Reference Value = 13.2 V/m; Power Drift = -0.060 dB
Peak SAR (extrapolated) = 1.5 W/kg
SAR(1 g) = 1.09 mW/g; SAR(10 g) = 0.681 mW/g
Maximum value of SAR (measured) = 1.19 mW/g

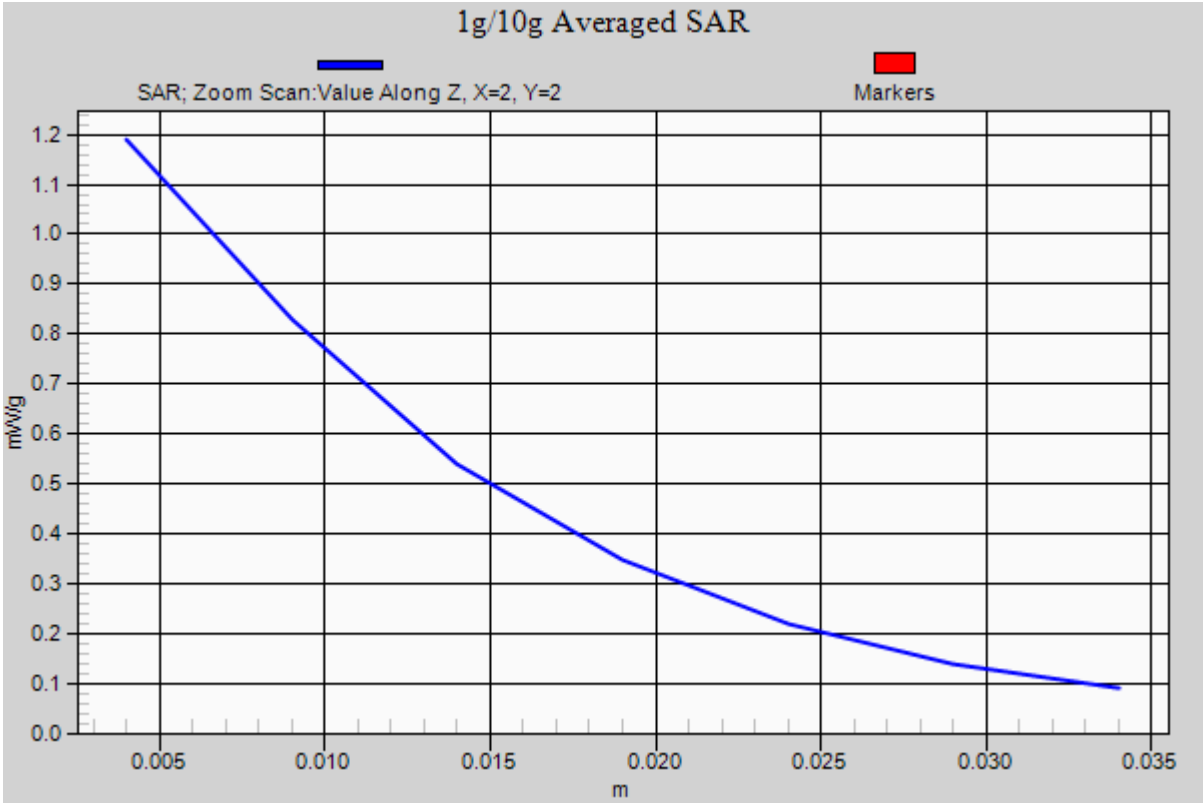
1g/10g Averaged SAR
SAR; Zoom Scan:Value Along Z, X=2, Y=2
Markers
mW/g
1.2
1.1
1.0
0.9
0.8
0.7
0.6
0.5
0.4
0.3
0.2
0.1
0.0
0.005
0.010
0.015
0.020
0.025
0.030
0.035
m

#35 CDMA2000 BC1_RC3 SO32_Bottom_1.5cm_Ch600

DUT: 142502

Communication System: CDMA2000; Frequency: 1880 MHz;Duty Cycle: 1:1
Medium: MSL_1900_110511 Medium parameters used: f = 1880 MHz; σ = 1.51 mho/m; ε_r = 52.5; ρ = 1000 kg/m^3
Ambient Temperature：23.2 ℃; Liquid Temperature：21.4 ℃

DASY5 Configuration:
- Probe: ET3DV6 - SN1788; ConvF(4.39, 4.39, 4.39); Calibrated: 2010-9-21
- Sensor-Surface: 4mm (Mechanical Surface Detection)
- Electronics: DAE4 Sn1210; Calibrated: 2010-11-18
- Phantom: SAM3; Type: SAM; Serial: TP-1477
- Measurement SW: DASY5, V5.2 Build 157; SEMCAD X Version 14.0 Build 57

Ch600/Area Scan (51x91x1): Measurement grid: dx=15mm, dy=15mm
Maximum value of SAR (interpolated) = 1.21 mW/g

Ch600/Zoom Scan (5x5x7)/Cube 0: Measurement grid: dx=8mm, dy=8mm, dz=5mm
Reference Value = 13.5 V/m; Power Drift = -0.043 dB
Peak SAR (extrapolated) = 1.53 W/kg
SAR(1 g) = 1.09 mW/g; SAR(10 g) = 0.680 mW/g
Maximum value of SAR (measured) = 1.18 mW/g

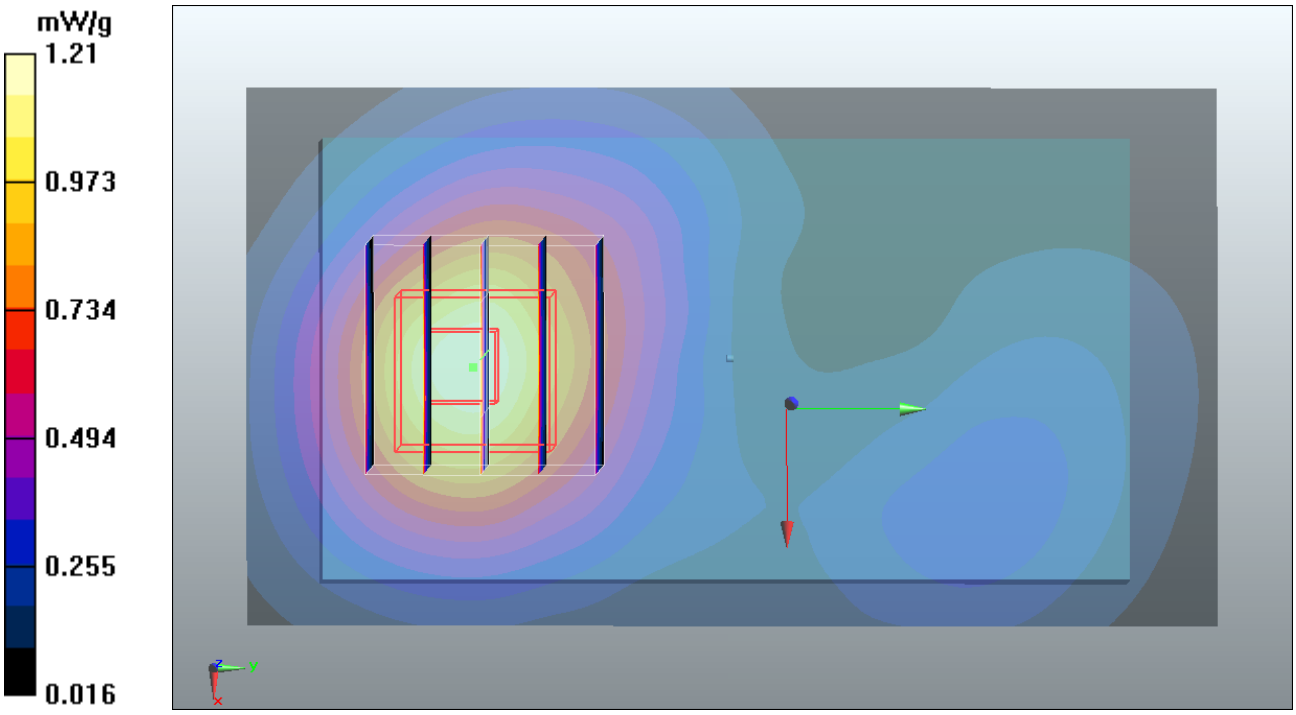
mW/g
1.21
0.973
0.734
0.494
0.255
0.016