FCC SAR Test Report

APPLICANT	:	**ZTE CORPORATION**
EQUIPMENT	:	**Dual-Band**
BRAND NAME	:	**ZTE**
MODEL NAME	:	**X500**
FCC ID	:	**Q78-X500**
STANDARD	:	**FCC 47 CFR Part 2 (2.1093)** **IEEE C95.1-1991** **IEEE 1528-2003** **FCC OET Bulletin 65 Supplement C (Edition 01-01)**

The product was received on Apr. 26, 2011 and completely tested on May 11, 2011. We, SPORTON INTERNATIONAL INC., would like to declare that the tested sample has been evaluated in accordance with the procedures and shown the compliance with the applicable technical standards.

The test results in this report apply exclusively to the tested model / sample. Without written approval of SPORTON INTERNATIONAL (KUNSHAN) INC., the test report shall not be reproduced except in full.

Reviewed by:

Jones Tsai

Jones Tsai / Manager

Testing Laboratory
1190

SPORTON INTERNATIONAL (KUNSHAN) INC.
No. 3-2, PingXiang Road, Kunshan, Jiangsu Province, P.R.C.

Table of Contents

Revision History **3**
1. Statement of Compliance **4**
2. Administration Data **5**
2.1 Testing Laboratory 5
2.2 Applicant 5
2.3 Manufacturer 5
2.4 Application Details 5
3. General Information **6**
3.1 Description of Device Under Test (DUT) 6
3.2 Product Photos 6
3.3 Applied Standards 6
3.4 Device Category and SAR Limits 6
3.5 Test Conditions 7
3.5.1 Ambient Condition 7
3.5.2 Test Configuration 7
4. Specific Absorption Rate (SAR) **8**
4.1 Introduction 8
4.2 SAR Definition 8
5. SAR Measurement System **9**
5.1 E-Field Probe 10
5.1.1 E-Field Probe Specification 10
5.1.2 E-Field Probe Calibration 11
5.2 Data Acquisition Electronics (DAE) 11
5.3 Robot 11
5.4 Measurement Server 12
5.5 Phantom 13
5.6 Device Holder 14
5.7 Data Storage and Evaluation 15
5.7.1 Data Storage 15
5.7.2 Data Evaluation 15
5.8 Test Equipment List 17
6. Tissue Simulating Liquids **18**
7. Uncertainty Assessment **20**
8. SAR Measurement Evaluation **22**
8.1 Purpose of System Performance check 22
8.2 System Setup 22
8.3 Validation Results 23
9. DUT Testing Position **24**
10. Measurement Procedures **27**
10.1 Spatial Peak SAR Evaluation 27
10.2 Area & Zoom Scan Procedures 28
10.3 Volume Scan Procedures 28
10.4 SAR Averaged Methods 28
10.5 Power Drift Monitoring 28
11. SAR Test Results **29**
11.1 Conducted Power (Unit: dBm) 29
11.2 Test Records for Head SAR Test 30
11.3 Test Records for Body SAR Test 30
12. References **31**

Appendix A. Plots of System Performance Check
Appendix B. Plots of SAR Measurement
Appendix C. DASY Calibration Certificate
Appendix D. Product Photos
Appendix E. Test Setup Photos
Appendix F. FCC 3G SAR Measurement Procedures

Revision History

REPORT NO.	VERSION	DESCRIPTION	ISSUED DATE
FA142634A	Rev. 01	Initial issue of report	Jun. 27, 2011

1. Statement of Compliance

The maximum results of Specific Absorption Rate (SAR) found during testing for **ZTE CORPORATION Dual-Band ZTE X500** are as follows (with expanded uncertainty 21.4 % for 300 MHz to 3 GHz).

Band	Position	SAR_{1g} (W/kg)
CDMA2000 BC0	Head	0.722
	Body (1.5cm Gap)	0.573
CDMA2000 BC15	Head	1.41
	Body (1.5cm Gap)	0.885
CDMA2000 BC1	Head	1.45
	Body (1.5cm Gap)	1.09

This device is in compliance with Specific Absorption Rate (SAR) for general population/uncontrolled exposure limits (1.6 W/kg) specified in FCC 47 CFR part 2 (2.1093) and ANSI/IEEE C95.1-1991, and had been tested in accordance with the measurement methods and procedures specified in IEEE 1528-2003 and FCC OET Bulletin 65 Supplement C (Edition 01-01).

2. Administration Data

2.1 Testing Laboratory

Test Site	SPORTON INTERNATIONAL (KUNSHAN) INC.
Test Site Location	No. 3-2, PingXiang Road, Kunshan, Jiangsu Province, P.R.C. TEL: +86-0512-5790-0158 FAX: +86-0512-5790-0958

2.2 Applicant

Company Name	ZTE CORPORATION
Address	ZTE Plaza, Keji Road South, Hi-Tech, Industrial Park, Nanshan District, Shenzhen, Guangdong, P.R.China

2.3 Manufacturer

Company Name	ZTE CORPORATION
Address	ZTE Plaza, Keji Road South, Hi-Tech, Industrial Park, Nanshan District, Shenzhen, Guangdong, P.R.China

2.4 Application Details

Date of Receipt of Application	Apr. 26, 2011
Date of Start during the Test	May 07, 2011
Date of End during the Test	May 11, 2011

3. General Information

3.1 Description of Device Under Test (DUT)

Product Feature & Specification	
DUT Type	Dual-Band
Brand Name	ZTE
Model Name	X500
FCC ID	Q78-X500
Tx Frequency	CDMA2000 BC0 : 824.70 MHz ~ 848.31 MHz CDMA2000 BC1 : 1815.25 MHz ~ 1908.75 MHz
Rx Frequency	CDMA2000 BC0 : 869.70 MHz ~ 893.31 MHz CDMA2000 BC1 : 1931.25 MHz ~ 1988.75 MHz
Maximum Output Power to Antenna	CDMA2000 BC0 : 24.21 dBm CDMA2000 BC1 : 24.62 dBm
Antenna Type	Fixed Internal Antenna
HW Version	X500MB_A
SW Version	ZTE-C X500_H0_Z0_E_TS3BG216
Type of Modulation	QPSK
DUT Stage	Identical Prototype

3.2 Product Photos

Please refer to Appendix D.

3.3 Applied Standards

The Specific Absorption Rate (SAR) testing specification, method and procedure for this device is in accordance with the following standards:

- FCC 47 CFR Part 2 (2.1093)
- IEEE C95.1-1991
- IEEE 1528-2003
- FCC OET Bulletin 65 Supplement C (Edition 01-01)
- FCC KDB 648474 D01 v01r05
- FCC KDB 941225 D01 v02

3.4 Device Category and SAR Limits

This device belongs to portable device category because its radiating structure is allowed to be used within 20 centimeters of the body of the user. Limit for General Population/Uncontrolled exposure should be applied for this device, it is 1.6 W/kg as averaged over any 1 gram of tissue.

3.5 Test Conditions

3.5.1 Ambient Condition

Ambient Temperature	20 to 24 ℃
Humidity	< 60 %

3.5.2 Test Configuration

The device was controlled by using a base station emulator. Communication between the device and the emulator was established by air link. The distance between the DUT and the antenna of the emulator is larger than 50 cm and the output power radiated from the emulator antenna is at least 30 dB smaller than the output power of DUT. The DUT was set from the emulator to radiate maximum output power during all tests.

For WWAN SAR testing, the DUT is in CDMA2000 link mode.

<Maximum SAR list for each band and position>

	CDMA BC0	CDMA BC15	CDMA BC1	802.11b/g	Max. SAR Summation
Right Cheek	0.72	1.41	**1.45**	**0.07**	1.52
Right Tilted	0.463	**0.678**	0.499	**0.067**	0.75
Left Cheek	0.722	**1.14**	1	**0.097**	1.24
Left Tilted	0.461	**0.554**	0.368	**0.062**	0.62
Face (Air Gap)	0.392	0.593	**0.758**	**0.012**	0.77
Bottom (Air Gap)	0.573	0.885	**1.09**	**0.025**	1.12

Note: The maximum SAR summation is calculated based on the same configuration and test position.

The maximum summation of SAR for WWAN and WLAN is as follow:
For Head : 1.45 (Right Cheek, CDMA BC1) + 0.07 (Right Cheek, 802.11b) = 1.52 W/kg.
For Body : 1.09 (Bottom, CDMA BC1) + 0.025 (Bottom, 802.11b) = 1.115 W/kg.

According to KDB 648474, the simultaneous transmission SAR for WWAN and WLAN was not required, because the SAR summation (Head : 1.52 W/kg ; Body : 1.115 W/kg) is less than 1.6 W/kg.

Since Bluetooth power (5.66dBm) is less than Pref (10.8dBm) and Bluetooth antenna is more than 2.5cm away from WWAN, therefore Bluetooth standalone and simultaneous SAR consideration is not necessary.

4. Specific Absorption Rate (SAR)

4.1 Introduction

SAR is related to the rate at which energy is absorbed per unit mass in an object exposed to a radio field. The SAR distribution in a biological body is complicated and is usually carried out by experimental techniques or numerical modeling. The standard recommends limits for two tiers of groups, occupational/controlled and general population/uncontrolled, based on a person's awareness and ability to exercise control over his or her exposure. In general, occupational/controlled exposure limits are higher than the limits for general population/uncontrolled.

4.2 SAR Definition

The SAR definition is the time derivative (rate) of the incremental energy (dW) absorbed by (dissipated in) an incremental mass (dm) contained in a volume element (dv) of a given density (ρ). The equation description is as below:

$$\mathbf{SAR} = \frac{\mathbf{d}}{\mathbf{dt}}\left(\frac{\mathbf{dW}}{\mathbf{dm}}\right) = \frac{\mathbf{d}}{\mathbf{dt}}\left(\frac{\mathbf{dW}}{\boldsymbol{\rho}\mathbf{dv}}\right)$$

SAR is expressed in units of Watts per kilogram (W/kg)

SAR measurement can be either related to the temperature elevation in tissue by

$$\mathbf{SAR} = \mathbf{C}\left(\frac{\boldsymbol{\delta}\mathbf{T}}{\boldsymbol{\delta}\mathbf{t}}\right)$$

Where: C is the specific head capacity, δT is the temperature rise and δt is the exposure duration, or related to the electrical field in the tissue by

$$\mathbf{SAR} = \frac{\boldsymbol{\sigma}|\mathbf{E}|^2}{\boldsymbol{\rho}}$$

Where: σ is the conductivity of the tissue, ρ is the mass density of the tissue and E is the RMS electrical field strength.

However for evaluating SAR of low power transmitter, electrical field measurement is typically applied.

5. SAR Measurement System

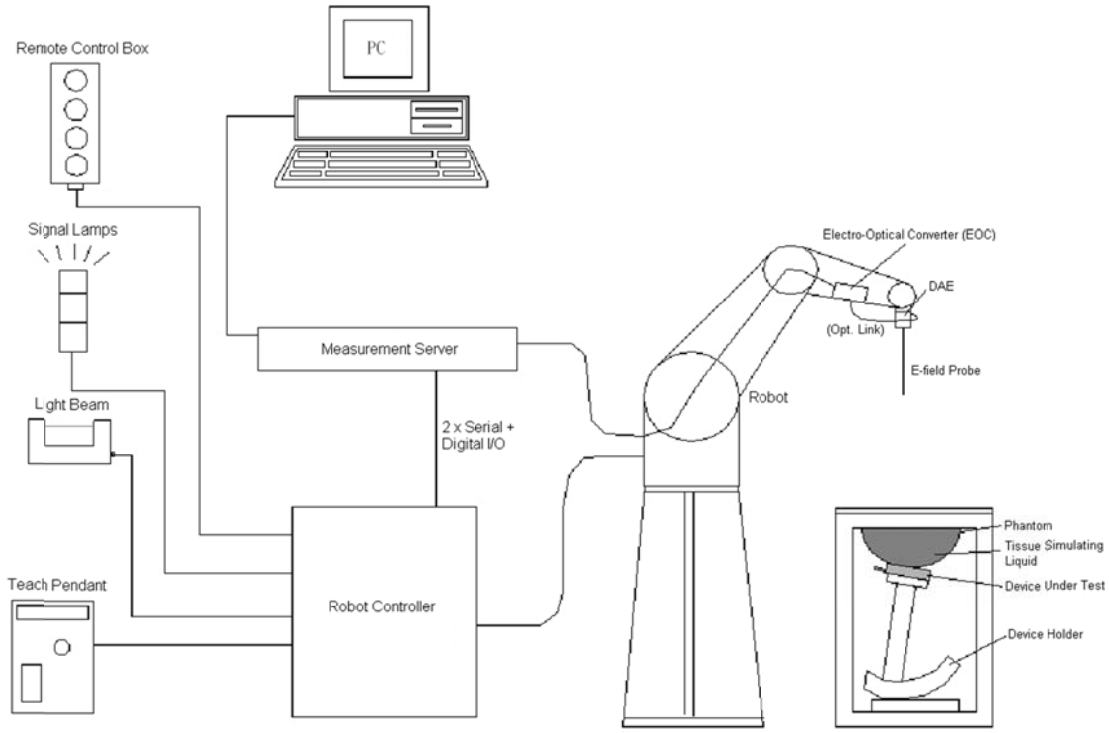

Fig 5.1 SPEAG DASY5 System Configurations

The DASY5 system for performance compliance tests is illustrated above graphically. This system consists of the following items:

- A standard high precision 6-axis robot with controller, a teach pendant and software
- A data acquisition electronic (DAE) attached to the robot arm extension
- A dosimetric probe equipped with an optical surface detector system
- The electro-optical converter (ECO) performs the conversion between optical and electrical signals
- A measurement server performs the time critical tasks such as signal filtering, control of the robot operation and fast movement interrupts.
- A probe alignment unit which improves the accuracy of the probe positioning
- A computer operating Windows XP
- DASY5 software
- Remove control with teach pendant and additional circuitry for robot safety such as warming lamps, etc.
- The SAM twin phantom
- A device holder
- Tissue simulating liquid
- Dipole for evaluating the proper functioning of the system

Some of the components are described in details in the following sub-sections.

5.1 E-Field Probe

The SAR measurement is conducted with the dosimetric probe (manufactured by SPEAG).The probe is specially designed and calibrated for use in liquid with high permittivity. The dosimetric probe has special calibration in liquid at different frequency. This probe has a built in optical surface detection system to prevent from collision with phantom.

5.1.1 E-Field Probe Specification

<ET3DV6>

Construction	Symmetrical design with triangular core Built-in optical fiber for surface detection system. Built-in shielding against static charges. PEEK enclosure material (resistant to organic solvents, e.g., DGBE)
Frequency	10 MHz to 3 GHz; Linearity: ± 0.2 dB
Directivity	± 0.2 dB in HSL (rotation around probe axis) ± 0.4 dB in HSL (rotation normal to probe axis)
Dynamic Range	5 µW/g to 100 mW/g; Linearity: ± 0.2 dB
Dimensions	Overall length: 330 mm (Tip: 16 mm) Tip diameter: 6.8 mm (Body: 12 mm) Distance from probe tip to dipole centers: 2.7 mm

Fig 5.2 Photo of ET3DV6

5.1.2 E-Field Probe Calibration

Each probe needs to be calibrated according to a dosimetric assessment procedure with accuracy better than ± 10%. The spherical isotropy shall be evaluated and within ± 0.25 dB. The sensitivity parameters (NormX, NormY, and NormZ), the diode compression parameter (DCP) and the conversion factor (ConvF) of the probe are tested. The calibration data can be referred to appendix C of this report.

5.2 Data Acquisition Electronics (DAE)

The data acquisition electronics (DAE) consists of a highly sensitive electrometer-grade preamplifier with auto-zeroing, a channel and gain-switching multiplexer, a fast 16 bit AD-converter and a command decoder and control logic unit. Transmission to the measurement server is accomplished through an optical downlink for data and status information as well as an optical uplink for commands and the clock.

The input impedance of the DAE is 200 MOhm; the inputs are symmetrical and floating. Common mode rejection is above 80 dB.

Fig 5.3 Photo of DAE

5.3 Robot

The SPEAG DASY system uses the high precision robots (DASY5: TX90XL) type from Stäubli SA (France). For the 6-axis controller system, the robot controller version (DASY5: CS8c) from Stäubli is used. The Stäubli robot series have many features that are important for our application:

- High precision (repeatability ±0.035 mm)
- High reliability (industrial design)
- Jerk-free straight movements
- Low ELF interference (the closed metallic construction shields against motor control fields)

Fig 5.4 Photo of DASY5

5.4 Measurement Server

The measurement server is based on a PC/104 CPU board with CPU (DASY5: 400 MHz, Intel Celeron), chipdisk (DASY5: 128 MB), RAM (DASY5: 128 MB). The necessary circuits for communication with the DAE electronic box, as well as the 16 bit AD converter system for optical detection and digital I/O interface are contained on the DASY I/O board, which is directly connected to the PC/104 bus of the CPU board.

The measurement server performs all the real-time data evaluation for field measurements and surface detection, controls robot movements and handles safety operations.

Fig 5.5 Photo of Server for DASY5

5.5 Phantom

<SAM Twin Phantom>

Shell Thickness	2 ± 0.2 mm; Center ear point: 6 ± 0.2 mm	 **Fig 5.6 Photo of SAM Phantom**
Filling Volume	Approx. 25 liters	
Dimensions	Length: 1000 mm; Width: 500 mm; Height: adjustable feet	
Measurement Areas	Left Hand, Right Hand, Flat Phantom	

The bottom plate contains three pair of bolts for locking the device holder. The device holder positions are adjusted to the standard measurement positions in the three sections. A white cover is provided to tap the phantom during off-periods to prevent water evaporation and changes in the liquid parameters. On the phantom top, three reference markers are provided to identify the phantom position with respect to the robot.

<ELI4 Phantom>

Shell Thickness	2 ± 0.2 mm (sagging: <1%)	 **Fig 5.7 Photo of ELI4 Phantom**
Filling Volume	Approx. 30 liters	
Dimensions	Major ellipse axis: 600 mm Minor axis: 400 mm	

The ELI4 phantom is intended for compliance testing of handheld and body-mounted wireless devices in the frequency range of 30 MHz to 6 GHz. ELI4 is fully compatible with standard and all known tissue simulating liquids.

5.6 Device Holder

<Device Holder for SAM Twin Phantom>

The SAR in the phantom is approximately inversely proportional to the square of the distance between the source and the liquid surface. For a source at 5 mm distance, a positioning uncertainty of ± 0.5 mm would produce a SAR uncertainty of ± 20 %. Accurate device positioning is therefore crucial for accurate and repeatable measurements. The positions in which the devices must be measured are defined by the standards.

The DASY device holder is designed to cope with different positions given in the standard. It has two scales for the device rotation (with respect to the body axis) and the device inclination (with respect to the line between the ear reference points). The rotation center for both scales is the ear reference point (EPR). Thus the device needs no repositioning when changing the angles.

The DASY device holder is constructed of low-loss POM material having the following dielectric parameters: relative permittivity ε = 3 and loss tangent δ = 0.02. The amount of dielectric material has been reduced in the closest vicinity of the device, since measurements have suggested that the influence of the clamp on the test results could thus be lowered.

Fig 5.8 Device Holder

5.7 Data Storage and Evaluation

5.7.1 Data Storage

The DASY software stores the assessed data from the data acquisition electronics as raw data (in microvolt readings from the probe sensors), together with all the necessary software parameters for the data evaluation (probe calibration data, liquid parameters and device frequency and modulation data) in measurement files. The post-processing software evaluates the desired unit and format for output each time the data is visualized or exported. This allows verification of the complete software setup even after the measurement and allows correction of erroneous parameter settings. For example, if a measurement has been performed with an incorrect crest factor parameter in the device setup, the parameter can be corrected afterwards and the data can be reevaluated.

The measured data can be visualized or exported in different units or formats, depending on the selected probe type (e.g., [V/m], [A/m], [mW/g]). Some of these units are not available in certain situations or give meaningless results, e.g., a SAR-output in a non-lose media, will always be zero. Raw data can also be exported to perform the evaluation with other software packages.

5.7.2 Data Evaluation

The DASY post-processing software (SEMCAD) automatically executes the following procedures to calculate the field units from the microvolt readings at the probe connector. The parameters used in the evaluation are stored in the configuration modules of the software：

Probe parameters：	- Sensitivity	$Norm_i$, a_{i0}, a_{i1}, a_{i2}
	- Conversion factor	$ConvF_i$
	- Diode compression point	dcp_i
Device parameters：	- Frequency	f
	- Crest factor	cf
Media parameters：	- Conductivity	σ
	- Density	ρ

These parameters must be set correctly in the software. They can be found in the component documents or they can be imported into the software from the configuration files issued for the DASY components. In the direct measuring mode of the multi-meter option, the parameters of the actual system setup are used. In the scan visualization and export modes, the parameters stored in the corresponding document files are used.

The first step of the evaluation is a linearization of the filtered input signal to account for the compression characteristics of the detector diode. The compensation depends on the input signal, the diode type and the DC-transmission factor from the diode to the evaluation electronics. If the exciting field is pulsed, the crest factor of the signal must be known to correctly compensate for peak power.

The formula for each channel can be given as：

$$\mathbf{V_i = U_i + U_i^2 \cdot \frac{cf}{dcp_i}}$$

with V_i = compensated signal of channel i, (i = x, y, z)
U_i = input signal of channel i, (i = x, y, z)
cf = crest factor of exciting field (DASY parameter)
dcp_i = diode compression point (DASY parameter)

From the compensated input signals, the primary field data for each channel can be evaluated：

E-field Probes：$\mathbf{E_i = \sqrt{\frac{V_i}{Norm_i \cdot ConvF}}}$

H-field Probes：$\mathbf{H_i = \sqrt{V_i} \cdot \frac{a_{i0}+a_{i1}f+a_{i2}f^2}{f}}$

with V_i = compensated signal of channel i, (i = x, y, z)
$Norm_i$ = sensor sensitivity of channel i, (i = x, y, z), $\mu V/(V/m)^2$ for E-field Probes
ConvF = sensitivity enhancement in solution
a_{ij} = sensor sensitivity factors for H-field probes
f = carrier frequency [GHz]
E_i = electric field strength of channel i in V/m
H_i = magnetic field strength of channel i in A/m

The RSS value of the field components gives the total field strength (Hermitian magnitude)：

$$\mathbf{E_{tot} = \sqrt{E_x^2 + E_y^2 + E_z^2}}$$

The primary field data are used to calculate the derived field units.

$$\mathbf{SAR = E_{tot}^2 \cdot \frac{\sigma}{\rho \cdot 1000}}$$

with SAR = local specific absorption rate in mW/g
E_{tot} = total field strength in V/m
σ = conductivity in [mho/m] or [Siemens/m]
ρ = equivalent tissue density in g/cm^3

Note that the density is set to 1, to account for actual head tissue density rather than the density of the tissue simulating liquid.

5.8 Test Equipment List

Manufacturer	Name of Equipment	Type/Model	Serial Number	Calibration	
				Last Cal.	Due Date
SPEAG	Dosimetric E-Field Probe	ET3DV6	1788	Sep. 21, 2010	Sep. 20, 2011
SPEAG	Data Acquisition Electronics	DAE4	1210	Nov. 18, 2010	Nov. 17, 2011
SPEAG	835MHz System Validation Kit	D835V2	4d082	Jul. 20, 2010	Jul. 19, 2012
SPEAG	1800MHz System Validation Kit	D1800V2	2d052	Jun. 15, 2010	Jun. 14, 2012
SPEAG	1900MHz System Validation Kit	D1900V2	5d018	Jun. 15, 2010	Jun. 14, 2012
SPEAG	SAM Twin Phantom	QD 000 P40 CB	TP-1477	NCR	NCR
SPEAG	SAM Twin Phantom	QD 000 P40 CB	TP-1479	NCR	NCR
SPEAG	ELI4 Phantom	QD OVA 001 BB	1079	NCR	NCR
Agilent	ENA Series Network Analyzer	E5071C	MY46106933	Jul. 06, 2010	Jul. 05, 2011
Agilent	Wireless Communication Test Set	E5515C	MY48367160	Feb. 16, 2010	Feb. 15, 2012
R&S	Universal Radio Communication Tester	CMU200	116456	Sep. 11, 2010	Sep. 10, 2011
Agilent	Dielectric Probe Kit	85070E	MY44300475	NCR	NCR
AR	Amplifier	551G4	0333096	NCR	NCR
R&S	Signal Generator	SMR40	100455	Jan. 06, 2011	Jan. 05, 2012
R&S	Spectrum Analyzer	FSP40	100055	Jun. 11, 2010	Jun. 10, 2011

Table 5.1 Test Equipment List

Note: The calibration certificate of DASY can be referred to appendix C of this report.

6. Tissue Simulating Liquids

For the measurement of the field distribution inside the SAM phantom with DASY, the phantom must be filled with around 25 liters of homogeneous body tissue simulating liquid. For head SAR testing, the liquid height from the ear reference point (ERP) of the phantom to the liquid top surface is larger than 15 cm, which is shown in Fig. 6.1. For body SAR testing, the liquid height from the center of the flat phantom to the liquid top surface is larger than 15 cm, which is shown in Fig. 6.2.

Fig 6.1 Photo of Liquid Height for Head SAR

Fig 6.2 Photo of Liquid Height for Body SAR

The following table gives the recipes for tissue simulating liquid.

Frequency (MHz)	Water (%)	Sugar (%)	Cellulose (%)	Salt (%)	Preventol (%)	DGBE (%)	Conductivity (σ)	Permittivity (ε_r)
For Head								
835	40.3	57.9	0.2	1.4	0.2	0	0.90	41.5
900	40.3	57.9	0.2	1.4	0.2	0	0.97	41.5
1800, 1900, 2000	55.2	0	0	0.3	0	44.5	1.40	40.0
2450	55.0	0	0	0	0	45.0	1.80	39.2
For Body								
835	50.8	48.2	0	0.9	0.1	0	0.97	55.2
900	50.8	48.2	0	0.9	0.1	0	1.05	55.0
1800, 1900, 2000	70.2	0	0	0.4	0	29.4	1.52	53.3
2450	68.6	0	0	0	0	31.4	1.95	52.7

Table 6.1 Recipes of Tissue Simulating Liquid

The following table gives the targets for tissue simulating liquid.

Frequency (MHz)	Liquid Type	Conductivity (σ)	±5% Range	Permittivity (ε_r)	±5% Range
835	Head	0.90	0.86 ~ 0.95	41.5	39.4 ~ 43.6
900	Head	0.97	0.92 ~ 1.02	41.5	39.4 ~ 43.6
1800, 1900, 2000	Head	1.40	1.33 ~ 1.47	40.0	38.0 ~ 42.0
2450	Head	1.80	1.71 ~ 1.89	39.2	37.2 ~ 41.2
835	Body	0.97	0.92 ~ 1.02	55.2	52.4 ~ 58.0
900	Body	1.05	1.00 ~ 1.10	55.0	52.3 ~ 57.8
1800, 1900, 2000	Body	1.52	1.44 ~ 1.60	53.3	50.6 ~ 56.0
2450	Body	1.95	1.85 ~ 2.05	52.7	50.1 ~ 55.3

Table 6.2 Targets of Tissue Simulating Liquid

The dielectric parameters of the liquids were verified prior to the SAR evaluation using an Agilent 85070E Dielectric Probe Kit and an Agilent Network Analyzer.

The following table shows the measuring results for simulating liquid.

Frequency (MHz)	Liquid Type	Temperature (℃)	Conductivity (σ)	Permittivity (ε_r)	Measurement Date
835	Head	21.6	0.912	41.9	May. 10, 2011
835	Body	21.4	0.976	54.4	May. 11, 2011
1800	Head	21.3	1.43	39.5	May. 10, 2011
1800	Body	21.4	1.56	50.8	May. 11, 2011
1900	Head	21.4	1.41	39.6	May. 09, 2011
1900	Body	21.4	1.53	52.4	May. 11, 2011

Table 6.3 Measuring Results for Simulating Liquid

7. Uncertainty Assessment

The component of uncertainly may generally be categorized according to the methods used to evaluate them. The evaluation of uncertainly by the statistical analysis of a series of observations is termed a Type An evaluation of uncertainty. The evaluation of uncertainty by means other than the statistical analysis of a series of observation is termed a Type B evaluation of uncertainty. Each component of uncertainty, however evaluated, is represented by an estimated standard deviation, termed standard uncertainty, which is determined by the positive square root of the estimated variance.

A Type A evaluation of standard uncertainty may be based on any valid statistical method for treating data. This includes calculating the standard deviation of the mean of a series of independent observations; using the method of least squares to fit a curve to the data in order to estimate the parameter of the curve and their standard deviations; or carrying out an analysis of variance in order to identify and quantify random effects in certain kinds of measurement.

A type B evaluation of standard uncertainty is typically based on scientific judgment using all of the relevant information available. These may include previous measurement data, experience and knowledge of the behavior and properties of relevant materials and instruments, manufacture's specification, data provided in calibration reports and uncertainties assigned to reference data taken from handbooks. Broadly speaking, the uncertainty is either obtained from an outdoor source or obtained from an assumed distribution, such as the normal distribution, rectangular or triangular distributions indicated in Table 7.1

Uncertainty Distributions	Normal	Rectangular	Triangular	U-Shape
Multi-plying Factor[(a)]	1/k[(b)]	$1/\sqrt{3}$	$1/\sqrt{6}$	$1/\sqrt{2}$

(a) standard uncertainty is determined as the product of the multiplying factor and the estimated range of variations in the measured quantity

(b) κ is the coverage factor

Table 7.1 Standard Uncertainty for Assumed Distribution

The combined standard uncertainty of the measurement result represents the estimated standard deviation of the result. It is obtained by combining the individual standard uncertainties of both Type A and Type B evaluation using the usual "root-sum-squares" (RSS) methods of combining standard deviations by taking the positive square root of the estimated variances.

Expanded uncertainty is a measure of uncertainty that defines an interval about the measurement result within which the measured value is confidently believed to lie. It is obtained by multiplying the combined standard uncertainty by a coverage factor. Typically, the coverage factor ranges from 2 to 3. Using a coverage factor allows the true value of a measured quantity to be specified with a defined probability within the specified uncertainty range. For purpose of this document, a coverage factor two is used, which corresponds to confidence interval of about 95 %. The DASY uncertainty Budget is showed in Table 7.2.

Error Description	Uncertainty Value (±%)	Probability Distribution	Divisor	Ci (1g)	Standard Uncertainty (1g)
Measurement System					
Probe Calibration	5.5	Normal	1	1	± 5.5 %
Axial Isotropy	4.7	Rectangular	√3	0.7	± 1.9 %
Hemispherical Isotropy	9.6	Rectangular	√3	0.7	± 3.9 %
Boundary Effects	1.0	Rectangular	√3	1	± 0.6 %
Linearity	4.7	Rectangular	√3	1	± 2.7 %
System Detection Limits	1.0	Rectangular	√3	1	± 0.6 %
Readout Electronics	0.3	Normal	1	1	± 0.3 %
Response Time	0.8	Rectangular	√3	1	± 0.5 %
Integration Time	2.6	Rectangular	√3	1	± 1.5 %
RF Ambient Noise	3.0	Rectangular	√3	1	± 1.7 %
RF Ambient Reflections	3.0	Rectangular	√3	1	± 1.7 %
Probe Positioner	0.4	Rectangular	√3	1	± 0.2 %
Probe Positioning	2.9	Rectangular	√3	1	± 1.7 %
Max. SAR Eval.	1.0	Rectangular	√3	1	± 0.6 %
Test Sample Related					
Device Positioning	2.9	Normal	1	1	± 2.9 %
Device Holder	3.6	Normal	1	1	± 3.6 %
Power Drift	5.0	Rectangular	√3	1	± 2.9 %
Phantom and Setup					
Phantom Uncertainty	4.0	Rectangular	√3	1	± 2.3 %
Liquid Conductivity (Target)	5.0	Rectangular	√3	0.64	± 1.8 %
Liquid Conductivity (Meas.)	2.5	Normal	1	0.64	± 1.6 %
Liquid Permittivity (Target)	5.0	Rectangular	√3	0.6	± 1.7 %
Liquid Permittivity (Meas.)	2.5	Normal	1	0.6	± 1.5 %
Combined Standard Uncertainty					± 10.7 %
Coverage Factor for 95 %					K = 2
Expanded Uncertainty					**± 21.4 %**

Table 7.2 Uncertainty Budget of DASY for frequency range 300 MHz to 3 GHz

8. SAR Measurement Evaluation

Each DASY system is equipped with one or more system validation kits. These units, together with the predefined measurement procedures within the DASY software, enable the user to conduct the system performance check and system validation. System validation kit includes a dipole, tripod holder to fix it underneath the flat phantom and a corresponding distance holder.

8.1 Purpose of System Performance check

The system performance check verifies that the system operates within its specifications. System and operator errors can be detected and corrected. It is recommended that the system performance check be performed prior to any usage of the system in order to guarantee reproducible results. The system performance check uses normal SAR measurements in a simplified setup with a well characterized source. This setup was selected to give a high sensitivity to all parameters that might fail or vary over time. The system check does not intend to replace the calibration of the components, but indicates situations where the system uncertainty is exceeded due to drift or failure.

8.2 System Setup

In the simplified setup for system evaluation, the DUT is replaced by a calibrated dipole and the power source is replaced by a continuous wave that comes from a signal generator. The calibrated dipole must be placed beneath the flat phantom section of the SAM twin phantom with the correct distance holder. The distance holder should touch the phantom surface with a light pressure at the reference marking and be oriented parallel to the long side of the phantom. The equipment setup is shown below:

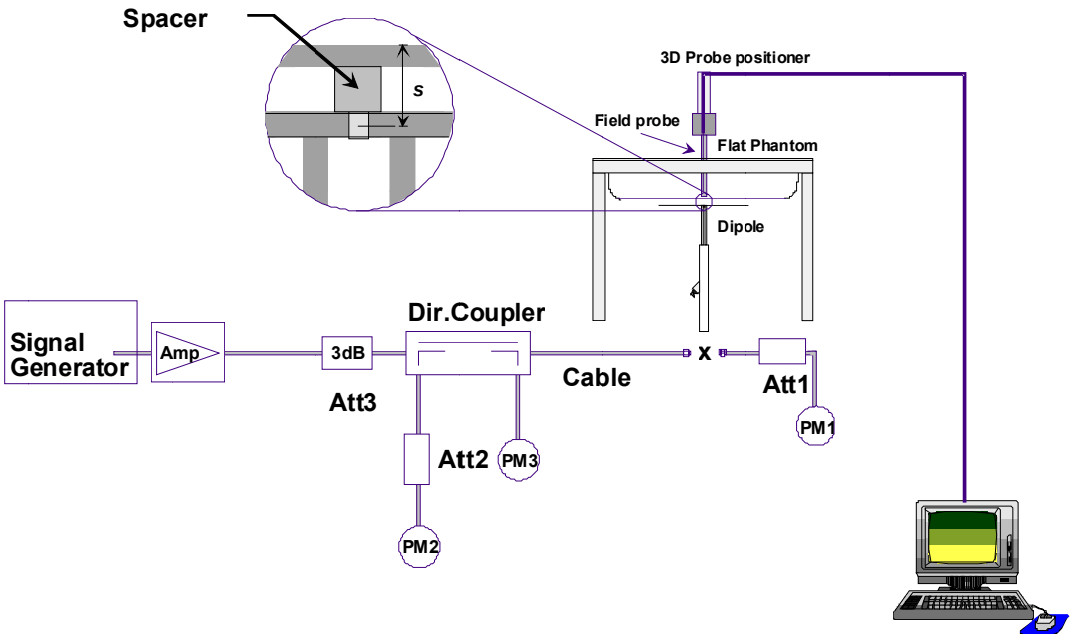

Fig 8.1 System Setup for System Evaluation

1. Signal Generator
2. Amplifier
3. Directional Coupler
4. Power Meter
5. Calibrated Dipole

The output power on dipole port must be calibrated to 24 dBm (250 mW) before dipole is connected.

Fig 8.2 Photo of Dipole Setup

8.3 Validation Results

Comparing to the original SAR value provided by SPEAG, the validation data should be within its specification of 10 %. Table 8.1 shows the target SAR and measured SAR after normalized to 1W input power. The table below indicates the system performance check can meet the variation criterion and the plots can be referred to Appendix A of this report.

Measurement Date	Frequency (MHz)	Targeted SAR_{1g} (W/kg)	Measured SAR_{1g} (W/kg)	normalized SAR (W/kg)	Deviation (%)
May. 10, 2011	835	9.650	2.440	9.76	1.14
May. 11, 2011	835	10.000	2.540	10.16	1.60
May. 10, 2011	1800	38.800	9.100	36.40	-6.19
May. 11, 2011	1800	38.900	9.720	38.88	-0.05
May. 09, 2011	1900	39.200	9.990	39.96	1.94
May. 11, 2011	1900	40.900	10.800	43.20	5.62

Table 8.1 Target and Measurement SAR after Normalized

9. DUT Testing Position

This DUT was tested in six different positions. They are right cheek, right tilted, left cheek, left tilted, face of the DUT with phantom 1.5 cm gap, and bottom of the DUT with phantom 1.5 cm gap as illustrated below:

1. Define two imaginary lines on the handset

(a) The vertical centerline passes through two points on the front side of the handset - the midpoint of the width w_t of the handset at the level of the acoustic output, and the midpoint of the width w_b of the bottom of the handset.

(b) The horizontal line is perpendicular to the vertical centerline and passes through the center of the acoustic output. The horizontal line is also tangential to the face of the handset at point A.

(c) The two lines intersect at point A. Note that for many handsets, point A coincides with the center of the acoustic output; however, the acoustic output may be located elsewhere on the horizontal line. Also note that the vertical centerline is not necessarily parallel to the front face of the handset, especially for clamshell handsets, handsets with flip covers, and other irregularly shaped handsets.

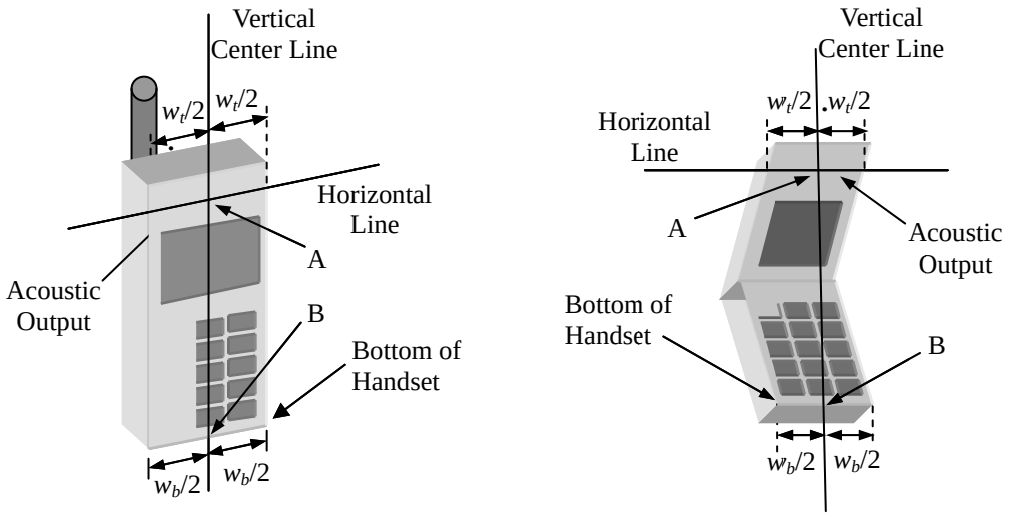

Fig 9.1 Illustration for Handset Vertical and Horizontal Reference Lines

2. Cheek Position

(a) To position the device with the vertical center line of the body of the device and the horizontal line crossing the center piece in a plane parallel to the sagittal plane of the phantom. While maintaining the device in this plane, align the vertical center line with the reference plane containing the three ear and mouth reference point (M: Mouth, RE: Right Ear, and LE: Left Ear) and align the center of the ear piece with the line RE-LE.

(b) To move the device towards the phantom with the ear piece aligned with the line LE-RE until the phone touched the ear. While maintaining the device in the reference plane and maintaining the phone contact with the ear, move the bottom of the phone until any point on the front side is in contact with the cheek of the phantom or until contact with the ear is lost (see Fig. 9.2).

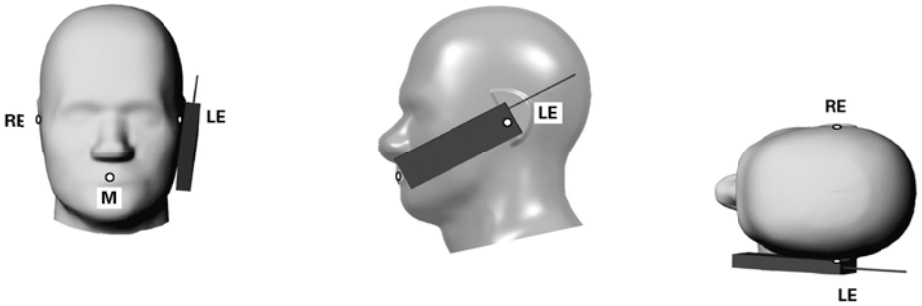

Fig 9.2 Illustration for Cheek Position

3. Tilted Position

(a) To position the device in the "cheek" position described above.

(b) While maintaining the device the reference plane described above and pivoting against the ear, moves it outward away from the mouth by an angle of 15 degrees or until contact with the ear is lost (see Fig. 9.3).

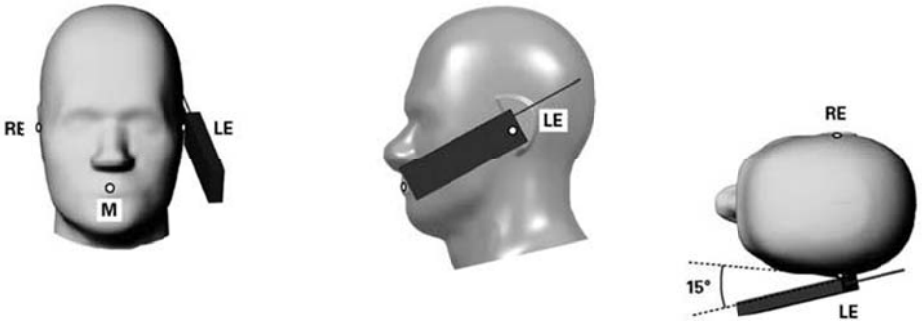

Fig 9.3 Illustration for Tilted Position

4. Body Worn Position

(a) To position the device parallel to the phantom surface with either keypad up or down.

(b) To adjust the device parallel to the flat phantom.

(c) To adjust the distance between the device surface and the flat phantom to 1.5 cm.

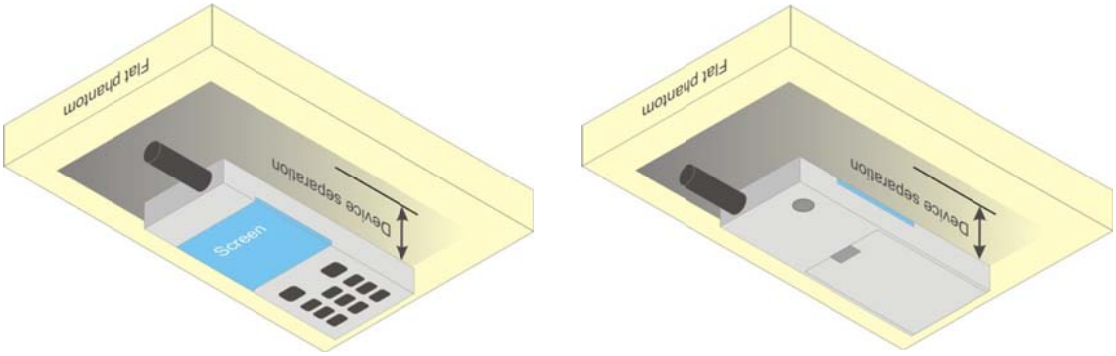

Fig 9.4 Illustration for Body Worn Position

5. DUT Setup Photos

Please refer to Appendix E for the test setup photos.

10. Measurement Procedures

The measurement procedures are as follows:

(a) For WWAN function, link DUT with base station emulator in highest power channel
(b) Set base station emulator to allow DUT to radiate maximum output power
(c) Measure output power through RF cable and power meter
(d) Place the DUT in the positions described in the last section
(e) Set scan area, grid size and other setting on the DASY software
(f) Taking data for the middle channel on each testing position
(g) Find out the largest SAR result on these testing positions of each band
(h) Measure SAR results for other channels in worst SAR testing position if the SAR of highest power channel is larger than 0.8 W/kg

According to the test standard, the recommended procedure for assessing the peak spatial-average SAR value consists of the following steps:

(a) Power reference measurement
(b) Area scan
(c) Zoom scan
(d) Power drift measurement

10.1 Spatial Peak SAR Evaluation

The procedure for spatial peak SAR evaluation has been implemented according to the test standard. It can be conducted for 1g and 10g, as well as for user-specific masses. The DASY software includes all numerical procedures necessary to evaluate the spatial peak SAR value.

The base for the evaluation is a "cube" measurement. The measured volume must include the 1g and 10g cubes with the highest averaged SAR values. For that purpose, the center of the measured volume is aligned to the interpolated peak SAR value of a previously performed area scan.

The entire evaluation of the spatial peak values is performed within the post-processing engine (SEMCAD). The system always gives the maximum values for the 1g and 10g cubes. The algorithm to find the cube with highest averaged SAR is divided into the following stages:

(a) Extraction of the measured data (grid and values) from the Zoom Scan
(b) Calculation of the SAR value at every measurement point based on all stored data (A/D values and measurement parameters)
(c) Generation of a high-resolution mesh within the measured volume
(d) Interpolation of all measured values form the measurement grid to the high-resolution grid
(e) Extrapolation of the entire 3-D field distribution to the phantom surface over the distance from sensor to surface
(f) Calculation of the averaged SAR within masses of 1g and 10g

10.2 Area & Zoom Scan Procedures

First Area Scan is used to locate the approximate location(s) of the local peak SAR value(s). The measurement grid within an Area Scan is defined by the grid extent, grid step size and grid offset. Next, in order to determine the EM field distribution in a three-dimensional spatial extension, Zoom Scan is required. The Zoom Scan measures 5x5x7 points with step size 8, 8 and 5 mm for 300 MHz to 3 GHz. The Zoom Scan is performed around the highest E-field value to determine the averaged SAR-distribution over 10 g.

10.3 Volume Scan Procedures

The volume scan is used for assess overlapping SAR distributions for antennas transmitting in different frequency bands. It is equivalent to an oversized zoom scan used in standalone measurements. The measurement volume will be used to enclose all the simultaneous transmitting antennas. For antennas transmitting simultaneously in different frequency bands, the volume scan is measured separately in each frequency band. In order to sum correctly to compute the 1g aggregate SAR, the DUT remain in the same test position for all measurements and all volume scan use the same spatial resolution and grid spacing (step-size is 4, 4 and 2.5 mm). When all volume scan were completed, the software, SEMCAD postprocessor can combine and subsequently superpose these measurement data to calculating the multiband SAR.

10.4 SAR Averaged Methods

In DASY, the interpolation and extrapolation are both based on the modified Quadratic Shepard's method. The interpolation scheme combines a least-square fitted function method and a weighted average method which are the two basic types of computational interpolation and approximation.

Extrapolation routines are used to obtain SAR values between the lowest measurement points and the inner phantom surface. The extrapolation distance is determined by the surface detection distance and the probe sensor offset. The uncertainty increases with the extrapolation distance. To keep the uncertainty within 1% for the 1 g and 10 g cubes, the extrapolation distance should not be larger than 5 mm.

10.5 Power Drift Monitoring

All SAR testing is under the DUT install full charged battery and transmit maximum output power. In DASY measurement software, the power reference measurement and power drift measurement procedures are used for monitoring the power drift of DUT during SAR test. Both these procedures measure the field at a specified reference position before and after the SAR testing. The software will calculate the field difference in dB. If the power drift more than 5%, the SAR will be retested.

11. SAR Test Results

11.1 Conducted Power (Unit: dBm)

Band	CDMA2000 BC0			CDMA2000 BC1		
Channel	1013	384	777	25	600	1175
Frequency (MHz)	824.70	836.52	848.31	1851.25	1880.00	1908.75
1xRTT RC1+SO55	24.11	24.09	23.90	24.18	24.07	24.58
1xRTT RC3+SO55	24.10	24.08	23.88	24.21	24.05	24.45
1xRTT RC3+SO32 (FCH)	24.09	24.07	23.87	24.12	24.01	24.47
1xRTT RC3+SO32 (SCH)	24.05	24.08	23.84	24.14	24.04	24.48
EVDO RTAP 153.6K	23.99	23.95	23.84	24.17	24.03	24.51
1xEVDO RETAP 4096	24.21	24.06	23.90	24.19	24.09	24.62

Band	CDMA2000 BC15		
Channel	25	425	875
Frequency (MHz)	1711.25	1731.25	1753.75
1xRTT RC1+SO55	23.40	24.29	23.38
1xRTT RC3+SO55	23.33	24.44	23.37
1xRTT RC3+SO32 (FCH)	23.27	24.42	23.29
1xRTT RC3+SO32 (SCH)	23.32	24.37	23.31
EVDO RTAP 153.6K	23.30	24.40	23.28
1xEVDO RETAP 4096	23.44	24.43	23.35

Note: Per KDB 941225 D01, RC3+SO55 is used for Handset Head SAR testing and RC3+SO32 is used for Handset Body SAR testing; Ev-Do mode SAR is not necessary due to its output power is less than 1/4dB higher than RC3.

11.2 Test Records for Head SAR Test

Plot No.	Band	Mode	Test Position	Channel	SAR_{1g} (W/kg)
28	CDMA2000 BC0	RC3+SO55	Right Cheek	1013	0.72
29	CDMA2000 BC0	RC3+SO55	Right Titled	1013	0.463
30	**CDMA2000 BC0**	**RC3+SO55**	**Left Cheek**	**1013**	**0.722**
31	CDMA2000 BC0	RC3+SO55	Left Titled	1013	0.461
20	CDMA2000 BC15	RC3+SO55	Right Cheek	425	1.41
21	CDMA2000 BC15	RC3+SO55	Right Titled	425	0.678
22	**CDMA2000 BC15**	**RC3+SO55**	**Left Cheek**	**425**	**1.14**
23	CDMA2000 BC15	RC3+SO55	Left Titled	425	0.554
24	CDMA2000 BC15	RC3+SO55	Right Cheek	25	1.36
25	CDMA2000 BC15	RC3+SO55	Right Cheek	875	1.37
26	CDMA2000 BC15	RC3+SO55	Left Cheek	25	1.09
27	CDMA2000 BC15	RC3+SO55	Left Cheek	875	1.02
12	CDMA2000 BC1	RC3+SO55	Right Cheek	1175	1.42
13	CDMA2000 BC1	RC3+SO55	Right Titled	1175	0.499
14	CDMA2000 BC1	RC3+SO55	Left Cheek	1175	1
15	CDMA2000 BC1	RC3+SO55	Left Titled	1175	0.368
16	**CDMA2000 BC1**	**RC3+SO55**	**Right Cheek**	**25**	**1.45**
17	CDMA2000 BC1	RC3+SO55	Right Cheek	600	1.43
18	CDMA2000 BC1	RC3+SO55	Left Cheek	25	0.986
19	CDMA2000 BC1	RC3+SO55	Left Cheek	600	0.986

11.3 Test Records for Body SAR Test

Plot No.	Band	Mode	Test Position	Separation Distance (cm)	Channel	SAR_{1g} (W/kg)
40	**CDMA2000 BC0**	**RC3+SO32**	**Bottom of the DUT**	**1.5**	**1013**	**0.573**
41	CDMA2000 BC0	RC3+SO32	Face of the DUT	1.5	1013	0.392
36	**CDMA2000 BC15**	**RC3+SO32**	**Bottom of the DUT**	**1.5**	**425**	**0.885**
37	CDMA2000 BC15	RC3+SO32	Face of the DUT	1.5	425	0.593
38	CDMA2000 BC15	RC3+SO32	Bottom of the DUT	1.5	25	0.876
39	CDMA2000 BC15	RC3+SO32	Bottom of the DUT	1.5	875	0.852
32	CDMA2000 BC1	RC3+SO32	Bottom of the DUT	1.5	1175	1.02
33	CDMA2000 BC1	RC3+SO32	Face of the DUT	1.5	1175	0.758
34	**CDMA2000 BC1**	**RC3+SO32**	**Bottom of the DUT**	**1.5**	**25**	**1.09**
35	CDMA2000 BC1	RC3+SO32	Bottom of the DUT	1.5	600	1.09

Test Engineer : Huiliu Liu and Suhe Yin

12. References

[1] FCC 47 CFR Part 2 "Frequency Allocations and Radio Treaty Matters; General Rules and Regulations"

[2] IEEE Std. C95.1-1991, "IEEE Standard for Safety Levels with Respect to Human Exposure to Radio Frequency Electromagnetic Fields, 3 kHz to 300 GHz", 1991

[3] IEEE Std. 1528-2003, "Recommended Practice for Determining the Peak Spatial-Average Specific Absorption Rate (SAR) in the Human Head from Wireless Communications Devices: Measurement Techniques", December 2003

[4] FCC OET Bulletin 65 (Edition 97-01) Supplement C (Edition 01-01), "Evaluating Compliance with FCC Guidelines for Human Exposure to Radiofrequency Electromagnetic Fields", June 2001

[5] SPEAG DASY System Handbook

[6] FCC KDB 248227 D01 v01r02, "SAR Measurement Procedures for 802.11 a/b/g Transmitters", May 2007

[7] FCC KDB 447498 D01 v04, "Mobile and Portable Device RF Exposure Procedures and Equipment Authorization Policies", November 2009

[8] FCC KDB 447498 D02 v02, "SAR Measurement Procedures for USB Dongle Transmitters", November 2009

[9] FCC KDB 616217 D01 v01r01, "SAR Evaluation Considerations for Laptop Computers with Antennas Built-in on Display Screens", November 2009

[10] FCC KDB 616217 D03 v01, "SAR Evaluation Considerations for Laptop/Notebook/Netbook and Tablet Computers", November 2009

[11] FCC KDB 648474 D01 v01r05, "SAR Evaluation Considerations for Handsets with Multiple Transmitters and Antennas", September 2008

[12] FCC KDB 941225 D01 v02, "SAR Measurement Procedures for 3G Devices – CDMA 2000 / Ev-Do / WCDMA / HSDPA / HSPA", October 2007

[13] FCC KDB 941225 D03 v01, "Recommended SAR Test Reduction Procedures for GSM / GPRS / EDGE", December 2008

[14] FCC KDB 941225 D04 v01, "Evaluating SAR for GSM/(E)GPRS Dual Transfer Mode", January 27 2010