Variant FCC SAR Test Report

APPLICANT	:	ZTE CORPORATION
EQUIPMENT	:	CDMA 1X-EVDO Digital Mobile Phone
BRAND NAME	:	ZTE
MODEL NAME	:	ZTE N861
FCC ID	:	Q78-ZTEN861
STANDARD	:	FCC 47 CFR Part 2 (2.1093) ANSI/IEEE C95.1-1992 IEEE 1528-2003 FCC OET Bulletin 65 Supplement C (Edition 01-01)

This is a variant report which is only valid together with the original test report. The product was completely tested on Oct. 18, 2012. We, SPORTON INTERNATIONAL (KUNSHAN) INC., would like to declare that the tested sample has been evaluated in accordance with the procedures and shown the compliance with the applicable technical standards.

The test results in this report apply exclusively to the tested model / sample. Without written approval of SPORTON INTERNATIONAL (KUNSHAN) INC., the test report shall not be reproduced except in full.

Reviewed by:

Jones Tsai

Jones Tsai / Manager

Testing Laboratory 1190

SPORTON INTERNATIONAL (KUNSHAN) INC.
No. 3-2, PingXiang Road, Kunshan, Jiangsu Province, P.R.C.

Table of Contents

1. Statement of Compliance **4**
2. Administration Data **5**
2.1 Testing Laboratory 5
2.2 Applicant 5
2.3 Manufacturer 5
2.4 Application Details 5
3. General Information **6**
3.1 Description of Equipment Under Test (EUT) 6
3.2 Product Photos 7
3.3 Applied Standard 7
3.4 Device Category and SAR Limits 7
3.5 Test Conditions 7
4. Specific Absorption Rate (SAR) **8**
4.1 Introduction 8
4.2 SAR Definition 8
5. SAR Measurement System **9**
5.1 E-Field Probe 10
5.2 Data Acquisition Electronics (DAE) 11
5.3 Robot 11
5.4 Measurement Server 11
5.5 Phantom 12
5.6 Device Holder 13
5.7 Data Storage and Evaluation 14
5.8 Test Equipment List 16
6. Tissue Simulating Liquids **17**
7. SAR Measurement Evaluation **19**
7.1 Purpose of System Performance check 19
7.2 System Setup 19
7.3 Validation Results 20
8. EUT Testing Position **21**
8.1 Define two imaginary lines on the handset 21
8.2 Cheek Position 22
8.3 Tilted Position 22
8.4 Body Worn Position 23
9. Measurement Procedures **24**
9.1 Spatial Peak SAR Evaluation 24
9.2 Area & Zoom Scan Procedures 24
9.3 Volume Scan Procedures 25
9.4 SAR Averaged Methods 25
9.5 Power Drift Monitoring 25
10. SAR Test Configurations **26**
10.1 Conducted RF Output Power (Unit: dBm) 26
11. SAR Test Results **28**
11.1 Test Records for Head SAR Test 28
11.2 Test Records for Hotspot SAR Test 28
11.3 Test Records for Body-worn SAR Test 29
11.4 Simultaneous Multi-band Transmission Analysis 30
12. Uncertainty Assessment **31**
13. References **33**
Appendix A. Plots of System Performance Check
Appendix B. Plots of SAR Measurement
Appendix C. DASY Calibration Certificate
Appendix D. Product Photos
Appendix E. Test Setup Photos
Appendix F. Product Equality Declaration

Revision History

REPORT NO.	VERSION	DESCRIPTION	ISSUED DATE
FA251502-04	Rev. 01	This is a variant report for ZTE N861. The product equality declaration could be referred to Appendix F. All the test cases were performed on the original test report which can be referred to Sporton Report Number FA251502. Based on the original test report, only the conducted power and the worse cases were verified for the differences.	Oct. 12, 2012
FA251502-04	Rev. 02	Update report for adding CDMA2000 BC1 test data for Body-worn and WLAN 2.4G test data for Hotspot.	Oct. 18, 2012

1. Statement of Compliance

The maximum results of Specific Absorption Rate (SAR) found during testing for **ZTE CORPORATION DUT: CDMA 1X-EVDO Digital Mobile Phone, Brand Name: ZTE, Model Name: ZTE N861** are as follows.

<Standalone SAR>

Band	Position	SAR_{1g} (W/kg)
CDMA2000 BC1	Head	0.848
WLAN 2.4G	Head	0.039
CDMA2000 BC1	Hotspot (1 cm)	1.170
WLAN 2.4G	Hotspot (1 cm)	0.039
CDMA2000 BC1	Body-worn (1 cm)	1.170
WLAN 2.4G	Body-worn (1 cm)	0.075

This device is in compliance with Specific Absorption Rate (SAR) for general population/uncontrolled exposure limits (1.6 W/kg) specified in FCC 47 CFR part 2 (2.1093) and ANSI/IEEE C95.1-1992, and had been tested in accordance with the measurement methods and procedures specified in IEEE 1528-2003 and FCC OET Bulletin 65 Supplement C (Edition 01-01).

2. Administration Data

2.1 Testing Laboratory

Test Site	SPORTON INTERNATIONAL (KUNSHAN) INC.
Test Site Location	No. 3-2, PingXiang Road, Kunshan, Jiangsu Province, P.R.C. TEL: +86-0512-5790-0158 FAX: +86-0512-5790-0958

2.2 Applicant

Company Name	ZTE CORPORATION
Address	ZTE Plaza, Keji Road South, Hi-Tech, Industrial Park, Nanshan District, Shenzhen, Guangdong, 518057, P.R.China

2.3 Manufacturer

Company Name	ZTE CORPORATION
Address	ZTE Plaza, Keji Road South, Hi-Tech, Industrial Park, Nanshan District, Shenzhen, Guangdong, 518057, P.R.China

2.4 Application Details

Date of Start during the Test	Sep. 20, 2012
Date of End during the Test	Oct. 18, 2012

3. General Information

3.1 Description of Equipment Under Test (EUT)

Product Feature & Specification	
EUT	CDMA 1X-EVDO Digital Mobile Phone
Brand Name	ZTE
Model Name	ZTE N861
FCC ID	Q78-ZTEN861
Tx Frequency	CDMA2000 BC1 : 1851.25 MHz ~ 1908.75 MHz WLAN2.4G: 2412 MHz ~ 2462 MHz Bluetooth : 2402 MHz ~ 2480 MHz
Rx Frequency	CDMA2000 BC1 : 1931.25 MHz ~ 1988.75 MHz WLAN2.4G: 2412 MHz ~ 2462 MHz Bluetooth : 2402 MHz ~ 2480 MHz
Maximum Average Output Power to Antenna	CDMA2000 BC1 : 23.87 dBm 802.11b : 14.68 dBm 802.11g : 11.22 dBm 802.11n-HT20 (2.4GHz) : 11.20 dBm Bluetooth: 0.79 dBm
Antenna Type	WWAN: PIFA Antenna WLAN: PIFA Antenna Bluetooth: PIFA Antenna
HW Version	c7xB
SW Version	N861V1.0.0B05
Type of Modulation	CDMA2000 1xRTT: QPSK CDMA2000 1xEV-DO: 8PSK 802.11b : DSSS (BPSK / QPSK / CCK) 802.11g/n : OFDM (BPSK / QPSK / 16QAM / 64QAM) Bluetooth V2.1 : GFSK Bluetooth V2.1 EDR : π/4-DQPSK, 8-DPSK Bluetooth V4.0 LE : GFSK
EUT Stage	Identical Prototype
Remark: The above EUT's information was declared by manufacturer. Please refer to the specifications or user's manual for more detailed description.	

3.2 Product Photos

Please refer to Appendix D.

3.3 Applied Standard

The Specific Absorption Rate (SAR) testing specification, method and procedure for this device is in accordance with the following standards:

- FCC 47 CFR Part 2 (2.1093)
- ANSI/IEEE C95.1-1992
- IEEE 1528-2003
- FCC OET Bulletin 65 Supplement C (Edition 01-01)
- FCC KDB 447498 D01 v04
- FCC KDB 648474 D01 v01r05
- FCC KDB 941225 D01 v02
- FCC KDB 941225 D06 v01
- FCC KDB 248227 D01 v01r02

3.4 Device Category and SAR Limits

This device belongs to portable device category because its radiating structure is allowed to be used within 20 centimeters of the body of the user. Limit for General Population/Uncontrolled exposure should be applied for this device, it is 1.6 W/kg as averaged over any 1 gram of tissue.

3.5 Test Conditions

3.5.1 Ambient Condition

Ambient Temperature	20 to 24 ℃
Humidity	< 60 %

3.5.2 Test Configuration

The device was controlled by using a base station emulator. Communication between the device and the emulator was established by air link. The distance between the EUT and the antenna of the emulator is larger than 50 cm and the output power radiated from the emulator antenna is at least 30 dB smaller than the output power of EUT. The EUT was set from the emulator to radiate maximum output power during all tests.

For WLAN SAR testing, WLAN engineering testing software installed on the EUT can provide continuous transmitting RF signal.

The maximum rated power of WWAN and WLAN is listed in "Tune-Up Procedure" exhibit; The scaling factor is calculated according to the difference between measured output power and maximum tolerance power on this device.

4. Specific Absorption Rate (SAR)

4.1 Introduction

SAR is related to the rate at which energy is absorbed per unit mass in an object exposed to a radio field. The SAR distribution in a biological body is complicated and is usually carried out by experimental techniques or numerical modeling. The standard recommends limits for two tiers of groups, occupational/controlled and general population/uncontrolled, based on a person's awareness and ability to exercise control over his or her exposure. In general, occupational/controlled exposure limits are higher than the limits for general population/uncontrolled.

4.2 SAR Definition

The SAR definition is the time derivative (rate) of the incremental energy (dW) absorbed by (dissipated in) an incremental mass (dm) contained in a volume element (dv) of a given density (ρ). The equation description is as below:

$$\mathbf{SAR} = \frac{\mathbf{d}}{\mathbf{dt}}\left(\frac{\mathbf{dW}}{\mathbf{dm}}\right) = \frac{\mathbf{d}}{\mathbf{dt}}\left(\frac{\mathbf{dW}}{\boldsymbol{\rho}\mathbf{dv}}\right)$$

SAR is expressed in units of Watts per kilogram (W/kg)

SAR measurement can be either related to the temperature elevation in tissue by

$$\mathbf{SAR} = \mathbf{C}\left(\frac{\boldsymbol{\delta}\mathbf{T}}{\boldsymbol{\delta}\mathbf{t}}\right)$$

Where: C is the specific heat capacity, δT is the temperature rise and δt is the exposure duration, or related to the electrical field in the tissue by

$$\mathbf{SAR} = \frac{\boldsymbol{\sigma}|\mathbf{E}|^2}{\boldsymbol{\rho}}$$

Where: σ is the conductivity of the tissue, ρ is the mass density of the tissue and E is the RMS electrical field strength.

However for evaluating SAR of low power transmitter, electrical field measurement is typically applied.

5. SAR Measurement System

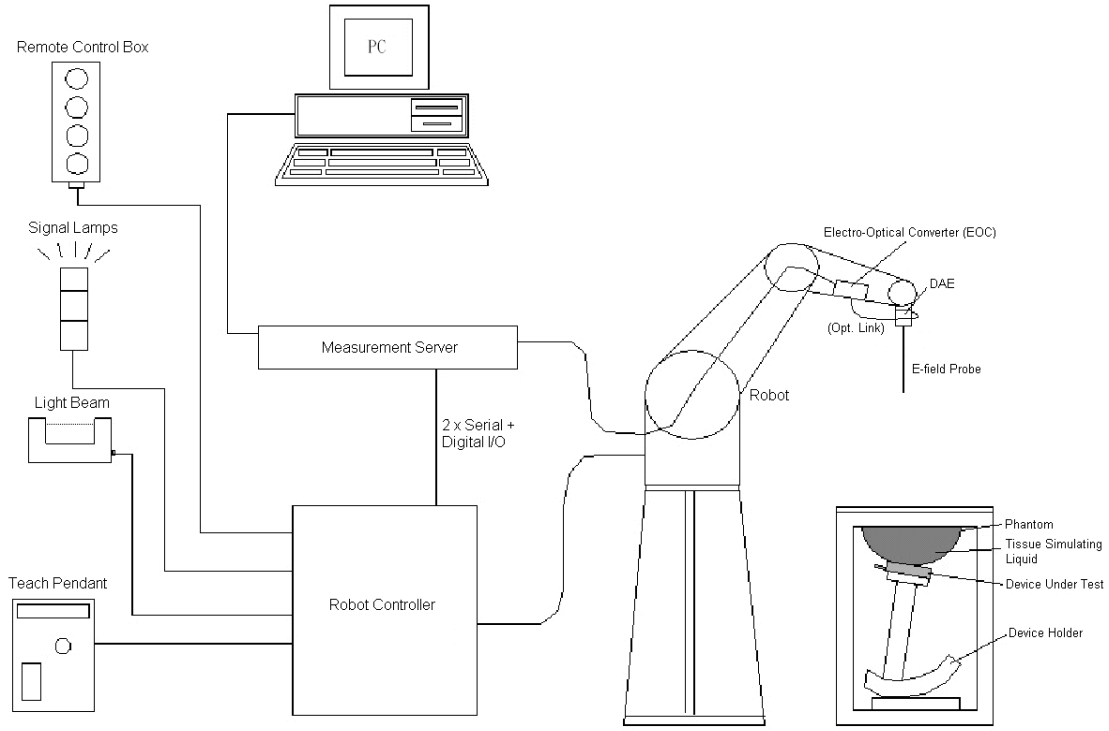

Fig 5.1 SPEAG DASY System Configurations

The DASY system for performance compliance tests is illustrated above graphically. This system consists of the following items:

- A standard high precision 6-axis robot with controller, a teach pendant and software
- A data acquisition electronic (DAE) attached to the robot arm extension
- A dosimetric probe equipped with an optical surface detector system
- The electro-optical converter (EOC) performs the conversion between optical and electrical signals
- A measurement server performs the time critical tasks such as signal filtering, control of the robot operation and fast movement interrupts.
- A probe alignment unit which improves the accuracy of the probe positioning
- A computer operating Windows XP
- DASY software
- Remove control with teach pendant and additional circuitry for robot safety such as warming lamps, etc.
- The SAM twin phantom
- A device holder
- Tissue simulating liquid
- Dipole for evaluating the proper functioning of the system

Component details are described in in the following sub-sections.

5.1 E-Field Probe

The SAR measurement is conducted with the dosimetric probe (manufactured by SPEAG).The probe is specially designed and calibrated for use in liquid with high permittivity. The dosimetric probe has special calibration in liquid at different frequency. This probe has a built in optical surface detection system to prevent from collision with phantom.

5.1.1 E-Field Probe Specification

<EX3DV4 Probe>

Construction	Symmetrical design with triangular core Built-in shielding against static charges PEEK enclosure material (resistant to organic solvents, e.g., DGBE)	 **Fig 5.2 Photo of EX3DV4**
Frequency	10 MHz to 6 GHz; Linearity: ± 0.2 dB	
Directivity	± 0.3 dB in HSL (rotation around probe axis) ± 0.5 dB in tissue material (rotation normal to probe axis)	
Dynamic Range	10 µW/g to 100 mW/g; Linearity: ± 0.2 dB (noise: typically < 1 µW/g)	
Dimensions	Overall length: 330 mm (Tip: 20 mm) Tip diameter: 2.5 mm (Body: 12 mm) Typical distance from probe tip to dipole centers: 1 mm	

5.1.2 E-Field Probe Calibration

Each probe needs to be calibrated according to a dosimetric assessment procedure with accuracy better than ± 10%. The spherical isotropy shall be evaluated and within ± 0.25 dB. The sensitivity parameters (NormX, NormY, and NormZ), the diode compression parameter (DCP) and the conversion factor (ConvF) of the probe are tested. The calibration data can be referred to appendix C of this report.

5.2 Data Acquisition Electronics (DAE)

The data acquisition electronics (DAE) consists of a highly sensitive electrometer-grade preamplifier with auto-zeroing, a channel and gain-switching multiplexer, a fast 16 bit AD-converter and a command decoder and control logic unit. Transmission to the measurement server is accomplished through an optical downlink for data and status information as well as an optical uplink for commands and the clock.
The input impedance of the DAE is 200 MOhm; the inputs are symmetrical and floating. Common mode rejection is above 80 dB.

Fig 5.3 Photo of DAE

5.3 Robot

The SPEAG DASY system uses the high precision robots (DASY5: TX90XL) type from Stäubli SA (France). For the 6-axis controller system, the robot controller version (DASY5: CS8c) from Stäubli is used. The Stäubli robot series have many features that are important for our application:

- High precision (repeatability ±0.035 mm)
- High reliability (industrial design)
- Jerk-free straight movements
- Low ELF interference (the closed metallic construction shields against motor control fields)

Fig 5.4 Photo of DASY5

5.4 Measurement Server

The measurement server is based on a PC/104 CPU board with CPU (DASY5: 400 MHz, Intel Celeron), chipdisk (DASY5: 128 MB), RAM (DASY5: 128 MB). The necessary circuits for communication with the DAE electronic box, as well as the 16 bit AD converter system for optical detection and digital I/O interface are contained on the DASY I/O board, which is directly connected to the PC/104 bus of the CPU board.

The measurement server performs all the real-time data evaluation for field measurements and surface detection, controls robot movements and handles safety operations.

Fig 5.5 Photo of Server for DASY5

5.5 Phantom

<SAM Twin Phantom>

Shell Thickness	2 ± 0.2 mm; Center ear point: 6 ± 0.2 mm
Filling Volume	Approx. 25 liters
Dimensions	Length: 1000 mm; Width: 500 mm; Height: adjustable feet
Measurement Areas	Left Hand, Right Hand, Flat Phantom

Fig 5.6 Photo of SAM Phantom

The bottom plate contains three pair of bolts for locking the device holder. The device holder positions are adjusted to the standard measurement positions in the three sections. A white cover is provided to tap the phantom during off-periods to prevent water evaporation and changes in the liquid parameters. On the phantom top, three reference markers are provided to identify the phantom position with respect to the robot.

<ELI4 Phantom>

Shell Thickness	2 ± 0.2 mm (sagging: <1%)
Filling Volume	Approx. 30 liters
Dimensions	Major ellipse axis: 600 mm Minor axis: 400 mm

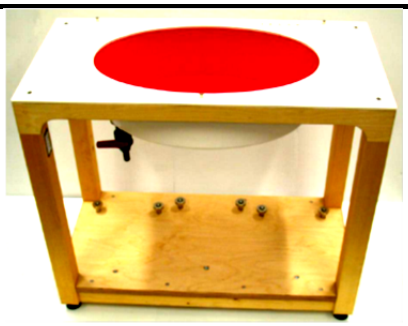

Fig 5.7 Photo of ELI4 Phantom

The ELI4 phantom is intended for compliance testing of handheld and body-mounted wireless devices in the frequency range of 30 MHz to 6 GHz. ELI4 is fully compatible with standard and all known tissue simulating liquids.

5.6 Device Holder

<Device Holder for SAM Twin Phantom>

The SAR in the phantom is approximately inversely proportional to the square of the distance between the source and the liquid surface. For a source at 5 mm distance, a positioning uncertainty of ± 0.5 mm would produce a SAR uncertainty of ± 20 %. Accurate device positioning is therefore crucial for accurate and repeatable measurements. The positions in which the devices must be measured are defined by the standards.

The DASY device holder is designed to cope with different positions given in the standard. It has two scales for the device rotation (with respect to the body axis) and the device inclination (with respect to the line between the ear reference points). The rotation center for both scales is the ear reference point (EPR). Thus the device needs no repositioning when changing the angles.

The DASY device holder is constructed of low-loss POM material having the following dielectric parameters: relative permittivity ε = 3 and loss tangent δ = 0.02. The amount of dielectric material has been reduced in the closest vicinity of the device, since measurements have suggested that the influence of the clamp on the test results could thus be lowered.

Fig 5.8 Device Holder

<Laptop Extension Kit>

The extension is lightweight and made of POM, acrylic glass and foam. It fits easily on the upper part of the mounting device in place of the phone positioned. The extension is fully compatible with the SAM Twin and ELI phantoms.

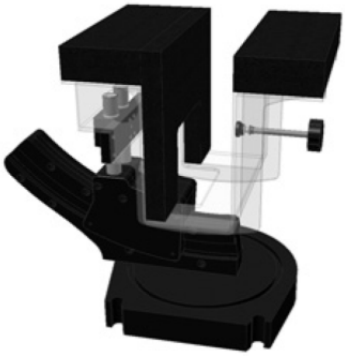

Fig 5.9 Laptop Extension Kit

5.7 Data Storage and Evaluation

5.7.1 Data Storage

The DASY software stores the assessed data from the data acquisition electronics as raw data (in microvolt readings from the probe sensors), together with all the necessary software parameters for the data evaluation (probe calibration data, liquid parameters and device frequency and modulation data) in measurement files. The post-processing software evaluates the desired unit and format for output each time the data is visualized or exported. This allows verification of the complete software setup even after the measurement and allows correction of erroneous parameter settings. For example, if a measurement has been performed with an incorrect crest factor parameter in the device setup, the parameter can be corrected afterwards and the data can be reevaluated.

The measured data can be visualized or exported in different units or formats, depending on the selected probe type (e.g., [V/m], [A/m], [mW/g]). Some of these units are not available in certain situations or give meaningless results, e.g., a SAR-output in a non-lose media, will always be zero. Raw data can also be exported to perform the evaluation with other software packages.

5.7.2 Data Evaluation

The DASY post-processing software (SEMCAD) automatically executes the following procedures to calculate the field units from the microvolt readings at the probe connector. The parameters used in the evaluation are stored in the configuration modules of the software：

Probe parameters：	- Sensitivity	$Norm_i$, a_{i0}, a_{i1}, a_{i2}
	- Conversion factor	$ConvF_i$
	- Diode compression point	dcp_i
Device parameters：	- Frequency	f
	- Crest factor	cf
Media parameters：	- Conductivity	σ
	- Density	ρ

These parameters must be set correctly in the software. They can be found in the component documents or they can be imported into the software from the configuration files issued for the DASY components. In the direct measuring mode of the multi-meter option, the parameters of the actual system setup are used. In the scan visualization and export modes, the parameters stored in the corresponding document files are used.

The first step of the evaluation is a linearization of the filtered input signal to account for the compression characteristics of the detector diode. The compensation depends on the input signal, the diode type and the DC-transmission factor from the diode to the evaluation electronics. If the exciting field is pulsed, the crest factor of the signal must be known to correctly compensate for peak power.

The formula for each channel can be given as：

$$\mathbf{V_i = U_i + U_i^2 \cdot \frac{cf}{dcp_i}}$$

with V_i = compensated signal of channel i, (i = x, y, z)
U_i = input signal of channel i, (i = x, y, z)
cf = crest factor of exciting field (DASY parameter)
dcp_i = diode compression point (DASY parameter)

From the compensated input signals, the primary field data for each channel can be evaluated：

E-field Probes：$\mathbf{E_i = \sqrt{\frac{V_i}{Norm_i \cdot ConvF}}}$

H-field Probes：$\mathbf{H_i = \sqrt{V_i} \cdot \frac{a_{i0}+a_{i1}f+a_{i2}f^2}{f}}$

with V_i = compensated signal of channel i, (i = x, y, z)
$Norm_i$ = sensor sensitivity of channel i, (i = x, y, z), μV/(V/m)^2 for E-field Probes
ConvF = sensitivity enhancement in solution
a_{ij} = sensor sensitivity factors for H-field probes
f = carrier frequency [GHz]
E_i = electric field strength of channel i in V/m
H_i = magnetic field strength of channel i in A/m

The RSS value of the field components gives the total field strength (Hermitian magnitude)：

$$\mathbf{E_{tot} = \sqrt{E_x^2 + E_y^2 + E_z^2}}$$

The primary field data are used to calculate the derived field units.

$$\mathbf{SAR = E_{tot}^2 \cdot \frac{\sigma}{\rho \cdot 1000}}$$

with SAR = local specific absorption rate in mW/g
E_{tot} = total field strength in V/m
σ = conductivity in [mho/m] or [Siemens/m]
ρ = equivalent tissue density in g/cm^3

Note that the density is set to 1, to account for actual head tissue density rather than the density of the tissue simulating liquid.

5.8 Test Equipment List

Manufacturer	Name of Equipment	Type/Model	Serial Number	Calibration	
				Last Cal.	Due Date
SPEAG	1900MHz System Validation Kit	D1900V2	5d118	Nov. 21, 2011	Nov. 20, 2012
SPEAG	2450MHz System Validation Kit	D2450V2	736	Jul. 25, 2011	Jul. 24, 2013
SPEAG	Data Acquisition Electronics	DAE4	1210	Nov. 18, 2011	Nov. 17, 2012
SPEAG	Dosimetric E-Field Probe	EX3DV4	3857	Jun. 20, 2012	Jun. 19, 2013
SPEAG	SAM Twin Phantom	QD 000 P40 CB	TP-1477	NCR	NCR
SPEAG	SAM Twin Phantom	QD 000 P40 CB	TP-1479	NCR	NCR
SPEAG	Phone Positioner	N/A	N/A	NCR	NCR
Anritsu	Radio communication analyzer	MT8820C	6201074235	Nov. 30, 2011	Nov. 29, 2013
Agilent	Wireless Communication Test Set	E5515C	GB47050646	Aug. 18, 2011	Aug. 17, 2013
Agilent	Wireless Communication Test Set	E5515C	MY48367160	Oct. 26, 2011	Oct. 25, 2013
Agilent	ENA Series Network Analyzer	E5071C	MY46111157	Apr. 13, 2012	Apr. 12, 2013
R&S	Signal Generator	SMR40	100455	Dec. 30, 2011	Dec. 29, 2012
Agilent	Power Meter	E4416A	MY45101555	Aug. 22, 2012	Aug. 21, 2013
Agilent	Power Sensor	E9327A	MY44421198	Aug. 22, 2012	Aug. 21, 2013
R&S	Spectrum Analyzer	FSP30	101399	Jun. 01, 2012	May 31, 2013

Table 5.1 Test Equipment List

Note:

1. The calibration certificate of DASY can be referred to appendix C of this report.
2. Referring to KDB 450824 D02, the dipole calibration interval can be extended to 3 years with justification. The dipoles are also not physically damaged, or repaired during the interval.
3. The justification data of dipole D2450V2, SN: 736, can be found in appendix C. The return loss is < -20dB, within 20% of prior calibration, the impedance is within 5 ohm of prior calibration.

6. Tissue Simulating Liquids

For the measurement of the field distribution inside the SAM phantom with DASY, the phantom must be filled with around 25 liters of homogeneous body tissue simulating liquid. For head SAR testing, the liquid height from the ear reference point (ERP) of the phantom to the liquid top surface is larger than 15 cm, which is shown in Fig. 6.1. For body SAR testing, the liquid height from the center of the flat phantom to the liquid top surface is larger than 15 cm, which is shown in Fig. 6.2.

Fig 6.1 Photo of Liquid Height for Head SAR

Fig 6.2 Photo of Liquid Height for Body SAR

The following table gives the recipes for tissue simulating liquid.

Frequency (MHz)	Water (%)	Sugar (%)	Cellulose (%)	Salt (%)	Preventol (%)	DGBE (%)	Conductivity (σ)	Permittivity (ε_r)
For Head								
1800, 1900, 2000	55.2	0	0	0.3	0	44.5	1.40	40.0
2450	55.0	0	0	0	0	45.0	1.80	39.2
For Body								
1800, 1900, 2000	70.2	0	0	0.4	0	29.4	1.52	53.3
2450	68.6	0	0	0	0	31.4	1.95	52.7

Table 6.1 Recipes of Tissue Simulating Liquid

The dielectric parameters of the liquids were verified prior to the SAR evaluation using an Agilent 85070D Dielectric Probe Kit and an Agilent Network Analyzer.

The following table shows the measuring results for simulating liquid.

Freq. (MHz)	Liquid Type	Temp. (℃)	Conductivity (σ)	Permittivity (ε_r)	Conductivity Target (σ)	Permittivity Target (ε_r)	Delta (σ) (%)	Delta (ε_r) (%)	Limit (%)	Date
1900	Head	21.5	1.412	39.311	1.4	40.0	0.86	-1.72	±5	Sep. 20, 2012
2450	Head	21.1	1.856	37.685	1.8	39.2	3.11	-3.86	±5	Sep. 20, 2012
1900	Body	21.6	1.512	53.903	1.52	53.3	-0.53	1.13	±5	Sep. 20, 2012
2450	Body	21.5	1.949	53.894	1.95	52.7	-0.05	2.27	±5	Sep. 20, 2012
1900	Body	21.5	1.531	54.671	1.52	53.3	0.72	2.57	±5	Oct. 18, 2012
2450	Body	21.3	1.976	54.13	1.95	52.7	1.33	2.71	±5	Oct. 18, 2012

Table 6.2 Measuring Results for Simulating Liquid

7. SAR Measurement Evaluation

Each DASY system is equipped with one or more system validation kits. These units, together with the predefined measurement procedures within the DASY software, enable the user to conduct the system performance check and system validation. System validation kit includes a dipole, tripod holder to fix it underneath the flat phantom and a corresponding distance holder.

7.1 Purpose of System Performance check

The system performance check verifies that the system operates within its specifications. System and operator errors can be detected and corrected. It is recommended that the system performance check be performed prior to any usage of the system in order to guarantee reproducible results. The system performance check uses normal SAR measurements in a simplified setup with a well characterized source. This setup was selected to give a high sensitivity to all parameters that might fail or vary over time. The system check does not intend to replace the calibration of the components, but indicates situations where the system uncertainty is exceeded due to drift or failure.

7.2 System Setup

In the simplified setup for system evaluation, the EUT is replaced by a calibrated dipole and the power source is replaced by a continuous wave that comes from a signal generator. The calibrated dipole must be placed beneath the flat phantom section of the SAM twin phantom with the correct distance holder. The distance holder should touch the phantom surface with a light pressure at the reference marking and be oriented parallel to the long side of the phantom. The equipment setup is shown below:

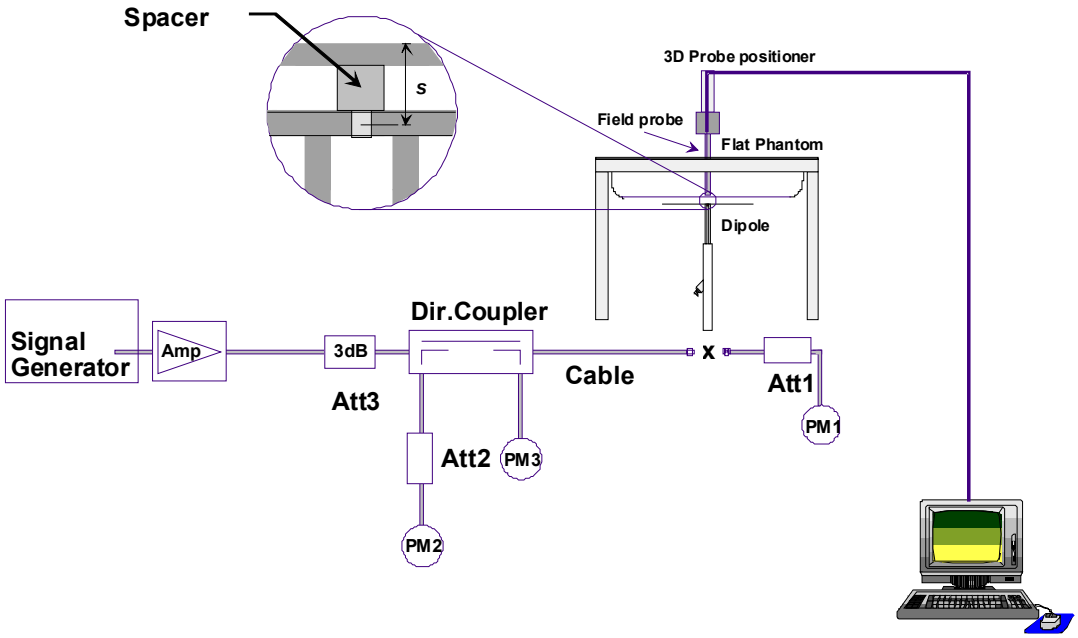

Fig 7.1 System Setup for System Evaluation

1. Signal Generator
2. Amplifier
3. Directional Coupler
4. Power Meter
5. Calibrated Dipole

The output power on dipole port must be calibrated to 24 dBm (250 mW) before dipole is connected.

Fig 7.2 Photo of Dipole Setup

7.3 Validation Results

Comparing to the original SAR value provided by SPEAG, the validation data should be within its specification of 10 %. Table 7.1 shows the target SAR and measured SAR after normalized to 1W input power. The table below indicates the system performance check can meet the variation criterion and the plots can be referred to Appendix A of this report.

Measurement Date	Frequency (MHz)	Liquid Type	Targeted SAR_{1g} (W/kg)	Measured SAR_{1g} (W/kg)	Normalized SAR_{1g} (W/kg)	Deviation (%)
Sep. 20, 2012	1900	Head	40.3	9.72	38.88	-3.52
Sep. 20, 2012	2450	Head	54.8	14.2	56.80	3.65
Sep. 20, 2012	1900	Body	41.8	9.98	39.92	-4.50
Sep. 20, 2012	2450	Body	52.3	12.7	50.80	-2.87
Oct. 18, 2012	1900	Body	41.8	10.1	40.40	-3.35
Oct. 18, 2012	2450	Body	52.3	12.9	51.60	-1.34

Table 7.1 Target and Measurement SAR after Normalized

8. EUT Testing Position

This EUT was tested in two different positions. They are left cheek and Back of the EUT with phantom 1 cm gap, as illustrated below:

8.1 Define two imaginary lines on the handset

(a) The vertical centerline passes through two points on the front side of the handset - the midpoint of the width w_t of the handset at the level of the acoustic output, and the midpoint of the width w_b of the bottom of the handset.

(b) The horizontal line is perpendicular to the vertical centerline and passes through the center of the acoustic output. The horizontal line is also tangential to the face of the handset at point A.

(c) The two lines intersect at point A. Note that for many handsets, point A coincides with the center of the acoustic output; however, the acoustic output may be located elsewhere on the horizontal line. Also note that the vertical centerline is not necessarily parallel to the front face of the handset, especially for clamshell handsets, handsets with flip covers, and other irregularly shaped handsets.

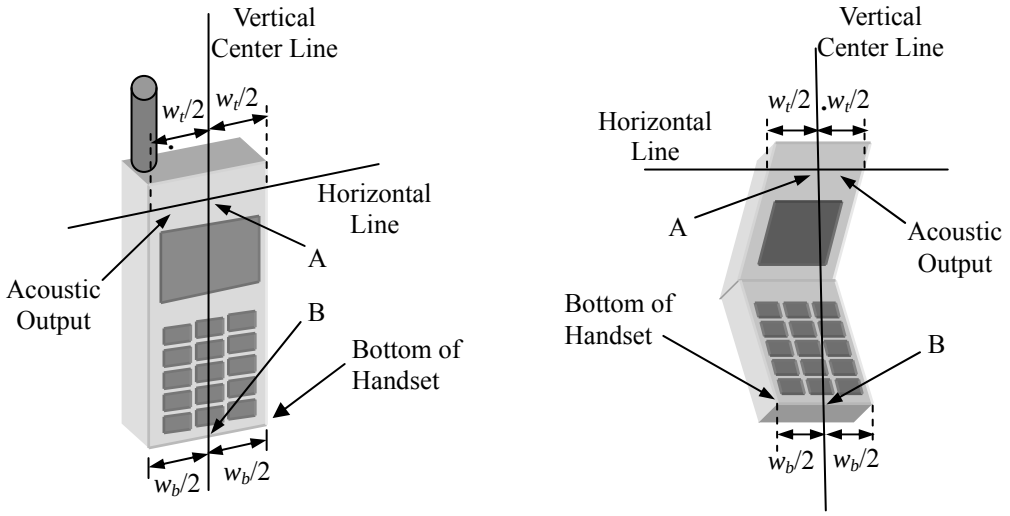

Fig 9.1 Illustration for Handset Vertical and Horizontal Reference Lines

8.2 Cheek Position

(a) To position the device with the vertical center line of the body of the device and the horizontal line crossing the center piece in a plane parallel to the sagittal plane of the phantom. While maintaining the device in this plane, align the vertical center line with the reference plane containing the three ear and mouth reference point (M: Mouth, RE: Right Ear, and LE: Left Ear) and align the center of the ear piece with the line RE-LE.

(b) To move the device towards the phantom with the ear piece aligned with the line LE-RE until the phone touched the ear. While maintaining the device in the reference plane and maintaining the phone contact with the ear, move the bottom of the phone until any point on the front side is in contact with the cheek of the phantom or until contact with the ear is lost (see Fig. 9.2).

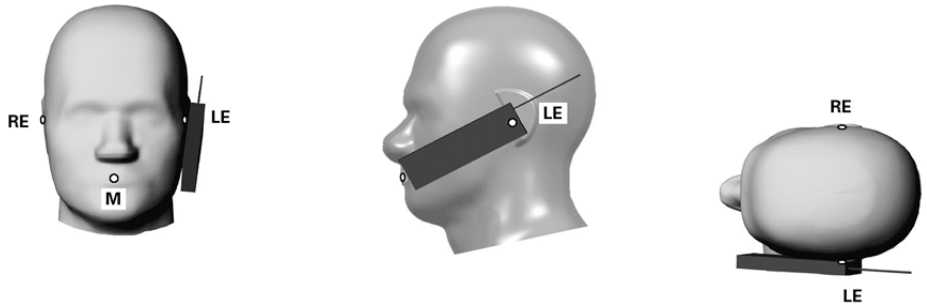

Fig 9.2 Illustration for Cheek Position

8.3 Tilted Position

(a) To position the device in the “cheek” position described above.

(b) While maintaining the device the reference plane described above and pivoting against the ear, moves it outward away from the mouth by an angle of 15 degrees or until contact with the ear is lost (see Fig. 9.3).

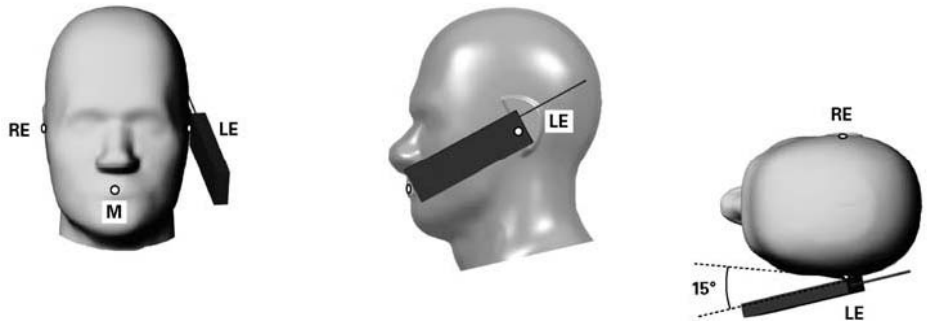

Fig 9.3 Illustration for Tilted Position

8.4 Body Worn Position

(a) To position the device parallel to the phantom surface with either keypad up or down.
(b) To adjust the device parallel to the flat phantom.
(c) To adjust the distance between the device surface and the flat phantom to 1 cm.

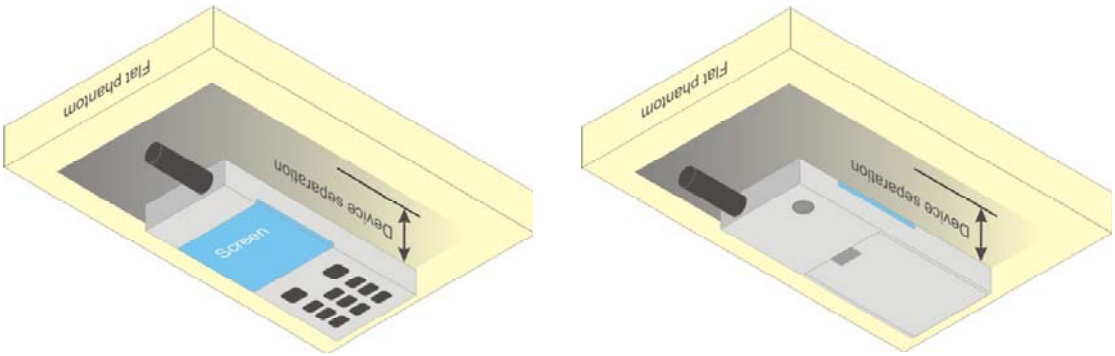

Fig 9.4 Illustration for Body Worn Position

<EUT Setup Photos>

Please refer to Appendix E for the test setup photos.

9. Measurement Procedures

The measurement procedures are as follows:

(a) Use base station simulator (if applicable) or engineering software to transmit RF power continuously (continuous Tx) in the highest power channel.
(b) Keep EUT to radiate maximum output power or 100% duty factor (if applicable)
(c) Measure output power through RF cable and power meter.
(d) Place the EUT in the positions as Appendix E demonstrates.
(e) Set scan area, grid size and other setting on the DASY software.
(f) Measure SAR results for the highest power channel on each testing position.
(g) Find out the largest SAR result on these testing positions of each band
(h) Measure SAR results for other channels in worst SAR testing position if the SAR of highest power channel is larger than 0.8 W/kg

According to the test standard, the recommended procedure for assessing the peak spatial-average SAR value consists of the following steps:

(a) Power reference measurement
(b) Area scan
(c) Zoom scan
(d) Power drift measurement

9.1 Spatial Peak SAR Evaluation

The procedure for spatial peak SAR evaluation has been implemented according to the test standard. It can be conducted for 1g and 10g, as well as for user-specific masses. The DASY software includes all numerical procedures necessary to evaluate the spatial peak SAR value.

The base for the evaluation is a "cube" measurement. The measured volume must include the 1g and 10g cubes with the highest averaged SAR values. For that purpose, the center of the measured volume is aligned to the interpolated peak SAR value of a previously performed area scan.

The entire evaluation of the spatial peak values is performed within the post-processing engine (SEMCAD). The system always gives the maximum values for the 1g and 10g cubes. The algorithm to find the cube with highest averaged SAR is divided into the following stages:

(a) Extraction of the measured data (grid and values) from the Zoom Scan
(b) Calculation of the SAR value at every measurement point based on all stored data (A/D values and measurement parameters)
(c) Generation of a high-resolution mesh within the measured volume
(d) Interpolation of all measured values form the measurement grid to the high-resolution grid
(e) Extrapolation of the entire 3-D field distribution to the phantom surface over the distance from sensor to surface
(f) Calculation of the averaged SAR within masses of 1g and 10g

9.2 Area & Zoom Scan Procedures

First Area Scan is used to locate the approximate location(s) of the local peak SAR value(s). The measurement grid within an Area Scan is defined by the grid extent, grid step size and grid offset. Next, in order to determine the EM field distribution in a three-dimensional spatial extension, Zoom Scan is required. The Zoom Scan measures 5x5x7 points with step size 8, 8 and 5 mm for 300 MHz to 3 GHz, and 8x8x8 points with step size 4, 4 and 2.5 mm for 3 GHz to 6 GHz. The Zoom Scan is performed around the highest E-field value to determine the averaged SAR-distribution over 10 g.

9.3 Volume Scan Procedures

The volume scan is used for assess overlapping SAR distributions for antennas transmitting in different frequency bands. It is equivalent to an oversized zoom scan used in standalone measurements. The measurement volume will be used to enclose all the simultaneous transmitting antennas. For antennas transmitting simultaneously in different frequency bands, the volume scan is measured separately in each frequency band. In order to sum correctly to compute the 1g aggregate SAR, the EUT remain in the same test position for all measurements and all volume scan use the same spatial resolution and grid spacing (step-size is 4, 4 and 2.5 mm). When all volume scan were completed, the software, SEMCAD postprocessor can combine and subsequently superpose these measurement data to calculating the multiband SAR.

9.4 SAR Averaged Methods

In DASY, the interpolation and extrapolation are both based on the modified Quadratic Shepard's method. The interpolation scheme combines a least-square fitted function method and a weighted average method which are the two basic types of computational interpolation and approximation.

Extrapolation routines are used to obtain SAR values between the lowest measurement points and the inner phantom surface. The extrapolation distance is determined by the surface detection distance and the probe sensor offset. The uncertainty increases with the extrapolation distance. To keep the uncertainty within 1% for the 1 g and 10 g cubes, the extrapolation distance should not be larger than 5 mm.

9.5 Power Drift Monitoring

All SAR testing is under the EUT install full charged battery and transmit maximum output power. In DASY measurement software, the power reference measurement and power drift measurement procedures are used for monitoring the power drift of EUT during SAR test. Both these procedures measure the field at a specified reference position before and after the SAR testing. The software will calculate the field difference in dB. If the power drift more than 5%, the SAR will be retested.

10. SAR Test Configurations

10.1 Conducted RF Output Power (Unit: dBm)

<CDMA2000>

Band	CDMA2000 BC1		
Channel	25	600	1175
Frequency (MHz)	1851.25	1880.00	1908.75
1xRTT RC1+SO55	23.87	23.73	23.65
1xRTT RC3+SO55	23.84	23.72	23.58
1xRTT RC3+SO32(+ F-SCH)	23.86	23.69	23.58
1xRTT RC3+SO32(+SCH)	23.87	23.72	23.74
1xEVDO RTAP 9.6	23.78	23.69	23.71
1xEVDO RTAP 38.4	23.77	23.68	23.65
1xEVDO RTAP 153.6	23.76	23.66	23.70
1xEVDO RETAP 128	23.78	23.72	23.75
1xEVDO RETAP 512	23.76	23.72	23.74
1xEVDO RETAP 1024	23.80	23.70	23.71
1xEVDO RETAP 2048	23.81	23.68	23.67
1xEVDO RETAP 4096	23.82	23.69	23.63

<WLAN 2.4GHz>

Mode	Channel	Frequency (MHz)	Average power (dBm)			
			Data Rate (bps)			
			1M	2M	5.5M	11M
802.11b	CH 01	2412 MHz	14.33	14.37	14.41	14.31
	CH 06	2437 MHz	**14.68**	14.63	14.66	14.65
	CH 11	2462 MHz	14.53	14.47	14.40	14.56

Mode	Channel	Frequency (MHz)	Average power (dBm)							
			Data Rate (bps)							
			6M	9M	12M	18M	24M	36M	48M	54M
802.11g	CH 01	2412 MHz	10.95	10.90	10.99	10.94	11.02	11.18	11.11	11.54
	CH 06	2437 MHz	**11.22**	11.08	11.19	11.10	11.15	11.15	11.17	11.71
	CH 11	2462 MHz	11.02	11.09	11.07	11.07	11.16	11.25	11.33	11.60

Mode	Channel	Frequency (MHz)	Average power (dBm)							
			Data Rate (bps)							
			MCS0	MCS1	MCS2	MCS3	MCS4	MCS5	MCS6	MCS7
802.11n HT20	CH 01	2412 MHz	10.76	10.85	10.98	11.02	11.00	10.96	11.03	11.01
	CH 06	2437 MHz	**11.20**	11.04	11.11	10.90	11.06	11.17	11.01	11.14
	CH 11	2462 MHz	10.93	10.84	11.02	11.00	11.12	11.08	11.15	11.16

Note:

1. Per 2010/10 TCB workshop and KDB 248227, choose the highest output power channel to test SAR and determine further SAR exclusion
2. Per KDB 248227, 11g and 11n-HT20 output power is less than 1/4 dB higher than 11b mode, thus the SAR can be excluded.

<Bluetooth>

Mode	Channel	Frequency (MHz)	Average Power (dBm)								
			Data Rate								
			DH1	DH3	DH5	2DH1	2DH3	2DH5	3DH1	3DH3	3DH5
Bluetooth	CH 00	2402	-0.16	-0.18	-0.02	-2.47	-2.32	-2.45	-1.59	-1.69	-1.63
	CH 39	2441	**0.79**	0.69	0.74	-2.01	-1.56	-1.82	-1.68	-1.76	-1.62
	CH 78	2480	0.66	0.68	0.79	-1.87	-1.53	-1.74	-1.66	-1.52	-1.58

11. SAR Test Results

11.1 Test Records for Head SAR Test

<CDMA2000>

Plot No.	Band	Mode	Test Position	Ch.	Output Power (dBm)	Tune-Up Limit (dBm)	Scaling Factor	SAR_{1g} (W/kg)	Scaled SAR_{1g} (W/kg)
1	CDMA2000 BC1	RC3 SO55	Left Cheek	25	23.94	24.5	1.138	0.834	0.949
2	**CDMA2000 BC1**	**RC3 SO55**	**Left Cheek**	**600**	**23.75**	**24.5**	**1.189**	**0.848**	**1.008**
3	CDMA2000 BC1	RC3 SO55	Left Cheek	1175	23.36	24.5	1.300	0.791	1.028

Note: Per KDB 447498, if the highest output channel SAR for each exposure position ≤ 0.8 W/kg other channels SAR tests are not necessary.

<WLAN 2.4GHz>

Plot No.	Band	Mode	Test Position	Ch.	Output Power (dBm)	Tune-Up Limit (dBm)	Scaling Factor	SAR_{1g} (W/kg)	Scaled SAR_{1g} (W/kg)
4	**WLAN2.4G**	**802.11b**	**Left Cheek**	**6**	**14.68**	**15**	**1.076**	**0.039**	**0.042**

Note: Per KDB 248227, if the highest output channel SAR for each exposure position ≤ 0.8 W/kg other channels SAR tests are not necessary.

11.2 Test Records for Hotspot SAR Test

<CDMA2000>

Plot No.	Band	Mode	Test Position	Gap (cm)	Ch.	Output Power (dBm)	Tune-Up Limit (dBm)	Scaling Factor	SAR_{1g} (W/kg)	Scaled SAR_{1g} (W/kg)
5	CDMA2000 BC1	RTAP153.6	Back	1	600	23.62	24.5	1.225	1.120	1.372
6	**CDMA2000 BC1**	**RTAP153.6**	**Back**	**1**	**25**	**23.94**	**24.5**	**1.138**	**1.170**	**1.331**
7	CDMA2000 BC1	RTAP153.6	Back	1	1175	23.35	24.5	1.303	1.050	1.368

Note: Per KDB 447498, if the highest output channel SAR for each exposure position ≤ 0.8 W/kg other channels SAR tests are not necessary.

<WLAN 2.4GHz>

Plot No.	Band	Mode	Test Position	Gap (cm)	Ch.	Output Power (dBm)	Tune-Up Limit (dBm)	Scaling Factor	SAR_{1g} (W/kg)	Scaled SAR_{1g} (W/kg)
12	**WLAN2.4G**	**802.11b**	**Back**	**1**	**6**	**14.68**	**15**	**1.076**	**0.039**	**0.042**

Note: Per KDB 248227, if the highest output channel SAR for each exposure position ≤ 0.8 W/kg other channels SAR tests are not necessary.

11.3 Test Records for Body-worn SAR Test

<CDMA2000>

Plot No.	Band	Mode	Test Position	Gap (cm)	Ch.	Output Power (dBm)	Tune-Up Limit (dBm)	Headset	Scaling Factor	SAR_{1g} (W/kg)	Scaled SAR_{1g} (W/kg)
9	CDMA2000 BC1	RC3+SO32	Back	1	25	23.86	24.5	v	1.159	1.120	1.298
10	**CDMA2000 BC1**	**RC3+SO32**	**Back**	**1**	**600**	**23.69**	**24.5**	**v**	**1.205**	**1.170**	**1.410**
11	CDMA2000 BC1	RC3+SO32	Back	1	1175	23.58	24.5	v	1.236	1.080	1.335

Note:

1. Per KDB 447498, if the highest output channel SAR for each exposure position ≤ 0.8 W/kg other channels SAR tests are not necessary.
2. "V" in the earphone column means the earphone is plugged during SAR testing.

<WLAN 2.4GHz>

Plot No.	Band	Mode	Test Position	Gap (cm)	Ch.	Output Power (dBm)	Tune-Up Limit (dBm)	Headset	Scaling Factor	SAR_{1g} (W/kg)	Scaled SAR_{1g} (W/kg)
12	WLAN2.4G	802.11b	Back	1	6	14.68	15	-	1.076	0.039	0.042
8	**WLAN2.4G**	**802.11b**	**Back**	**1**	**6**	**14.68**	**15**	**v**	**1.076**	**0.075**	**0.081**

Note:

1. KDB 248227, if the highest output channel SAR for each exposure position ≤ 0.8 W/kg other channels SAR tests are not necessary.
2. "V" in the earphone column means the earphone is plugged during SAR testing.

11.4 Simultaneous Multi-band Transmission Analysis

No.	Applicable Simultaneous Transmission Combination
1.	CDMA2000 + BT
2.	CDMA2000 + WLAN 2.4G

Note: WLAN and BT share the same antenna, and cannot transmit simultaneously.

<Head SAR>

	WWAN			WLAN		Max. SAR Summation
Position	WWAN Band	Plot No	Max. WWAN SAR (W/kg)	Plot No	Max. WLAN SAR (W/kg)	
Left Cheek	CDMA2000 BC1	#02	0.848	#4	0.039	**0.89**

<Hotspot SAR>

	WWAN			WLAN		Max. SAR Summation
Position	WWAN Band	Plot No	Max. WWAN SAR (W/kg)	Plot No	Max. WLAN SAR (W/kg)	
Back	CDMA2000 BC1	#06	1.17	#12	0.039	**1.21**

<Body-worn SAR>

	WWAN			WLAN		Max. SAR Summation
Position	WWAN Band	Plot No	Max. WWAN SAR (W/kg)	Plot No	Max. WLAN SAR (W/kg)	
Back	CDMA2000 BC1	#06	1.17	#12	0.039	**1.21**
Back (w/ Headset)	CDMA2000 BC1	#10	1.17	#08	0.075	**1.25**

Note:

1. The maximum SAR summation is calculated based on the same configuration and test position.
2. When stand-alone 1-g SAR is not required for a transmitter or antenna, its SAR is considered zero in the 1-g SAR summing process to determine simultaneous transmission SAR evaluation requirements
3. If 1g-SAR scalar summation < 1.6W/kg, simultaneous SAR measurement is not necessary.
4. If 1g-SAR summation > 1.6W/kg, SPLSR calculation is necessary.

Test Engineer : Fulu Hu and Jimmy Cheng

12. Uncertainty Assessment

The component of uncertainly may generally be categorized according to the methods used to evaluate them. The evaluation of uncertainly by the statistical analysis of a series of observations is termed a Type An evaluation of uncertainty. The evaluation of uncertainty by means other than the statistical analysis of a series of observation is termed a Type B evaluation of uncertainty. Each component of uncertainty, however evaluated, is represented by an estimated standard deviation, termed standard uncertainty, which is determined by the positive square root of the estimated variance.

A Type A evaluation of standard uncertainty may be based on any valid statistical method for treating data. This includes calculating the standard deviation of the mean of a series of independent observations; using the method of least squares to fit a curve to the data in order to estimate the parameter of the curve and their standard deviations; or carrying out an analysis of variance in order to identify and quantify random effects in certain kinds of measurement.

A type B evaluation of standard uncertainty is typically based on scientific judgment using all of the relevant information available. These may include previous measurement data, experience and knowledge of the behavior and properties of relevant materials and instruments, manufacture's specification, data provided in calibration reports and uncertainties assigned to reference data taken from handbooks. Broadly speaking, the uncertainty is either obtained from an outdoor source or obtained from an assumed distribution, such as the normal distribution, rectangular or triangular distributions indicated in Table 12.1

Uncertainty Distributions	Normal	Rectangular	Triangular	U-Shape
Multi-plying Factor[(a)]	1/k[(b)]	$1/\sqrt{3}$	$1/\sqrt{6}$	$1/\sqrt{2}$

(a) standard uncertainty is determined as the product of the multiplying factor and the estimated range of variations in the measured quantity

(b) κ is the coverage factor

Table 12.1 Standard Uncertainty for Assumed Distribution

The combined standard uncertainty of the measurement result represents the estimated standard deviation of the result. It is obtained by combining the individual standard uncertainties of both Type A and Type B evaluation using the usual "root-sum-squares" (RSS) methods of combining standard deviations by taking the positive square root of the estimated variances.

Expanded uncertainty is a measure of uncertainty that defines an interval about the measurement result within which the measured value is confidently believed to lie. It is obtained by multiplying the combined standard uncertainty by a coverage factor. Typically, the coverage factor ranges from 2 to 3. Using a coverage factor allows the true value of a measured quantity to be specified with a defined probability within the specified uncertainty range. For purpose of this document, a coverage factor two is used, which corresponds to confidence interval of about 95 %. The DASY uncertainty Budget is shown in the following tables.

Error Description	Uncertainty Value (±%)	Probability Distribution	Divisor	Ci (1g)	Ci (10g)	Standard Uncertainty (1g)	Standard Uncertainty (10g)
Measurement System							
Probe Calibration	6.0	Normal	1	1	1	± 6.0 %	± 6.0 %
Axial Isotropy	4.7	Rectangular	√3	0.7	0.7	± 1.9 %	± 1.9 %
Hemispherical Isotropy	9.6	Rectangular	√3	0.7	0.7	± 3.9 %	± 3.9 %
Boundary Effects	1.0	Rectangular	√3	1	1	± 0.6 %	± 0.6 %
Linearity	4.7	Rectangular	√3	1	1	± 2.7 %	± 2.7 %
System Detection Limits	1.0	Rectangular	√3	1	1	± 0.6 %	± 0.6 %
Readout Electronics	0.3	Normal	1	1	1	± 0.3 %	± 0.3 %
Response Time	0.8	Rectangular	√3	1	1	± 0.5 %	± 0.5 %
Integration Time	2.6	Rectangular	√3	1	1	± 1.5 %	± 1.5 %
RF Ambient Noise	3.0	Rectangular	√3	1	1	± 1.7 %	± 1.7 %
RF Ambient Reflections	3.0	Rectangular	√3	1	1	± 1.7 %	± 1.7 %
Probe Positioner	0.4	Rectangular	√3	1	1	± 0.2 %	± 0.2 %
Probe Positioning	2.9	Rectangular	√3	1	1	± 1.7 %	± 1.7 %
Max. SAR Eval.	1.0	Rectangular	√3	1	1	± 0.6 %	± 0.6 %
Test Sample Related							
Device Positioning	2.9	Normal	1	1	1	± 2.9 %	± 2.9 %
Device Holder	3.6	Normal	1	1	1	± 3.6 %	± 3.6 %
Power Drift	5.0	Rectangular	√3	1	1	± 2.9 %	± 2.9 %
Phantom and Setup							
Phantom Uncertainty	4.0	Rectangular	√3	1	1	± 2.3 %	± 2.3 %
Liquid Conductivity (Target)	5.0	Rectangular	√3	0.64	0.43	± 1.8 %	± 1.2 %
Liquid Conductivity (Meas.)	2.5	Normal	1	0.64	0.43	± 1.6 %	± 1.1 %
Liquid Permittivity (Target)	5.0	Rectangular	√3	0.6	0.49	± 1.7 %	± 1.4 %
Liquid Permittivity (Meas.)	2.5	Normal	1	0.6	0.49	± 1.5 %	± 1.2 %
Combined Standard Uncertainty						± 11.0 %	± 10.8 %
Coverage Factor for 95 %						K=2	
Expanded Uncertainty						**± 22.0 %**	**± 21.5 %**

Table 12.2 Uncertainty Budget of DASY for frequency range 300 MHz to 3 GHz

13. References

[1] FCC 47 CFR Part 2 “Frequency Allocations and Radio Treaty Matters; General Rules and Regulations”

[2] ANSI/IEEE Std. C95.1-1992, “IEEE Standard for Safety Levels with Respect to Human Exposure to Radio Frequency Electromagnetic Fields, 3 kHz to 300 GHz”, September 1992

[3] IEEE Std. 1528-2003, “Recommended Practice for Determining the Peak Spatial-Average Specific Absorption Rate (SAR) in the Human Head from Wireless Communications Devices: Measurement Techniques”, December 2003

[4] FCC OET Bulletin 65 (Edition 97-01) Supplement C (Edition 01-01), “Evaluating Compliance with FCC Guidelines for Human Exposure to Radiofrequency Electromagnetic Fields”, June 2001

[5] SPEAG DASY System Handbook

[6] FCC KDB 248227 D01 v01r02, “SAR Measurement Procedures for 802.11 a/b/g Transmitters”, May 2007

[7] FCC KDB 447498 D01 v04, “Mobile and Portable Device RF Exposure Procedures and Equipment Authorization Policies”, November 2009

[8] FCC KDB 447498 D02 v02, “SAR Measurement Procedures for USB Dongle Transmitters”, November 2009

[9] FCC KDB 616217 D01 v01r01, “SAR Evaluation Considerations for Laptop Computers with Antennas Built-in on Display Screens”, November 2009

[10] FCC KDB 616217 D03 v01, “SAR Evaluation Considerations for Laptop/Notebook/Netbook and Tablet Computers”, November 2009

[11] FCC KDB 648474 D01 v01r05, “SAR Evaluation Considerations for Handsets with Multiple Transmitters and Antennas”, September 2008

[12] FCC KDB 941225 D01 v02, “SAR Measurement Procedures for 3G Devices – CDMA 2000 / Ev-Do / WCDMA / HSDPA / HSPA”, October 2007

[13] FCC KDB 941225 D02 v02 "3GPP R6 HSPA and R7 HSPA+ SAR Guidance", December 2009.

[14] FCC KDB 941225 D03 v01, “Recommended SAR Test Reduction Procedures for GSM / GPRS / EDGE”, December 2008

[15] FCC KDB 941225 D04 v01, “Evaluating SAR for GSM/(E)GPRS Dual Transfer Mode”, January 27 2010

[16] FCC KDB 941225 D05 v01, “SAR Test Considerations for LTE Handsets and Data Modems”, December 15 2010

[17] FCC KDB 941225 D06 v01, "SAR Evaluation Procedures for Portable Devices with Wireless Router Capabilities", April 2011

[18] FCC KDB 388624 D02, "Permit But Ask List", December 2011

Appendix A. Plots of System Performance Check

The plots are shown as follows.

System Check_Head_1900MHz_120920

DUT: D1900V2 - SN:5d118

Communication System: CW; Frequency: 1900 MHz;Duty Cycle: 1:1
Medium: HSL_1900_120920 Medium parameters used: f = 1900 MHz; σ = 1.412 mho/m; ε_r = 39.311; ρ = 1000 kg/m^3
Ambient Temperature：23.0 ℃; Liquid Temperature：21.5 ℃

DASY5 Configuration:
- Probe: EX3DV4 - SN3857; ConvF(7.84, 7.84, 7.84); Calibrated: 2012-6-20
- Sensor-Surface: 4mm (Mechanical Surface Detection)
- Electronics: DAE4 Sn1210; Calibrated: 2011-11-18
- Phantom: SAM1; Type: SAM; Serial: TP-1479
- Measurement SW: DASY52, Version 52.8 (2); SEMCAD X Version 14.4.5 (3634)

Pin=250mW/Area Scan (91x91x1): Measurement grid: dx=10mm, dy=10mm
Maximum value of SAR (interpolated) = 11.024 mW/g

Pin=250mW/Zoom Scan (7x7x7)/Cube 0: Measurement grid: dx=5mm, dy=5mm, dz=5mm
Reference Value = 88.319 V/m; Power Drift = -0.10 dB
Peak SAR (extrapolated) = 18.419 W/kg
SAR(1 g) = 9.72 mW/g; SAR(10 g) = 5.05 mW/g
Maximum value of SAR (measured) = 10.903 mW/g

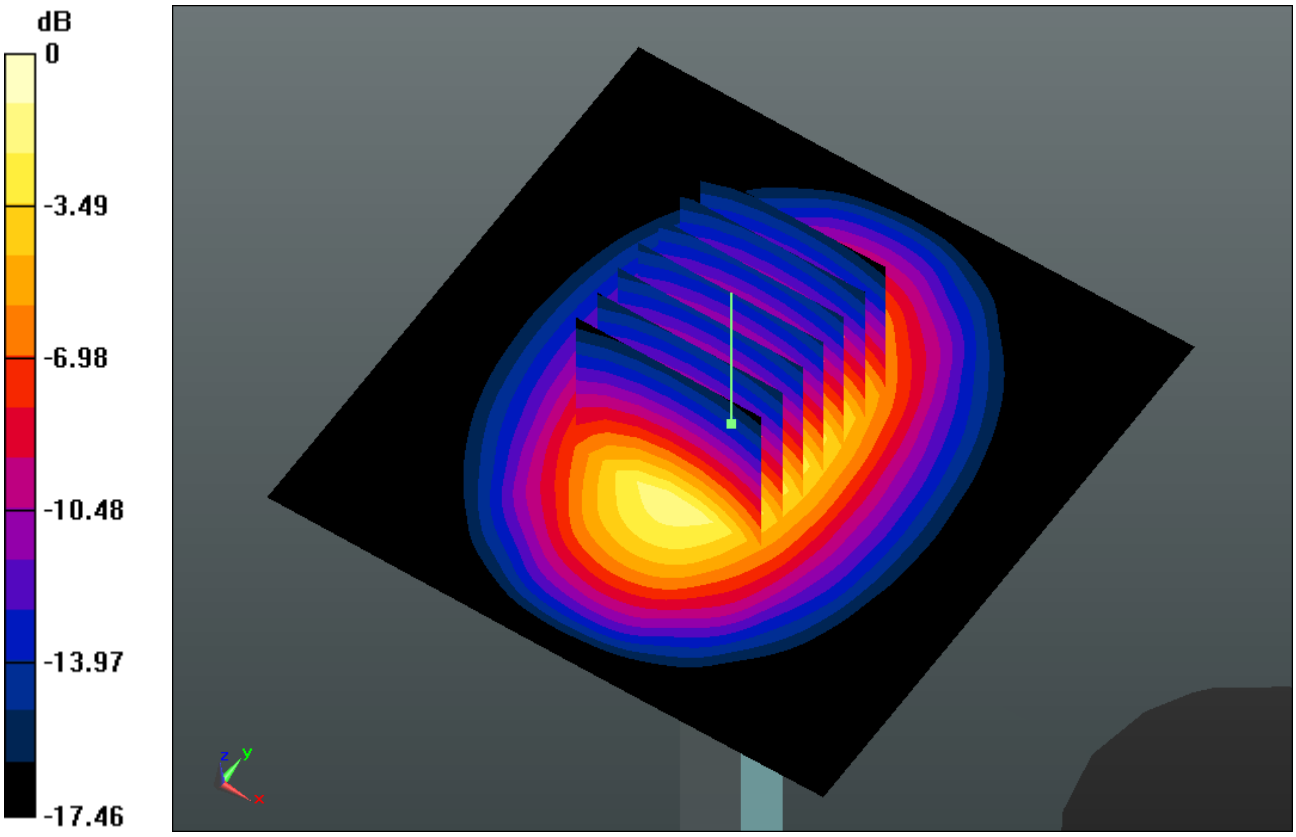

0 dB = 10.900mW/g

System Check_Head_2450MHz_120920

DUT: D2450V2 - SN:736

Communication System: CW; Frequency: 2450 MHz;Duty Cycle: 1:1
Medium: HSL_2450_120920 Medium parameters used: f = 2450 MHz; σ = 1.856 mho/m; ε_r = 37.685; ρ = 1000 kg/m^3
Ambient Temperature：23.1 ℃; Liquid Temperature：21.1 ℃

DASY5 Configuration:
- Probe: EX3DV4 - SN3857; ConvF(6.87, 6.87, 6.87); Calibrated: 2012-6-20
- Sensor-Surface: 4mm (Mechanical Surface Detection)
- Electronics: DAE4 Sn1210; Calibrated: 2011-11-18
- Phantom: SAM1; Type: SAM; Serial: TP-1479
- Measurement SW: DASY52, Version 52.8 (2); SEMCAD X Version 14.4.5 (3634)

Pin=250mW/Area Scan (61x61x1): Measurement grid: dx=15mm, dy=15mm
Maximum value of SAR (interpolated) = 16.002 mW/g

Pin=250mW/Zoom Scan (7x7x7)/Cube 0: Measurement grid: dx=5mm, dy=5mm, dz=5mm
Reference Value = 92.167 V/m; Power Drift = 0.12 dB
Peak SAR (extrapolated) = 30.980 W/kg
SAR(1 g) = 14.2 mW/g; SAR(10 g) = 6.44 mW/g
Maximum value of SAR (measured) = 16.078 mW/g

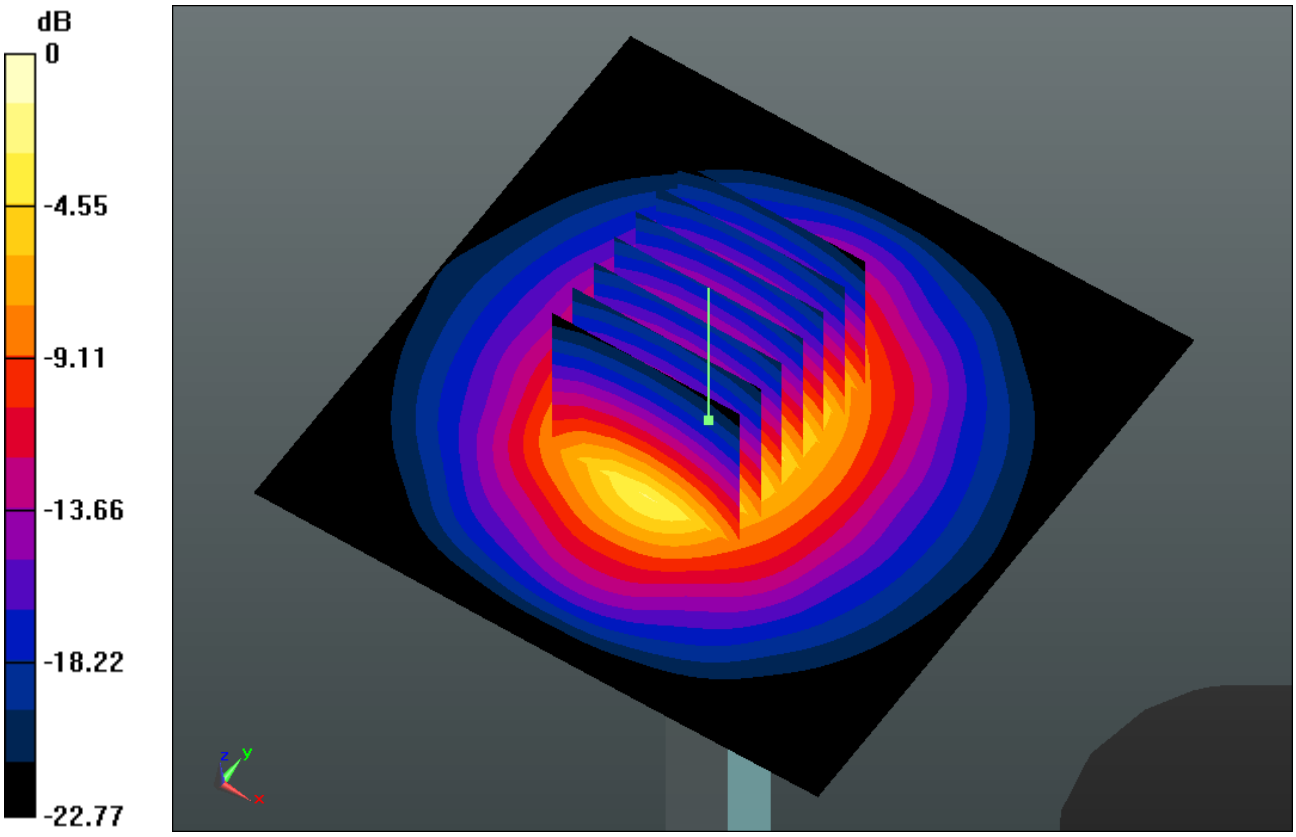

0 dB = 16.080mW/g

System Check_Body_1900MHz_120920

DUT: D1900V2 - SN:5d118

Communication System: CW; Frequency: 1900 MHz;Duty Cycle: 1:1
Medium: MSL_1900_120920 Medium parameters used: f = 1900 MHz; σ = 1.512 mho/m; ε_r = 53.903; ρ = 1000 kg/m^3
Ambient Temperature：23.4 ℃; Liquid Temperature：21.6 ℃

DASY5 Configuration:
- Probe: EX3DV4 - SN3857; ConvF(7.35, 7.35, 7.35); Calibrated: 2012-6-20
- Sensor-Surface: 4mm (Mechanical Surface Detection)
- Electronics: DAE4 Sn1210; Calibrated: 2011-11-18
- Phantom: SAM2; Type: SAM; Serial: TP-1477
- Measurement SW: DASY52, Version 52.8 (2); SEMCAD X Version 14.4.5 (3634)

Pin=250mW/Area Scan (61x61x1): Measurement grid: dx=15mm, dy=15mm
Maximum value of SAR (interpolated) = 11.341 mW/g

Pin=250mW/Zoom Scan (7x7x7)/Cube 0: Measurement grid: dx=5mm, dy=5mm, dz=5mm
Reference Value = 87.001 V/m; Power Drift = 0.03 dB
Peak SAR (extrapolated) = 18.324 W/kg
SAR(1 g) = 9.98 mW/g; SAR(10 g) = 5.13 mW/g
Maximum value of SAR (measured) = 11.234 mW/g

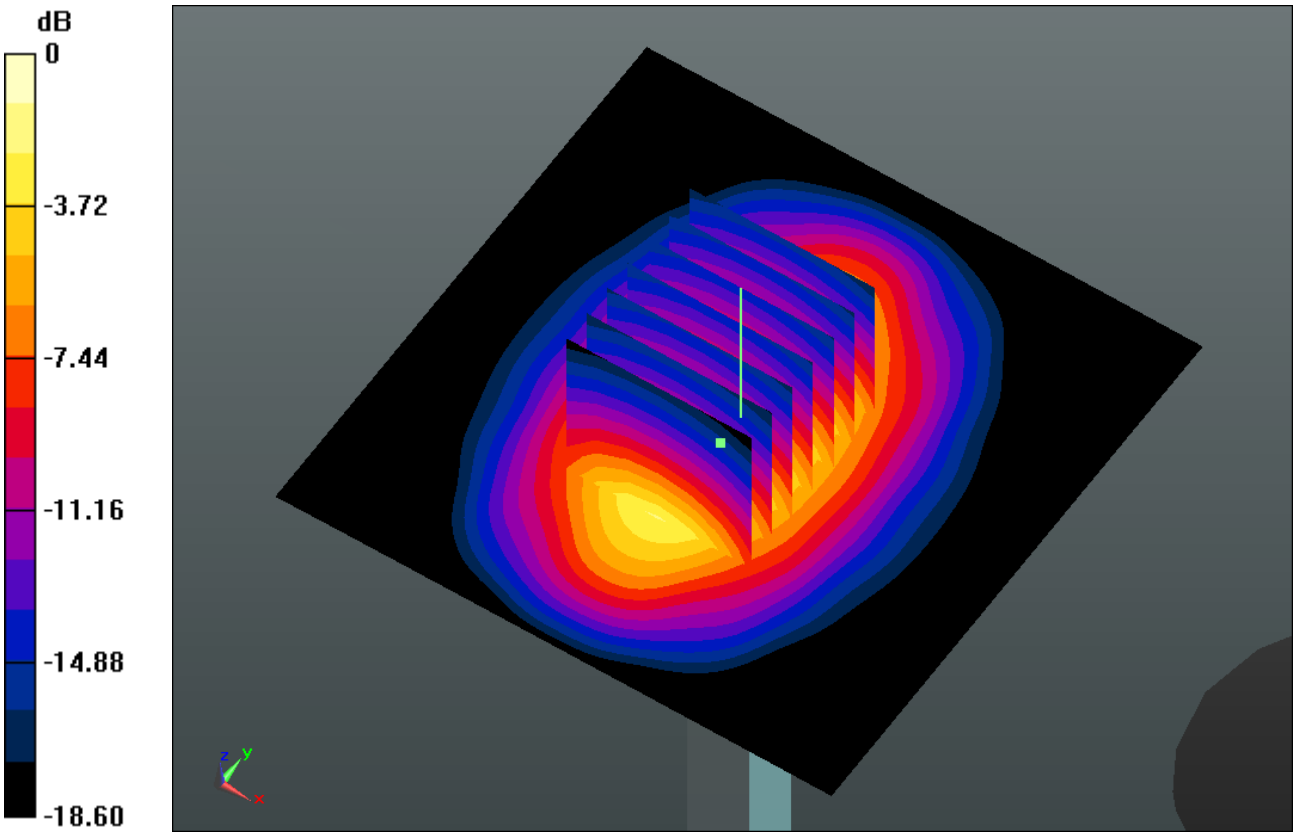

0 dB = 11.230mW/g

System Check_Body_2450MHz_120920

DUT: D2450V2 - SN:736

Communication System: CW; Frequency: 2450 MHz;Duty Cycle: 1:1
Medium: MSL_2450_120920 Medium parameters used: f = 2450 MHz; σ = 1.949 mho/m; ε_r = 53.894; ρ = 1000 kg/m^3
Ambient Temperature：23.4 ℃; Liquid Temperature：21.5 ℃

DASY5 Configuration:
- Probe: EX3DV4 - SN3857; ConvF(6.94, 6.94, 6.94); Calibrated: 2012-6-20
- Sensor-Surface: 4mm (Mechanical Surface Detection)
- Electronics: DAE4 Sn1210; Calibrated: 2011-11-18
- Phantom: SAM2; Type: SAM; Serial: TP-1477
- Measurement SW: DASY52, Version 52.8 (2); SEMCAD X Version 14.4.5 (3634)

Pin=250mW/Area Scan (61x61x1): Measurement grid: dx=15mm, dy=15mm
Maximum value of SAR (interpolated) = 14.579 mW/g

Pin=250mW/Zoom Scan (7x7x7)/Cube 0: Measurement grid: dx=5mm, dy=5mm, dz=5mm
Reference Value = 86.061 V/m; Power Drift = 0.03 dB
Peak SAR (extrapolated) = 26.910 W/kg
SAR(1 g) = 12.7 mW/g; SAR(10 g) = 5.82 mW/g
Maximum value of SAR (measured) = 14.554 mW/g

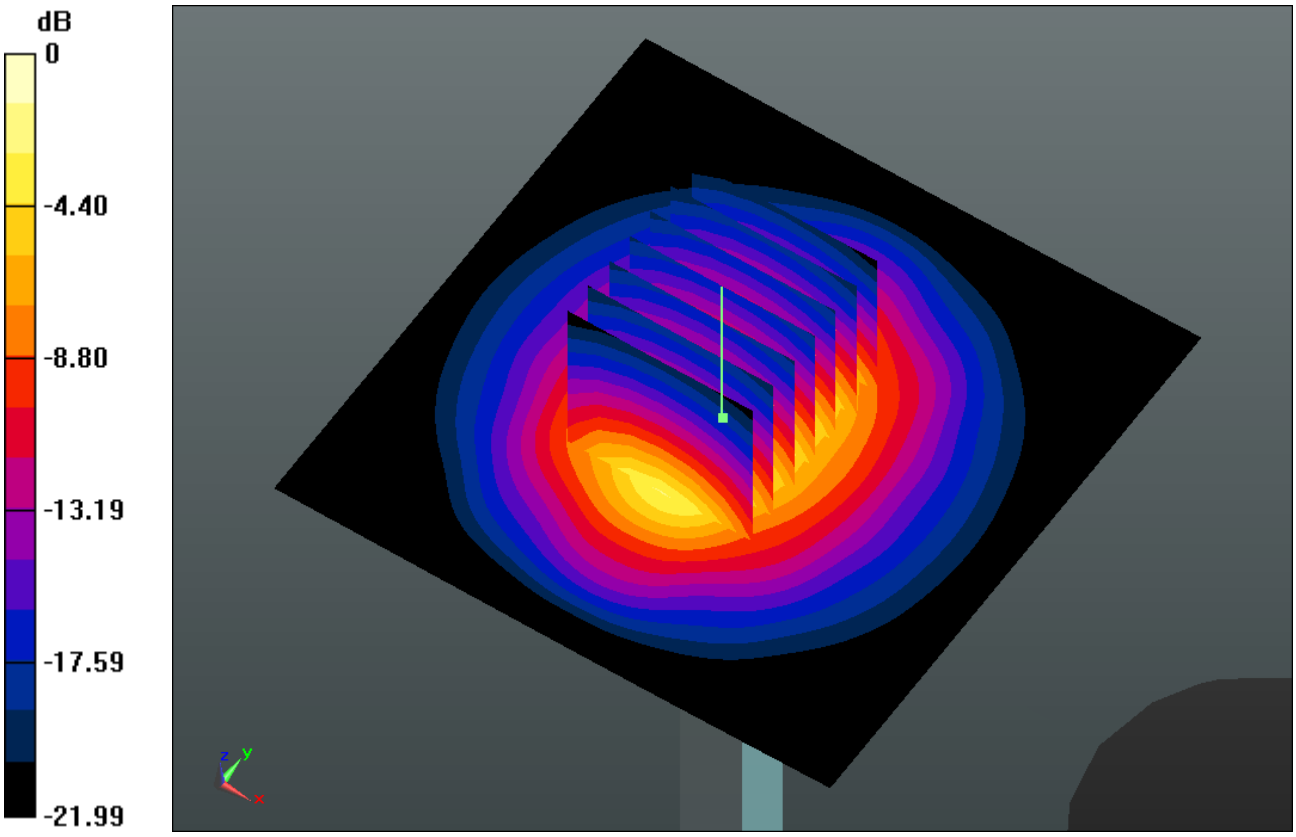

0 dB = 14.550mW/g

System Check_Body_1900MHz_121018

DUT: D1900V2 - SN:5d118

Communication System: CW; Frequency: 1900 MHz;Duty Cycle: 1:1
Medium: MSL_1900_121018 Medium parameters used: f = 1900 MHz; σ = 1.531 mho/m; ε_r = 54.671; ρ = 1000 kg/m^3
Ambient Temperature：23.3 ℃; Liquid Temperature：21.5 ℃

DASY5 Configuration:
- Probe: EX3DV4 - SN3857; ConvF(7.35, 7.35, 7.35); Calibrated: 2012-6-20
- Sensor-Surface: 4mm (Mechanical Surface Detection)
- Electronics: DAE4 Sn1210; Calibrated: 2011-11-18
- Phantom: SAM2; Type: SAM; Serial: TP-1477
- Measurement SW: DASY52, Version 52.8 (2); SEMCAD X Version 14.4.5 (3634)

Pin=250mW/Area Scan (61x61x1): Measurement grid: dx=15mm, dy=15mm
Maximum value of SAR (interpolated) = 11.480 mW/g

Pin=250mW/Zoom Scan (7x7x7)/Cube 0: Measurement grid: dx=5mm, dy=5mm, dz=5mm
Reference Value = 87.001 V/m; Power Drift = 0.03 dB
Peak SAR (extrapolated) = 18.549 W/kg
SAR(1 g) = 10.1 mW/g; SAR(10 g) = 5.19 mW/g
Maximum value of SAR (measured) = 11.372 mW/g

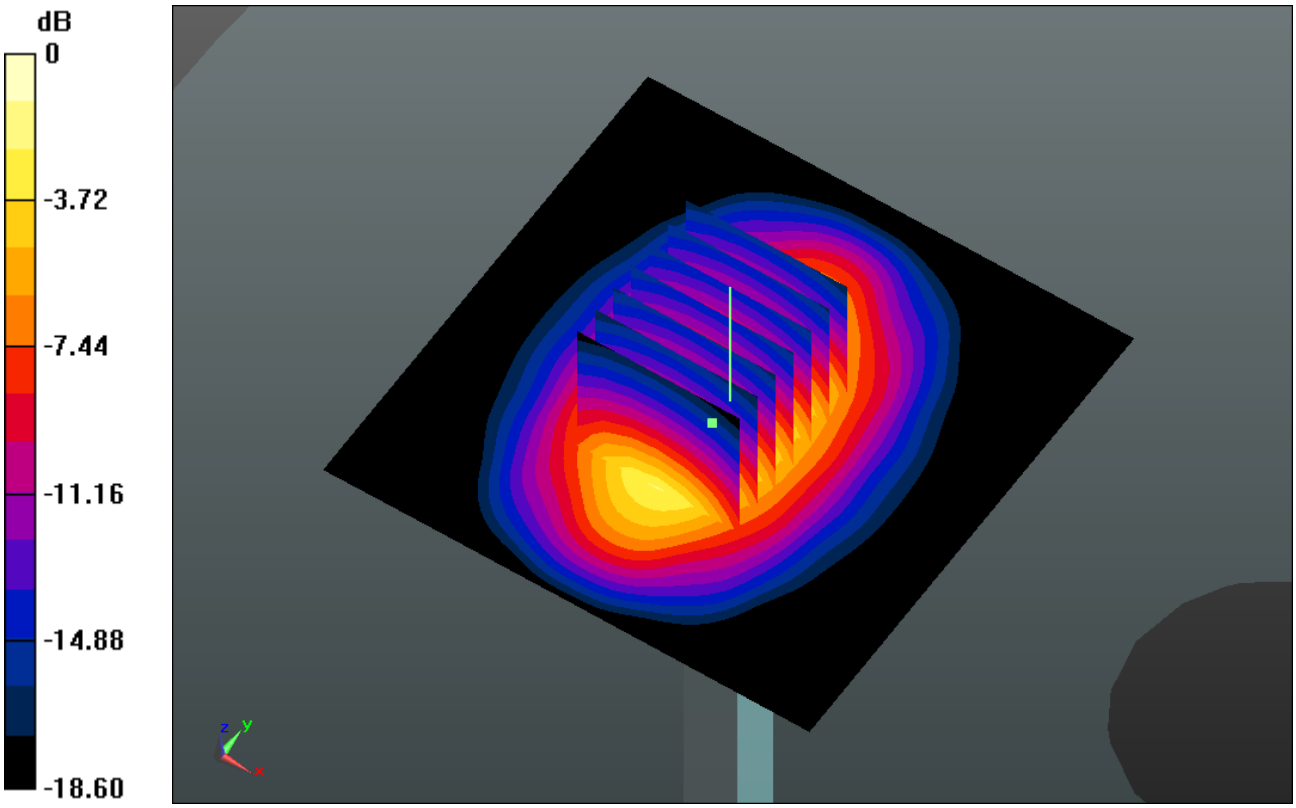

0 dB = 11.370mW/g

Test Laboratory: Sporton International Inc. SAR/HAC Testing Lab Date: 2012-10-18

System Check_Body_2450MHz_121018

DUT: D2450V2 - SN:736

Communication System: CW; Frequency: 2450 MHz;Duty Cycle: 1:1
Medium: MSL_2450_121018 Medium parameters used: f = 2450 MHz; σ = 1.976 mho/m; ε_r = 54.13; ρ = 1000 kg/m^3
Ambient Temperature：23.2 ℃; Liquid Temperature：21.3 ℃

DASY5 Configuration:
- Probe: EX3DV4 - SN3857; ConvF(6.94, 6.94, 6.94); Calibrated: 2012-6-20
- Sensor-Surface: 4mm (Mechanical Surface Detection)
- Electronics: DAE4 Sn1210; Calibrated: 2011-11-18
- Phantom: SAM1; Type: SAM; Serial: TP-1479
- Measurement SW: DASY52, Version 52.8 (2); SEMCAD X Version 14.4.5 (3634)

Pin=250mW/Area Scan (61x61x1): Measurement grid: dx=15mm, dy=15mm
Maximum value of SAR (interpolated) = 14.780 mW/g

Pin=250mW/Zoom Scan (7x7x7)/Cube 0: Measurement grid: dx=5mm, dy=5mm, dz=5mm
Reference Value = 86.061 V/m; Power Drift = 0.03 dB
Peak SAR (extrapolated) = 27.280 W/kg
SAR(1 g) = 12.9 mW/g; SAR(10 g) = 5.9 mW/g
Maximum value of SAR (measured) = 14.754 mW/g

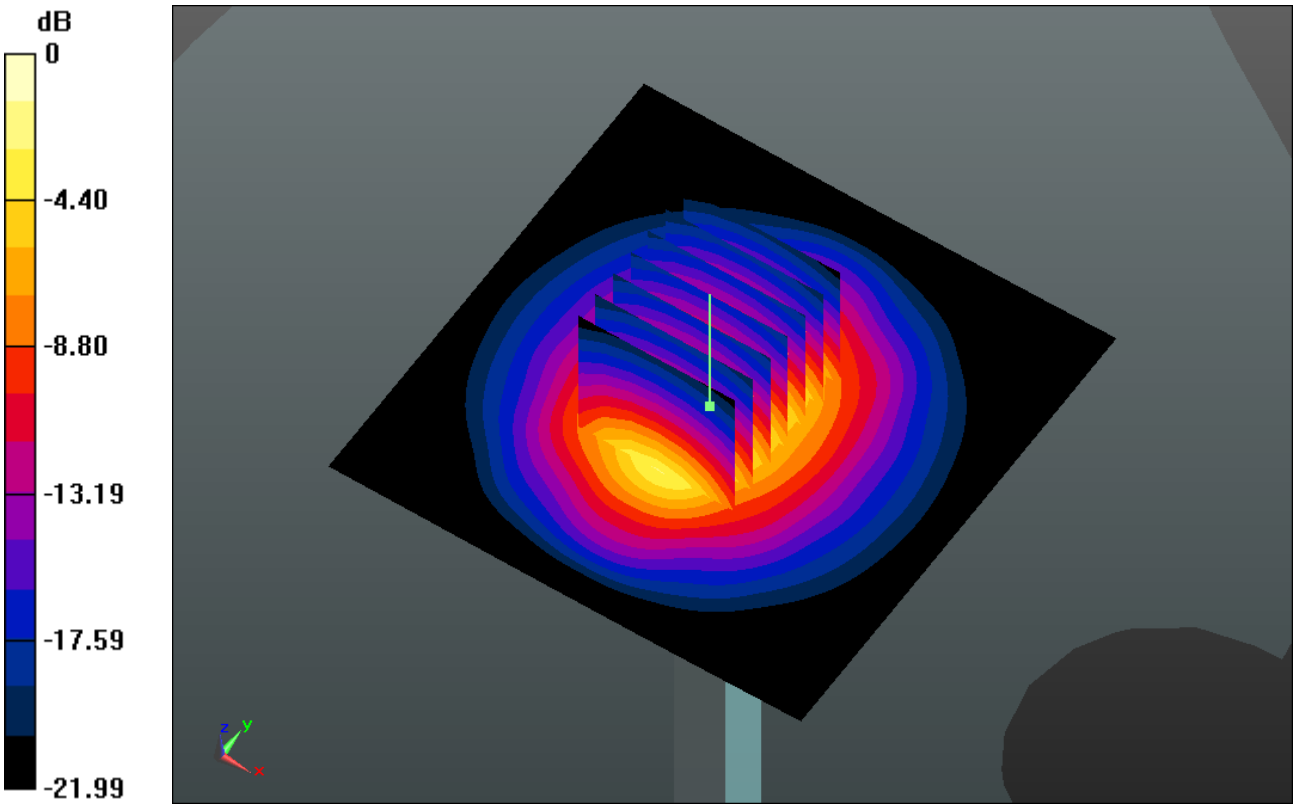

0 dB = 14.750mW/g

Appendix B. Plots of SAR Measurement

The plots are shown as follows.

#01 CDMA2000 BC1_RC3 SO55_Left Cheeek_Ch25

DUT: 251502-04

Communication System: CDMA2000; Frequency: 1851.25 MHz;Duty Cycle: 1:1
Medium: HSL_1900_120920 Medium parameters used: f = 1851.25 MHz; σ = 1.352 mho/m; ε_r = 39.384; ρ = 1000 kg/m^3
Ambient Temperature：23.0 ℃; Liquid Temperature：21.5 ℃

DASY5 Configuration:
- Probe: EX3DV4 - SN3857; ConvF(7.84, 7.84, 7.84); Calibrated: 2012-6-20
- Sensor-Surface: 4mm (Mechanical Surface Detection)
- Electronics: DAE4 Sn1210; Calibrated: 2011-11-18
- Phantom: SAM1; Type: SAM; Serial: TP-1479
- Measurement SW: DASY52, Version 52.8 (2); SEMCAD X Version 14.4.5 (3634)

Ch25/Area Scan (71x111x1): Measurement grid: dx=15mm, dy=15mm
Maximum value of SAR (interpolated) = 0.948 mW/g

Ch25/Zoom Scan (5x5x7)/Cube 0: Measurement grid: dx=8mm, dy=8mm, dz=5mm
Reference Value = 10.012 V/m; Power Drift = 0.03 dB
Peak SAR (extrapolated) = 1.315 W/kg
SAR(1 g) = 0.834 mW/g; SAR(10 g) = 0.498 mW/g
Maximum value of SAR (measured) = 0.912 mW/g

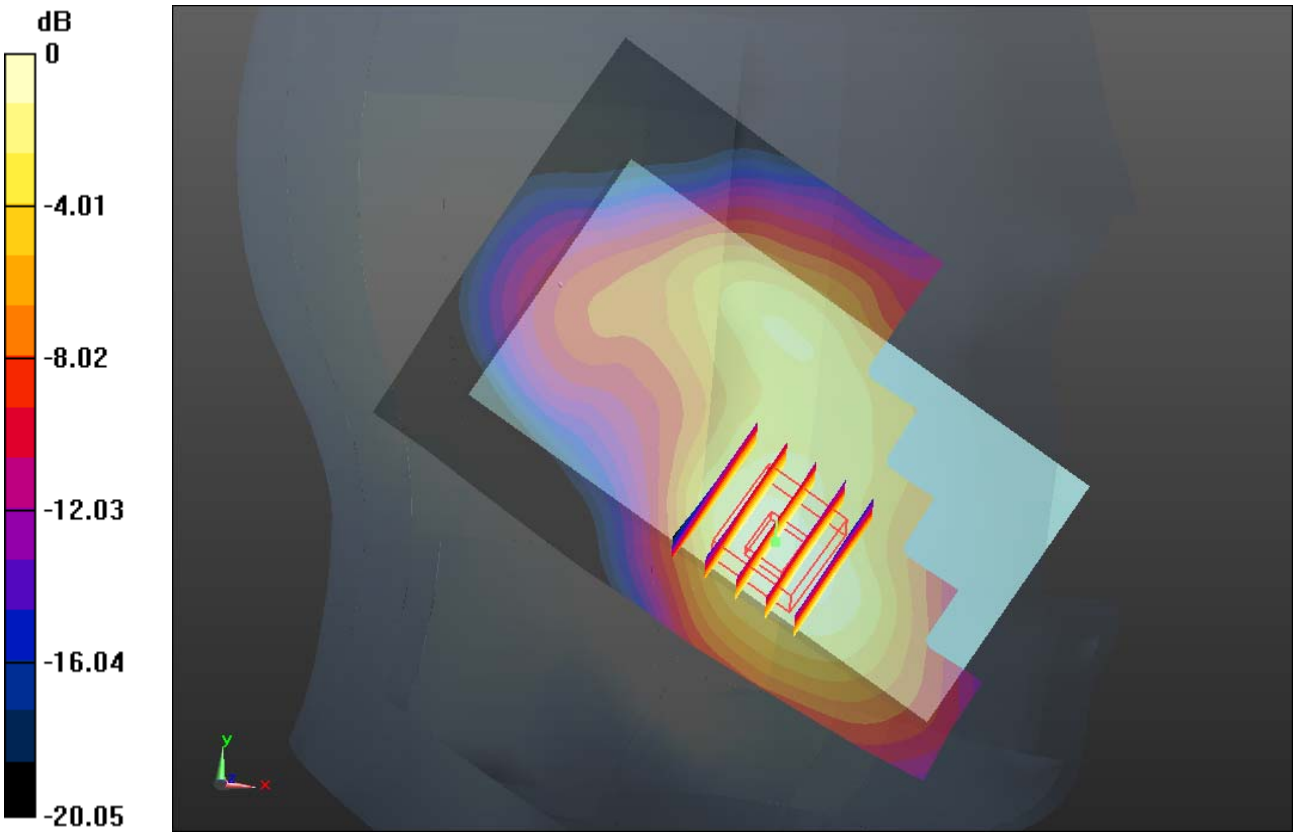

0 dB = 0.910mW/g

#02 CDMA2000 BC1_RC3 SO55_Left Cheeek_Ch600

DUT: 251502-04

Communication System: CDMA2000; Frequency: 1880 MHz;Duty Cycle: 1:1
Medium: HSL_1900_120920 Medium parameters used: f = 1880 MHz; σ = 1.387 mho/m; ε_r = 39.308; ρ = 1000 kg/m^3
Ambient Temperature：23.0 ℃; Liquid Temperature：21.5 ℃

DASY5 Configuration:
- Probe: EX3DV4 - SN3857; ConvF(7.84, 7.84, 7.84); Calibrated: 2012-6-20
- Sensor-Surface: 4mm (Mechanical Surface Detection)
- Electronics: DAE4 Sn1210; Calibrated: 2011-11-18
- Phantom: SAM1; Type: SAM; Serial: TP-1479
- Measurement SW: DASY52, Version 52.8 (2); SEMCAD X Version 14.4.5 (3634)

Ch600/Area Scan (71x111x1): Measurement grid: dx=15mm, dy=15mm
Maximum value of SAR (interpolated) = 0.953 mW/g

Ch600/Zoom Scan (5x5x7)/Cube 0: Measurement grid: dx=8mm, dy=8mm, dz=5mm
Reference Value = 10.184 V/m; Power Drift = 0.05 dB
Peak SAR (extrapolated) = 1.341 W/kg
SAR(1 g) = 0.848 mW/g; SAR(10 g) = 0.504 mW/g
Maximum value of SAR (measured) = 0.922 mW/g

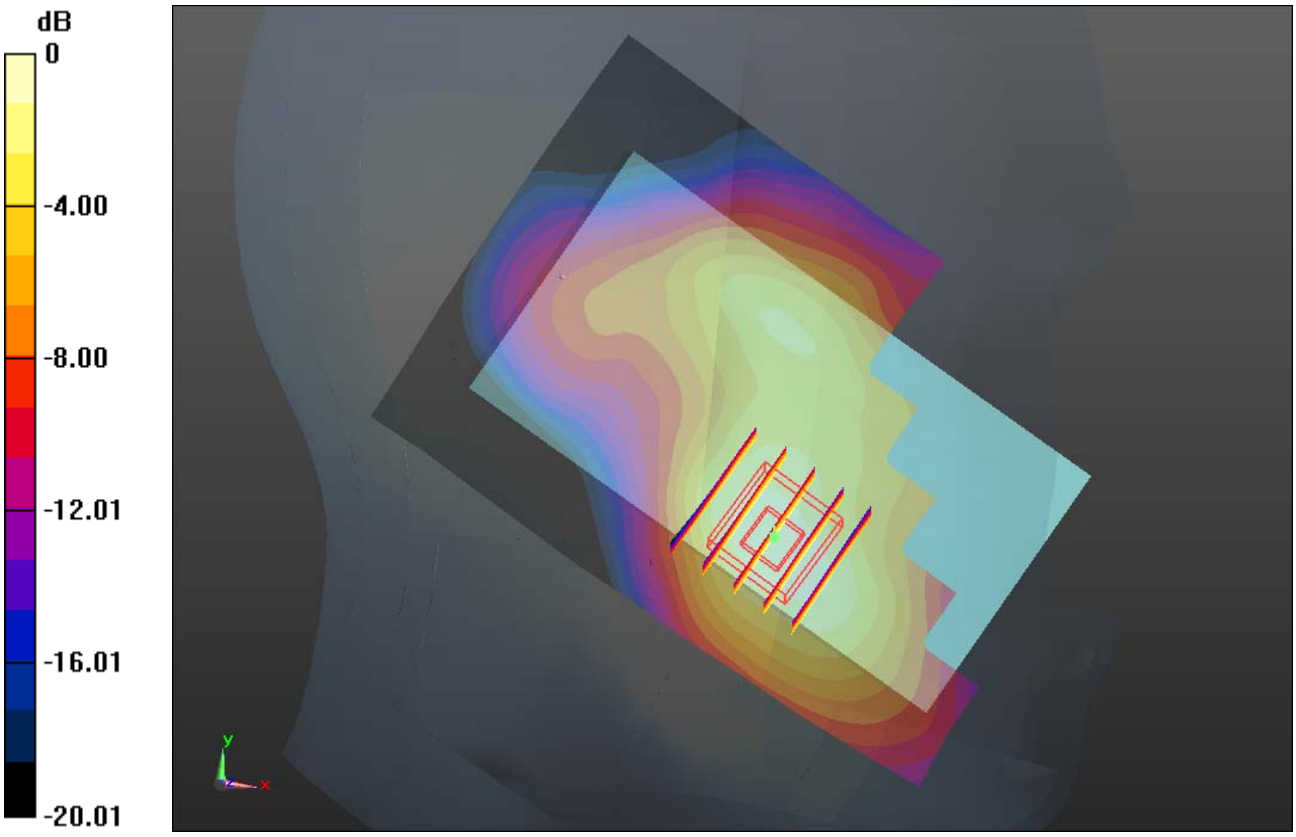

0 dB = 0.920mW/g

#02 CDMA2000 BC1_RC3 SO55_Left Cheeek_Ch600_2D

DUT: 251502-04

Communication System: CDMA2000; Frequency: 1880 MHz;Duty Cycle: 1:1
Medium: HSL_1900_120920 Medium parameters used: f = 1880 MHz; σ = 1.387 mho/m; ε_r = 39.308; ρ = 1000 kg/m^3
Ambient Temperature：23.0 ℃; Liquid Temperature：21.5 ℃

DASY5 Configuration:
- Probe: EX3DV4 - SN3857; ConvF(7.84, 7.84, 7.84); Calibrated: 2012-6-20
- Sensor-Surface: 4mm (Mechanical Surface Detection)
- Electronics: DAE4 Sn1210; Calibrated: 2011-11-18
- Phantom: SAM1; Type: SAM; Serial: TP-1479
- Measurement SW: DASY52, Version 52.8 (2); SEMCAD X Version 14.4.5 (3634)

Ch600/Area Scan (71x111x1): Measurement grid: dx=15mm, dy=15mm
Maximum value of SAR (interpolated) = 0.953 mW/g

Ch600/Zoom Scan (5x5x7)/Cube 0: Measurement grid: dx=8mm, dy=8mm, dz=5mm
Reference Value = 10.184 V/m; Power Drift = 0.05 dB
Peak SAR (extrapolated) = 1.341 W/kg
SAR(1 g) = 0.848 mW/g; SAR(10 g) = 0.504 mW/g
Maximum value of SAR (measured) = 0.922 mW/g

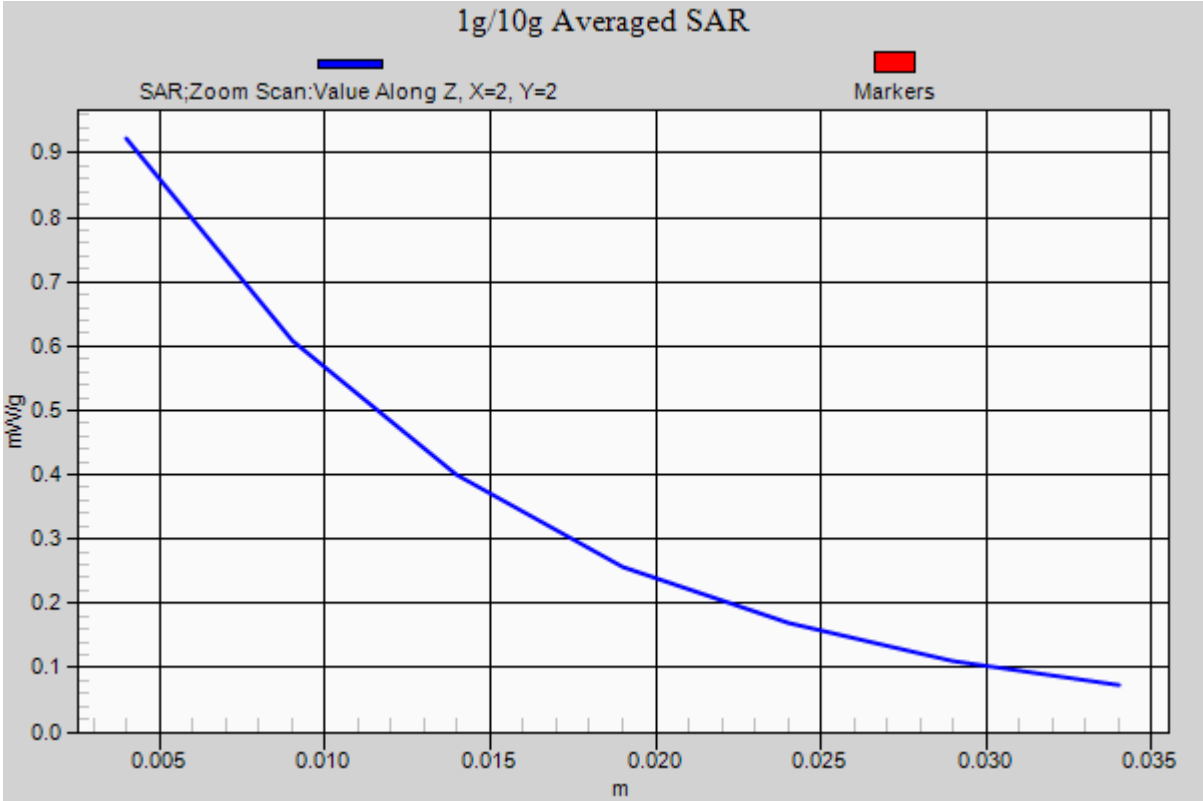
1g/10g Averaged SAR
SAR;Zoom Scan:Value Along Z, X=2, Y=2
Markers
mW/g
0.0
0.1
0.2
0.3
0.4
0.5
0.6
0.7
0.8
0.9
0.005
0.010
0.015
0.020
0.025
0.030
0.035
m

#03 CDMA2000 BC1_RC3 SO55_Left Cheeek_Ch1175

DUT: 251502-04

Communication System: CDMA2000; Frequency: 1908.75 MHz;Duty Cycle: 1:1
Medium: HSL_1900_120920 Medium parameters used: f = 1909 MHz; σ = 1.421 mho/m; ε_r = 39.309; ρ = 1000 kg/m^3
Ambient Temperature：23.0 ℃; Liquid Temperature：21.5 ℃

DASY5 Configuration:
- Probe: EX3DV4 - SN3857; ConvF(7.84, 7.84, 7.84); Calibrated: 2012-6-20
- Sensor-Surface: 4mm (Mechanical Surface Detection)
- Electronics: DAE4 Sn1210; Calibrated: 2011-11-18
- Phantom: SAM1; Type: SAM; Serial: TP-1479
- Measurement SW: DASY52, Version 52.8 (2); SEMCAD X Version 14.4.5 (3634)

Ch1175/Area Scan (71x111x1): Measurement grid: dx=15mm, dy=15mm
Maximum value of SAR (interpolated) = 0.899 mW/g

Ch1175/Zoom Scan (5x5x7)/Cube 0: Measurement grid: dx=8mm, dy=8mm, dz=5mm
Reference Value = 10.067 V/m; Power Drift = 0.08 dB
Peak SAR (extrapolated) = 1.272 W/kg
SAR(1 g) = 0.791 mW/g; SAR(10 g) = 0.467 mW/g
Maximum value of SAR (measured) = 0.862 mW/g

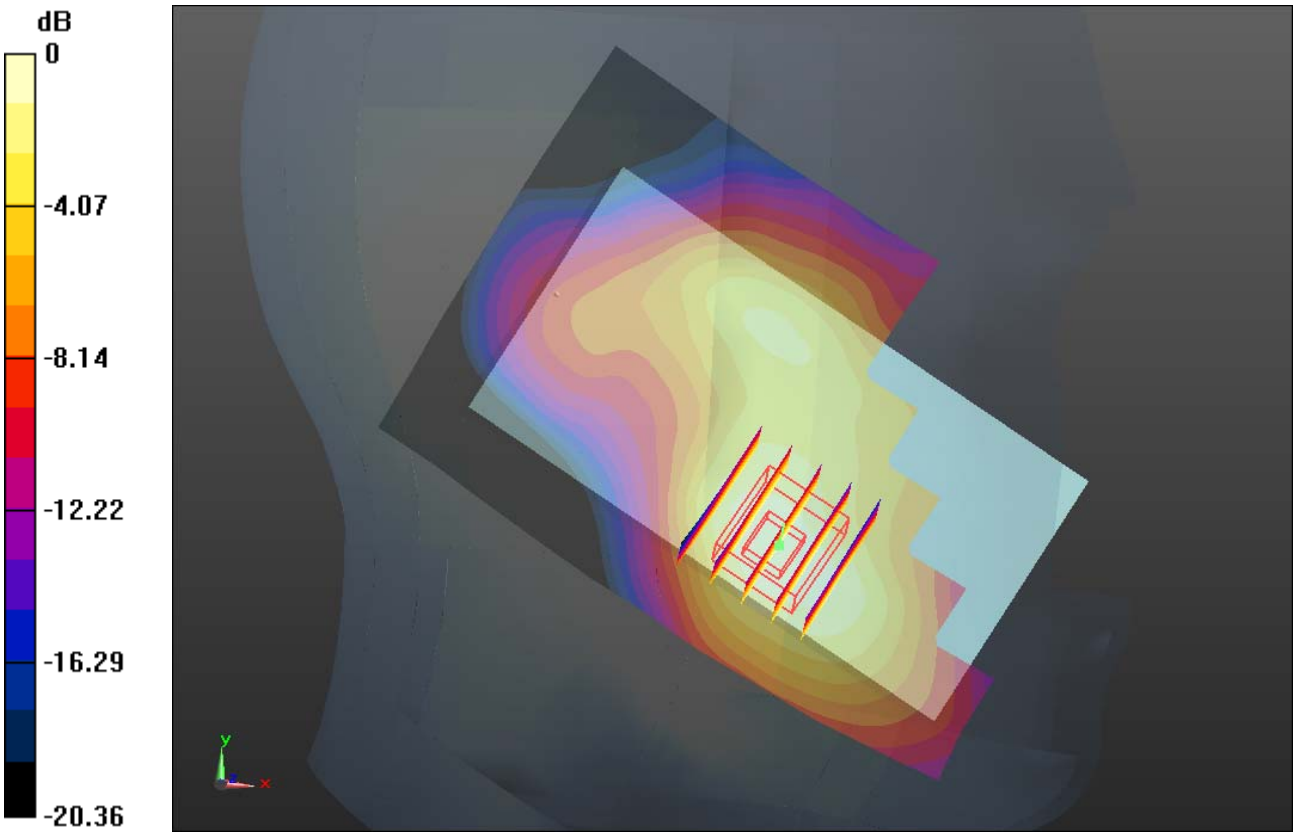

0 dB = 0.860mW/g

#04 802.11b_Left Cheek_Ch6

DUT: 251502-04

Communication System: WIFI; Frequency: 2437 MHz;Duty Cycle: 1:1
Medium: HSL_2450_120920 Medium parameters used: f = 2437 MHz; σ = 1.842 mho/m; ε_r = 37.736; ρ = 1000 kg/m^3
Ambient Temperature：23.1 ℃; Liquid Temperature：21.1 ℃

DASY5 Configuration:
- Probe: EX3DV4 - SN3857; ConvF(6.87, 6.87, 6.87); Calibrated: 2012-6-20
- Sensor-Surface: 4mm (Mechanical Surface Detection)
- Electronics: DAE4 Sn1210; Calibrated: 2011-11-18
- Phantom: SAM1; Type: SAM; Serial: TP-1479
- Measurement SW: DASY52, Version 52.8 (2); SEMCAD X Version 14.4.5 (3634)

Ch6/Area Scan (71x111x1): Measurement grid: dx=15mm, dy=15mm
Maximum value of SAR (interpolated) = 0.050 mW/g

Ch6/Zoom Scan (5x5x7)/Cube 0: Measurement grid: dx=8mm, dy=8mm, dz=5mm
Reference Value = 2.963 V/m; Power Drift = -0.17 dB
Peak SAR (extrapolated) = 0.082 W/kg
SAR(1 g) = 0.039 mW/g; SAR(10 g) = 0.014 mW/g
Maximum value of SAR (measured) = 0.045 mW/g

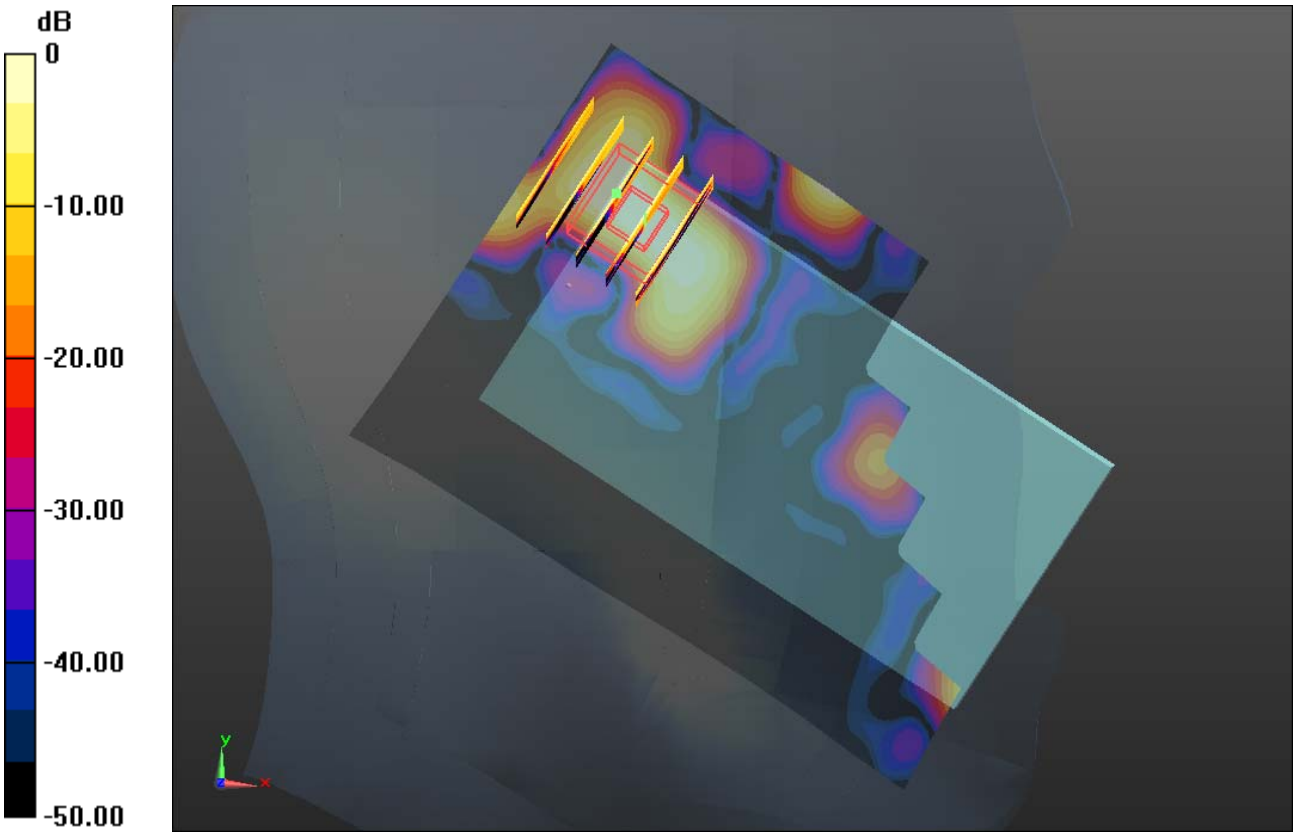

0 dB = 0.040mW/g

#04 802.11b_Left Cheek_Ch6_2D

DUT: 251502-04

Communication System: WIFI; Frequency: 2437 MHz;Duty Cycle: 1:1
Medium: HSL_2450_120920 Medium parameters used: f = 2437 MHz; σ = 1.842 mho/m; ε_r = 37.736; ρ = 1000 kg/m^3
Ambient Temperature：23.1 ℃; Liquid Temperature：21.1 ℃

DASY5 Configuration:
- Probe: EX3DV4 - SN3857; ConvF(6.87, 6.87, 6.87); Calibrated: 2012-6-20
- Sensor-Surface: 4mm (Mechanical Surface Detection)
- Electronics: DAE4 Sn1210; Calibrated: 2011-11-18
- Phantom: SAM1; Type: SAM; Serial: TP-1479
- Measurement SW: DASY52, Version 52.8 (2); SEMCAD X Version 14.4.5 (3634)

Ch6/Area Scan (71x111x1): Measurement grid: dx=15mm, dy=15mm
Maximum value of SAR (interpolated) = 0.050 mW/g

Ch6/Zoom Scan (5x5x7)/Cube 0: Measurement grid: dx=8mm, dy=8mm, dz=5mm
Reference Value = 2.963 V/m; Power Drift = -0.17 dB
Peak SAR (extrapolated) = 0.082 W/kg
SAR(1 g) = 0.039 mW/g; SAR(10 g) = 0.014 mW/g
Maximum value of SAR (measured) = 0.045 mW/g

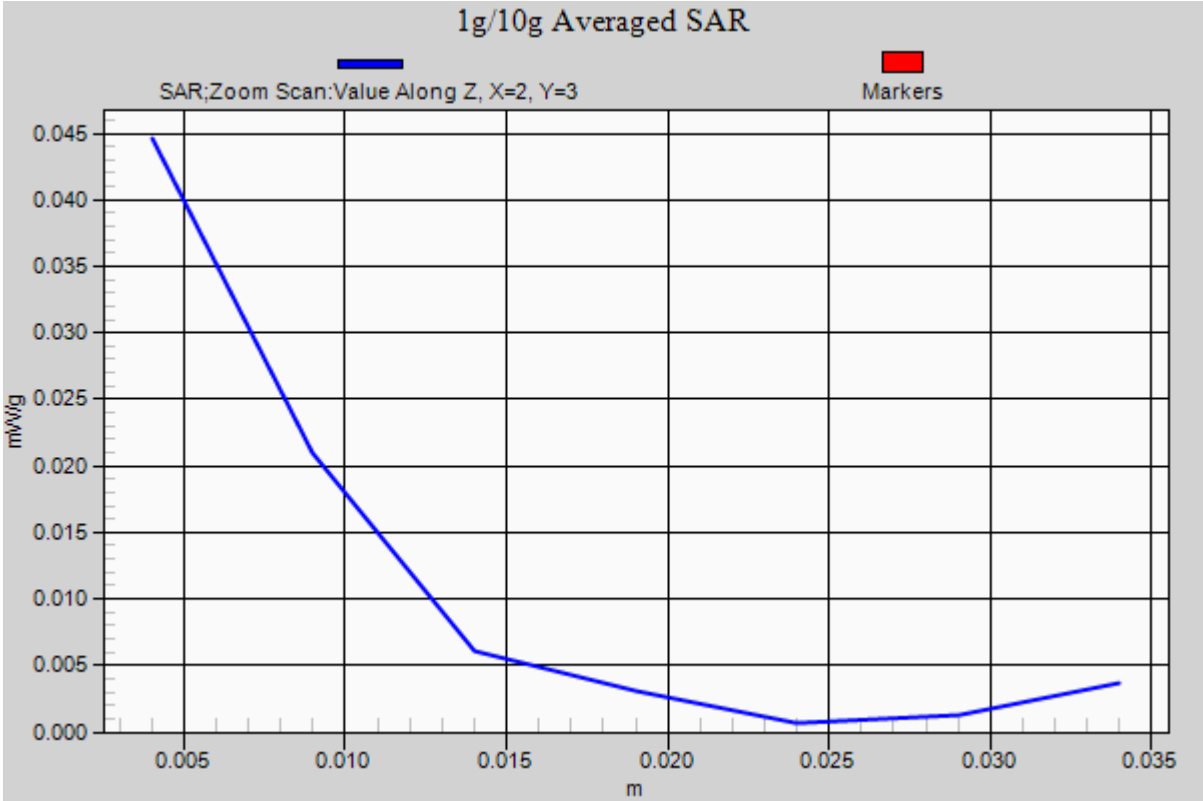
1g/10g Averaged SAR
SAR;Zoom Scan:Value Along Z, X=2, Y=3
Markers
mW/g
0.045
0.040
0.035
0.030
0.025
0.020
0.015
0.010
0.005
0.000
0.005
0.010
0.015
0.020
0.025
0.030
0.035
m

#05 CDMA2000 BC1_RTAP 153.6_Back_1cm_Ch600

DUT: 251502-04

Communication System: CDMA2000; Frequency: 1880 MHz;Duty Cycle: 1:1
Medium: MSL_1800_120920 Medium parameters used: f = 1880 MHz; σ = 1.489 mho/m; ε_r = 53.955; ρ = 1000 kg/m^3
Ambient Temperature：23.4 ℃; Liquid Temperature：21.6 ℃

DASY5 Configuration:
- Probe: EX3DV4 - SN3857; ConvF(7.35, 7.35, 7.35); Calibrated: 2012-6-20
- Sensor-Surface: 4mm (Mechanical Surface Detection)
- Electronics: DAE4 Sn1210; Calibrated: 2011-11-18
- Phantom: SAM2; Type: SAM; Serial: TP-1477
- Measurement SW: DASY52, Version 52.8 (2); SEMCAD X Version 14.4.5 (3634)

Ch600/Area Scan (71x111x1): Measurement grid: dx=15mm, dy=15mm
Maximum value of SAR (interpolated) = 1.190 mW/g

Ch600/Zoom Scan (5x5x7)/Cube 0: Measurement grid: dx=8mm, dy=8mm, dz=5mm
Reference Value = 14.458 V/m; Power Drift = -0.15 dB
Peak SAR (extrapolated) = 1.720 W/kg
SAR(1 g) = 1.12 mW/g; SAR(10 g) = 0.699 mW/g
Maximum value of SAR (measured) = 1.205 mW/g

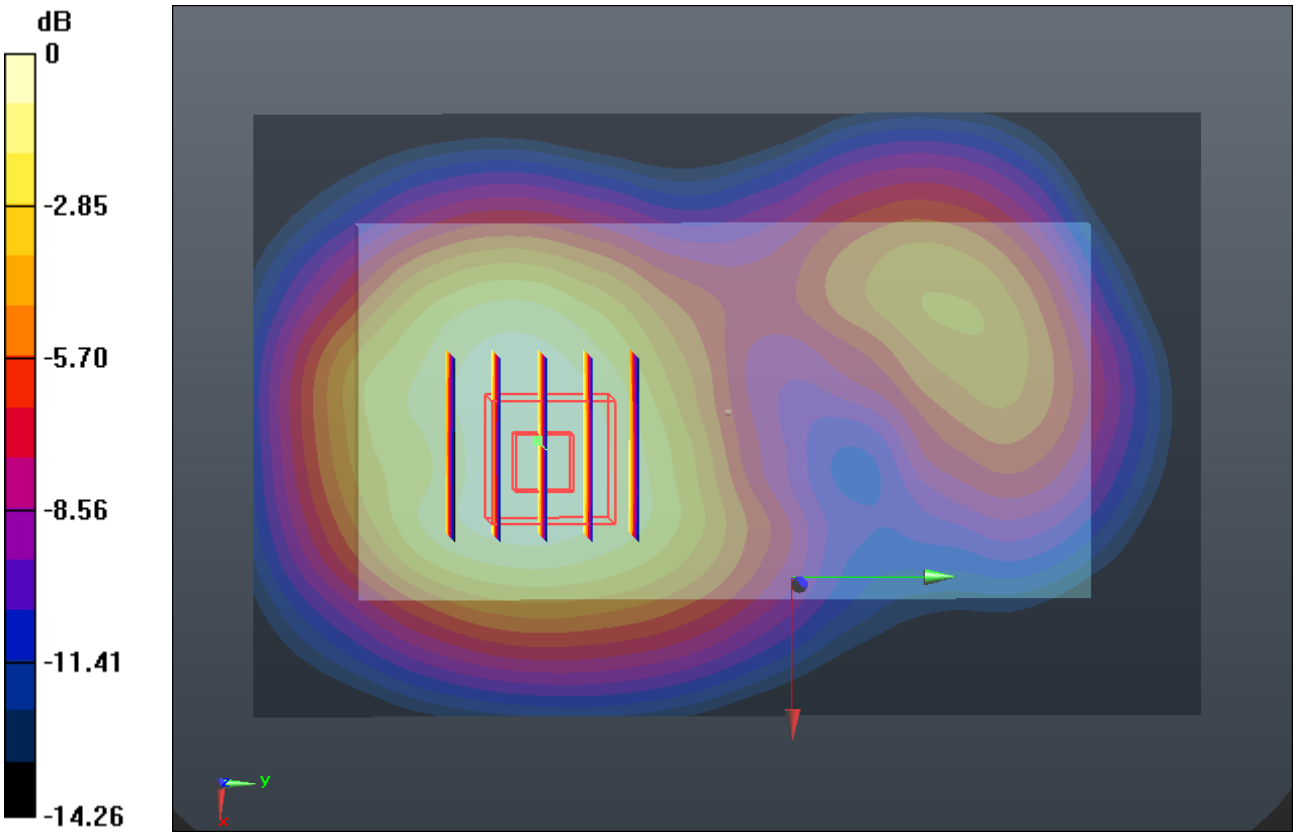

0 dB = 1.200mW/g

#06 CDMA2000 BC1_RTAP 153.6_Back_1cm_Ch25

DUT: 251502-04

Communication System: CDMA2000; Frequency: 1851.25 MHz;Duty Cycle: 1:1
Medium: MSL_1800_120920 Medium parameters used: f = 1851.25 MHz; σ = 1.457 mho/m; ε_r = 54.029; ρ = 1000 kg/m^3
Ambient Temperature：23.4 ℃; Liquid Temperature：21.6 ℃

DASY5 Configuration:
- Probe: EX3DV4 - SN3857; ConvF(7.35, 7.35, 7.35); Calibrated: 2012-6-20
- Sensor-Surface: 4mm (Mechanical Surface Detection)
- Electronics: DAE4 Sn1210; Calibrated: 2011-11-18
- Phantom: SAM2; Type: SAM; Serial: TP-1477
- Measurement SW: DASY52, Version 52.8 (2); SEMCAD X Version 14.4.5 (3634)

Ch25/Area Scan (71x111x1): Measurement grid: dx=15mm, dy=15mm
Maximum value of SAR (interpolated) = 1.243 mW/g

Ch25/Zoom Scan (5x5x7)/Cube 0: Measurement grid: dx=8mm, dy=8mm, dz=5mm
Reference Value = 13.600 V/m; Power Drift = -0.06 dB
Peak SAR (extrapolated) = 1.798 W/kg
SAR(1 g) = 1.17 mW/g; SAR(10 g) = 0.725 mW/g
Maximum value of SAR (measured) = 1.259 mW/g

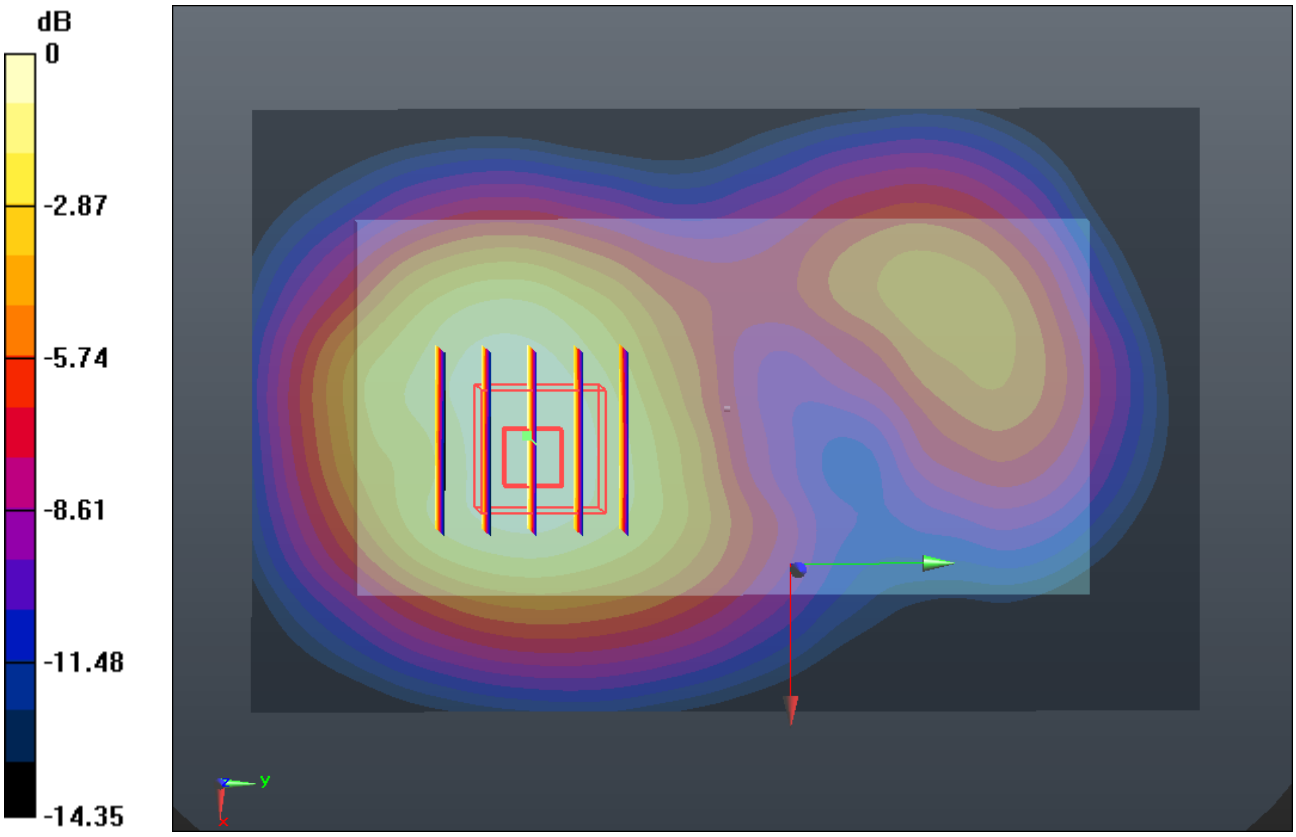

0 dB = 1.260mW/g

#06 CDMA2000 BC1_RTAP 153.6_Back_1cm_Ch25_2D

DUT: 251502-04

Communication System: CDMA2000; Frequency: 1851.25 MHz;Duty Cycle: 1:1
Medium: MSL_1800_120920 Medium parameters used: f = 1851.25 MHz; σ = 1.457 mho/m; ε_r = 54.029; ρ = 1000 kg/m^3
Ambient Temperature：23.4 ℃; Liquid Temperature：21.6 ℃

DASY5 Configuration:
- Probe: EX3DV4 - SN3857; ConvF(7.35, 7.35, 7.35); Calibrated: 2012-6-20
- Sensor-Surface: 4mm (Mechanical Surface Detection)
- Electronics: DAE4 Sn1210; Calibrated: 2011-11-18
- Phantom: SAM2; Type: SAM; Serial: TP-1477
- Measurement SW: DASY52, Version 52.8 (2); SEMCAD X Version 14.4.5 (3634)

Ch25/Area Scan (71x111x1): Measurement grid: dx=15mm, dy=15mm
Maximum value of SAR (interpolated) = 1.243 mW/g

Ch25/Zoom Scan (5x5x7)/Cube 0: Measurement grid: dx=8mm, dy=8mm, dz=5mm
Reference Value = 13.600 V/m; Power Drift = -0.06 dB
Peak SAR (extrapolated) = 1.798 W/kg
SAR(1 g) = 1.17 mW/g; SAR(10 g) = 0.725 mW/g
Maximum value of SAR (measured) = 1.259 mW/g

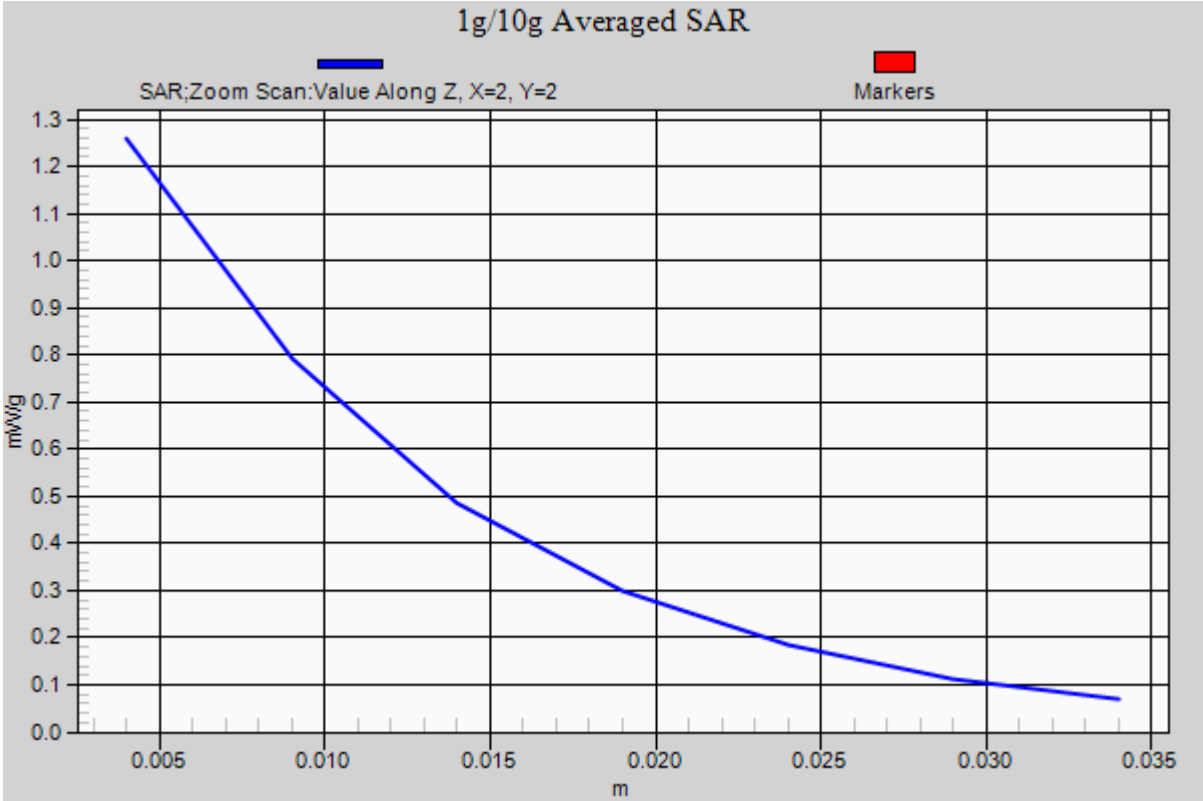
1g/10g Averaged SAR
SAR;Zoom Scan:Value Along Z, X=2, Y=2
Markers
mW/g
1.3
1.2
1.1
1.0
0.9
0.8
0.7
0.6
0.5
0.4
0.3
0.2
0.1
0.0
0.005
0.010
0.015
0.020
0.025
0.030
0.035
m

#07 CDMA2000 BC1_RTAP 153.6_Back_1cm_Ch1175

DUT: 251502-04

Communication System: CDMA2000; Frequency: 1908.75 MHz;Duty Cycle: 1:1
Medium: MSL_1800_120920 Medium parameters used: f = 1909 MHz; σ = 1.523 mho/m; ε_r = 53.879; ρ = 1000 kg/m^3
Ambient Temperature：23.4 ℃; Liquid Temperature：21.6 ℃

DASY5 Configuration:
- Probe: EX3DV4 - SN3857; ConvF(7.35, 7.35, 7.35); Calibrated: 2012-6-20
- Sensor-Surface: 4mm (Mechanical Surface Detection)
- Electronics: DAE4 Sn1210; Calibrated: 2011-11-18
- Phantom: SAM2; Type: SAM; Serial: TP-1477
- Measurement SW: DASY52, Version 52.8 (2); SEMCAD X Version 14.4.5 (3634)

Ch1175/Area Scan (71x111x1): Measurement grid: dx=15mm, dy=15mm
Maximum value of SAR (interpolated) = 1.098 mW/g

Ch1175/Zoom Scan (5x5x7)/Cube 0: Measurement grid: dx=8mm, dy=8mm, dz=5mm
Reference Value = 14.624 V/m; Power Drift = -0.10 dB
Peak SAR (extrapolated) = 1.610 W/kg
SAR(1 g) = 1.05 mW/g; SAR(10 g) = 0.659 mW/g
Maximum value of SAR (measured) = 1.129 mW/g

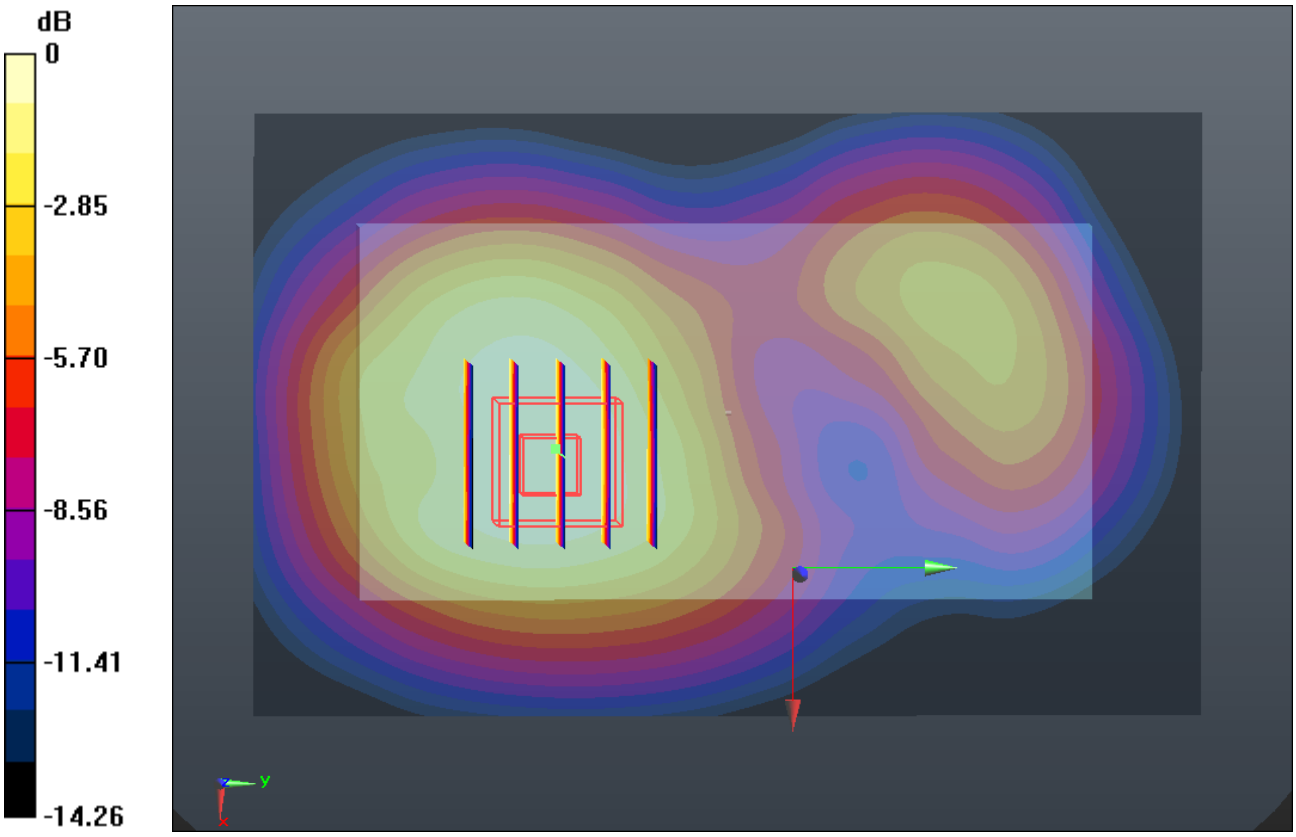

0 dB = 1.130mW/g

#09 CDMA2000 BC1_RC3 SO32_Back_1cm_Ch25_Headset

DUT: 251502-04

Communication System: CDMA2000; Frequency: 1851.25 MHz;Duty Cycle: 1:1
Medium: MSL_1900_121018 Medium parameters used: f = 1851.25 MHz; σ = 1.471 mho/m; ε_r = 54.769; ρ = 1000 kg/m^3
Ambient Temperature：23.3 ℃; Liquid Temperature：21.5 ℃

DASY5 Configuration:
- Probe: EX3DV4 - SN3857; ConvF(7.35, 7.35, 7.35); Calibrated: 2012-6-20
- Sensor-Surface: 4mm (Mechanical Surface Detection)
- Electronics: DAE4 Sn1210; Calibrated: 2011-11-18
- Phantom: SAM2; Type: SAM; Serial: TP-1477
- Measurement SW: DASY52, Version 52.8 (2); SEMCAD X Version 14.4.5 (3634)

Ch25/Area Scan (71x111x1): Measurement grid: dx=15mm, dy=15mm
Maximum value of SAR (interpolated) = 1.181 mW/g

Ch25/Zoom Scan (5x5x7)/Cube 0: Measurement grid: dx=8mm, dy=8mm, dz=5mm
Reference Value = 16.520 V/m; Power Drift = -0.02 dB
Peak SAR (extrapolated) = 1.767 W/kg
SAR(1 g) = 1.12 mW/g; SAR(10 g) = 0.685 mW/g
Maximum value of SAR (measured) = 1.209 mW/g

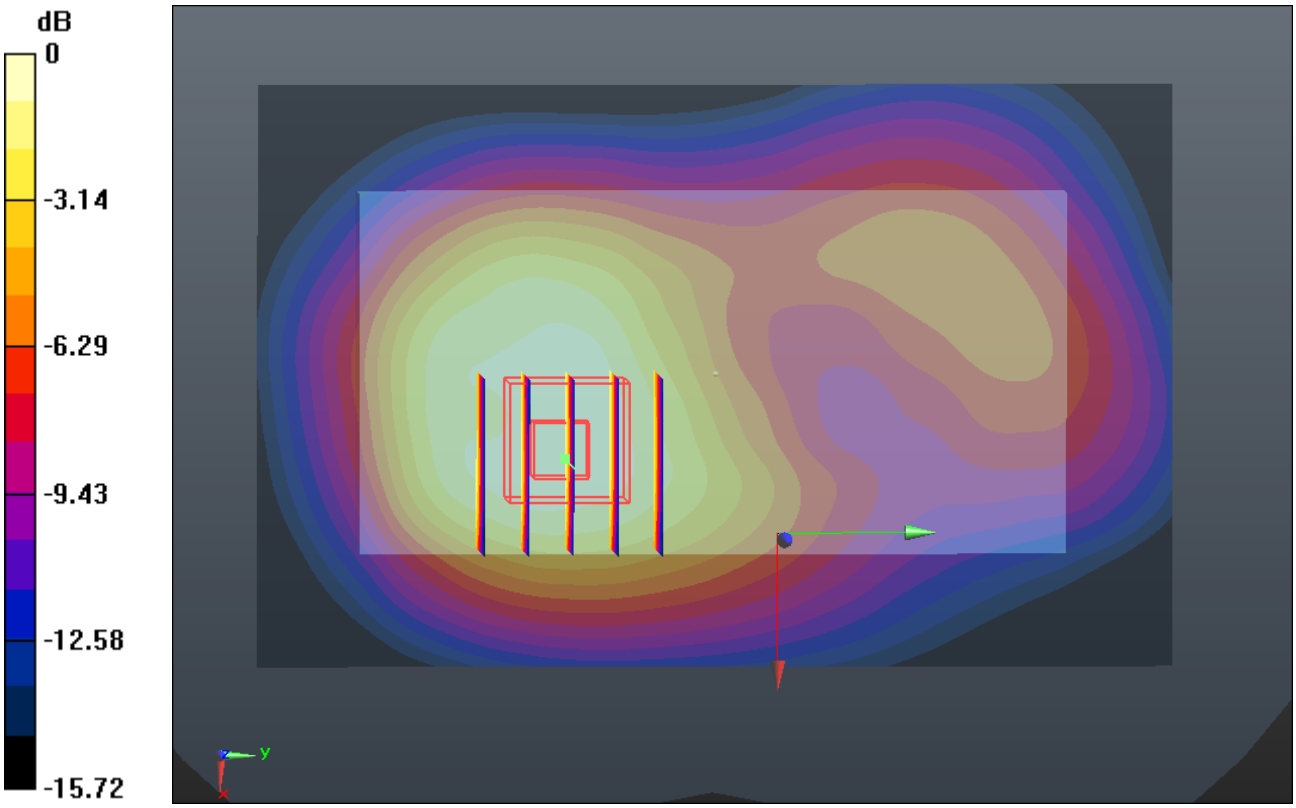

0 dB = 1.210mW/g

#10 CDMA2000 BC1_RC3 SO32_Back_1cm_Ch600_Headset

DUT: 251502-04

Communication System: CDMA2000; Frequency: 1880 MHz;Duty Cycle: 1:1
Medium: MSL_1900_121018 Medium parameters used: f = 1880 MHz; σ = 1.509 mho/m; ε_r = 54.703; ρ = 1000 kg/m^3
Ambient Temperature：23.3 ℃; Liquid Temperature：21.5 ℃

DASY5 Configuration:
- Probe: EX3DV4 - SN3857; ConvF(7.35, 7.35, 7.35); Calibrated: 2012-6-20
- Sensor-Surface: 4mm (Mechanical Surface Detection)
- Electronics: DAE4 Sn1210; Calibrated: 2011-11-18
- Phantom: SAM2; Type: SAM; Serial: TP-1477
- Measurement SW: DASY52, Version 52.8 (2); SEMCAD X Version 14.4.5 (3634)

Ch600/Area Scan (71x111x1): Measurement grid: dx=15mm, dy=15mm
Maximum value of SAR (interpolated) = 1.225 mW/g

Ch600/Zoom Scan (5x5x7)/Cube 0: Measurement grid: dx=8mm, dy=8mm, dz=5mm
Reference Value = 16.319 V/m; Power Drift = -0.01 dB
Peak SAR (extrapolated) = 1.802 W/kg
SAR(1 g) = 1.17 mW/g; SAR(10 g) = 0.713 mW/g
Maximum value of SAR (measured) = 1.260 mW/g

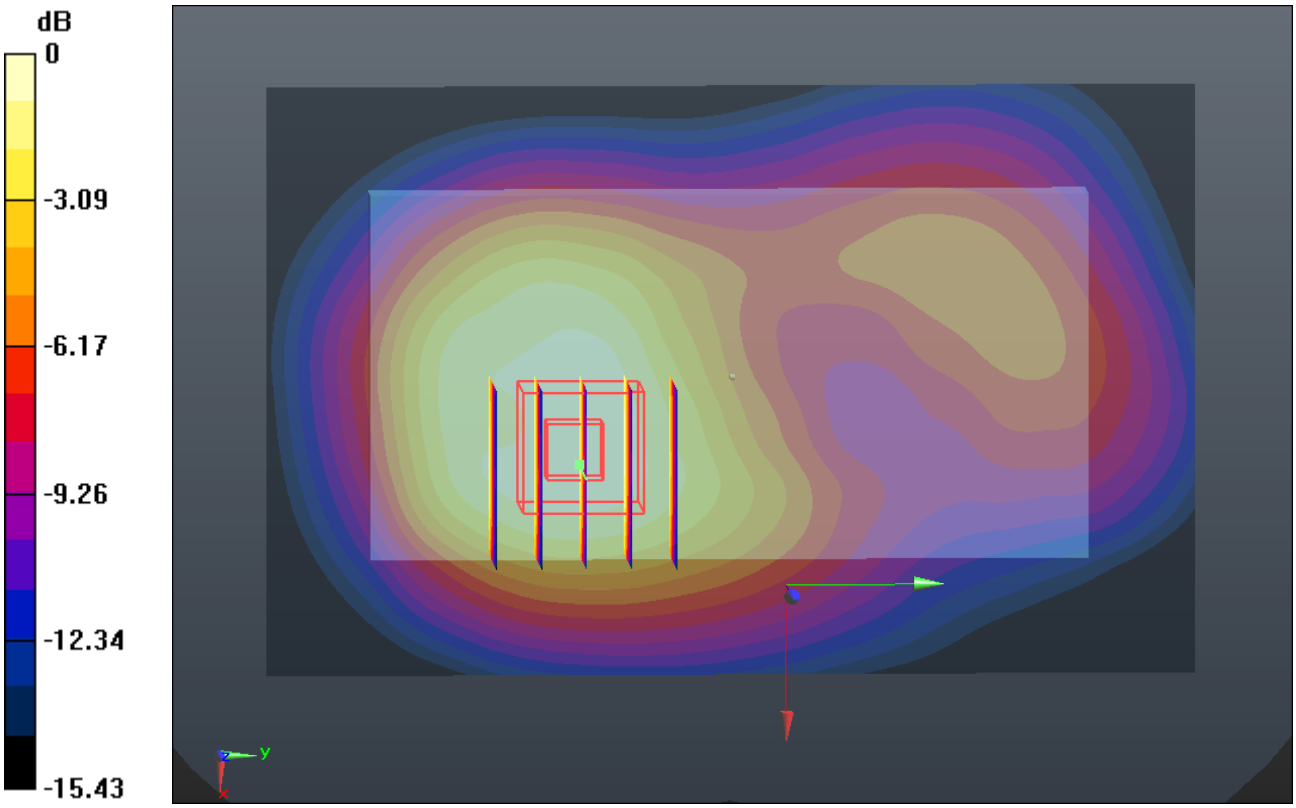

0 dB = 1.260mW/g

#10 CDMA2000 BC1_RC3 SO32_Back_1cm_Ch600_Headset_2D

DUT: 251502-04

Communication System: CDMA2000; Frequency: 1880 MHz;Duty Cycle: 1:1
Medium: MSL_1900_121018 Medium parameters used: f = 1880 MHz; σ = 1.509 mho/m; ε_r = 54.703; ρ = 1000 kg/m^3
Ambient Temperature：23.3 ℃; Liquid Temperature：21.5 ℃

DASY5 Configuration:
- Probe: EX3DV4 - SN3857; ConvF(7.35, 7.35, 7.35); Calibrated: 2012-6-20
- Sensor-Surface: 4mm (Mechanical Surface Detection)
- Electronics: DAE4 Sn1210; Calibrated: 2011-11-18
- Phantom: SAM2; Type: SAM; Serial: TP-1477
- Measurement SW: DASY52, Version 52.8 (2); SEMCAD X Version 14.4.5 (3634)

Ch600/Area Scan (71x111x1): Measurement grid: dx=15mm, dy=15mm
Maximum value of SAR (interpolated) = 1.225 mW/g

Ch600/Zoom Scan (5x5x7)/Cube 0: Measurement grid: dx=8mm, dy=8mm, dz=5mm
Reference Value = 16.319 V/m; Power Drift = -0.01 dB
Peak SAR (extrapolated) = 1.802 W/kg
SAR(1 g) = 1.17 mW/g; SAR(10 g) = 0.713 mW/g
Maximum value of SAR (measured) = 1.260 mW/g

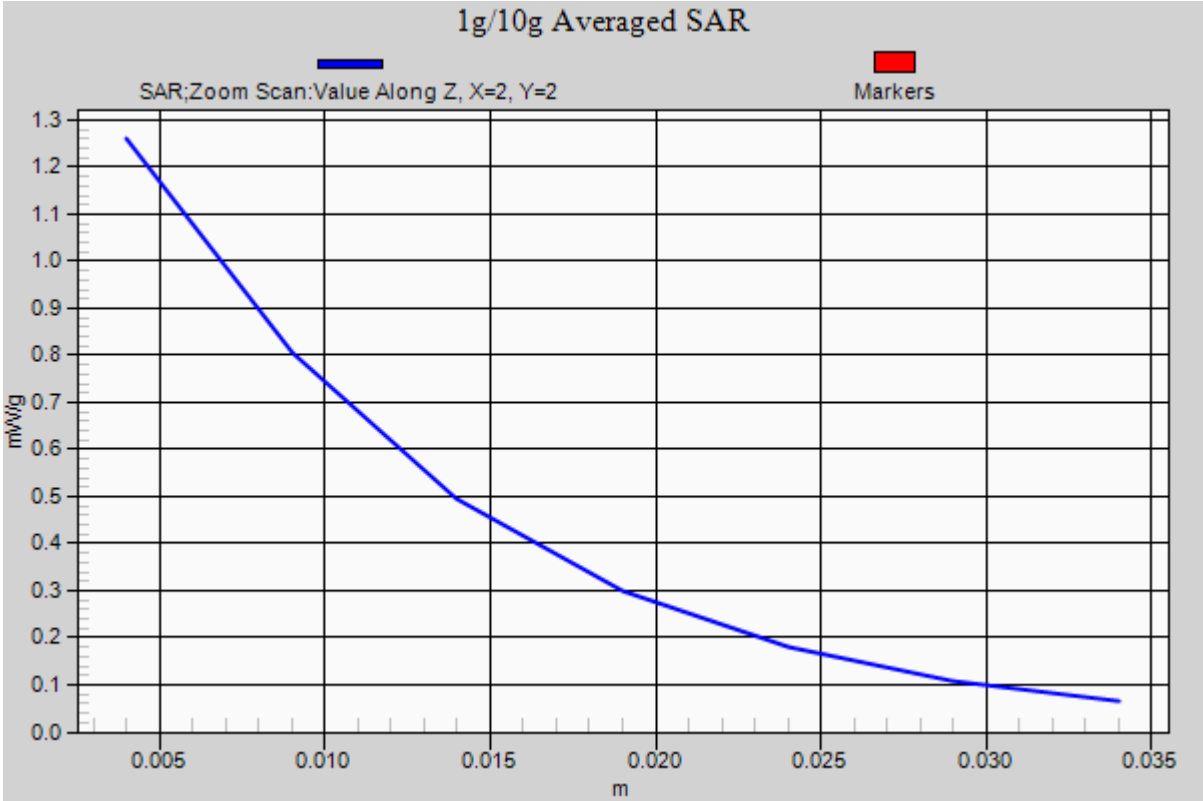
1g/10g Averaged SAR
SAR;Zoom Scan:Value Along Z, X=2, Y=2
Markers
mW/g
1.3
1.2
1.1
1.0
0.9
0.8
0.7
0.6
0.5
0.4
0.3
0.2
0.1
0.0
0.005
0.010
0.015
0.020
0.025
0.030
0.035
m

#11 CDMA2000 BC1_RC3 SO32_Back_1cm_Ch1175_Headset

DUT: 251502-04

Communication System: CDMA2000; Frequency: 1908.75 MHz;Duty Cycle: 1:1
Medium: MSL_1900_121018 Medium parameters used: f = 1909 MHz; σ = 1.539 mho/m; ε_r = 54.655; ρ = 1000 kg/m^3
Ambient Temperature：23.3 ℃; Liquid Temperature：21.5 ℃

DASY5 Configuration:
- Probe: EX3DV4 - SN3857; ConvF(7.35, 7.35, 7.35); Calibrated: 2012-6-20
- Sensor-Surface: 4mm (Mechanical Surface Detection)
- Electronics: DAE4 Sn1210; Calibrated: 2011-11-18
- Phantom: SAM2; Type: SAM; Serial: TP-1477
- Measurement SW: DASY52, Version 52.8 (2); SEMCAD X Version 14.4.5 (3634)

Ch1175/Area Scan (71x111x1): Measurement grid: dx=15mm, dy=15mm
Maximum value of SAR (interpolated) = 1.156 mW/g

Ch1175/Zoom Scan (5x5x7)/Cube 0: Measurement grid: dx=8mm, dy=8mm, dz=5mm
Reference Value = 15.835 V/m; Power Drift = -0.15 dB
Peak SAR (extrapolated) = 1.697 W/kg
SAR(1 g) = 1.08 mW/g; SAR(10 g) = 0.657 mW/g
Maximum value of SAR (measured) = 1.157 mW/g

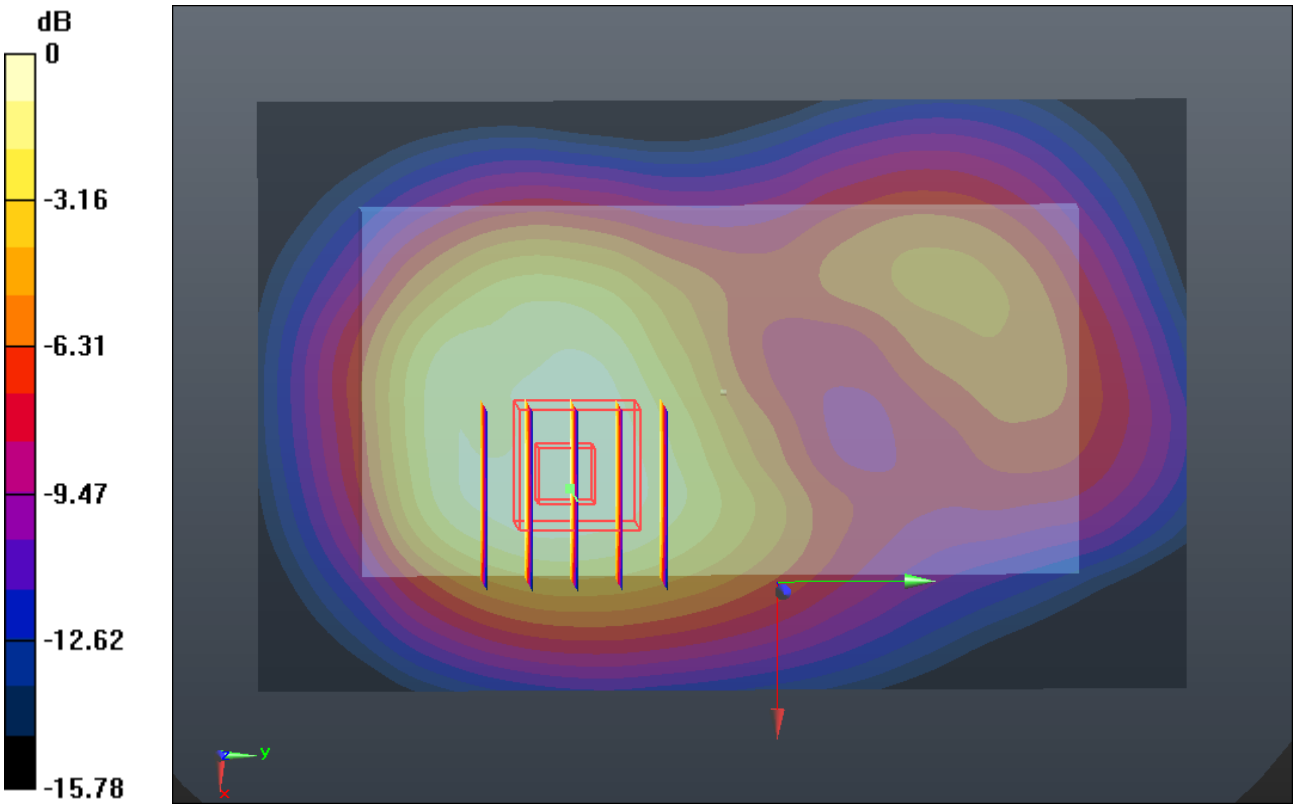

0 dB = 1.160mW/g

#12 802.11b_Back_1cm_Ch6

DUT: 251502-04

Communication System: WIFI; Frequency: 2437 MHz;Duty Cycle: 1:1
Medium: MSL_2450_121018 Medium parameters used: f = 2437 MHz; σ = 1.949 mho/m; ε_r = 54.149; ρ = 1000 kg/m^3
Ambient Temperature：23.2 ℃; Liquid Temperature：21.3 ℃

DASY5 Configuration:
- Probe: EX3DV4 - SN3857; ConvF(6.94, 6.94, 6.94); Calibrated: 2012-6-20
- Sensor-Surface: 4mm (Mechanical Surface Detection)
- Electronics: DAE4 Sn1210; Calibrated: 2011-11-18
- Phantom: SAM1; Type: SAM; Serial: TP-1479
- Measurement SW: DASY52, Version 52.8 (2); SEMCAD X Version 14.4.5 (3634)

Ch6/Area Scan (71x111x1): Measurement grid: dx=15mm, dy=15mm
Maximum value of SAR (interpolated) = 0.042 mW/g

Ch6/Zoom Scan (5x5x7)/Cube 0: Measurement grid: dx=8mm, dy=8mm, dz=5mm
Reference Value = 1.843 V/m; Power Drift = 0.04 dB
Peak SAR (extrapolated) = 0.099 W/kg
SAR(1 g) = 0.039 mW/g; SAR(10 g) = 0.016 mW/g
Maximum value of SAR (measured) = 0.041 mW/g

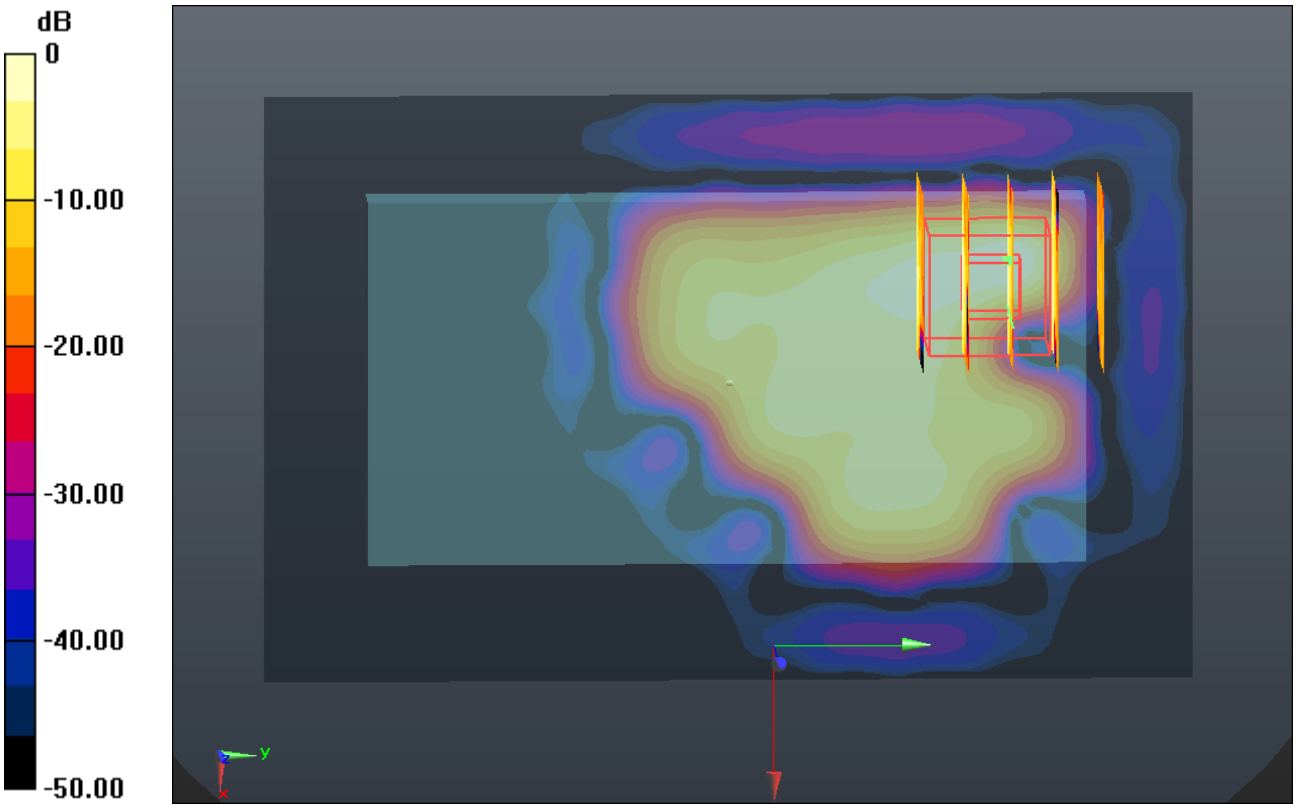

0 dB = 0.040mW/g

#12 802.11b_Back_1cm_Ch6_2D

DUT: 251502-04

Communication System: WIFI; Frequency: 2437 MHz;Duty Cycle: 1:1
Medium: MSL_2450_121018 Medium parameters used: f = 2437 MHz; σ = 1.949 mho/m; ε_r = 54.149; ρ = 1000 kg/m^3
Ambient Temperature：23.2 ℃; Liquid Temperature：21.3 ℃

DASY5 Configuration:
- Probe: EX3DV4 - SN3857; ConvF(6.94, 6.94, 6.94); Calibrated: 2012-6-20
- Sensor-Surface: 4mm (Mechanical Surface Detection)
- Electronics: DAE4 Sn1210; Calibrated: 2011-11-18
- Phantom: SAM1; Type: SAM; Serial: TP-1479
- Measurement SW: DASY52, Version 52.8 (2); SEMCAD X Version 14.4.5 (3634)

Ch6/Area Scan (71x111x1): Measurement grid: dx=15mm, dy=15mm
Maximum value of SAR (interpolated) = 0.042 mW/g

Ch6/Zoom Scan (5x5x7)/Cube 0: Measurement grid: dx=8mm, dy=8mm, dz=5mm
Reference Value = 1.843 V/m; Power Drift = 0.04 dB
Peak SAR (extrapolated) = 0.099 W/kg
SAR(1 g) = 0.039 mW/g; SAR(10 g) = 0.016 mW/g
Maximum value of SAR (measured) = 0.041 mW/g

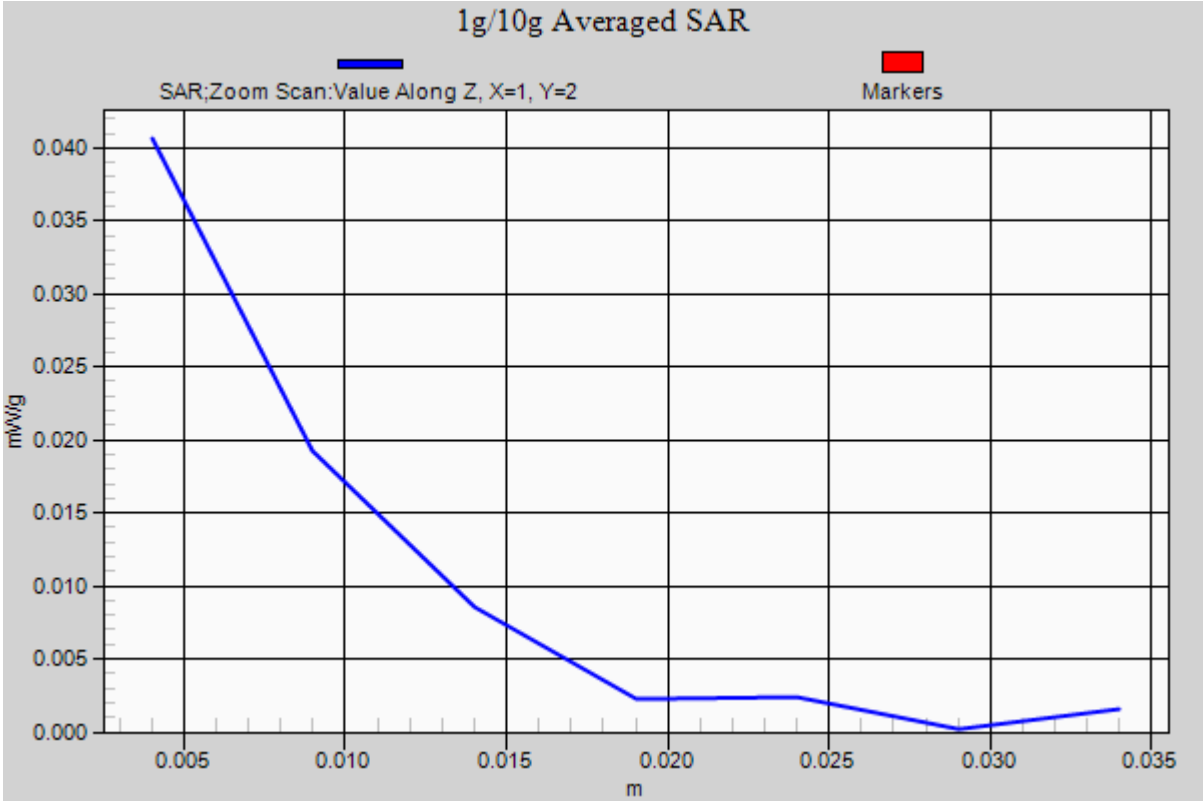
1g/10g Averaged SAR
SAR;Zoom Scan:Value Along Z, X=1, Y=2
Markers
mW/g
0.040
0.035
0.030
0.025
0.020
0.015
0.010
0.005
0.000
0.005
0.010
0.015
0.020
0.025
0.030
0.035
m

#08 802.11b_Back_1cm_Ch6_Headset

DUT: 251502-04

Communication System: WIFI; Frequency: 2437 MHz;Duty Cycle: 1:1
Medium: MSL_2450_120920 Medium parameters used: f = 2437 MHz; σ = 1.922 mho/m; ε_r = 53.921; ρ = 1000 kg/m^3
Ambient Temperature：23.4 ℃; Liquid Temperature：21.5 ℃

DASY5 Configuration:
- Probe: EX3DV4 - SN3857; ConvF(6.94, 6.94, 6.94); Calibrated: 2012-6-20
- Sensor-Surface: 4mm (Mechanical Surface Detection)
- Electronics: DAE4 Sn1210; Calibrated: 2011-11-18
- Phantom: SAM2; Type: SAM; Serial: TP-1477
- Measurement SW: DASY52, Version 52.8 (2); SEMCAD X Version 14.4.5 (3634)

Ch6/Area Scan (71x111x1): Measurement grid: dx=15mm, dy=15mm
Maximum value of SAR (interpolated) = 0.112 mW/g

Ch6/Zoom Scan (5x5x7)/Cube 0: Measurement grid: dx=8mm, dy=8mm, dz=5mm
Reference Value = 2.976 V/m; Power Drift = 0.03 dB
Peak SAR (extrapolated) = 0.107 W/kg
SAR(1 g) = 0.075 mW/g; SAR(10 g) = 0.035 mW/g
Maximum value of SAR (measured) = 0.090 mW/g

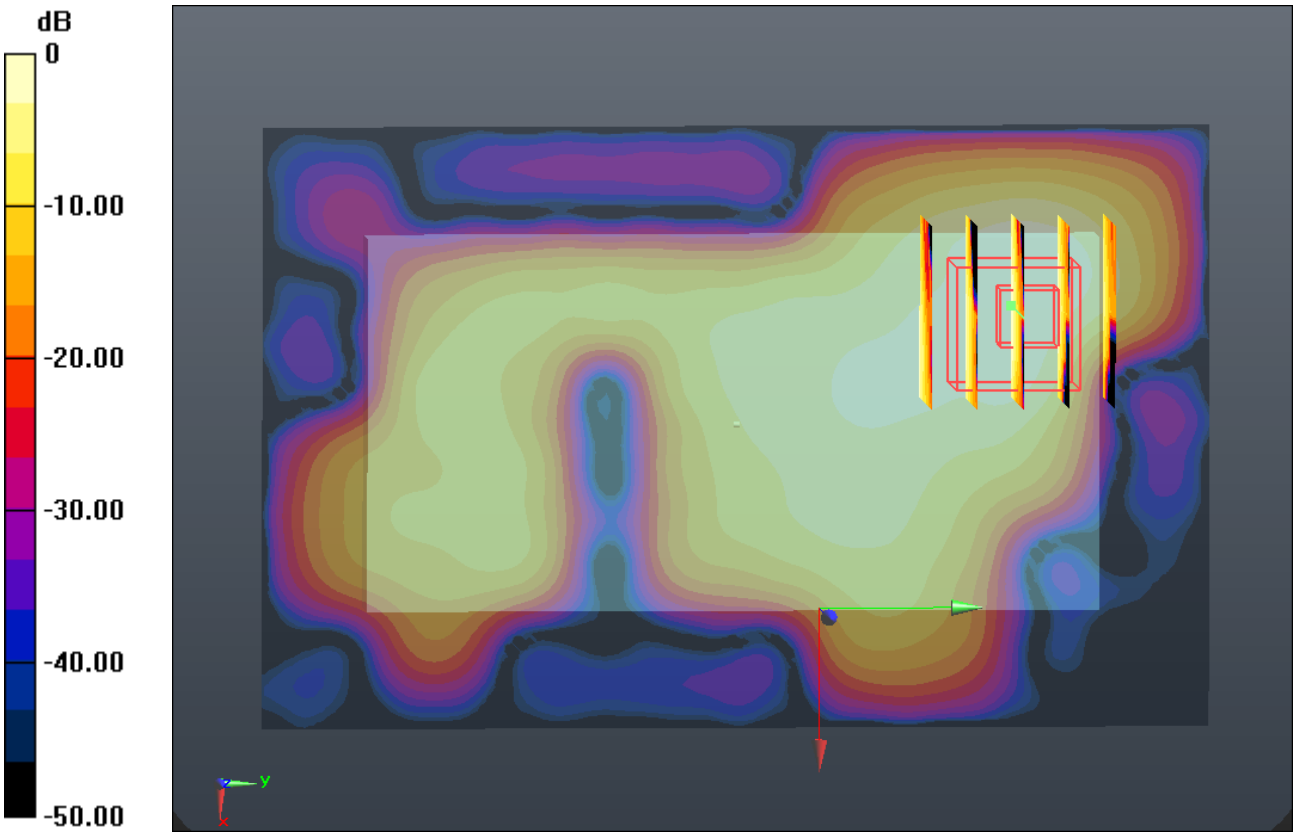

0 dB = 0.090mW/g

#08 802.11b_Back_1cm_Ch6_Headset_2D

DUT: 251502-04

Communication System: WIFI; Frequency: 2437 MHz;Duty Cycle: 1:1
Medium: MSL_2450_120920 Medium parameters used: f = 2437 MHz; σ = 1.922 mho/m; ε_r = 53.921; ρ = 1000 kg/m^3
Ambient Temperature：23.4 ℃; Liquid Temperature：21.5 ℃

DASY5 Configuration:
- Probe: EX3DV4 - SN3857; ConvF(6.94, 6.94, 6.94); Calibrated: 2012-6-20
- Sensor-Surface: 4mm (Mechanical Surface Detection)
- Electronics: DAE4 Sn1210; Calibrated: 2011-11-18
- Phantom: SAM2; Type: SAM; Serial: TP-1477
- Measurement SW: DASY52, Version 52.8 (2); SEMCAD X Version 14.4.5 (3634)

Ch6/Area Scan (71x111x1): Measurement grid: dx=15mm, dy=15mm
Maximum value of SAR (interpolated) = 0.112 mW/g

Ch6/Zoom Scan (5x5x7)/Cube 0: Measurement grid: dx=8mm, dy=8mm, dz=5mm
Reference Value = 2.976 V/m; Power Drift = 0.03 dB
Peak SAR (extrapolated) = 0.107 W/kg
SAR(1 g) = 0.075 mW/g; SAR(10 g) = 0.035 mW/g
Maximum value of SAR (measured) = 0.090 mW/g

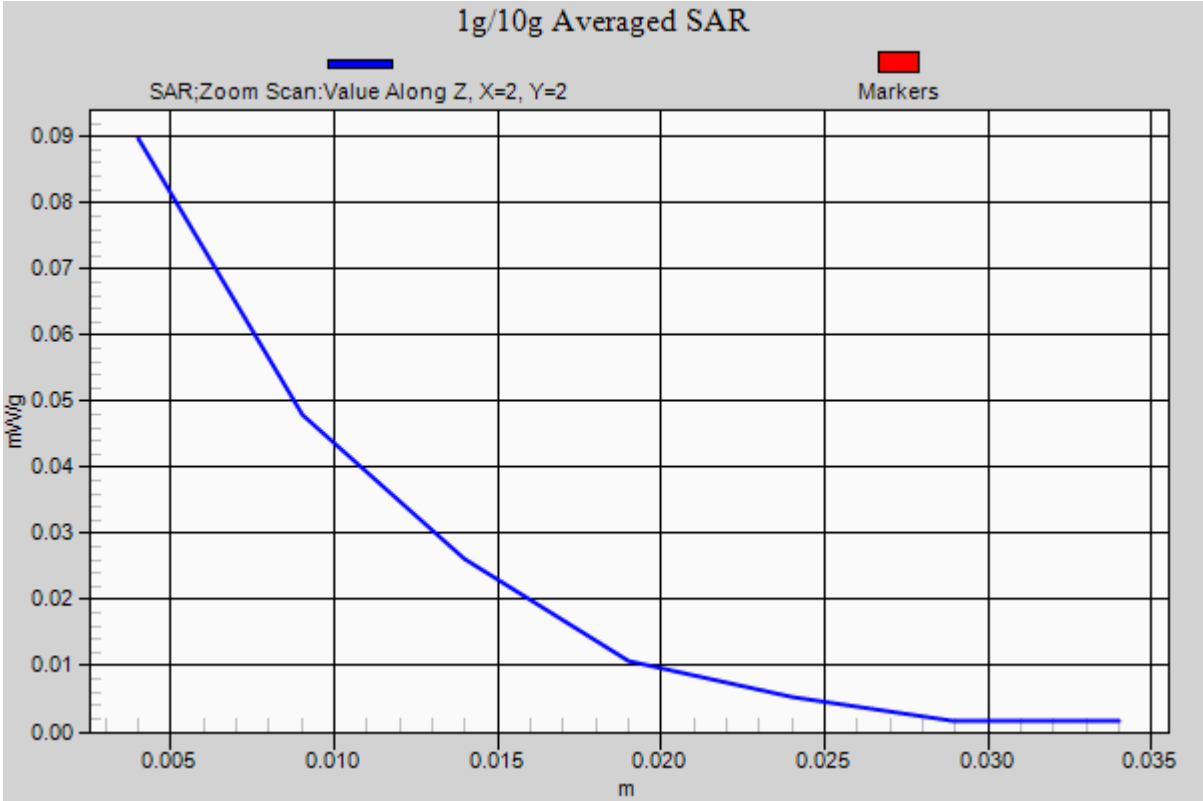
1g/10g Averaged SAR
SAR;Zoom Scan:Value Along Z, X=2, Y=2
Markers
mW/g
0.09
0.08
0.07
0.06
0.05
0.04
0.03
0.02
0.01
0.00
0.005
0.010
0.015
0.020
0.025
0.030
0.035
m