APPENDIX A: TEST DATA

Liquid Level Photo

MSL 2450MHz D=151mm

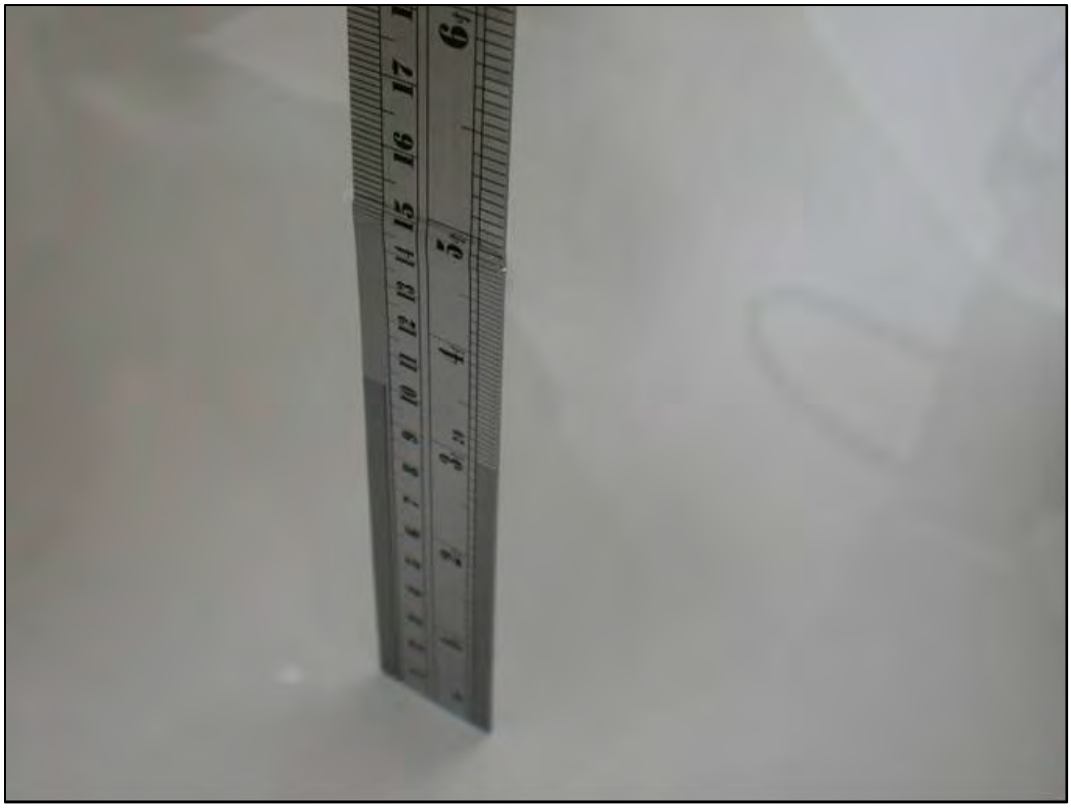

MSL 5800MHz D=153mm

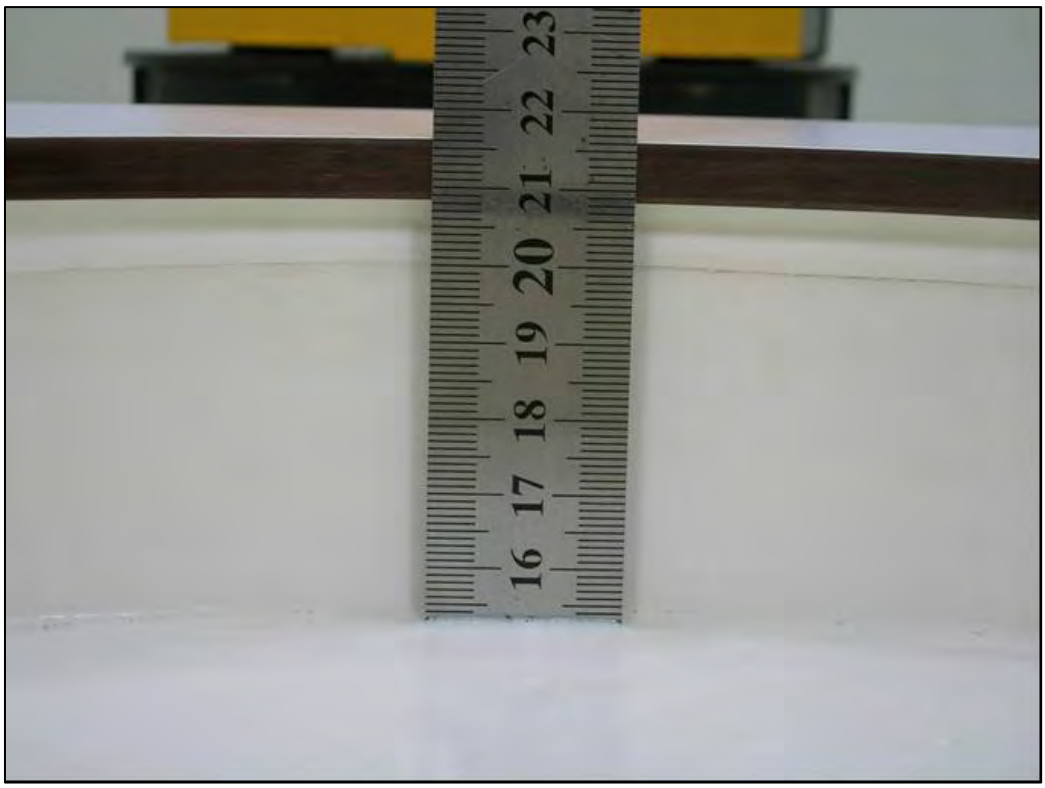

MSL 5800MHz D=150mm

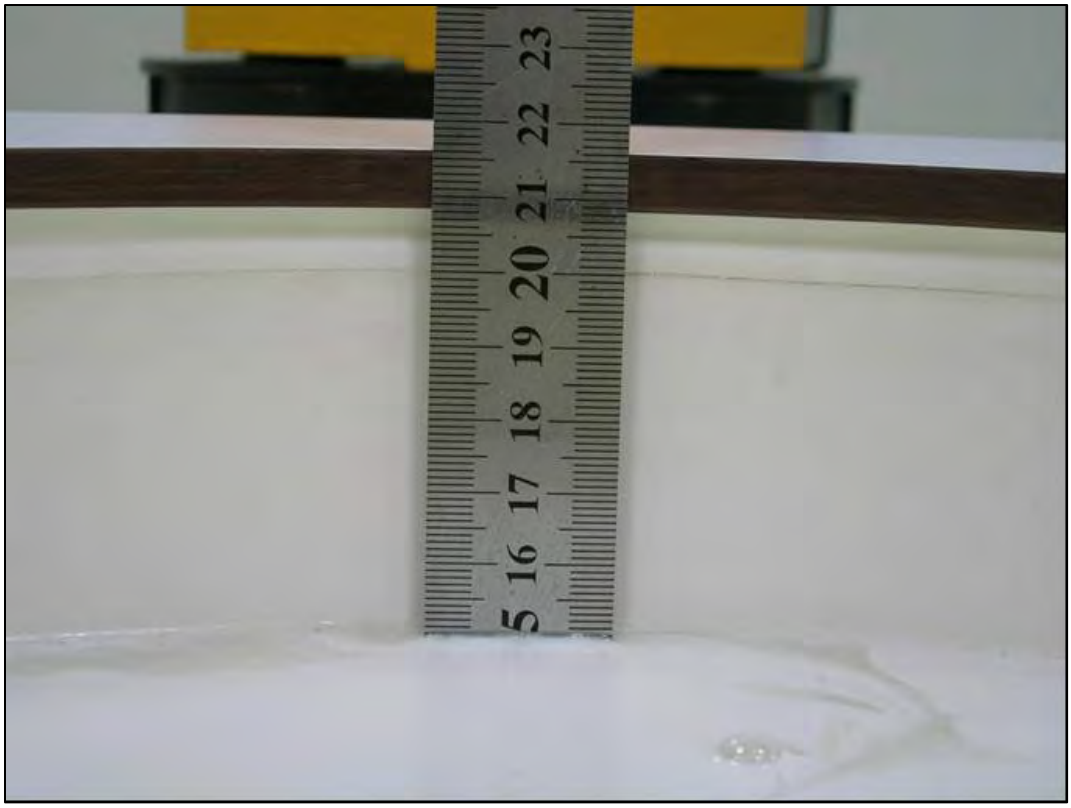

Date/Time: 2009/4/27 14:01:01

Test Laboratory: Bureau Veritas ADT

M01-11b-Ch1

DUT: Wireless-N USB Network Adapter with Dual-Band ; Type: WUSB600N ver.2

Communication System: 802.11b ; Frequency: 2412 MHz ; Duty Cycle: 1:1 ; Modulation type: DBPSK
Medium: MSL2450 Medium parameters used: f = 2412 MHz; σ = 1.95 mho/m; ε_r = 54.1; ρ = 1000 kg/m^3
Phantom section: Flat Section ; Separation distance : 5 mm (The bottom side of the EUT to the Phantom)

DASY4 Configuration:
- Probe: EX3DV3 - SN3504 ; ConvF(7.53, 7.53, 7.53) ; Calibrated: 2009/1/21
- Sensor-Surface: 3mm (Mechanical Surface Detection)
- Electronics: DAE3 Sn510 ; Calibrated: 2009/1/21
- Phantom: SAM 12 ; Type: SAM V4.0 ; Serial: TP 1202
- Measurement SW: DASY4, V4.7 Build 80 ; Postprocessing SW: SEMCAD, V1.8 Build 186

Low Channel 1/Area Scan (5x7x1): Measurement grid: dx=15mm, dy=15mm
Maximum value of SAR (measured) = 0.985 mW/g

Low Channel 1/Zoom Scan (7x7x7) (7x7x7)/Cube 0: Measurement grid: dx=5mm, dy=5mm, dz=5mm
Reference Value = 20.0 V/m
Peak SAR (extrapolated) = 2.30 W/kg
SAR(1 g) = 1 mW/g; SAR(10 g) = 0.436 mW/g
Maximum value of SAR (measured) = 1.38 mW/g

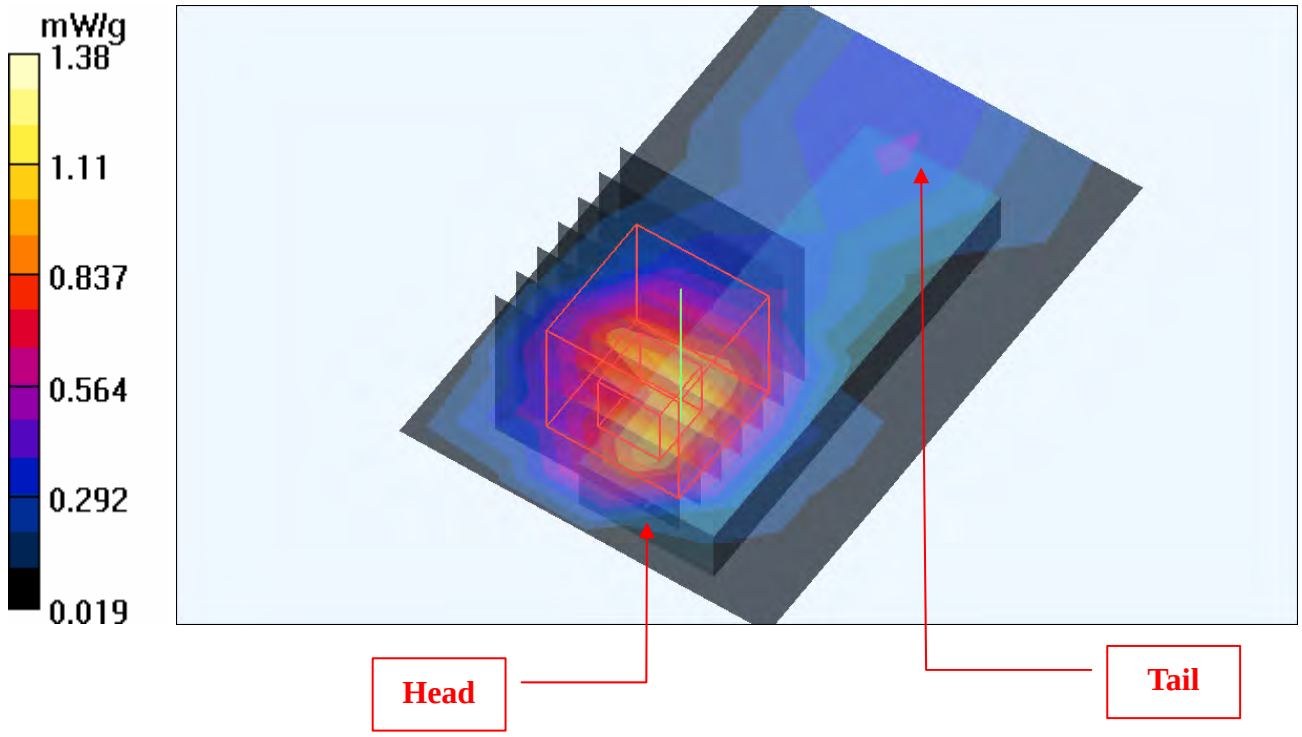

Date/Time: 2009/4/27 14:33:14

Test Laboratory: Bureau Veritas ADT

M01-11b-Ch6

DUT: Wireless-N USB Network Adapter with Dual-Band ; Type: WUSB600N ver.2

Communication System: 802.11b ; Frequency: 2437 MHz ; Duty Cycle: 1:1 ; Modulation type: DBPSK
Medium: MSL2450 Medium parameters used: f = 2437 MHz; σ = 1.99 mho/m; ε_r = 53.9; ρ = 1000 kg/m^3
Phantom section: Flat Section ; Separation distance : 5 mm (The bottom side of the EUT to the Phantom)

DASY4 Configuration:
- Probe: EX3DV3 - SN3504 ; ConvF(7.53, 7.53, 7.53) ; Calibrated: 2009/1/21
- Sensor-Surface: 3mm (Mechanical Surface Detection)
- Electronics: DAE3 Sn510 ; Calibrated: 2009/1/21
- Phantom: SAM 12 ; Type: SAM V4.0 ; Serial: TP 1202
- Measurement SW: DASY4, V4.7 Build 80 ; Postprocessing SW: SEMCAD, V1.8 Build 186

Mid Channel 6/Area Scan (5x7x1): Measurement grid: dx=15mm, dy=15mm
Maximum value of SAR (measured) = 0.796 mW/g

Mid Channel 6/Zoom Scan (7x7x7) (7x7x7)/Cube 0: Measurement grid: dx=5mm, dy=5mm, dz=5mm
Reference Value = 20.1 V/m
Peak SAR (extrapolated) = 2.42 W/kg
SAR(1 g) = 1.05 mW/g; SAR(10 g) = 0.450 mW/g
Maximum value of SAR (measured) = 1.44 mW/g

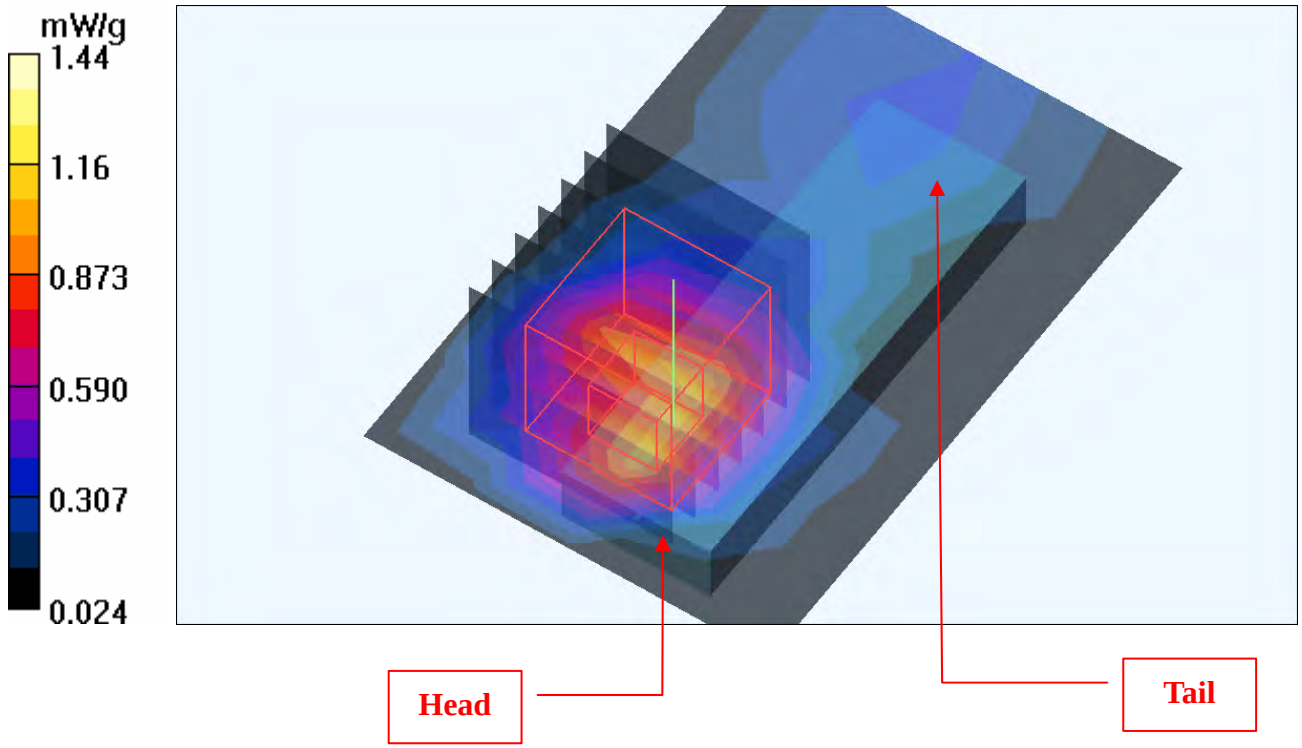

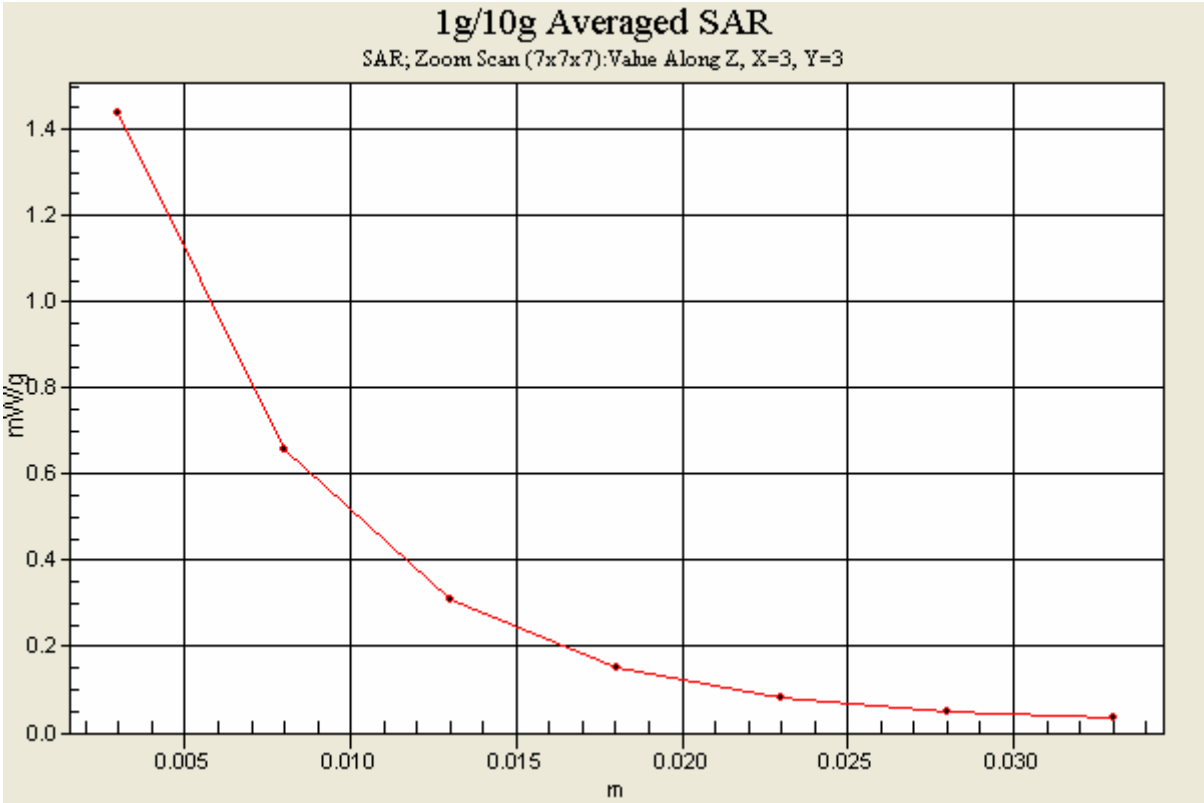
1g/10g Averaged SAR
SAR; Zoom Scan (7x7x7):Value Along Z, X=3, Y=3
mW/g
1.4
1.2
1.0
0.8
0.6
0.4
0.2
0.0
0.005
0.010
0.015
0.020
0.025
0.030
m

Date/Time: 2009/4/27 14:48:24

Test Laboratory: Bureau Veritas ADT

M01-11b-Ch11

DUT: Wireless-N USB Network Adapter with Dual-Band ; Type: WUSB600N ver.2

Communication System: 802.11b ; Frequency: 2462 MHz ; Duty Cycle: 1:1 ; Modulation type: DBPSK
Medium: MSL2450 Medium parameters used: f = 2462 MHz; σ = 2.02 mho/m; ε_r = 53.7; ρ = 1000 kg/m^3
Phantom section: Flat Section ; Separation distance : 5 mm (The bottom side of the EUT to the Phantom)

DASY4 Configuration:
- Probe: EX3DV3 - SN3504 ; ConvF(7.53, 7.53, 7.53) ; Calibrated: 2009/1/21
- Sensor-Surface: 3mm (Mechanical Surface Detection)
- Electronics: DAE3 Sn510 ; Calibrated: 2009/1/21
- Phantom: SAM 12 ; Type: SAM V4.0 ; Serial: TP 1202
- Measurement SW: DASY4, V4.7 Build 80 ; Postprocessing SW: SEMCAD, V1.8 Build 186

High Channel 11/Area Scan (5x7x1): Measurement grid: dx=15mm, dy=15mm
Maximum value of SAR (measured) = 0.734 mW/g

High Channel 11/Zoom Scan (7x7x7) (7x7x7)/Cube 0: Measurement grid: dx=5mm, dy=5mm, dz=5mm
Reference Value = 19.4 V/m
Peak SAR (extrapolated) = 2.25 W/kg
SAR(1 g) = 0.966 mW/g; SAR(10 g) = 0.411 mW/g
Maximum value of SAR (measured) = 1.34 mW/g

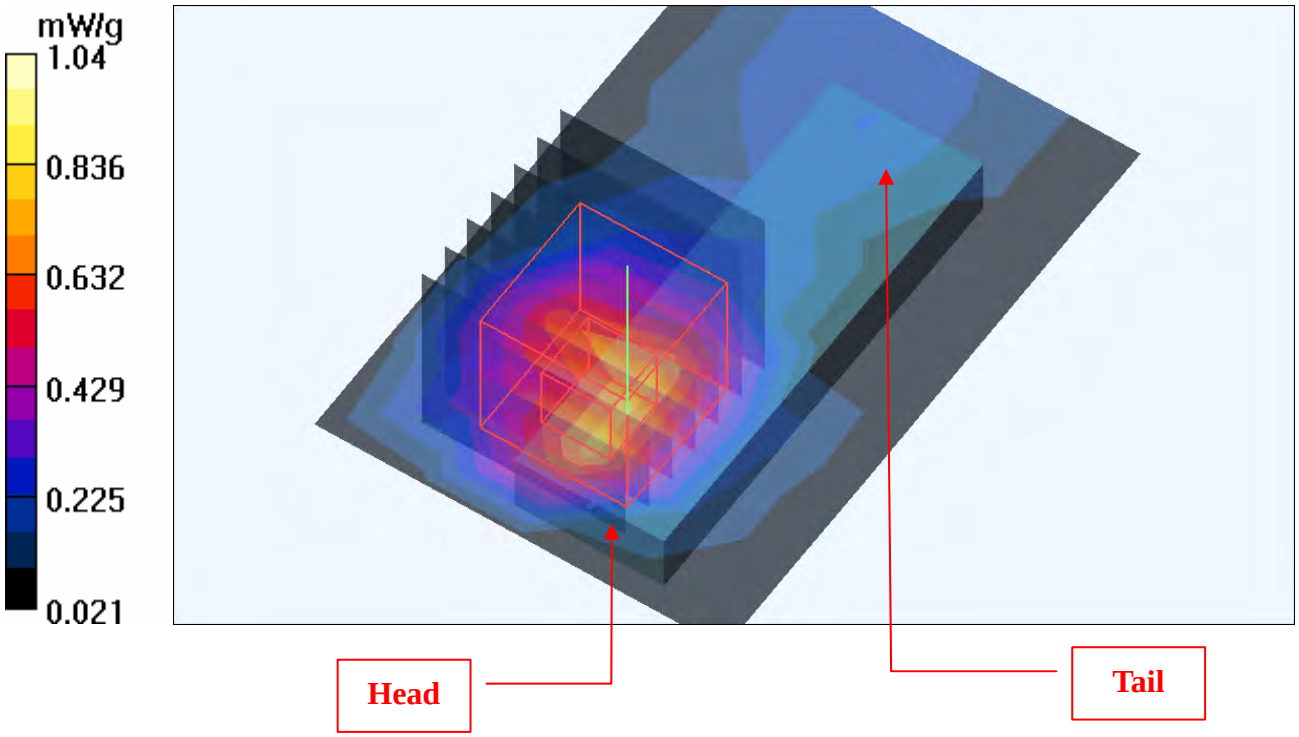

Date/Time: 2009/4/27 15:04:25

Test Laboratory: Bureau Veritas ADT

M02-11g-Ch1

DUT: Wireless-N USB Network Adapter with Dual-Band ; Type: WUSB600N ver.2

Communication System: 802.11g ; Frequency: 2412 MHz ; Duty Cycle: 1:1 ; Modulation type: BPSK
Medium: MSL2450 Medium parameters used: f = 2412 MHz; σ = 1.95 mho/m; ε_r = 54.1; ρ = 1000 kg/m^3
Phantom section: Flat Section ; Separation distance : 5 mm (The bottom side of the EUT to the Phantom)

DASY4 Configuration:
- Probe: EX3DV3 - SN3504 ; ConvF(7.53, 7.53, 7.53) ; Calibrated: 2009/1/21
- Sensor-Surface: 3mm (Mechanical Surface Detection)
- Electronics: DAE3 Sn510 ; Calibrated: 2009/1/21
- Phantom: SAM 12 ; Type: SAM V4.0 ; Serial: TP 1202
- Measurement SW: DASY4, V4.7 Build 80 ; Postprocessing SW: SEMCAD, V1.8 Build 186

Low Channel 1/Area Scan (5x7x1): Measurement grid: dx=15mm, dy=15mm
Maximum value of SAR (measured) = 0.399 mW/g

Low Channel 1/Zoom Scan (7x7x7) (7x7x7)/Cube 0: Measurement grid: dx=5mm, dy=5mm, dz=5mm
Reference Value = 14.2 V/m
Peak SAR (extrapolated) = 1.14 W/kg
SAR(1 g) = 0.504 mW/g; SAR(10 g) = 0.223 mW/g
Maximum value of SAR (measured) = 0.699 mW/g

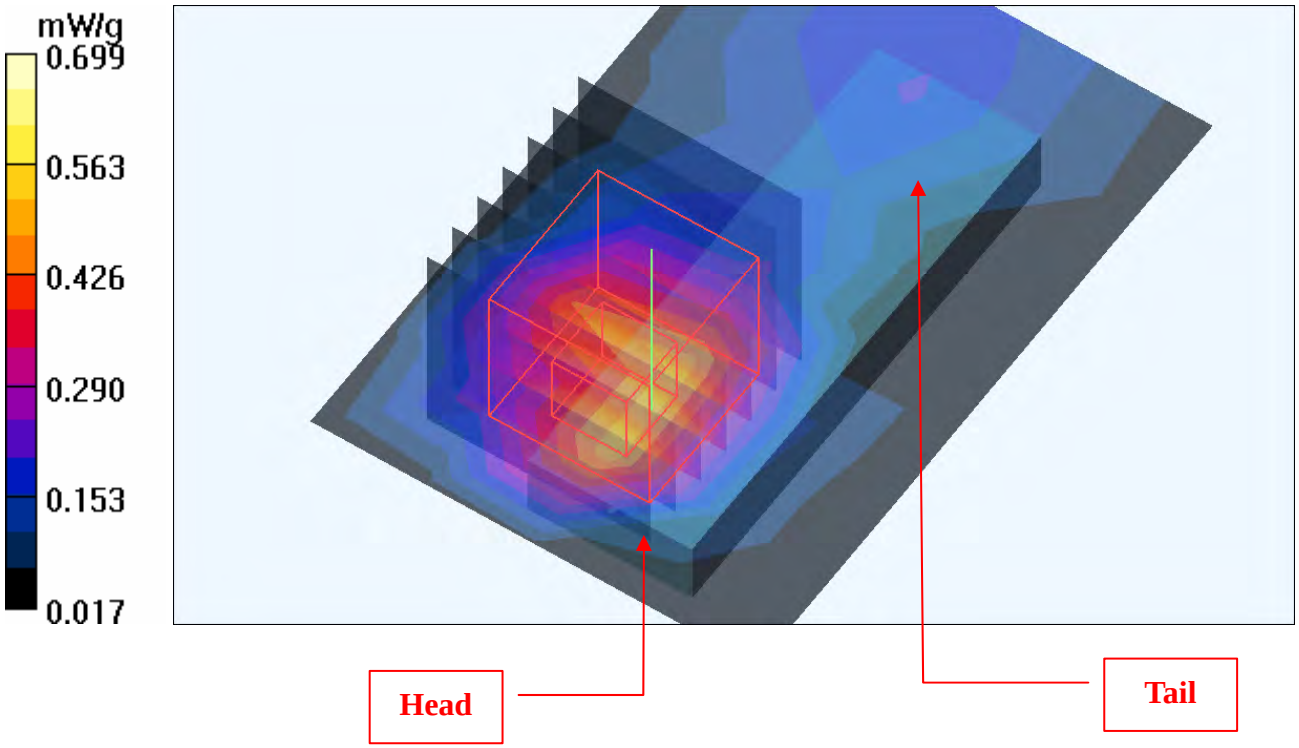

Date/Time: 2009/4/27 15:19:59

Test Laboratory: Bureau Veritas ADT

M02-11g-Ch6

DUT: Wireless-N USB Network Adapter with Dual-Band ; Type: WUSB600N ver.2

Communication System: 802.11g ; Frequency: 2437 MHz ; Duty Cycle: 1:1 ; Modulation type: BPSK
Medium: MSL2450 Medium parameters used: f = 2437 MHz; σ = 1.99 mho/m; ε_r = 53.9; ρ = 1000 kg/m^3
Phantom section: Flat Section ; Separation distance : 5 mm (The bottom side of the EUT to the Phantom)

DASY4 Configuration:
- Probe: EX3DV3 - SN3504 ; ConvF(7.53, 7.53, 7.53) ; Calibrated: 2009/1/21
- Sensor-Surface: 3mm (Mechanical Surface Detection)
- Electronics: DAE3 Sn510 ; Calibrated: 2009/1/21
- Phantom: SAM 12 ; Type: SAM V4.0 ; Serial: TP 1202
- Measurement SW: DASY4, V4.7 Build 80 ; Postprocessing SW: SEMCAD, V1.8 Build 186

Mid Channel 6/Area Scan (5x7x1): Measurement grid: dx=15mm, dy=15mm
Maximum value of SAR (measured) = 0.767 mW/g

Mid Channel 6/Zoom Scan (7x7x7) (7x7x7)/Cube 0: Measurement grid: dx=5mm, dy=5mm, dz=5mm
Reference Value = 19.4 V/m
Peak SAR (extrapolated) = 2.23 W/kg
SAR(1 g) = 0.964 mW/g; SAR(10 g) = 0.414 mW/g
Maximum value of SAR (measured) = 1.33 mW/g

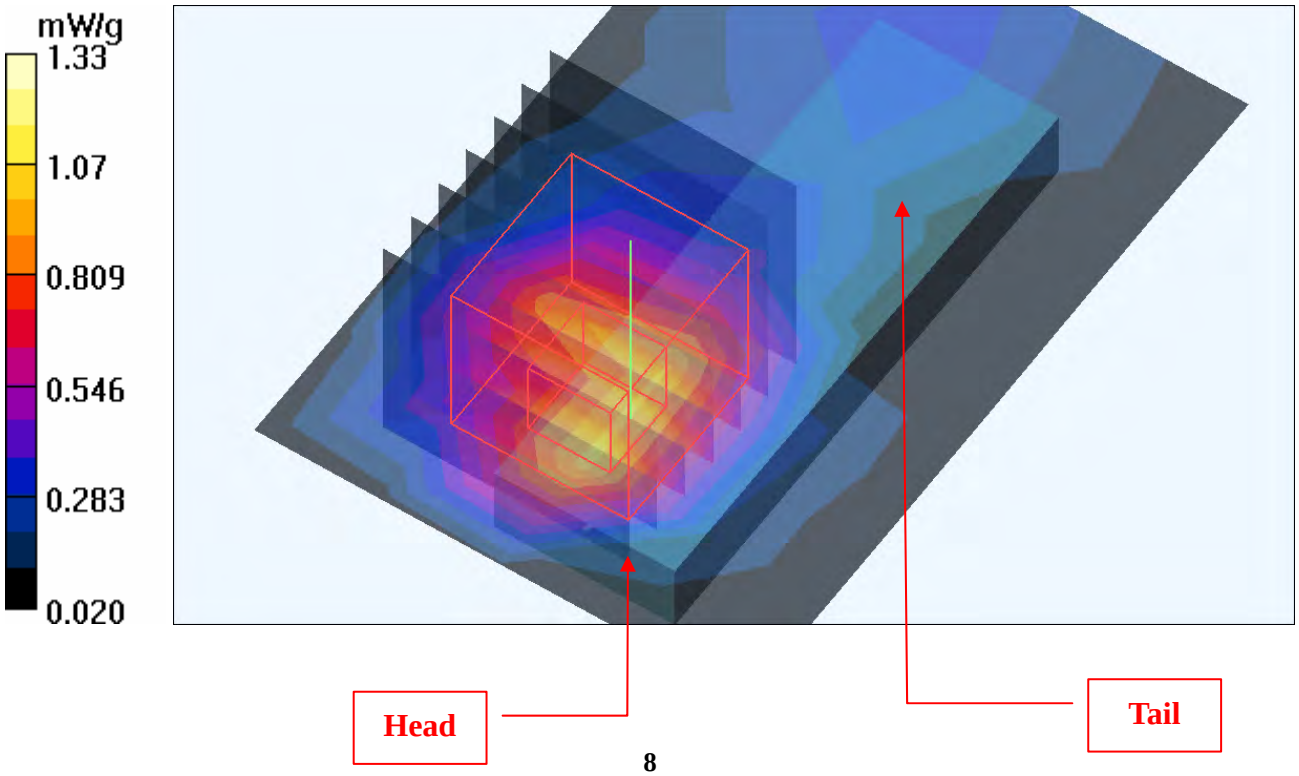

Date/Time: 2009/4/27 15:35:04

Test Laboratory: Bureau Veritas ADT

M02-11g-Ch11

DUT: Wireless-N USB Network Adapter with Dual-Band ; Type: WUSB600N ver.2

Communication System: 802.11g ; Frequency: 2462 MHz ; Duty Cycle: 1:1 ; Modulation type: BPSK
Medium: MSL2450 Medium parameters used: f = 2462 MHz; σ = 2.02 mho/m; ε_r = 53.7; ρ = 1000 kg/m^3
Phantom section: Flat Section ; Separation distance : 5 mm (The bottom side of the EUT to the Phantom)

DASY4 Configuration:
- Probe: EX3DV3 - SN3504 ; ConvF(7.53, 7.53, 7.53) ; Calibrated: 2009/1/21
- Sensor-Surface: 3mm (Mechanical Surface Detection)
- Electronics: DAE3 Sn510 ; Calibrated: 2009/1/21
- Phantom: SAM 12 ; Type: SAM V4.0 ; Serial: TP 1202
- Measurement SW: DASY4, V4.7 Build 80 ; Postprocessing SW: SEMCAD, V1.8 Build 186

High Channel 11/Area Scan (5x7x1): Measurement grid: dx=15mm, dy=15mm
Maximum value of SAR (measured) = 0.432 mW/g

High Channel 11/Zoom Scan (7x7x7) (7x7x7)/Cube 0: Measurement grid: dx=5mm, dy=5mm, dz=5mm
Reference Value = 14.9 V/m
Peak SAR (extrapolated) = 1.33 W/kg
SAR(1 g) = 0.577 mW/g; SAR(10 g) = 0.249 mW/g
Maximum value of SAR (measured) = 0.800 mW/g

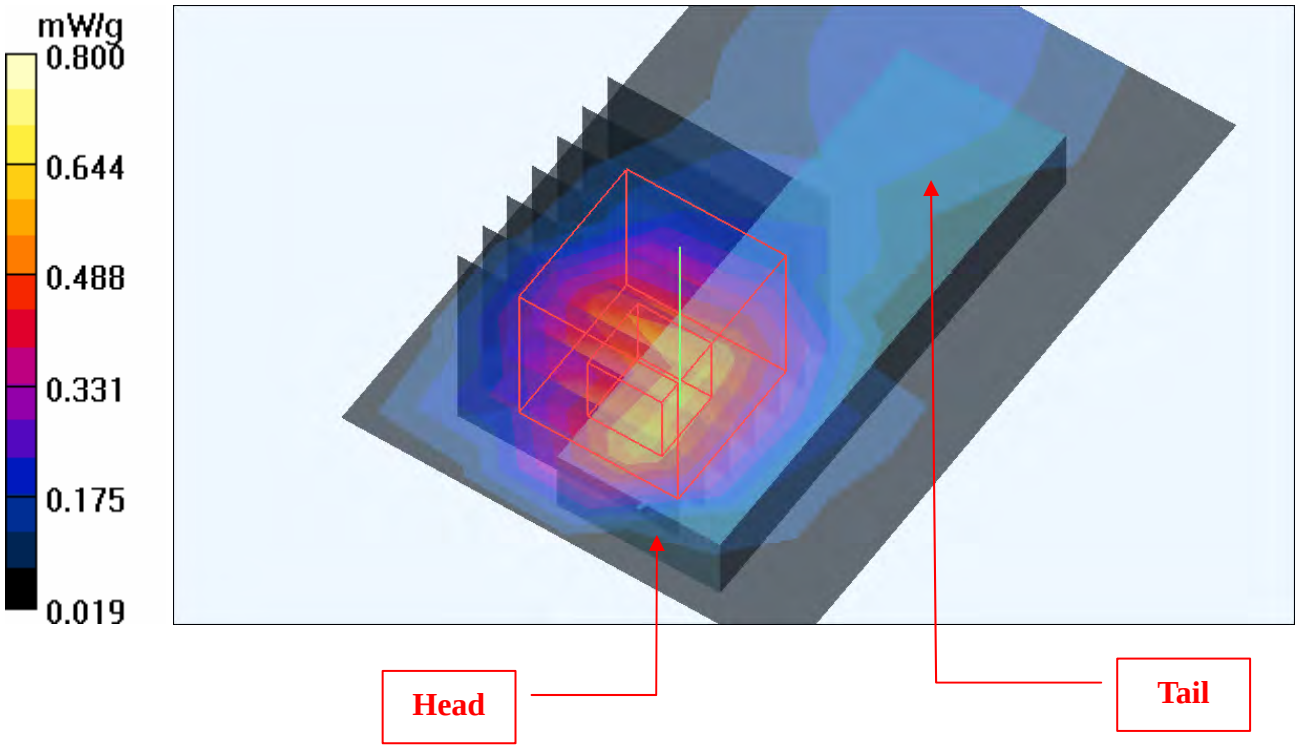

Date/Time: 2009/4/27 16:07:08

Test Laboratory: Bureau Veritas ADT

M03-11N 20M-Ch6

DUT: Wireless-N USB Network Adapter with Dual-Band ; Type: WUSB600N ver.2

Communication System: 2.4G 11n span20 ; Frequency: 2437 MHz ; Duty Cycle: 1:1 ; Modulation type: BPSK
Medium: MSL2450 Medium parameters used: f = 2437 MHz; σ = 1.99 mho/m; ε_r = 53.9; ρ = 1000 kg/m^3
Phantom section: Flat Section ; Separation distance : 5 mm (The bottom side of the EUT to the Phantom)

DASY4 Configuration:
- Probe: EX3DV3 - SN3504 ; ConvF(7.53, 7.53, 7.53) ; Calibrated: 2009/1/21
- Sensor-Surface: 3mm (Mechanical Surface Detection)
- Electronics: DAE3 Sn510 ; Calibrated: 2009/1/21
- Phantom: SAM 12 ; Type: SAM V4.0 ; Serial: TP 1202
- Measurement SW: DASY4, V4.7 Build 80 ; Postprocessing SW: SEMCAD, V1.8 Build 186

Mid Channel 6/Area Scan (5x7x1): Measurement grid: dx=15mm, dy=15mm
Maximum value of SAR (measured) = 0.610 mW/g

Mid Channel 6/Zoom Scan (7x7x7) (7x7x7)/Cube 0: Measurement grid: dx=5mm, dy=5mm, dz=5mm
Reference Value = 17.2 V/m
Peak SAR (extrapolated) = 1.67 W/kg
SAR(1 g) = 0.716 mW/g; SAR(10 g) = 0.311 mW/g
Maximum value of SAR (measured) = 0.961 mW/g

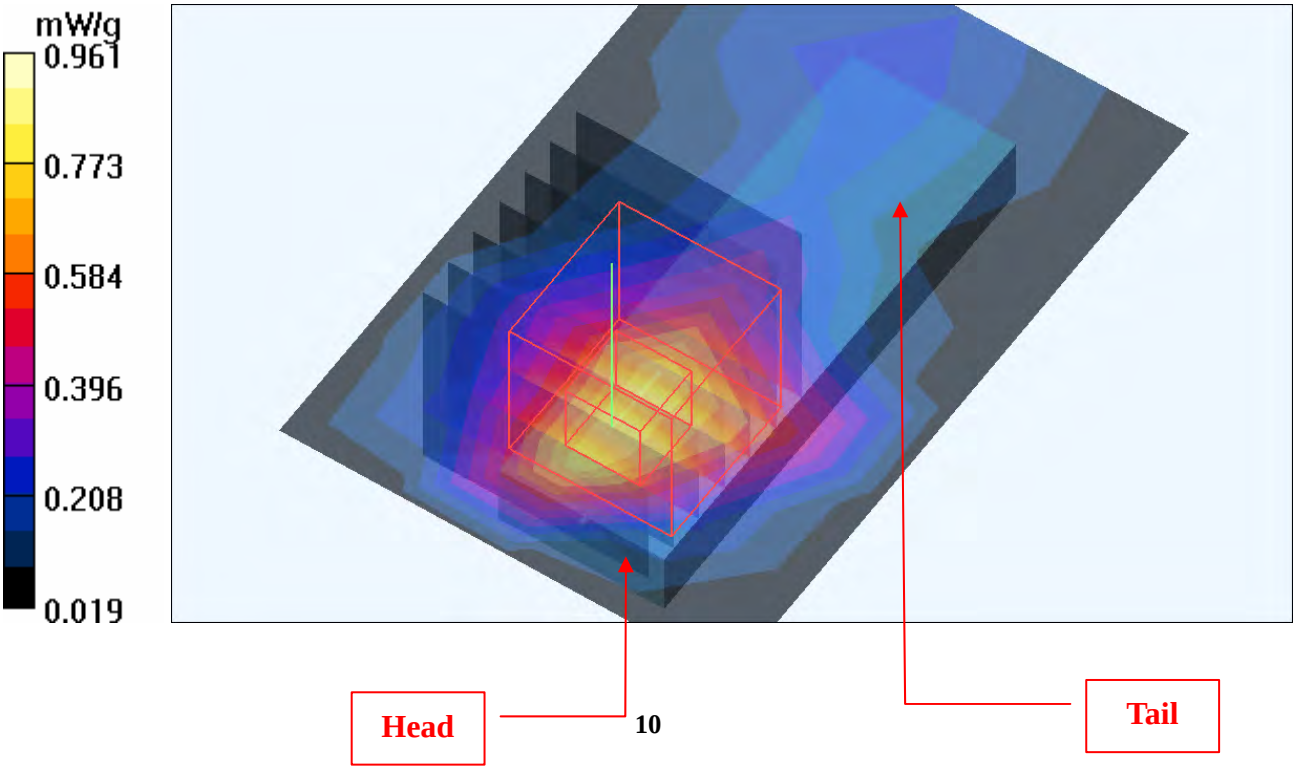

Date/Time: 2009/4/27 16:24:31

Test Laboratory: Bureau Veritas ADT

M04-11N 40M-Ch4

DUT: Wireless-N USB Network Adapter with Dual-Band ; Type: WUSB600N ver.2

Communication System: 802.11n 40MHz ; Frequency: 2437 MHz ; Duty Cycle: 1:1 ; Modulation type: BPSK
Medium: MSL2450 Medium parameters used: f = 2437 MHz; σ = 1.99 mho/m; ε_r = 53.9; ρ = 1000 kg/m^3
Phantom section: Flat Section ; Separation distance : 5 mm (The bottom side of the EUT to the Phantom)

DASY4 Configuration:
- Probe: EX3DV3 - SN3504 ; ConvF(7.53, 7.53, 7.53) ; Calibrated: 2009/1/21
- Sensor-Surface: 3mm (Mechanical Surface Detection)
- Electronics: DAE3 Sn510 ; Calibrated: 2009/1/21
- Phantom: SAM 12 ; Type: SAM V4.0 ; Serial: TP 1202
- Measurement SW: DASY4, V4.7 Build 80 ; Postprocessing SW: SEMCAD, V1.8 Build 186

Mid Channel 4/Area Scan (5x7x1): Measurement grid: dx=15mm, dy=15mm
Maximum value of SAR (measured) = 0.651 mW/g

Mid Channel 4/Zoom Scan (7x7x7) (7x7x7)/Cube 0: Measurement grid: dx=5mm, dy=5mm, dz=5mm
Reference Value = 18.7 V/m
Peak SAR (extrapolated) = 1.73 W/kg
SAR(1 g) = 0.746 mW/g; SAR(10 g) = 0.331 mW/g
Maximum value of SAR (measured) = 0.989 mW/g

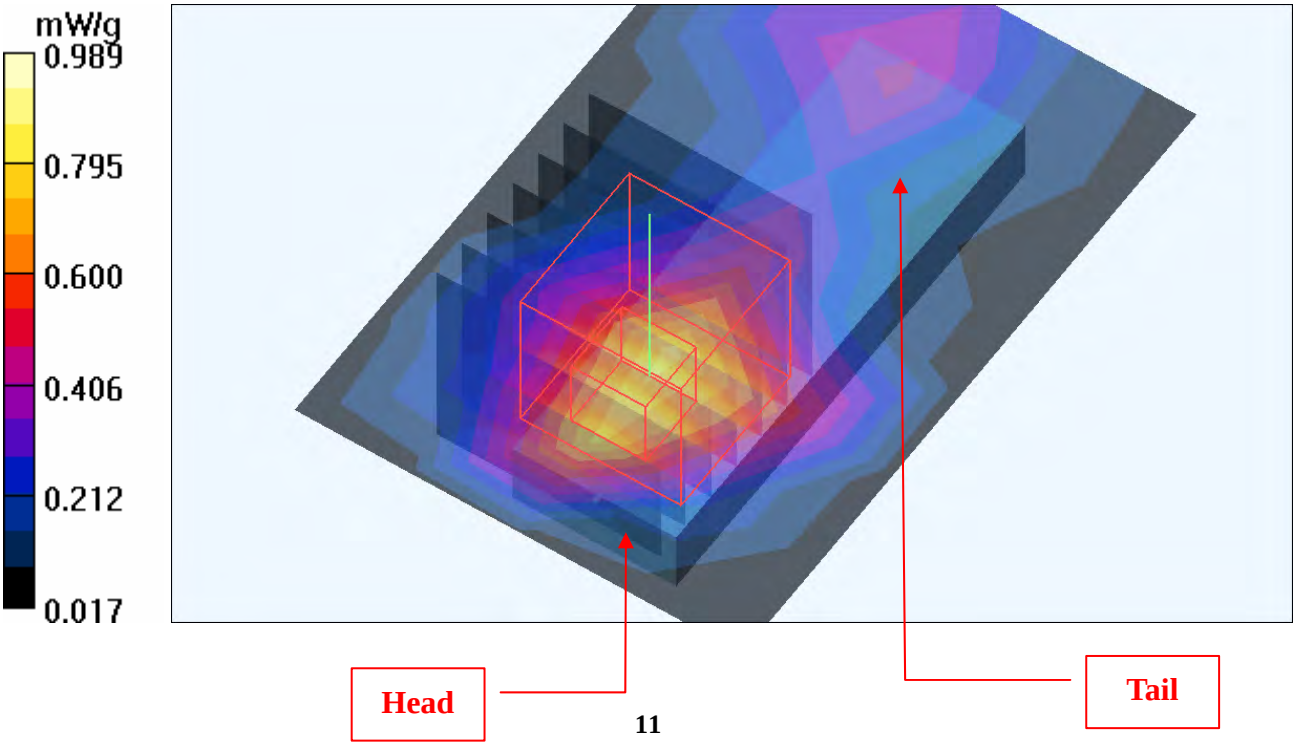

Date/Time: 2009/4/27 17:14:31

Test Laboratory: Bureau Veritas ADT

M05-11b-Ch6

DUT: Wireless-N USB Network Adapter with Dual-Band ; Type: WUSB600N ver.2

Communication System: 802.11b ; Frequency: 2437 MHz ; Duty Cycle: 1:1 ; Modulation type: DBPSK
Medium: MSL2450 Medium parameters used: f = 2437 MHz; σ = 1.99 mho/m; ε_r = 53.9; ρ = 1000 kg/m^3
Phantom section: Flat Section ; Separation distance : 5 mm (The edge side of the EUT to the Phantom)
DASY4 Configuration:
- Probe: EX3DV3 - SN3504 ; ConvF(7.53, 7.53, 7.53) ; Calibrated: 2009/1/21
- Sensor-Surface: 3mm (Mechanical Surface Detection)
- Electronics: DAE3 Sn510 ; Calibrated: 2009/1/21
- Phantom: SAM 12 ; Type: SAM V4.0 ; Serial: TP 1202
- Measurement SW: DASY4, V4.7 Build 80 ; Postprocessing SW: SEMCAD, V1.8 Build 186

Mid Channel 6/Area Scan (5x7x1): Measurement grid: dx=15mm, dy=15mm
Maximum value of SAR (measured) = 0.171 mW/g

Mid Channel 6/Zoom Scan (7x7x7) (7x7x7)/Cube 0: Measurement grid: dx=5mm, dy=5mm, dz=5mm
Reference Value = 7.61 V/m
Peak SAR (extrapolated) = 0.275 W/kg
SAR(1 g) = 0.135 mW/g; SAR(10 g) = 0.077 mW/g
Maximum value of SAR (measured) = 0.168 mW/g

Mid Channel 6/Zoom Scan (7x7x7) (7x7x7)/Cube 1: Measurement grid: dx=5mm, dy=5mm, dz=5mm
Reference Value = 7.61 V/m
Peak SAR (extrapolated) = 0.186 W/kg
SAR(1 g) = 0.098 mW/g; SAR(10 g) = 0.056 mW/g
Maximum value of SAR (measured) = 0.125 mW/g

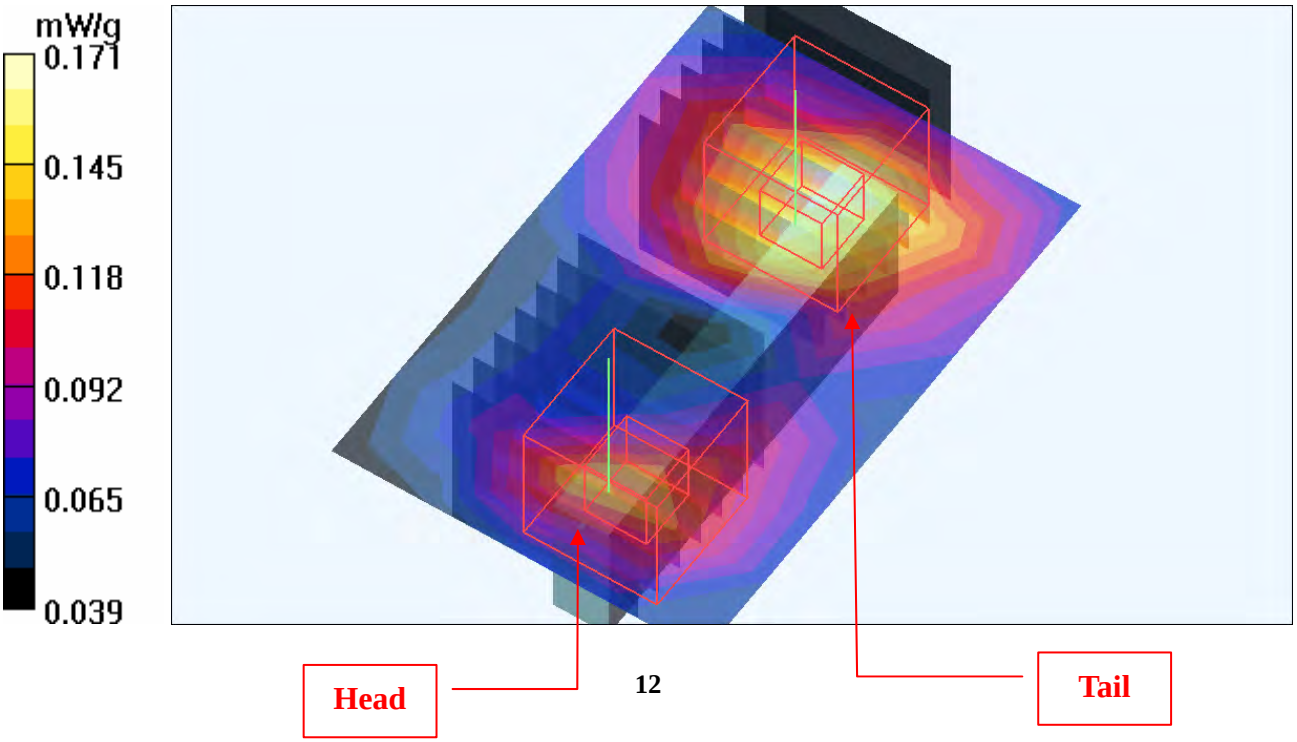

Date/Time: 2009/4/27 17:46:13

Test Laboratory: Bureau Veritas ADT

M06-11g-Ch6

DUT: Wireless-N USB Network Adapter with Dual-Band ; Type: WUSB600N ver.2

Communication System: 802.11g ; Frequency: 2437 MHz ; Duty Cycle: 1:1 ; Modulation type: BPSK
Medium: MSL2450 Medium parameters used: f = 2437 MHz; σ = 1.99 mho/m; ε_r = 53.9; ρ = 1000 kg/m^3
Phantom section: Flat Section ; Separation distance : 5 mm (The edge side of the EUT to the Phantom)
DASY4 Configuration:
- Probe: EX3DV3 - SN3504 ; ConvF(7.53, 7.53, 7.53) ; Calibrated: 2009/1/21
- Sensor-Surface: 3mm (Mechanical Surface Detection)
- Electronics: DAE3 Sn510 ; Calibrated: 2009/1/21
- Phantom: SAM 12 ; Type: SAM V4.0 ; Serial: TP 1202
- Measurement SW: DASY4, V4.7 Build 80 ; Postprocessing SW: SEMCAD, V1.8 Build 186

Mid Channel 6/Area Scan (5x7x1): Measurement grid: dx=15mm, dy=15mm
Maximum value of SAR (measured) = 0.129 mW/g

Mid Channel 6/Zoom Scan (7x7x7) (7x7x7)/Cube 0: Measurement grid: dx=5mm, dy=5mm, dz=5mm
Reference Value = 8.01 V/m
Peak SAR (extrapolated) = 0.223 W/kg
SAR(1 g) = 0.114 mW/g; SAR(10 g) = 0.067 mW/g
Maximum value of SAR (measured) = 0.139 mW/g

Mid Channel 6/Zoom Scan (7x7x7) (7x7x7)/Cube 1: Measurement grid: dx=5mm, dy=5mm, dz=5mm
Reference Value = 8.01 V/m
Peak SAR (extrapolated) = 0.166 W/kg
SAR(1 g) = 0.088 mW/g; SAR(10 g) = 0.051 mW/g
Maximum value of SAR (measured) = 0.105 mW/g

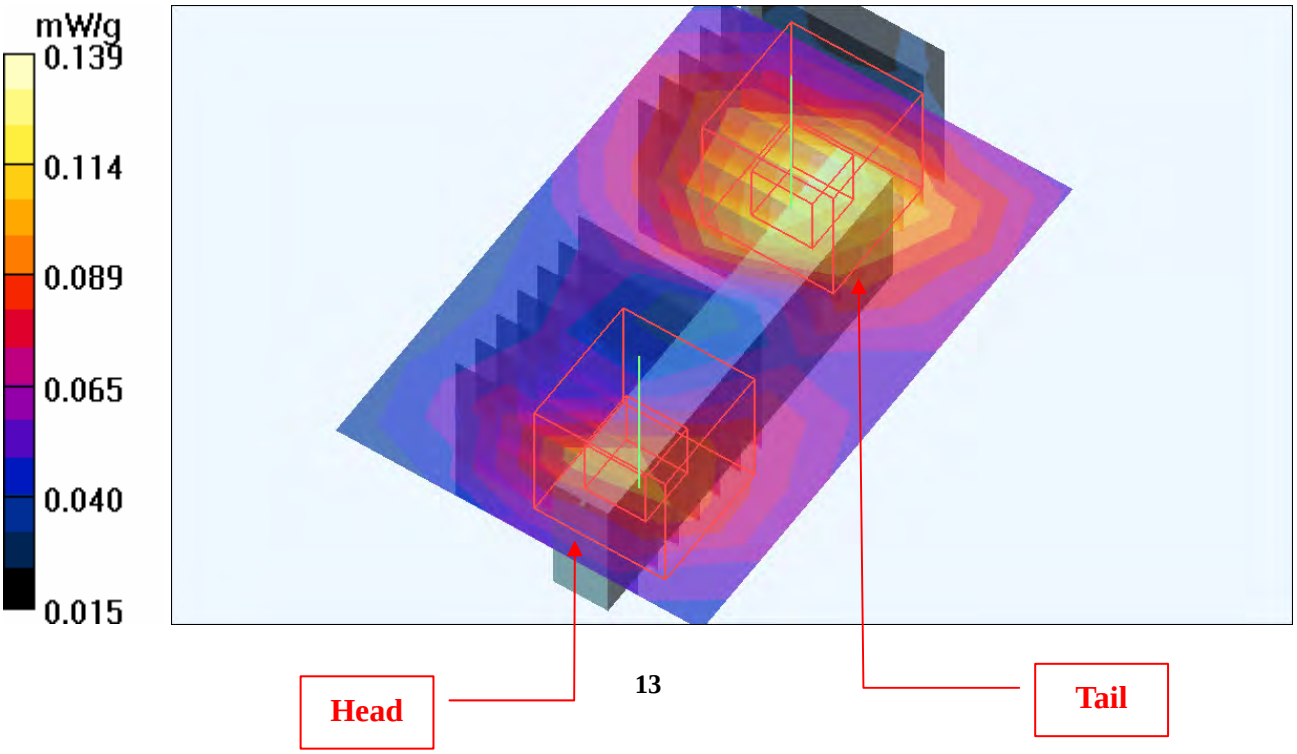

Date/Time: 2009/4/27 18:21:04

Test Laboratory: Bureau Veritas ADT

M07-11N 20M-Ch6

DUT: Wireless-N USB Network Adapter with Dual-Band ; Type: WUSB600N ver.2

Communication System: 2.4G 11n span20 ; Frequency: 2437 MHz ; Duty Cycle: 1:1 ; Modulation type: BPSK

Medium: MSL2450 Medium parameters used: f = 2437 MHz; σ = 1.99 mho/m; ε_r = 53.9; ρ = 1000 kg/m^3

Phantom section: Flat Section ; Separation distance : 5 mm (The edge side of the EUT to the Phantom)

DASY4 Configuration:

- Probe: EX3DV3 - SN3504 ; ConvF(7.53, 7.53, 7.53) ; Calibrated: 2009/1/21
- Sensor-Surface: 3mm (Mechanical Surface Detection)
- Electronics: DAE3 Sn510 ; Calibrated: 2009/1/21
- Phantom: SAM 12 ; Type: SAM V4.0 ; Serial: TP 1202
- Measurement SW: DASY4, V4.7 Build 80 ; Postprocessing SW: SEMCAD, V1.8 Build 186

Mid Channel 6/Area Scan (5x7x1): Measurement grid: dx=15mm, dy=15mm

Maximum value of SAR (measured) = 0.206 mW/g

Mid Channel 6/Zoom Scan (7x7x7) (7x7x7)/Cube 0: Measurement grid: dx=5mm, dy=5mm, dz=5mm

Reference Value = 10.1 V/m

Peak SAR (extrapolated) = 0.302 W/kg

SAR(1 g) = 0.144 mW/g; SAR(10 g) = 0.073 mW/g

Maximum value of SAR (measured) = 0.193 mW/g

Mid Channel 6/Zoom Scan (7x7x7) (7x7x7)/Cube 1: Measurement grid: dx=5mm, dy=5mm, dz=5mm

Reference Value = 10.1 V/m

Peak SAR (extrapolated) = 0.307 W/kg

SAR(1 g) = 0.159 mW/g; SAR(10 g) = 0.088 mW/g

Maximum value of SAR (measured) = 0.199 mW/g

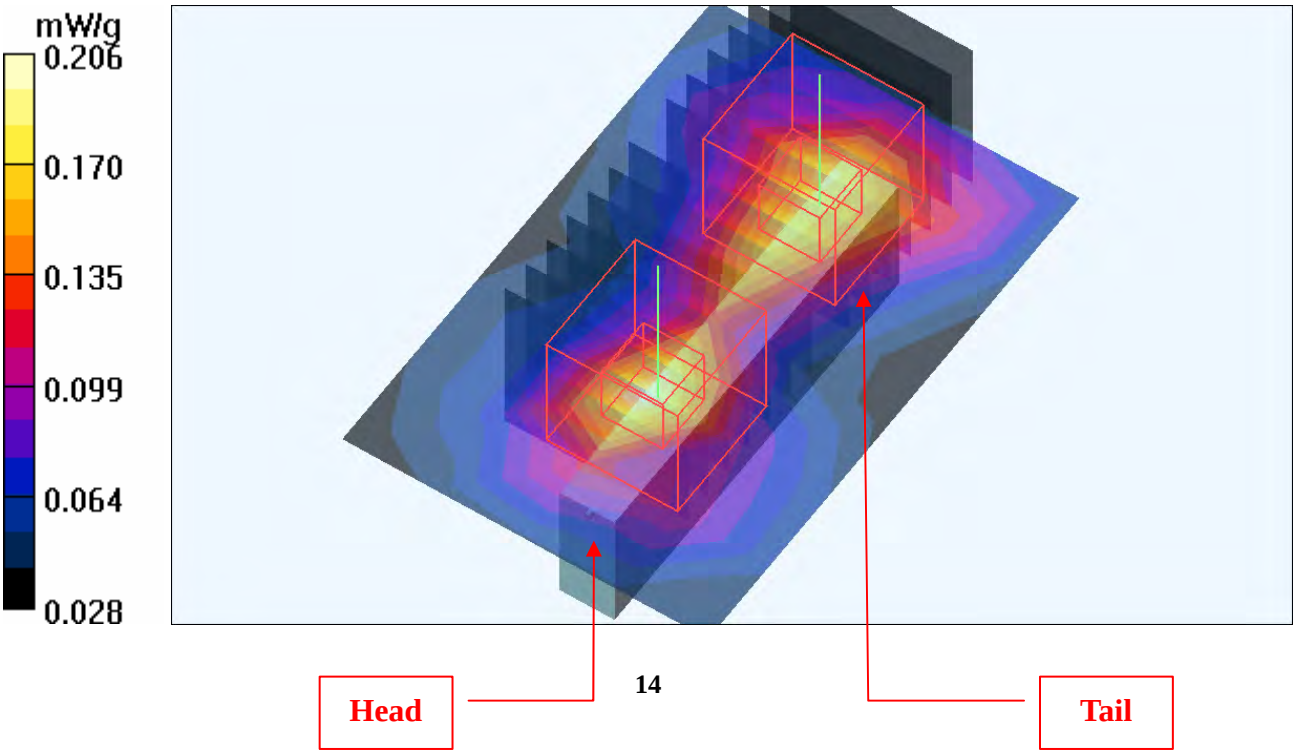

Date/Time: 2009/4/27 18:49:50

Test Laboratory: Bureau Veritas ADT

M08-11N 40M-Ch4

DUT: Wireless-N USB Network Adapter with Dual-Band ; Type: WUSB600N ver.2

Communication System: 802.11n 40MHz ; Frequency: 2437 MHz ; Duty Cycle: 1:1 ; Modulation type: BPSK

Medium: MSL2450 Medium parameters used: f = 2437 MHz; σ = 1.99 mho/m; ε_r = 53.9; ρ = 1000 kg/m^3

Phantom section: Flat Section ; Separation distance : 5 mm (The edge side of the EUT to the Phantom)

DASY4 Configuration:

- Probe: EX3DV3 - SN3504 ; ConvF(7.53, 7.53, 7.53) ; Calibrated: 2009/1/21
- Sensor-Surface: 3mm (Mechanical Surface Detection)
- Electronics: DAE3 Sn510 ; Calibrated: 2009/1/21
- Phantom: SAM 12 ; Type: SAM V4.0 ; Serial: TP 1202
- Measurement SW: DASY4, V4.7 Build 80 ; Postprocessing SW: SEMCAD, V1.8 Build 186

Mid Channel 4/Area Scan (5x7x1): Measurement grid: dx=15mm, dy=15mm

Maximum value of SAR (measured) = 0.235 mW/g

Mid Channel 4/Zoom Scan (7x7x7) (7x7x7)/Cube 0: Measurement grid: dx=5mm, dy=5mm, dz=5mm

Reference Value = 10.6 V/m

Peak SAR (extrapolated) = 0.351 W/kg

SAR(1 g) = 0.187 mW/g; SAR(10 g) = 0.101 mW/g

Maximum value of SAR (measured) = 0.237 mW/g

Mid Channel 4/Zoom Scan (7x7x7) (7x7x7)/Cube 1: Measurement grid: dx=5mm, dy=5mm, dz=5mm

Reference Value = 10.6 V/m

Peak SAR (extrapolated) = 0.332 W/kg

SAR(1 g) = 0.160 mW/g; SAR(10 g) = 0.080 mW/g

Maximum value of SAR (measured) = 0.213 mW/g

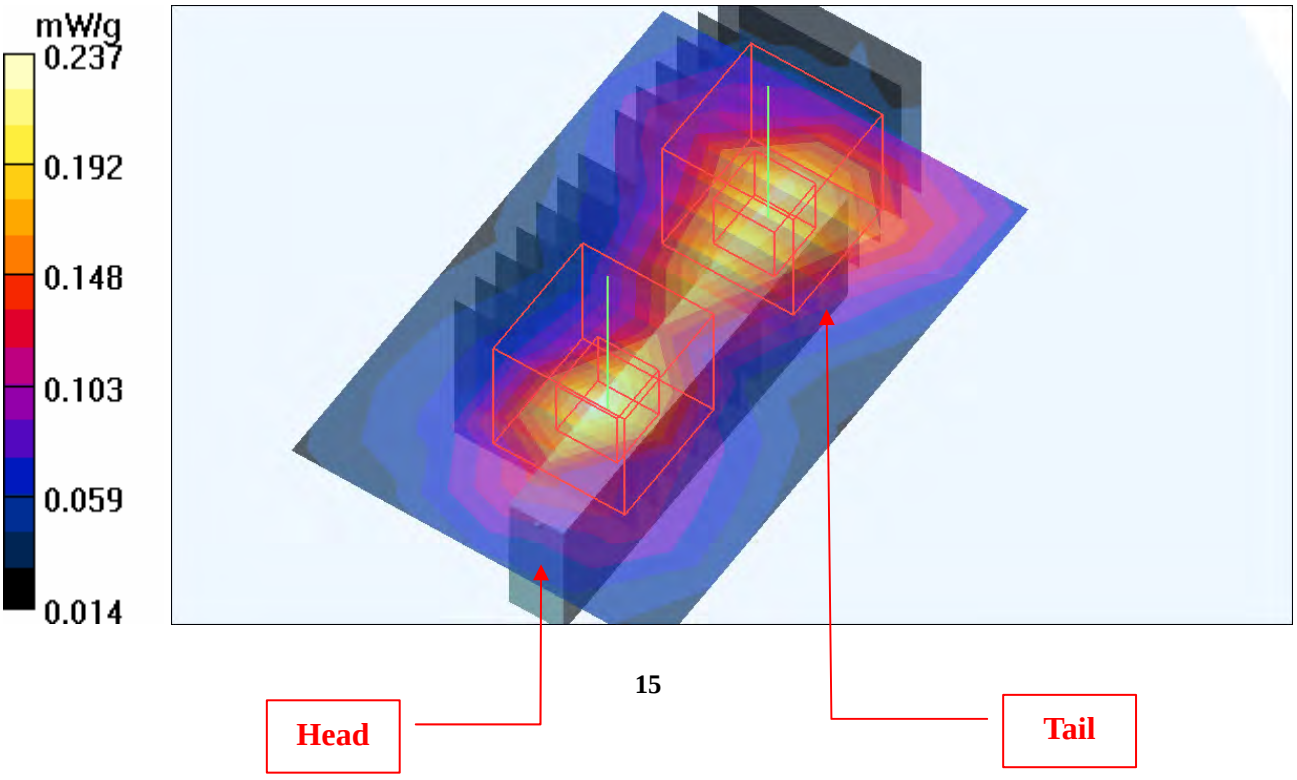

Date/Time: 2009/4/27 19:44:43

Test Laboratory: Bureau Veritas ADT

M09-11b-Ch1

DUT: Wireless-N USB Network Adapter with Dual-Band ; Type: WUSB600N ver.2

Communication System: 802.11b ; Frequency: 2412 MHz ; Duty Cycle: 1:1 ; Modulation type: DBPSK
Medium: MSL2450 Medium parameters used: f = 2412 MHz; σ = 1.95 mho/m; ε_r = 54.1; ρ = 1000 kg/m^3
Phantom section: Flat Section ; Separation distance : 5 mm (The front side of the EUT to the Phantom)

DASY4 Configuration:
- Probe: EX3DV3 - SN3504 ; ConvF(7.53, 7.53, 7.53) ; Calibrated: 2009/1/21
- Sensor-Surface: 3mm (Mechanical Surface Detection)
- Electronics: DAE3 Sn510 ; Calibrated: 2009/1/21
- Phantom: SAM 12 ; Type: SAM V4.0 ; Serial: TP 1202
- Measurement SW: DASY4, V4.7 Build 80 ; Postprocessing SW: SEMCAD, V1.8 Build 186

Low Channel 1/Area Scan (5x7x1): Measurement grid: dx=15mm, dy=15mm
Maximum value of SAR (measured) = 0.789 mW/g

Low Channel 1/Zoom Scan (7x7x7) (7x7x7)/Cube 0: Measurement grid: dx=5mm, dy=5mm, dz=5mm
Reference Value = 20.2 V/m
Peak SAR (extrapolated) = 1.70 W/kg
SAR(1 g) = 0.724 mW/g; SAR(10 g) = 0.307 mW/g
Maximum value of SAR (measured) = 1.000 mW/g

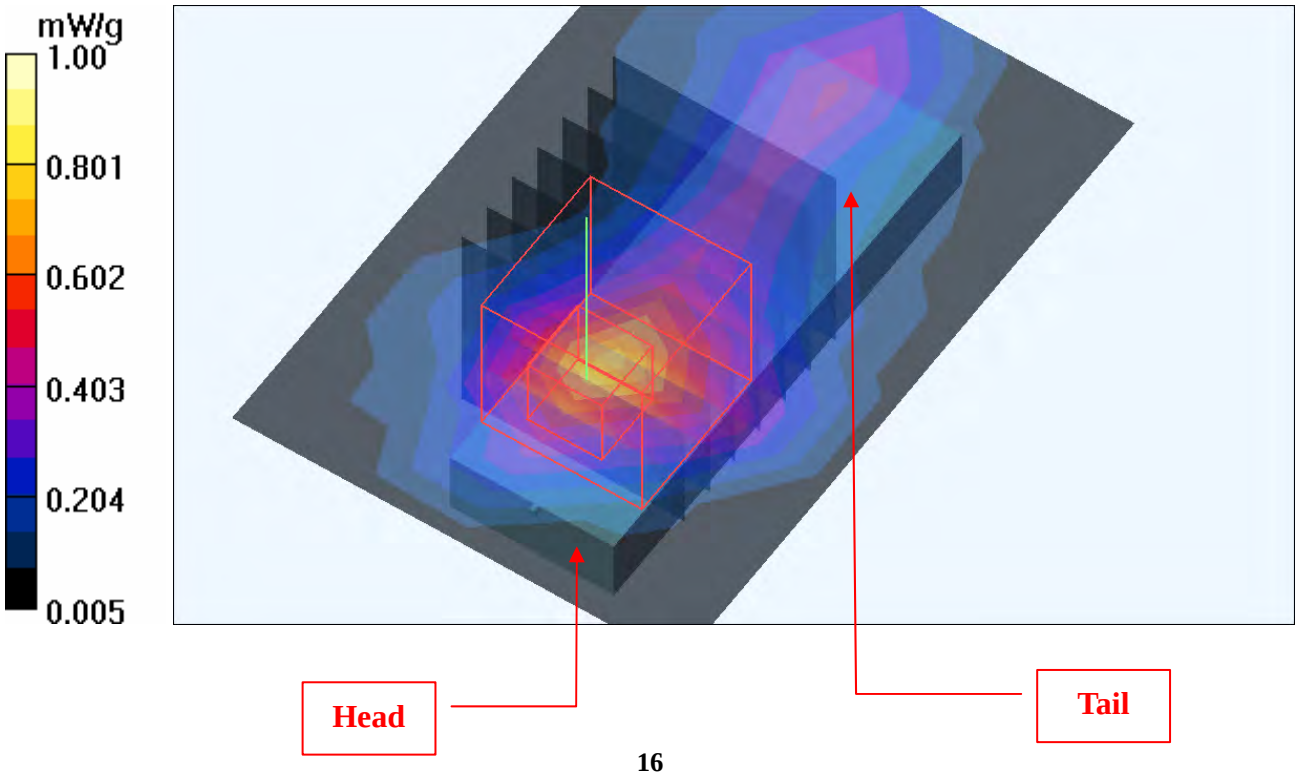

Date/Time: 2009/4/27 19:28:13

Test Laboratory: Bureau Veritas ADT

M09-11b-Ch6

DUT: Wireless-N USB Network Adapter with Dual-Band ; Type: WUSB600N ver.2

Communication System: 802.11b ; Frequency: 2437 MHz ; Duty Cycle: 1:1 ; Modulation type: DBPSK
Medium: MSL2450 Medium parameters used: f = 2437 MHz; σ = 1.99 mho/m; ε_r = 53.9; ρ = 1000 kg/m^3
Phantom section: Flat Section ; Separation distance : 5 mm (The front side of the EUT to the Phantom)

DASY4 Configuration:
- Probe: EX3DV3 - SN3504 ; ConvF(7.53, 7.53, 7.53) ; Calibrated: 2009/1/21
- Sensor-Surface: 3mm (Mechanical Surface Detection)
- Electronics: DAE3 Sn510 ; Calibrated: 2009/1/21
- Phantom: SAM 12 ; Type: SAM V4.0 ; Serial: TP 1202
- Measurement SW: DASY4, V4.7 Build 80 ; Postprocessing SW: SEMCAD, V1.8 Build 186

Mid Channel 6/Area Scan (5x7x1): Measurement grid: dx=15mm, dy=15mm
Maximum value of SAR (measured) = 1.14 mW/g

Mid Channel 6/Zoom Scan (7x7x7) (7x7x7)/Cube 0: Measurement grid: dx=5mm, dy=5mm, dz=5mm
Reference Value = 23.0 V/m
Peak SAR (extrapolated) = 2.04 W/kg
SAR(1 g) = 0.863 mW/g; SAR(10 g) = 0.367 mW/g
Maximum value of SAR (measured) = 1.20 mW/g

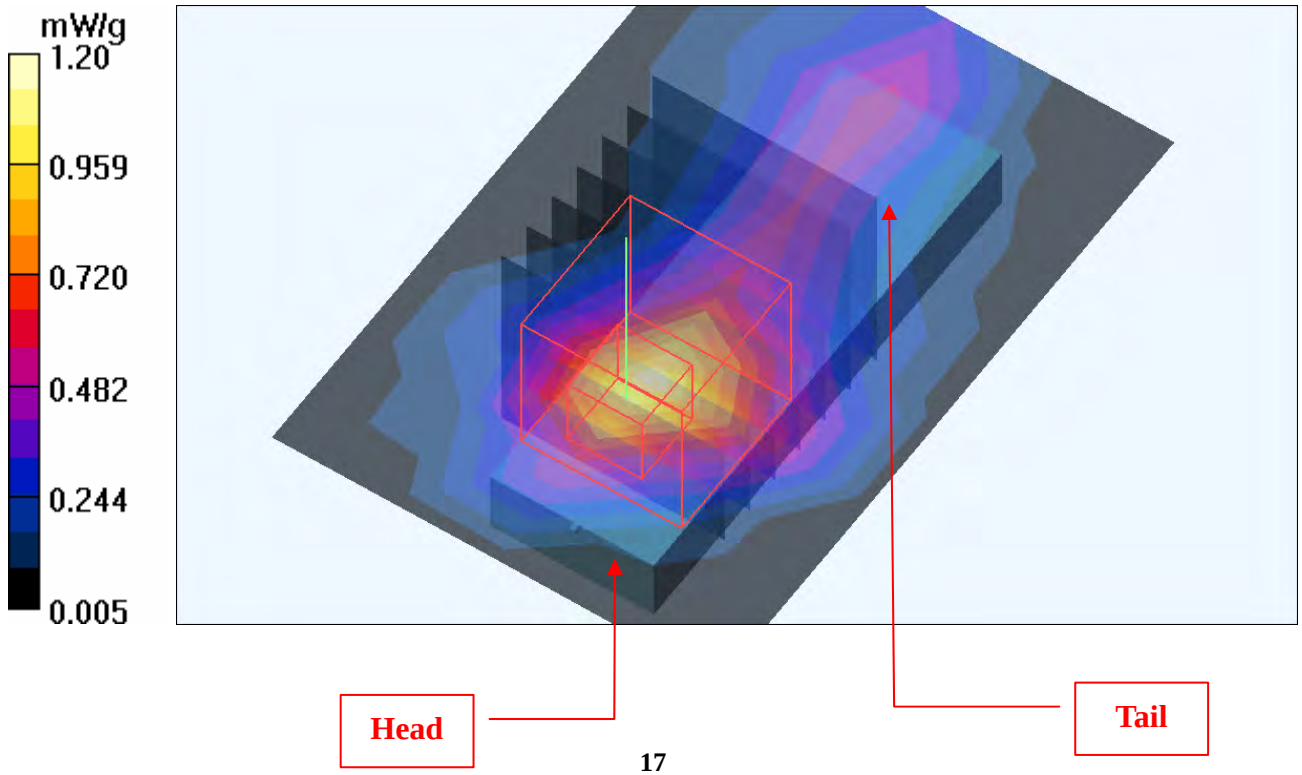

Date/Time: 2009/4/27 20:02:23

Test Laboratory: Bureau Veritas ADT

M09-11b-Ch11

DUT: Wireless-N USB Network Adapter with Dual-Band ; Type: WUSB600N ver.2

Communication System: 802.11b ; Frequency: 2462 MHz ; Duty Cycle: 1:1 ; Modulation type: DBPSK
Medium: MSL2450 Medium parameters used: f = 2462 MHz; σ = 2.02 mho/m; ε_r = 53.7; ρ = 1000 kg/m^3
Phantom section: Flat Section ; Separation distance : 5 mm (The front side of the EUT to the Phantom)

DASY4 Configuration:
- Probe: EX3DV3 - SN3504 ; ConvF(7.53, 7.53, 7.53) ; Calibrated: 2009/1/21
- Sensor-Surface: 3mm (Mechanical Surface Detection)
- Electronics: DAE3 Sn510 ; Calibrated: 2009/1/21
- Phantom: SAM 12 ; Type: SAM V4.0 ; Serial: TP 1202
- Measurement SW: DASY4, V4.7 Build 80 ; Postprocessing SW: SEMCAD, V1.8 Build 186

High Channel 11/Area Scan (5x7x1): Measurement grid: dx=15mm, dy=15mm
Maximum value of SAR (measured) = 0.757 mW/g

High Channel 11/Zoom Scan (7x7x7) (7x7x7)/Cube 0: Measurement grid: dx=5mm, dy=5mm, dz=5mm
Reference Value = 19.5 V/m
Peak SAR (extrapolated) = 1.68 W/kg
SAR(1 g) = 0.704 mW/g; SAR(10 g) = 0.294 mW/g
Maximum value of SAR (measured) = 0.981 mW/g

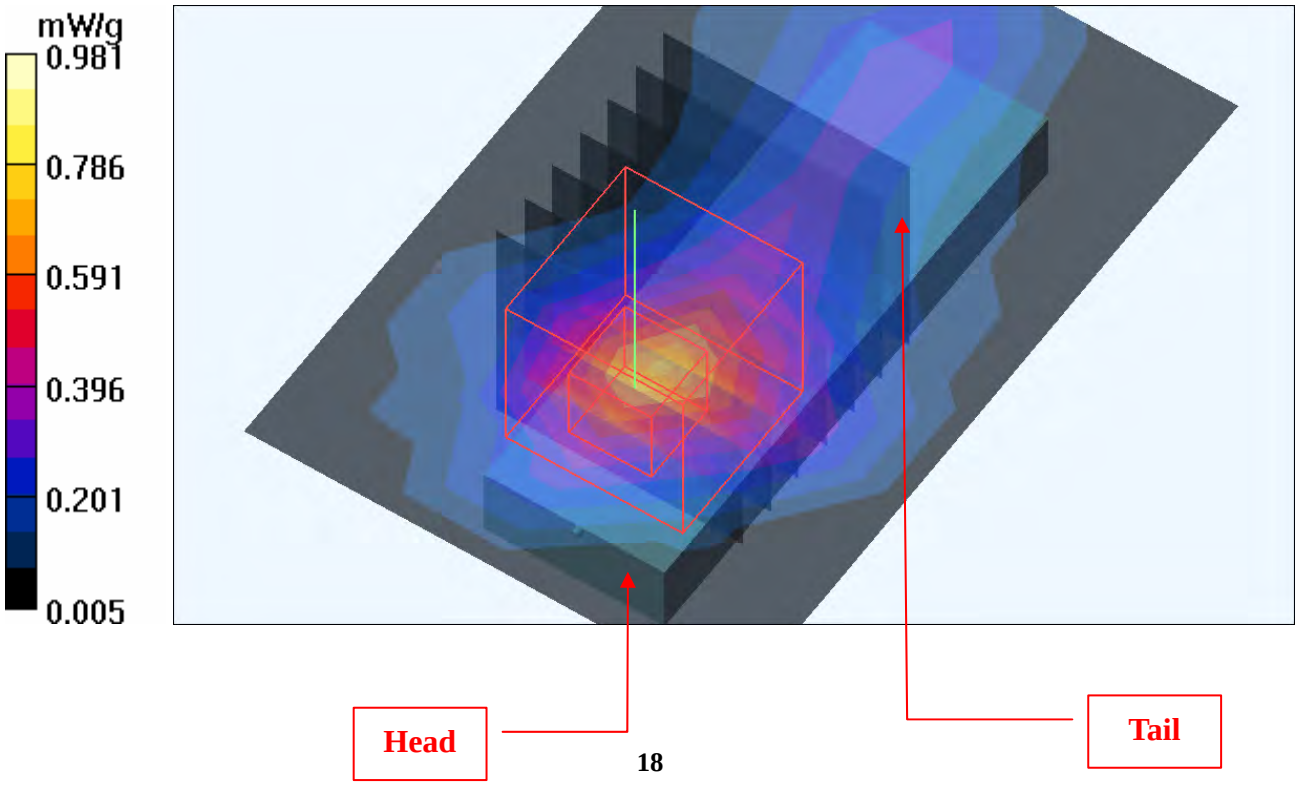

Date/Time: 2009/4/27 20:20:36

Test Laboratory: Bureau Veritas ADT

M10-11g-Ch6

DUT: Wireless-N USB Network Adapter with Dual-Band ; Type: WUSB600N ver.2

Communication System: 802.11g ; Frequency: 2437 MHz ; Duty Cycle: 1:1 ; Modulation type: BPSK
Medium: MSL2450 Medium parameters used: f = 2437 MHz; σ = 1.99 mho/m; ε_r = 53.9; ρ = 1000 kg/m^3
Phantom section: Flat Section ; Separation distance : 5 mm (The front side of the EUT to the Phantom)

DASY4 Configuration:
- Probe: EX3DV3 - SN3504 ; ConvF(7.53, 7.53, 7.53) ; Calibrated: 2009/1/21
- Sensor-Surface: 3mm (Mechanical Surface Detection)
- Electronics: DAE3 Sn510 ; Calibrated: 2009/1/21
- Phantom: SAM 12 ; Type: SAM V4.0 ; Serial: TP 1202
- Measurement SW: DASY4, V4.7 Build 80 ; Postprocessing SW: SEMCAD, V1.8 Build 186

Mid Channel 6/Area Scan (5x7x1): Measurement grid: dx=15mm, dy=15mm
Maximum value of SAR (measured) = 0.771 mW/g

Mid Channel 6/Zoom Scan (7x7x7) (7x7x7)/Cube 0: Measurement grid: dx=5mm, dy=5mm, dz=5mm
Reference Value = 19.6 V/m
Peak SAR (extrapolated) = 1.63 W/kg
SAR(1 g) = 0.692 mW/g; SAR(10 g) = 0.292 mW/g
Maximum value of SAR (measured) = 0.957 mW/g

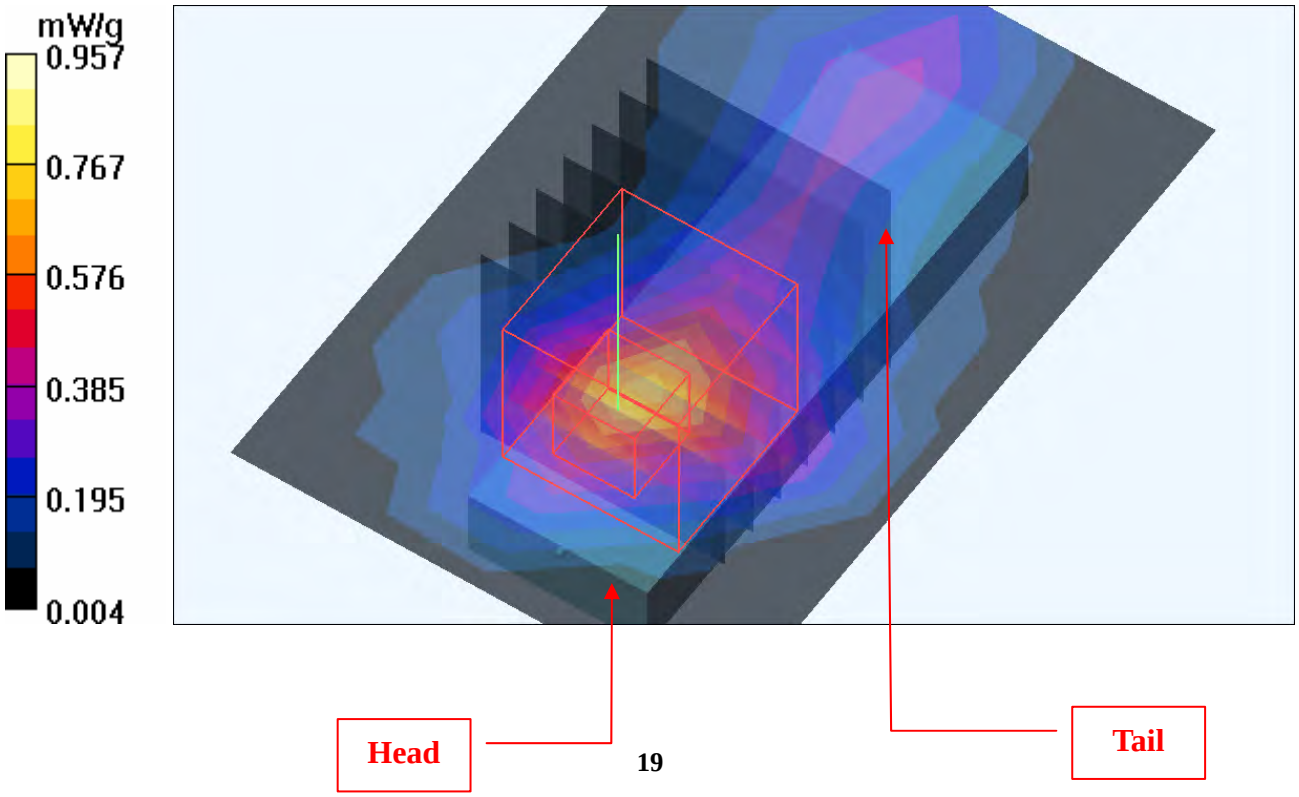

Date/Time: 2009/4/27 20:38:18

Test Laboratory: Bureau Veritas ADT

M11-11N 20M-Ch6

DUT: Wireless-N USB Network Adapter with Dual-Band ; Type: WUSB600N ver.2

Communication System: 2.4G 11n span20 ; Frequency: 2437 MHz ; Duty Cycle: 1:1 ; Modulation type: BPSK

Medium: MSL2450 Medium parameters used: f = 2437 MHz; σ = 1.99 mho/m; ε_r = 53.9; ρ = 1000 kg/m^3

Phantom section: Flat Section ; Separation distance : 5 mm (The front side of the EUT to the Phantom)

DASY4 Configuration:

- Probe: EX3DV3 - SN3504 ; ConvF(7.53, 7.53, 7.53) ; Calibrated: 2009/1/21
- Sensor-Surface: 3mm (Mechanical Surface Detection)
- Electronics: DAE3 Sn510 ; Calibrated: 2009/1/21
- Phantom: SAM 12 ; Type: SAM V4.0 ; Serial: TP 1202
- Measurement SW: DASY4, V4.7 Build 80 ; Postprocessing SW: SEMCAD, V1.8 Build 186

Mid Channel 6/Area Scan (5x7x1): Measurement grid: dx=15mm, dy=15mm

Maximum value of SAR (measured) = 0.495 mW/g

Mid Channel 6/Zoom Scan (7x7x7) (7x7x7)/Cube 0: Measurement grid: dx=5mm, dy=5mm, dz=5mm

Reference Value = 15.7 V/m

Peak SAR (extrapolated) = 1.02 W/kg

SAR(1 g) = 0.435 mW/g; SAR(10 g) = 0.187 mW/g

Maximum value of SAR (measured) = 0.589 mW/g

Mid Channel 6/Zoom Scan (7x7x7) (7x7x7)/Cube 1: Measurement grid: dx=5mm, dy=5mm, dz=5mm

Reference Value = 15.7 V/m

Peak SAR (extrapolated) = 0.519 W/kg

SAR(1 g) = 0.278 mW/g; SAR(10 g) = 0.140 mW/g

Maximum value of SAR (measured) = 0.355 mW/g

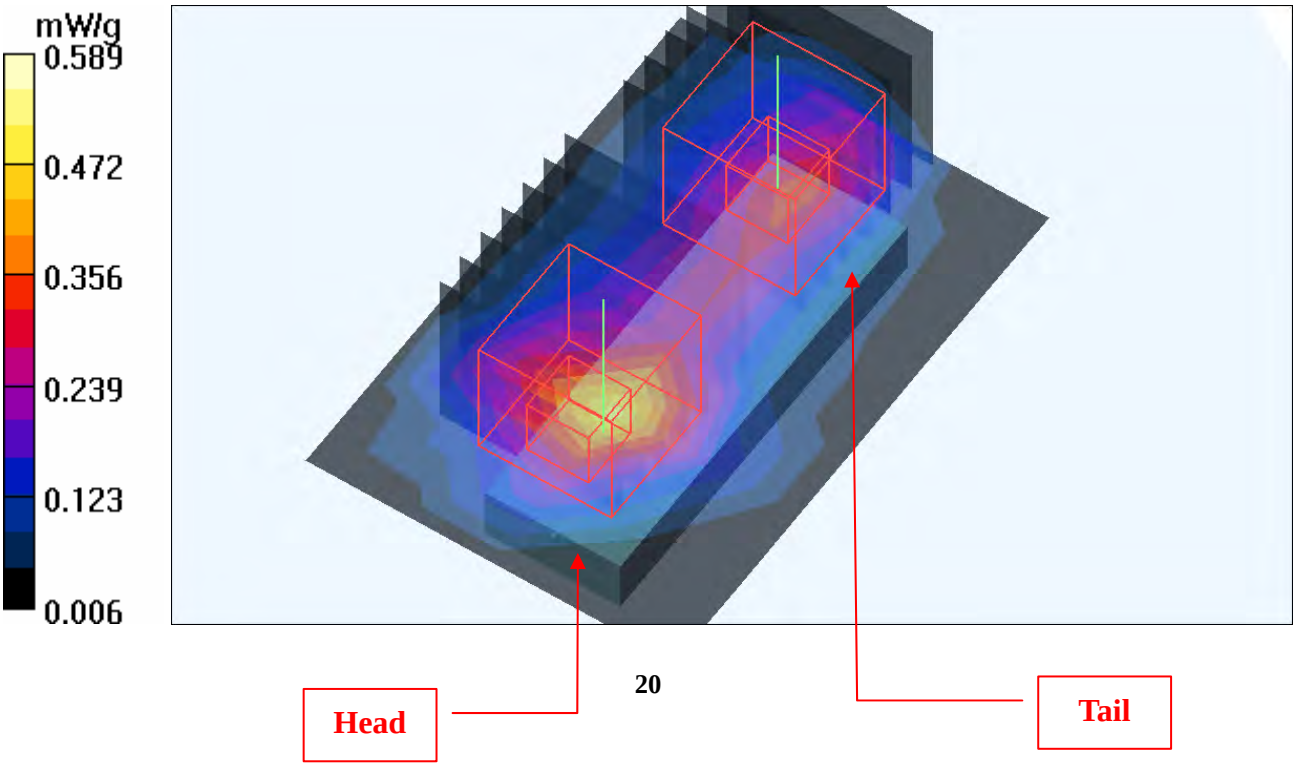

Date/Time: 2009/4/27 21:08:31

Test Laboratory: Bureau Veritas ADT

M12-11N 40M-Ch4

DUT: Wireless-N USB Network Adapter with Dual-Band ; Type: WUSB600N ver.2

Communication System: 802.11n 40MHz ; Frequency: 2437 MHz ; Duty Cycle: 1:1 ; Modulation type: BPSK
Medium: MSL2450 Medium parameters used: f = 2437 MHz; σ = 1.99 mho/m; ε_r = 53.9; ρ = 1000 kg/m^3
Phantom section: Flat Section ; Separation distance : 5 mm (The front side of the EUT to the Phantom)

DASY4 Configuration:
- Probe: EX3DV3 - SN3504 ; ConvF(7.53, 7.53, 7.53) ; Calibrated: 2009/1/21
- Sensor-Surface: 3mm (Mechanical Surface Detection)
- Electronics: DAE3 Sn510 ; Calibrated: 2009/1/21
- Phantom: SAM 12 ; Type: SAM V4.0 ; Serial: TP 1202
- Measurement SW: DASY4, V4.7 Build 80 ; Postprocessing SW: SEMCAD, V1.8 Build 186

Mid Channel 4/Area Scan (5x7x1): Measurement grid: dx=15mm, dy=15mm
Maximum value of SAR (measured) = 0.558 mW/g

Mid Channel 4/Zoom Scan (7x7x7) (7x7x7)/Cube 0: Measurement grid: dx=5mm, dy=5mm, dz=5mm
Reference Value = 16.7 V/m
Peak SAR (extrapolated) = 1.22 W/kg
SAR(1 g) = 0.518 mW/g; SAR(10 g) = 0.218 mW/g
Maximum value of SAR (measured) = 0.711 mW/g

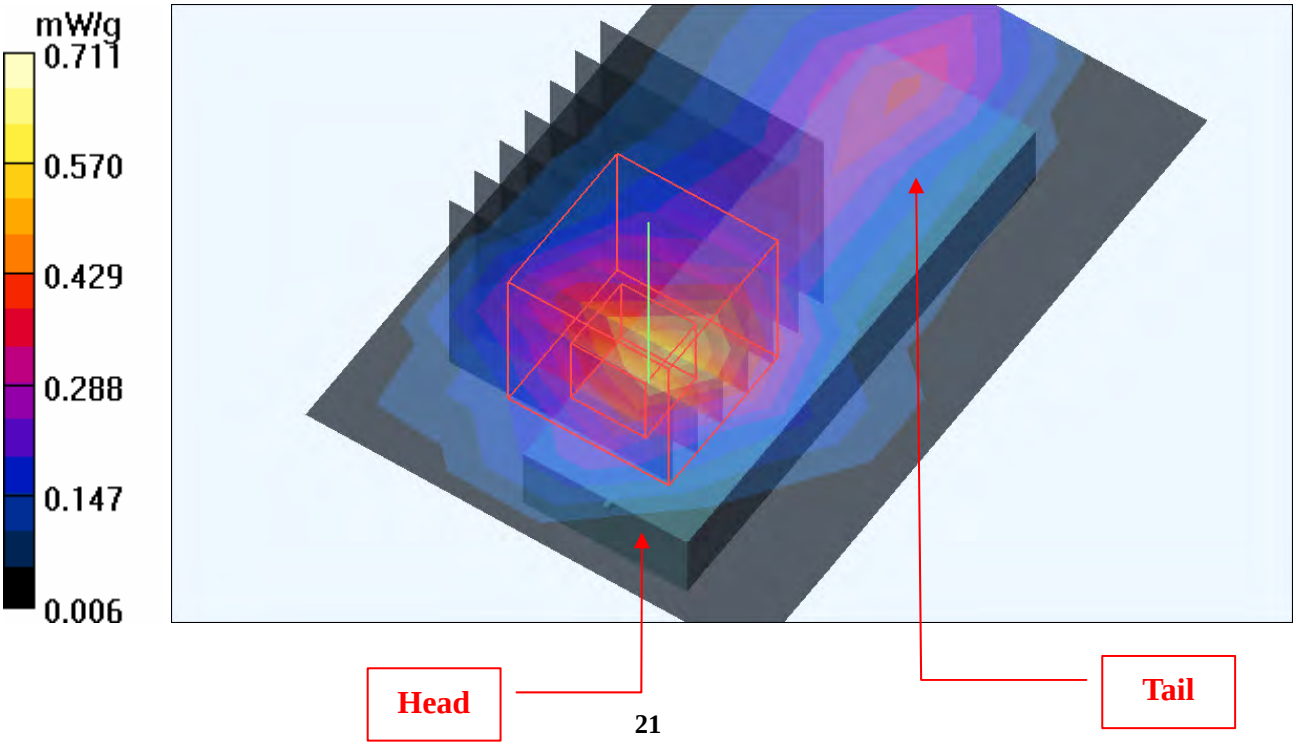

Date/Time: 2009/4/27 21:45:43

Test Laboratory: Bureau Veritas ADT

M13-11b-Ch6

DUT: Wireless-N USB Network Adapter with Dual-Band ; Type: WUSB600N ver.2

Communication System: 802.11b ; Frequency: 2437 MHz ; Duty Cycle: 1:1 ; Modulation type: DBPSK
Medium: MSL2450 Medium parameters used: f = 2437 MHz; σ = 1.99 mho/m; ε_r = 53.9; ρ = 1000 kg/m^3
Phantom section: Flat Section ; Separation distance : 5 mm (The edge side of the EUT to the Phantom)

DASY4 Configuration:
- Probe: EX3DV3 - SN3504 ; ConvF(7.53, 7.53, 7.53) ; Calibrated: 2009/1/21
- Sensor-Surface: 3mm (Mechanical Surface Detection)
- Electronics: DAE3 Sn510 ; Calibrated: 2009/1/21
- Phantom: SAM 12 ; Type: SAM V4.0 ; Serial: TP 1202
- Measurement SW: DASY4, V4.7 Build 80 ; Postprocessing SW: SEMCAD, V1.8 Build 186

Mid Channel 6/Area Scan (5x7x1): Measurement grid: dx=15mm, dy=15mm
Maximum value of SAR (measured) = 0.717 mW/g

Mid Channel 6/Zoom Scan (7x7x7) (7x7x7)/Cube 0: Measurement grid: dx=5mm, dy=5mm, dz=5mm
Reference Value = 18.7 V/m
Peak SAR (extrapolated) = 1.03 W/kg
SAR(1 g) = 0.535 mW/g; SAR(10 g) = 0.270 mW/g
Maximum value of SAR (measured) = 0.682 mW/g

Mid Channel 6/Zoom Scan (7x7x7) (7x7x7)/Cube 1: Measurement grid: dx=5mm, dy=5mm, dz=5mm
Reference Value = 18.7 V/m
Peak SAR (extrapolated) = 1.00 W/kg
SAR(1 g) = 0.460 mW/g; SAR(10 g) = 0.200 mW/g
Maximum value of SAR (measured) = 0.622 mW/g

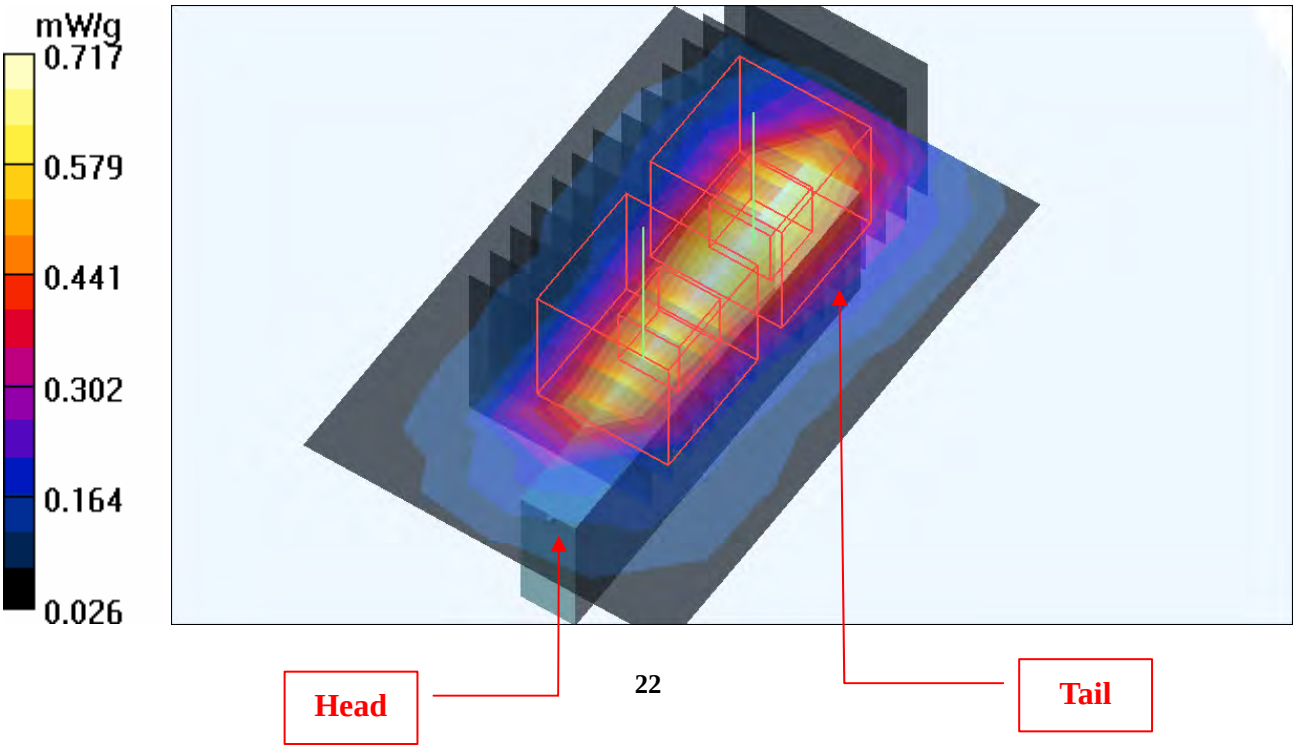

Date/Time: 2009/4/27 22:18:16

Test Laboratory: Bureau Veritas ADT

M14-11g-Ch6

DUT: Wireless-N USB Network Adapter with Dual-Band ; Type: WUSB600N ver.2

Communication System: 802.11g ; Frequency: 2437 MHz ; Duty Cycle: 1:1 ; Modulation type: BPSK
Medium: MSL2450 Medium parameters used: f = 2437 MHz; σ = 1.99 mho/m; ε_r = 53.9; ρ = 1000 kg/m^3
Phantom section: Flat Section ; Separation distance : 5 mm (The edge side of the EUT to the Phantom)

DASY4 Configuration:
- Probe: EX3DV3 - SN3504 ; ConvF(7.53, 7.53, 7.53) ; Calibrated: 2009/1/21
- Sensor-Surface: 3mm (Mechanical Surface Detection)
- Electronics: DAE3 Sn510 ; Calibrated: 2009/1/21
- Phantom: SAM 12 ; Type: SAM V4.0 ; Serial: TP 1202
- Measurement SW: DASY4, V4.7 Build 80 ; Postprocessing SW: SEMCAD, V1.8 Build 186

Mid Channel 6/Area Scan (5x7x1): Measurement grid: dx=15mm, dy=15mm
Maximum value of SAR (measured) = 0.551 mW/g
Mid Channel 6/Zoom Scan (7x7x7) (7x7x7)/Cube 0: Measurement grid: dx=5mm, dy=5mm, dz=5mm
Reference Value = 16.7 V/m
Peak SAR (extrapolated) = 0.846 W/kg
SAR(1 g) = 0.439 mW/g; SAR(10 g) = 0.221 mW/g
Maximum value of SAR (measured) = 0.563 mW/g
Mid Channel 6/Zoom Scan (7x7x7) (7x7x7)/Cube 1: Measurement grid: dx=5mm, dy=5mm, dz=5mm
Reference Value = 16.7 V/m
Peak SAR (extrapolated) = 0.818 W/kg
SAR(1 g) = 0.377 mW/g; SAR(10 g) = 0.166 mW/g
Maximum value of SAR (measured) = 0.507 mW/g

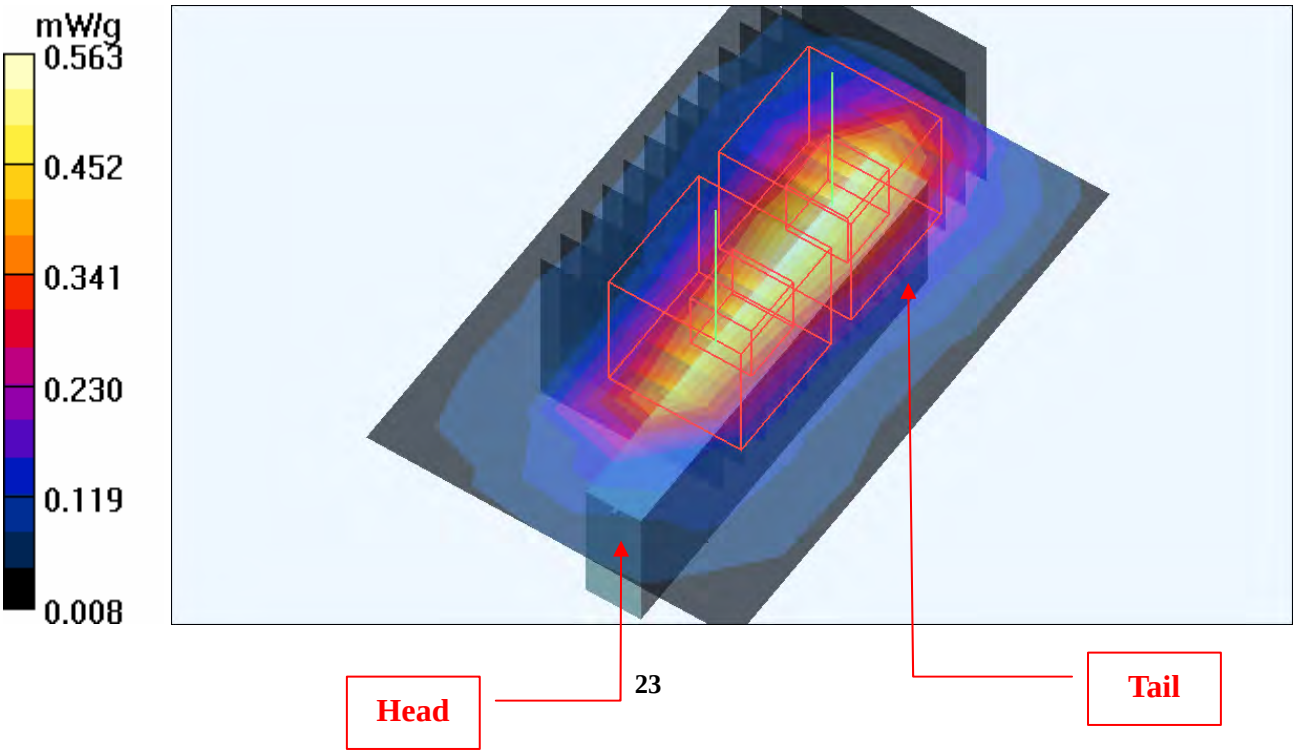

Date/Time: 2009/4/27 22:49:02

Test Laboratory: Bureau Veritas ADT

M15-11N 20M-Ch6

DUT: Wireless-N USB Network Adapter with Dual-Band ; Type: WUSB600N ver.2

Communication System: 2.4G 11n span20 ; Frequency: 2437 MHz ; Duty Cycle: 1:1 ; Modulation type: BPSK

Medium: MSL2450 Medium parameters used: f = 2437 MHz; σ = 1.99 mho/m; ε_r = 53.9; ρ = 1000 kg/m^3

Phantom section: Flat Section ; Separation distance : 5 mm (The edge side of the EUT to the Phantom)

DASY4 Configuration:

- Probe: EX3DV3 - SN3504 ; ConvF(7.53, 7.53, 7.53) ; Calibrated: 2009/1/21
- Sensor-Surface: 3mm (Mechanical Surface Detection)
- Electronics: DAE3 Sn510 ; Calibrated: 2009/1/21
- Phantom: SAM 12 ; Type: SAM V4.0 ; Serial: TP 1202
- Measurement SW: DASY4, V4.7 Build 80 ; Postprocessing SW: SEMCAD, V1.8 Build 186

Mid Channel 6/Area Scan (5x7x1): Measurement grid: dx=15mm, dy=15mm

Maximum value of SAR (measured) = 0.298 mW/g

Mid Channel 6/Zoom Scan (7x7x7) (7x7x7)/Cube 0: Measurement grid: dx=5mm, dy=5mm, dz=5mm

Reference Value = 12.3 V/m

Peak SAR (extrapolated) = 0.470 W/kg

SAR(1 g) = 0.244 mW/g; SAR(10 g) = 0.123 mW/g

Maximum value of SAR (measured) = 0.312 mW/g

Mid Channel 6/Zoom Scan (7x7x7) (7x7x7)/Cube 1: Measurement grid: dx=5mm, dy=5mm, dz=5mm

Reference Value = 12.3 V/m

Peak SAR (extrapolated) = 0.342 W/kg

SAR(1 g) = 0.165 mW/g; SAR(10 g) = 0.075 mW/g

Maximum value of SAR (measured) = 0.227 mW/g

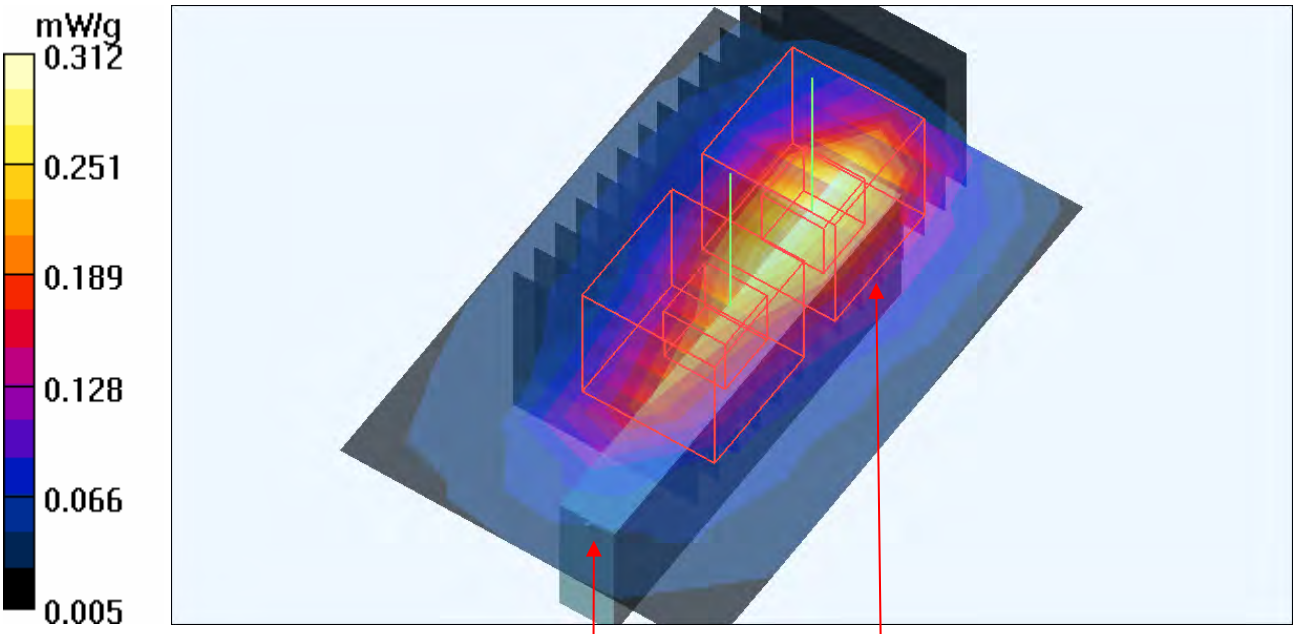

Head

Tail

Date/Time: 2009/4/27 23:21:15

Test Laboratory: Bureau Veritas ADT

M16-11N 40M-Ch4

DUT: Wireless-N USB Network Adapter with Dual-Band ; Type: WUSB600N ver.2

Communication System: 802.11n 40MHz ; Frequency: 2437 MHz ; Duty Cycle: 1:1 ; Modulation type: BPSK
Medium: MSL2450 Medium parameters used: f = 2437 MHz; σ = 1.99 mho/m; ε_r = 53.9; ρ = 1000 kg/m^3
Phantom section: Flat Section ; Separation distance : 5 mm (The edge side of the EUT to the Phantom)

DASY4 Configuration:
- Probe: EX3DV3 - SN3504 ; ConvF(7.53, 7.53, 7.53) ; Calibrated: 2009/1/21
- Sensor-Surface: 3mm (Mechanical Surface Detection)
- Electronics: DAE3 Sn510 ; Calibrated: 2009/1/21
- Phantom: SAM 12 ; Type: SAM V4.0 ; Serial: TP 1202
- Measurement SW: DASY4, V4.7 Build 80 ; Postprocessing SW: SEMCAD, V1.8 Build 186

Mid Channel 4/Area Scan (5x7x1): Measurement grid: dx=15mm, dy=15mm
Maximum value of SAR (measured) = 0.328 mW/g

Mid Channel 4/Zoom Scan (7x7x7) (7x7x7)/Cube 0: Measurement grid: dx=5mm, dy=5mm, dz=5mm
Reference Value = 12.9 V/m
Peak SAR (extrapolated) = 0.522 W/kg
SAR(1 g) = 0.274 mW/g; SAR(10 g) = 0.140 mW/g
Maximum value of SAR (measured) = 0.349 mW/g

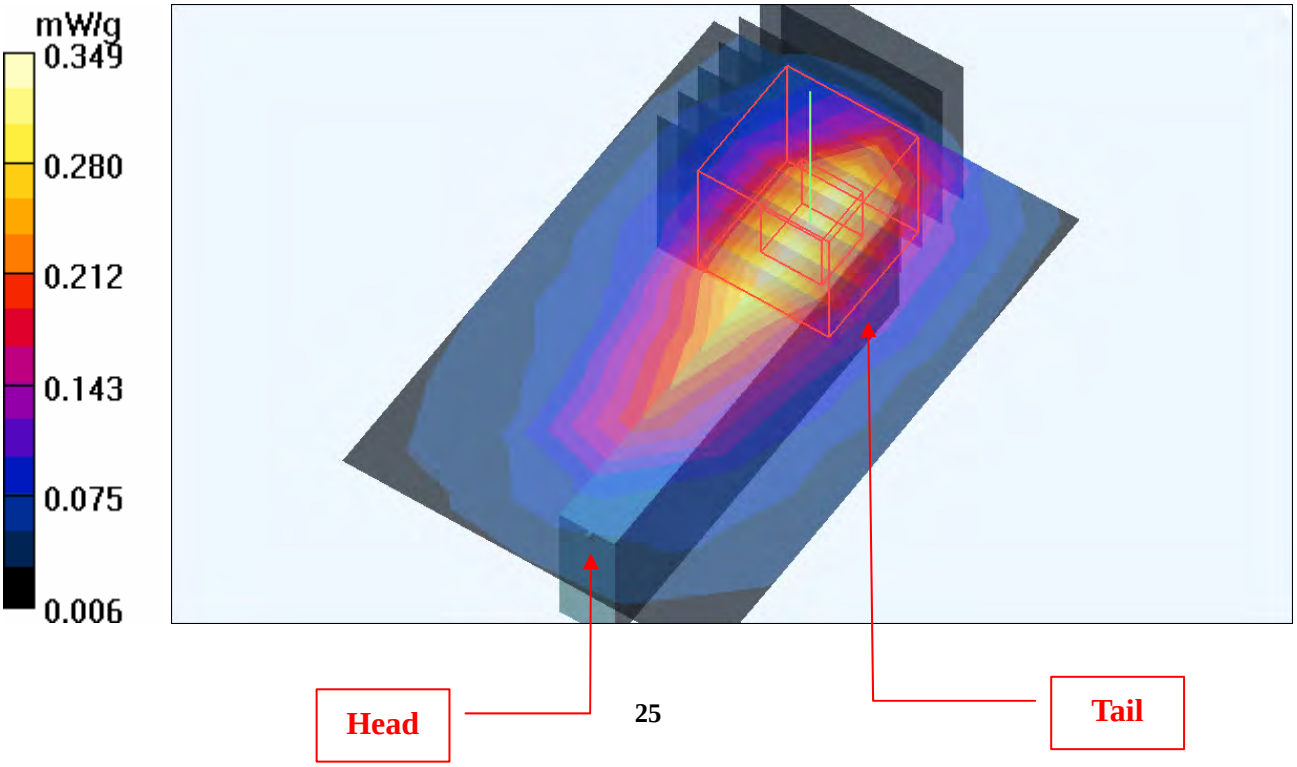

Date/Time: 2009/4/23 06:39:13

Test Laboratory: Bureau Veritas ADT

M17-11a-Ch149

DUT: Wireless-N USB Network Adapter with Dual-Band ; Type: WUSB600N ver.2

Communication System: 802.11a ; Frequency: 5745 MHz ; Duty Cycle: 1:1 ; Modulation type: BPSK
Medium: MSL5800 Medium parameters used: f = 5745 MHz; σ = 5.96 mho/m; εr = 49.8; ρ = 1000 kg/m^3
Phantom section: Flat Section ; Separation distance : 5 mm (The bottom side of the EUT to the Phantom)

DASY4 Configuration:
- Probe: EX3DV3 - SN3504 ; ConvF(3.98, 3.98, 3.98) ; Calibrated: 2009/1/21
- Sensor-Surface: 3mm (Mechanical Surface Detection)
- Electronics: DAE3 Sn510 ; Calibrated: 2009/1/21
- Phantom: SAM 12 ; Type: SAM V4.0 ; Serial: TP 1202
- Measurement SW: DASY4, V4.7 Build 80 ; Postprocessing SW: SEMCAD, V1.8 Build 186

Low Channel 149/Area Scan (6x10x1): Measurement grid: dx=10mm, dy=10mm
Maximum value of SAR (measured) = 0.410 mW/g

Low Channel 149/Zoom Scan (8x8x8)/Cube 0: Measurement grid: dx=4.3mm, dy=4.3mm, dz=3mm
Reference Value = 6.44 V/m
Peak SAR (extrapolated) = 1.69 W/kg
SAR(1 g) = 0.306 mW/g; SAR(10 g) = 0.144 mW/g
Maximum value of SAR (measured) = 0.381 mW/g

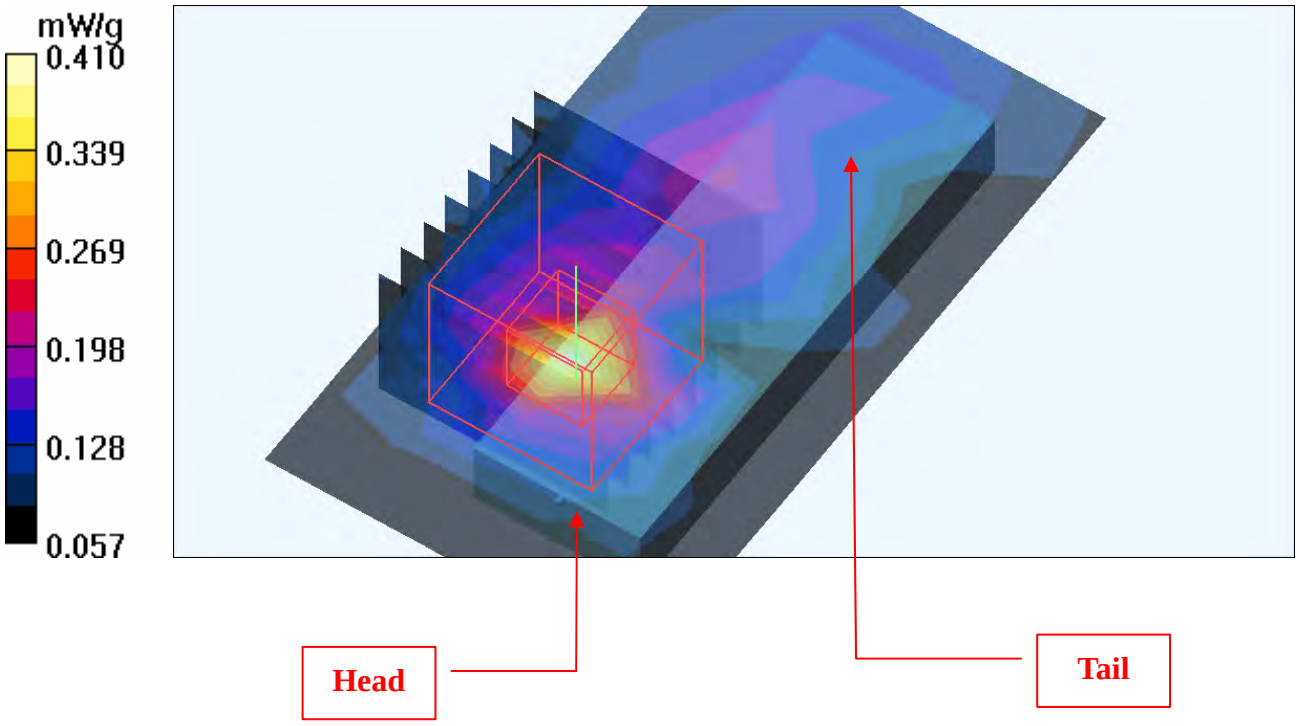

Date/Time: 2009/4/23 13:32:08

Test Laboratory: Bureau Veritas ADT

M18-11aN 20M-Ch149

DUT: Wireless-N USB Network Adapter with Dual-Band ; Type: WUSB600N ver.2

Communication System: 11n 5G span20 ; Frequency: 5745 MHz ; Duty Cycle: 1:1 ; Modulation type: BPSK
Medium: MSL5800 Medium parameters used: f = 5745 MHz; σ = 5.96 mho/m; ε_r = 49.8; ρ = 1000 kg/m^3
Phantom section: Flat Section ; Separation distance : 5 mm (The bottom side of the EUT to the Phantom)
DASY4 Configuration:
- Probe: EX3DV3 - SN3504 ; ConvF(3.98, 3.98, 3.98) ; Calibrated: 2009/1/21
- Sensor-Surface: 3mm (Mechanical Surface Detection)
- Electronics: DAE3 Sn510 ; Calibrated: 2009/1/21
- Phantom: SAM 12 ; Type: SAM V4.0 ; Serial: TP 1202
- Measurement SW: DASY4, V4.7 Build 80 ; Postprocessing SW: SEMCAD, V1.8 Build 186

Low Channel 149/Area Scan (6x10x1): Measurement grid: dx=10mm, dy=10mm
Maximum value of SAR (measured) = 0.615 mW/g
Low Channel 149/Zoom Scan (8x8x8)/Cube 0: Measurement grid: dx=4.3mm, dy=4.3mm, dz=3mm
Reference Value = 4.41 V/m
Peak SAR (extrapolated) = 2.03 W/kg
SAR(1 g) = 0.512 mW/g; SAR(10 g) = 0.234 mW/g
Maximum value of SAR (measured) = 0.679 mW/g
Low Channel 149/Zoom Scan (8x8x8)/Cube 1: Measurement grid: dx=4.3mm, dy=4.3mm, dz=3mm
Reference Value = 4.41 V/m
Peak SAR (extrapolated) = 1.66 W/kg
SAR(1 g) = 0.405 mW/g; SAR(10 g) = 0.201 mW/g
Maximum value of SAR (measured) = 0.510 mW/g

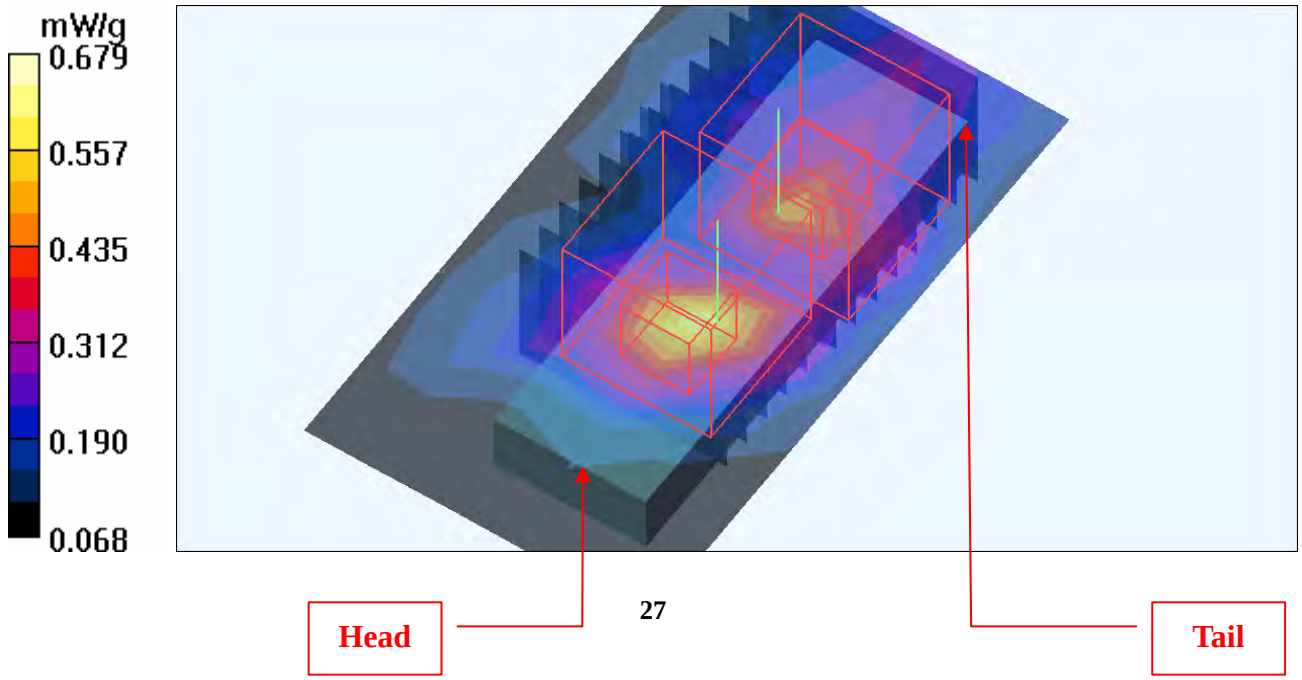

Date/Time: 2009/4/23 16:21:27

Test Laboratory: Bureau Veritas ADT

M19-11aN 40M-Ch151

DUT: Wireless-N USB Network Adapter with Dual-Band ; Type: WUSB600N ver.2

Communication System: 11n 5G span40 ; Frequency: 5755 MHz ; Duty Cycle: 1:1 ; Modulation type: BPSK
Medium: MSL5800 Medium parameters used: f = 5755 MHz; σ = 5.98 mho/m; ε_r = 49.8; ρ = 1000 kg/m^3
Phantom section: Flat Section ; Separation distance : 5 mm (The bottom side of the EUT to the Phantom)

DASY4 Configuration:
- Probe: EX3DV3 - SN3504 ; ConvF(3.98, 3.98, 3.98) ; Calibrated: 2009/1/21
- Sensor-Surface: 3mm (Mechanical Surface Detection)
- Electronics: DAE3 Sn510 ; Calibrated: 2009/1/21
- Phantom: SAM 12 ; Type: SAM V4.0 ; Serial: TP 1202
- Measurement SW: DASY4, V4.7 Build 80 ; Postprocessing SW: SEMCAD, V1.8 Build 186

Low Channel 151/Area Scan (6x10x1): Measurement grid: dx=10mm, dy=10mm
Maximum value of SAR (measured) = 0.587 mW/g

Low Channel 151/Zoom Scan (8x8x8)/Cube 0: Measurement grid: dx=4.3mm, dy=4.3mm, dz=3mm
Reference Value = 7.73 V/m
Peak SAR (extrapolated) = 1.93 W/kg
SAR(1 g) = 0.468 mW/g; SAR(10 g) = 0.208 mW/g
Maximum value of SAR (measured) = 0.613 mW/g

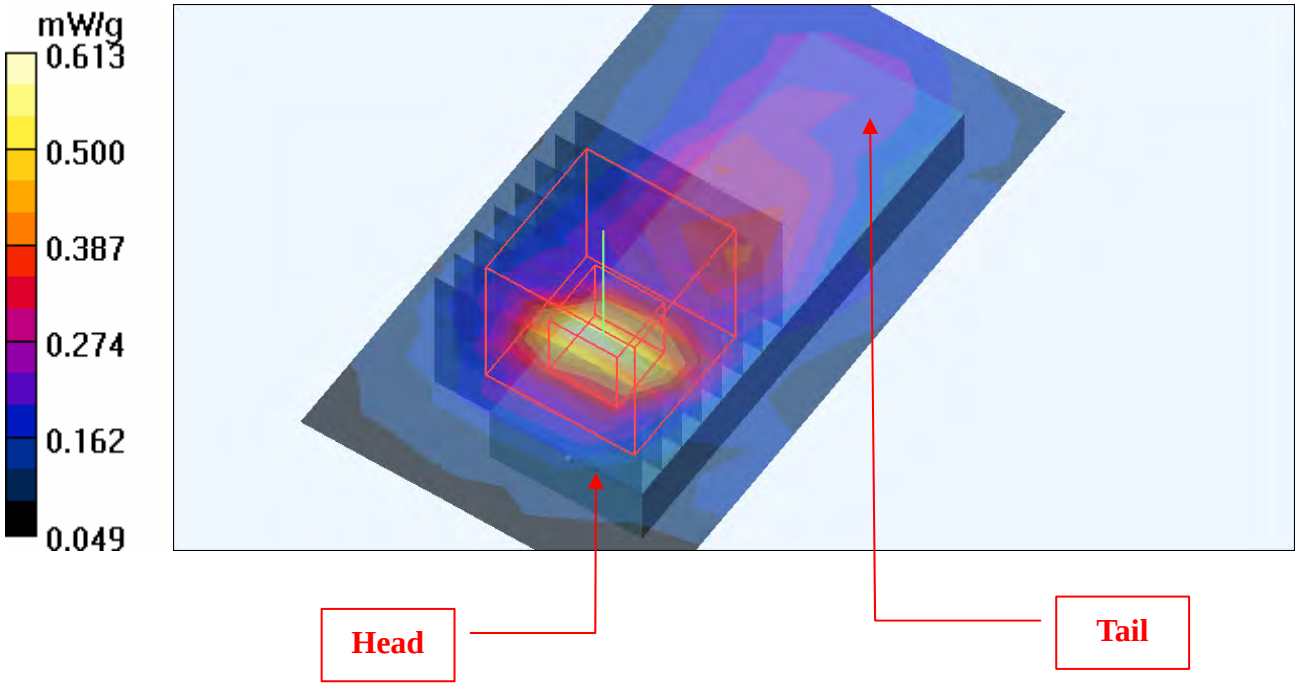

Date/Time: 2009/4/23 18:36:19

Test Laboratory: Bureau Veritas ADT

M20-11a-Ch149

DUT: Wireless-N USB Network Adapter with Dual-Band ; Type: WUSB600N ver.2

Communication System: 802.11a ; Frequency: 5745 MHz ; Duty Cycle: 1:1 ; Modulation type: BPSK
Medium: MSL5800 Medium parameters used: f = 5745 MHz; σ = 5.96 mho/m; ε_r = 49.8; ρ = 1000 kg/m^3
Phantom section: Flat Section ; Separation distance : 5 mm (The edge side of the EUT to the Phantom)

DASY4 Configuration:
- Probe: EX3DV3 - SN3504 ; ConvF(3.98, 3.98, 3.98) ; Calibrated: 2009/1/21
- Sensor-Surface: 3mm (Mechanical Surface Detection)
- Electronics: DAE3 Sn510 ; Calibrated: 2009/1/21
- Phantom: SAM 12 ; Type: SAM V4.0 ; Serial: TP 1202
- Measurement SW: DASY4, V4.7 Build 80 ; Postprocessing SW: SEMCAD, V1.8 Build 186

Low Channel 149/Area Scan (6x10x1): Measurement grid: dx=10mm, dy=10mm
Maximum value of SAR (measured) = 0.160 mW/g

Low Channel 149/Zoom Scan (8x8x8)/Cube 0: Measurement grid: dx=4.3mm, dy=4.3mm, dz=3mm
Reference Value = 4.82 V/m
Peak SAR (extrapolated) = 0.497 W/kg
SAR(1 g) = 0.140 mW/g; SAR(10 g) = 0.101 mW/g
Maximum value of SAR (measured) = 0.165 mW/g

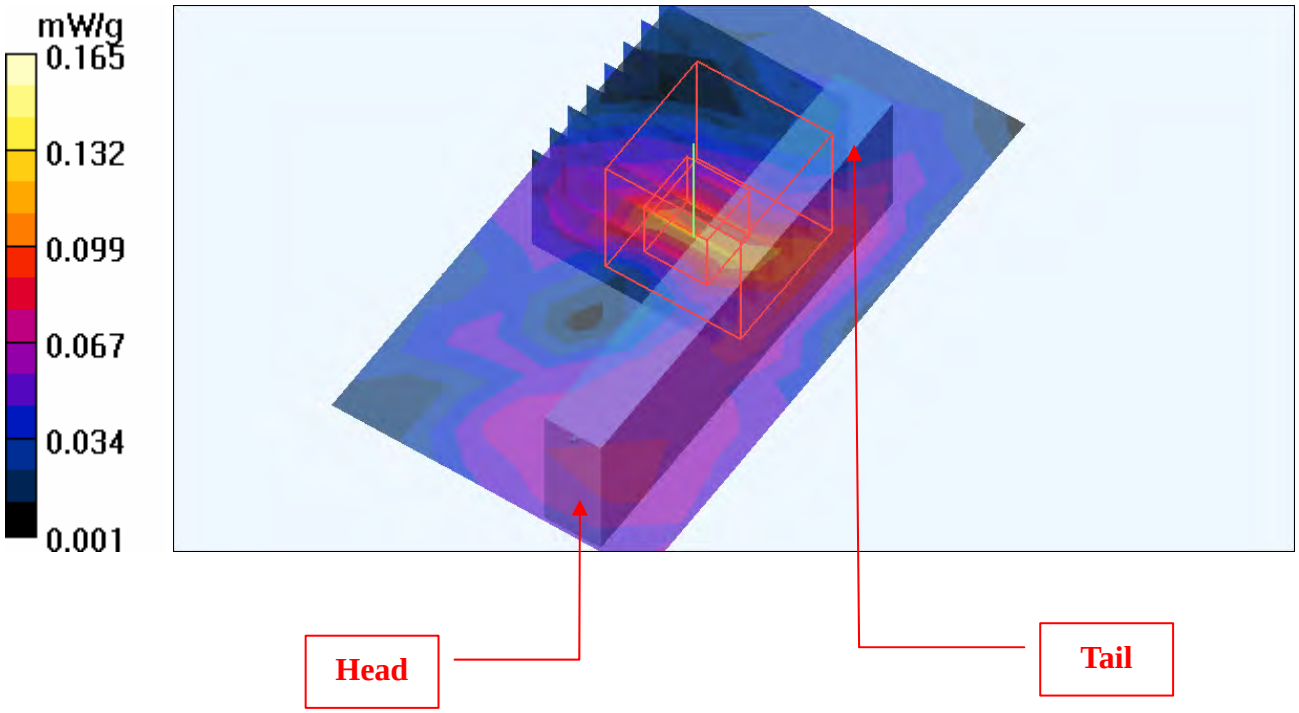

Date/Time: 2009/4/23 20:48:24

Test Laboratory: Bureau Veritas ADT

M21-11aN 20M-Ch149

DUT: Wireless-N USB Network Adapter with Dual-Band ; Type: WUSB600N ver.2

Communication System: 11n 5G span20 ; Frequency: 5745 MHz ; Duty Cycle: 1:1 ; Modulation type: BPSK

Medium: MSL5800 Medium parameters used: f = 5745 MHz; σ = 5.96 mho/m; ε_r = 49.8; ρ = 1000 kg/m^3

Phantom section: Flat Section ; Separation distance : 5 mm (The edge side of the EUT to the Phantom)

DASY4 Configuration:

- Probe: EX3DV3 - SN3504 ; ConvF(3.98, 3.98, 3.98) ; Calibrated: 2009/1/21
- Sensor-Surface: 3mm (Mechanical Surface Detection)
- Electronics: DAE3 Sn510 ; Calibrated: 2009/1/21
- Phantom: SAM 12 ; Type: SAM V4.0 ; Serial: TP 1202
- Measurement SW: DASY4, V4.7 Build 80 ; Postprocessing SW: SEMCAD, V1.8 Build 186

Low Channel 149/Area Scan (6x10x1): Measurement grid: dx=10mm, dy=10mm

Maximum value of SAR (measured) = 0.375 mW/g

Low Channel 149/Zoom Scan (8x8x8)/Cube 0: Measurement grid: dx=4.3mm, dy=4.3mm, dz=3mm

Reference Value = 5.99 V/m

Peak SAR (extrapolated) = 1.06 W/kg

SAR(1 g) = 0.329 mW/g; SAR(10 g) = 0.170 mW/g

Maximum value of SAR (measured) = 0.426 mW/g

Low Channel 149/Zoom Scan (8x8x8)/Cube 1: Measurement grid: dx=4.3mm, dy=4.3mm, dz=3mm

Reference Value = 5.99 V/m

Peak SAR (extrapolated) = 0.871 W/kg

SAR(1 g) = 0.273 mW/g; SAR(10 g) = 0.157 mW/g

Maximum value of SAR (measured) = 0.344 mW/g

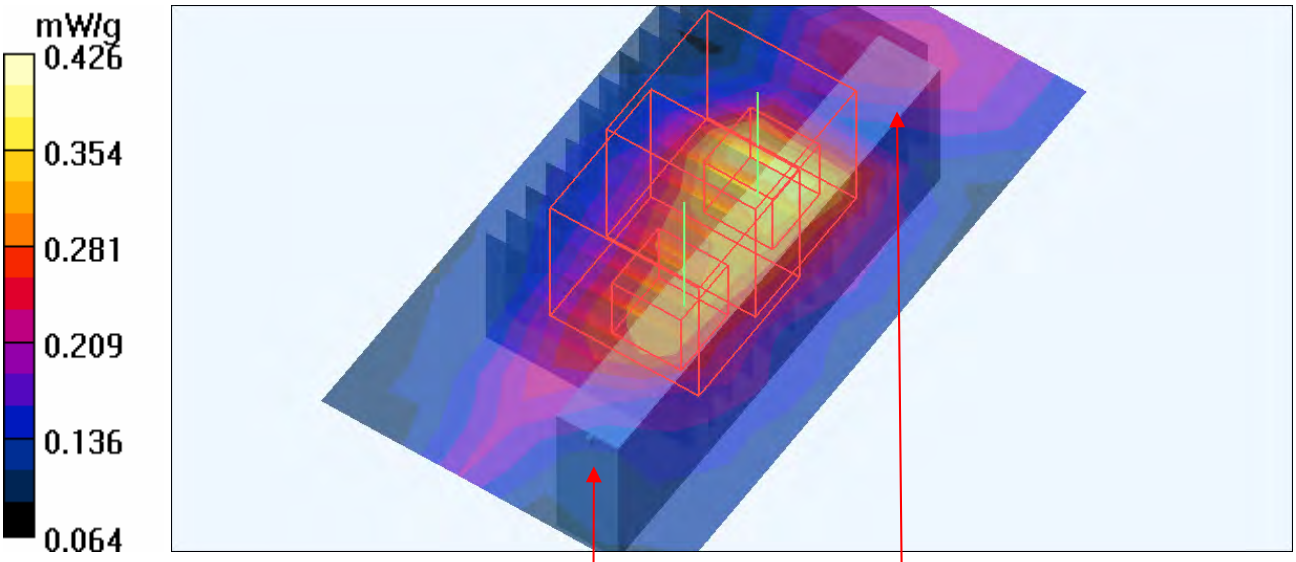

Head

Tail

Date/Time: 2009/4/23 23:03:34

Test Laboratory: Bureau Veritas ADT

M22-11aN 40M-Ch151

DUT: Wireless-N USB Network Adapter with Dual-Band ; Type: WUSB600N ver.2

Communication System: 11n 5G span40 ; Frequency: 5755 MHz ; Duty Cycle: 1:1 ; Modulation type: BPSK

Medium: MSL5800 Medium parameters used: f = 5755 MHz; σ = 5.98 mho/m; ε_r = 49.8; ρ = 1000 kg/m^3

Phantom section: Flat Section ; Separation distance : 5 mm (The edge side of the EUT to the Phantom)

DASY4 Configuration:

- Probe: EX3DV3 - SN3504 ; ConvF(3.98, 3.98, 3.98) ; Calibrated: 2009/1/21
- Sensor-Surface: 3mm (Mechanical Surface Detection)
- Electronics: DAE3 Sn510 ; Calibrated: 2009/1/21
- Phantom: SAM 12 ; Type: SAM V4.0 ; Serial: TP 1202
- Measurement SW: DASY4, V4.7 Build 80 ; Postprocessing SW: SEMCAD, V1.8 Build 186

Low Channel 151/Area Scan (6x10x1): Measurement grid: dx=10mm, dy=10mm

Maximum value of SAR (measured) = 0.277 mW/g

Low Channel 151/Zoom Scan (8x8x8)/Cube 0: Measurement grid: dx=4.3mm, dy=4.3mm, dz=3mm

Reference Value = 5.73 V/m

Peak SAR (extrapolated) = 1.24 W/kg

SAR(1 g) = 0.263 mW/g; SAR(10 g) = 0.136 mW/g

Maximum value of SAR (measured) = 0.314 mW/g

Low Channel 151/Zoom Scan (8x8x8)/Cube 1: Measurement grid: dx=4.3mm, dy=4.3mm, dz=3mm

Reference Value = 5.73 V/m

Peak SAR (extrapolated) = 0.768 W/kg

SAR(1 g) = 0.219 mW/g; SAR(10 g) = 0.129 mW/g

Maximum value of SAR (measured) = 0.268 mW/g

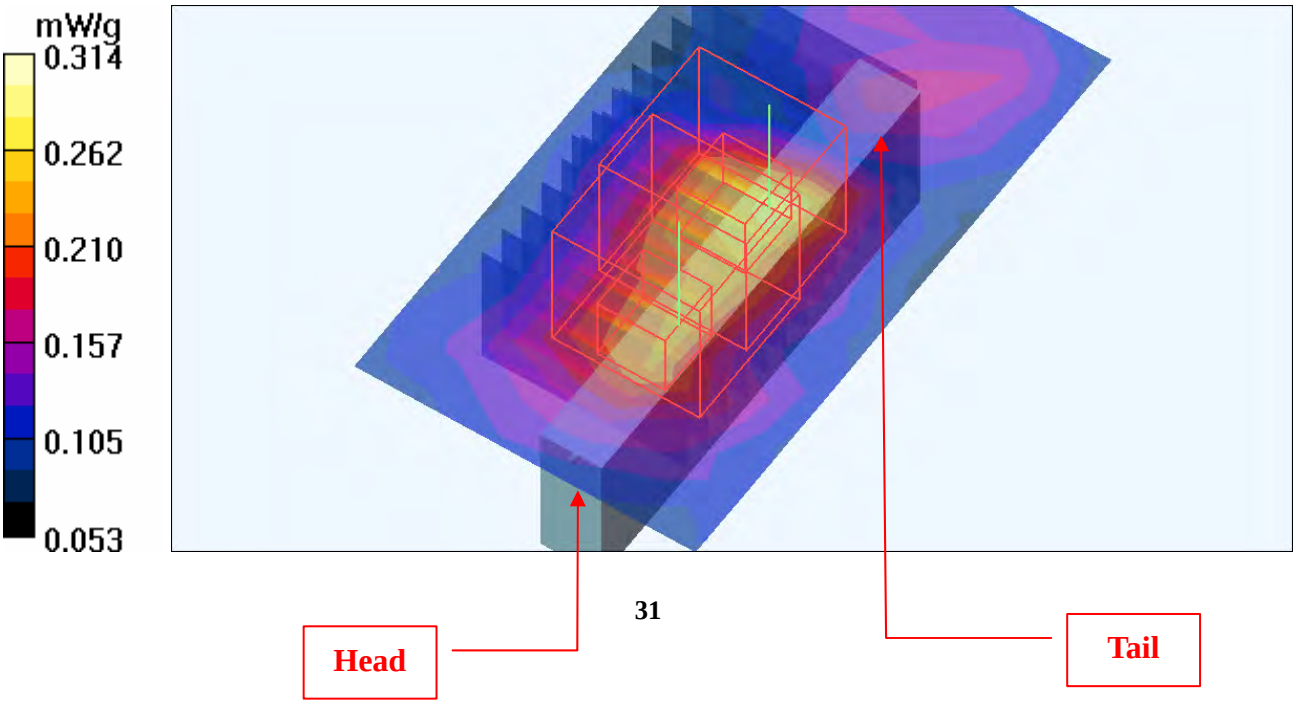

Date/Time: 2009/4/24 03:39:41

Test Laboratory: Bureau Veritas ADT

M23-11a-Ch149

DUT: Wireless-N USB Network Adapter with Dual-Band ; Type: WUSB600N ver.2

Communication System: 802.11a ; Frequency: 5745 MHz ; Duty Cycle: 1:1 ; Modulation type: BPSK
Medium: MSL5800 Medium parameters used: f = 5745 MHz; σ = 6 mho/m; ε_r = 49.2; ρ = 1000 kg/m^3
Phantom section: Flat Section ; Separation distance : 5 mm (The front side of the EUT to the Phantom)

DASY4 Configuration:
- Probe: EX3DV3 - SN3504 ; ConvF(3.98, 3.98, 3.98) ; Calibrated: 2009/1/21
- Sensor-Surface: 3mm (Mechanical Surface Detection)
- Electronics: DAE3 Sn510 ; Calibrated: 2009/1/21
- Phantom: SAM 12 ; Type: SAM V4.0 ; Serial: TP 1202
- Measurement SW: DASY4, V4.7 Build 80 ; Postprocessing SW: SEMCAD, V1.8 Build 186

Low Channel 149/Area Scan (6x10x1): Measurement grid: dx=10mm, dy=10mm
Maximum value of SAR (measured) = 0.295 mW/g

Low Channel 149/Zoom Scan (8x8x8)/Cube 0: Measurement grid: dx=4.3mm, dy=4.3mm, dz=3mm
Reference Value = 3.12 V/m
Peak SAR (extrapolated) = 0.852 W/kg
SAR(1 g) = 0.206 mW/g; SAR(10 g) = 0.077 mW/g
Maximum value of SAR (measured) = 0.285 mW/g

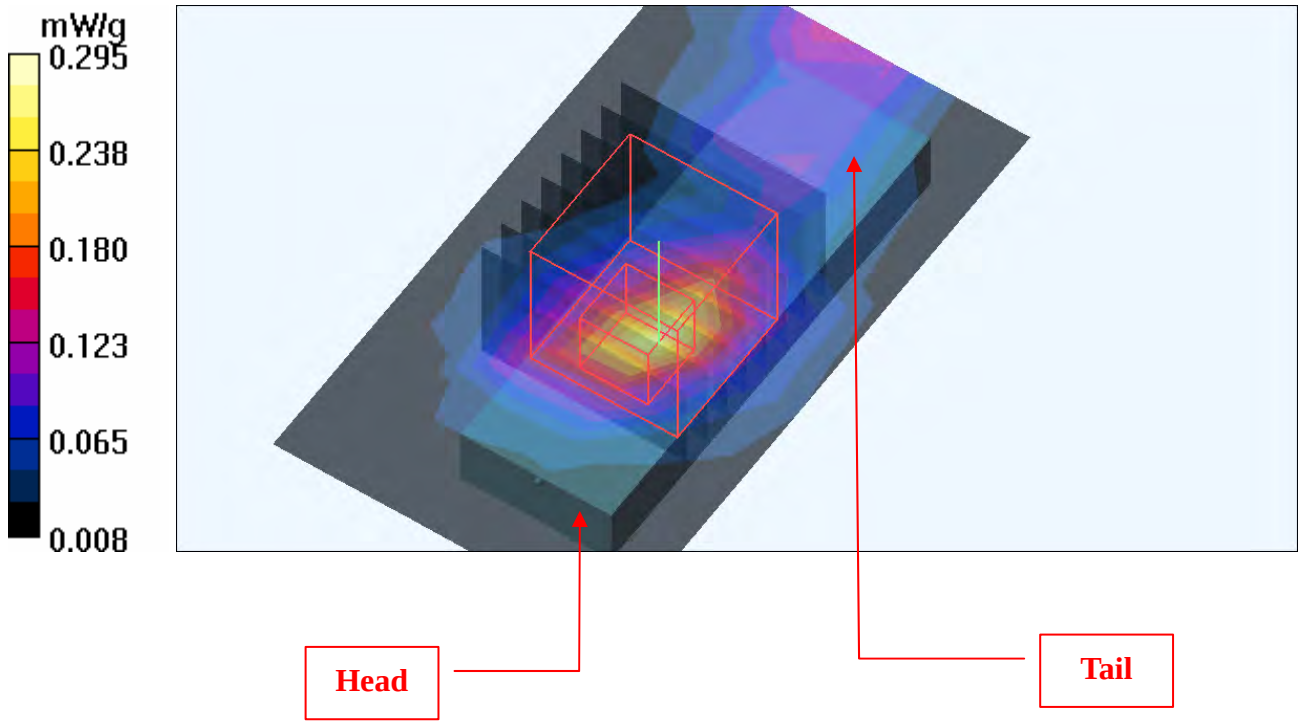

Date/Time: 2009/4/24 06:27:32

Test Laboratory: Bureau Veritas ADT

M24-11aN 20M-Ch149

DUT: Wireless-N USB Network Adapter with Dual-Band ; Type: WUSB600N ver.2

Communication System: 11n 5G span20 ; Frequency: 5745 MHz ; Duty Cycle: 1:1 ; Modulation type: BPSK

Medium: MSL5800 Medium parameters used: f = 5745 MHz; σ = 6 mho/m; ε_r = 49.2; ρ = 1000 kg/m^3

Phantom section: Flat Section ; Separation distance : 5 mm (The front side of the EUT to the Phantom)

DASY4 Configuration:

- Probe: EX3DV3 - SN3504 ; ConvF(3.98, 3.98, 3.98) ; Calibrated: 2009/1/21
- Sensor-Surface: 3mm (Mechanical Surface Detection)
- Electronics: DAE3 Sn510 ; Calibrated: 2009/1/21
- Phantom: SAM 12 ; Type: SAM V4.0 ; Serial: TP 1202
- Measurement SW: DASY4, V4.7 Build 80 ; Postprocessing SW: SEMCAD, V1.8 Build 186

Low Channel 149/Area Scan (6x10x1): Measurement grid: dx=10mm, dy=10mm

Maximum value of SAR (measured) = 0.473 mW/g

Low Channel 149/Zoom Scan (8x8x8)/Cube 0: Measurement grid: dx=4.3mm, dy=4.3mm, dz=3mm

Reference Value = 3.92 V/m

Peak SAR (extrapolated) = 1.52 W/kg

SAR(1 g) = 0.377 mW/g; SAR(10 g) = 0.142 mW/g

Maximum value of SAR (measured) = 0.554 mW/g

Low Channel 149/Zoom Scan (8x8x8)/Cube 1: Measurement grid: dx=4.3mm, dy=4.3mm, dz=3mm

Reference Value = 3.92 V/m

Peak SAR (extrapolated) = 1.07 W/kg

SAR(1 g) = 0.272 mW/g; SAR(10 g) = 0.100 mW/g

Maximum value of SAR (measured) = 0.383 mW/g

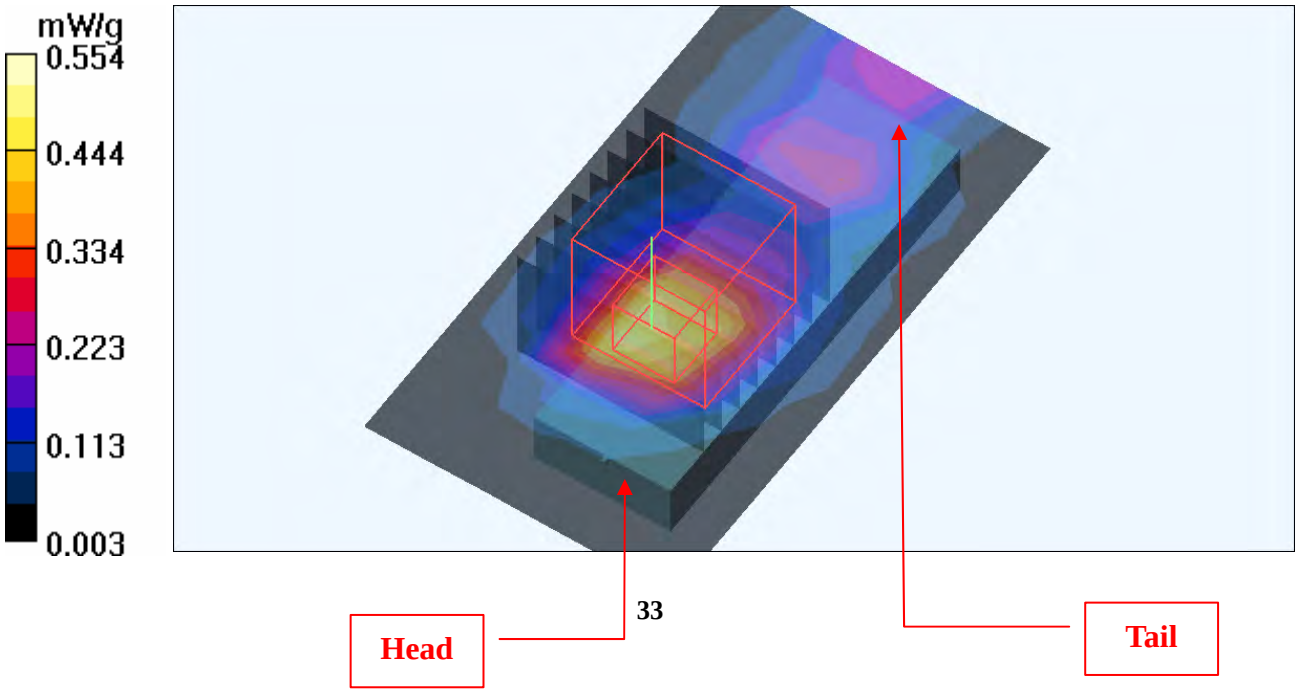

Date/Time: 2009/4/24 09:04:31

Test Laboratory: Bureau Veritas ADT

M25-11aN 40M-Ch151

DUT: Wireless-N USB Network Adapter with Dual-Band ; Type: WUSB600N ver.2

Communication System: 11n 5G span40 ; Frequency: 5755 MHz ; Duty Cycle: 1:1 ; Modulation type: BPSK

Medium: MSL5800 Medium parameters used: f = 5755 MHz; σ = 6.02 mho/m; ε_r = 49.2; ρ = 1000 kg/m^3

Phantom section: Flat Section ; Separation distance : 5 mm (The front side of the EUT to the Phantom)

DASY4 Configuration:

- Probe: EX3DV3 - SN3504 ; ConvF(3.98, 3.98, 3.98) ; Calibrated: 2009/1/21
- Sensor-Surface: 3mm (Mechanical Surface Detection)
- Electronics: DAE3 Sn510 ; Calibrated: 2009/1/21
- Phantom: SAM 12 ; Type: SAM V4.0 ; Serial: TP 1202
- Measurement SW: DASY4, V4.7 Build 80 ; Postprocessing SW: SEMCAD, V1.8 Build 186

Low Channel 151/Area Scan (6x10x1): Measurement grid: dx=10mm, dy=10mm

Maximum value of SAR (measured) = 0.372 mW/g

Low Channel 151/Zoom Scan (8x8x8)/Cube 0: Measurement grid: dx=4.3mm, dy=4.3mm, dz=3mm

Reference Value = 4.11 V/m

Peak SAR (extrapolated) = 1.11 W/kg

SAR(1 g) = 0.283 mW/g; SAR(10 g) = 0.106 mW/g

Maximum value of SAR (measured) = 0.403 mW/g

Low Channel 151/Zoom Scan (8x8x8)/Cube 1: Measurement grid: dx=4.3mm, dy=4.3mm, dz=3mm

Reference Value = 4.11 V/m

Peak SAR (extrapolated) = 0.866 W/kg

SAR(1 g) = 0.203 mW/g; SAR(10 g) = 0.076 mW/g

Maximum value of SAR (measured) = 0.290 mW/g

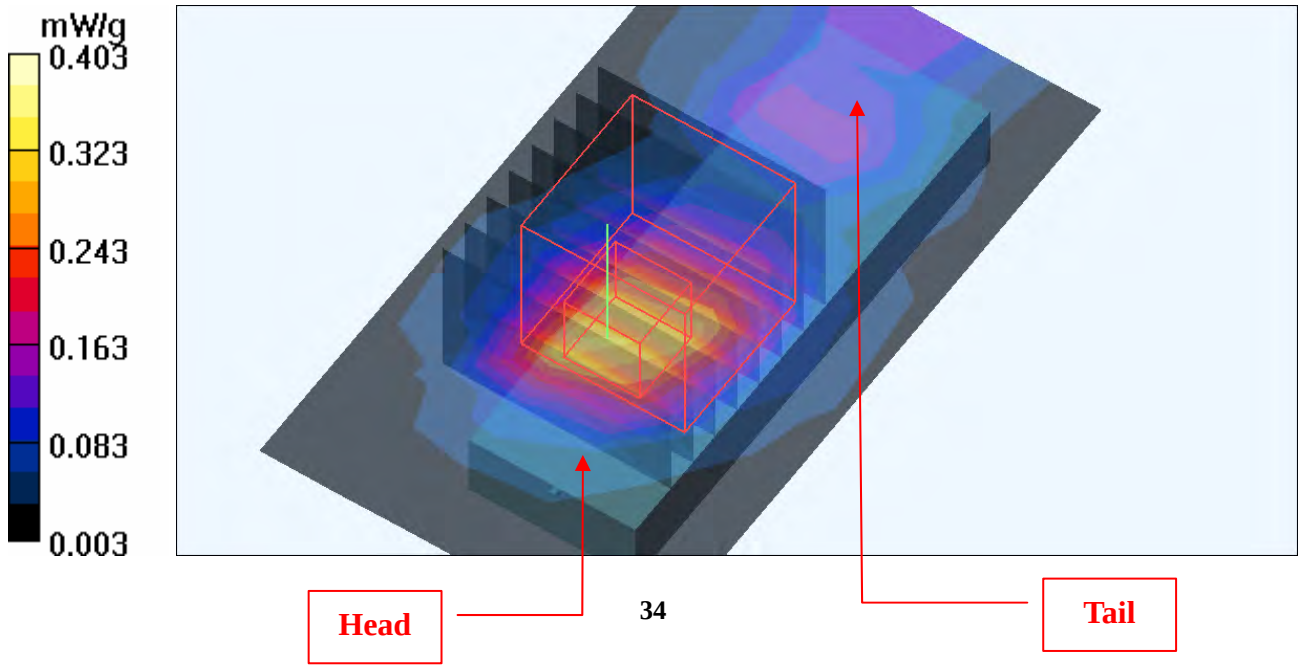

Date/Time: 2009/4/24 12:30:32

Test Laboratory: Bureau Veritas ADT

M26-11a-Ch149

DUT: Wireless-N USB Network Adapter with Dual-Band ; Type: WUSB600N ver.2

Communication System: 802.11a ; Frequency: 5745 MHz ; Duty Cycle: 1:1 ; Modulation type: BPSK
Medium: MSL5800 Medium parameters used: f = 5745 MHz; σ = 6 mho/m; ε_r = 49.2; ρ = 1000 kg/m^3
Phantom section: Flat Section ; Separation distance : 5 mm (The edge side of the EUT to the Phantom)

DASY4 Configuration:
- Probe: EX3DV3 - SN3504 ; ConvF(3.98, 3.98, 3.98) ; Calibrated: 2009/1/21
- Sensor-Surface: 3mm (Mechanical Surface Detection)
- Electronics: DAE3 Sn510 ; Calibrated: 2009/1/21
- Phantom: SAM 12 ; Type: SAM V4.0 ; Serial: TP 1202
- Measurement SW: DASY4, V4.7 Build 80 ; Postprocessing SW: SEMCAD, V1.8 Build 186

Low Channel 149/Area Scan (6x10x1): Measurement grid: dx=10mm, dy=10mm
Maximum value of SAR (measured) = 0.344 mW/g
Low Channel 149/Zoom Scan (8x8x8)/Cube 0: Measurement grid: dx=4.3mm, dy=4.3mm, dz=3mm
Reference Value = 4.70 V/m
Peak SAR (extrapolated) = 0.836 W/kg
SAR(1 g) = 0.255 mW/g; SAR(10 g) = 0.090 mW/g
Maximum value of SAR (measured) = 0.363 mW/g
Low Channel 149/Zoom Scan (8x8x8)/Cube 1: Measurement grid: dx=4.3mm, dy=4.3mm, dz=3mm
Reference Value = 4.70 V/m
Peak SAR (extrapolated) = 0.508 W/kg
SAR(1 g) = 0.151 mW/g; SAR(10 g) = 0.048 mW/g
Maximum value of SAR (measured) = 0.228 mW/g

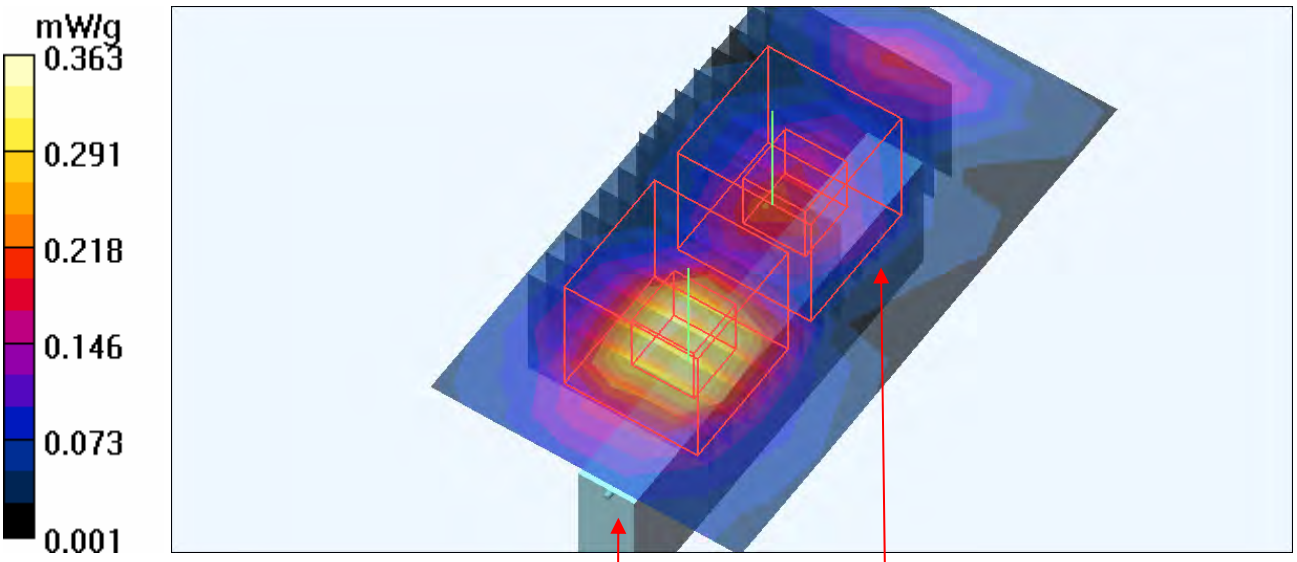

Head

Tail

Date/Time: 2009/4/24 15:45:31

Test Laboratory: Bureau Veritas ADT

M27-11aN 20M-Ch149

DUT: Wireless-N USB Network Adapter with Dual-Band ; Type: WUSB600N ver.2

Communication System: 11n 5G span20 ; Frequency: 5745 MHz ; Duty Cycle: 1:1 ; Modulation type: BPSK

Medium: MSL5800 Medium parameters used: f = 5745 MHz; σ = 6 mho/m; ε_r = 49.2; ρ = 1000 kg/m^3

Phantom section: Flat Section ; Separation distance : 5 mm (The edge side of the EUT to the Phantom)

DASY4 Configuration:

- Probe: EX3DV3 - SN3504 ; ConvF(3.98, 3.98, 3.98) ; Calibrated: 2009/1/21
- Sensor-Surface: 3mm (Mechanical Surface Detection)
- Electronics: DAE3 Sn510 ; Calibrated: 2009/1/21
- Phantom: SAM 12 ; Type: SAM V4.0 ; Serial: TP 1202
- Measurement SW: DASY4, V4.7 Build 80 ; Postprocessing SW: SEMCAD, V1.8 Build 186

Low Channel 149/Area Scan (6x10x1): Measurement grid: dx=10mm, dy=10mm

Maximum value of SAR (measured) = 0.344 mW/g

Low Channel 149/Zoom Scan (8x8x8)/Cube 0: Measurement grid: dx=4.3mm, dy=4.3mm, dz=3mm

Reference Value = 5.74 V/m

Peak SAR (extrapolated) = 1.17 W/kg

SAR(1 g) = 0.303 mW/g; SAR(10 g) = 0.107 mW/g

Maximum value of SAR (measured) = 0.414 mW/g

Low Channel 149/Zoom Scan (8x8x8)/Cube 1: Measurement grid: dx=4.3mm, dy=4.3mm, dz=3mm

Reference Value = 5.74 V/m

Peak SAR (extrapolated) = 0.629 W/kg

SAR(1 g) = 0.186 mW/g; SAR(10 g) = 0.057 mW/g

Maximum value of SAR (measured) = 0.277 mW/g

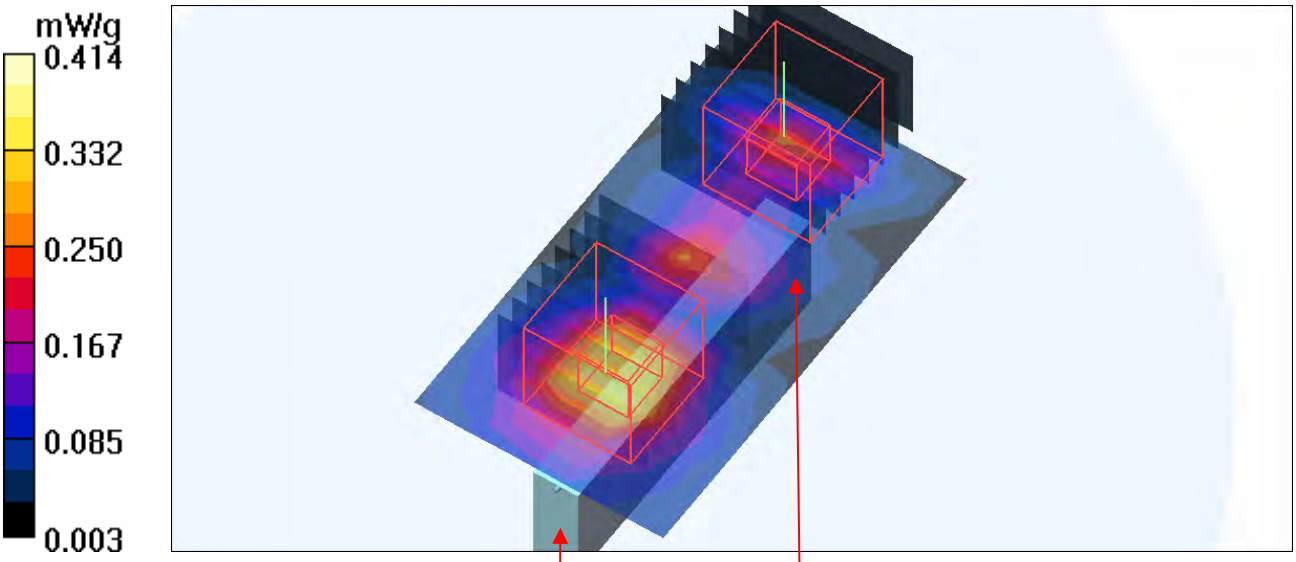

Head

Tail

Date/Time: 2009/4/24 18:54:49

Test Laboratory: Bureau Veritas ADT

M28-11aN 40M-Ch151

DUT: Wireless-N USB Network Adapter with Dual-Band ; Type: WUSB600N ver.2

Communication System: 11n 5G span40 ; Frequency: 5755 MHz ; Duty Cycle: 1:1 ; Modulation type: BPSK

Medium: MSL5800 Medium parameters used: f = 5755 MHz; σ = 6.02 mho/m; ε_r = 49.2; ρ = 1000 kg/m^3

Phantom section: Flat Section ; Separation distance : 5 mm (The edge side of the EUT to the Phantom)

DASY4 Configuration:

- Probe: EX3DV3 - SN3504 ; ConvF(3.98, 3.98, 3.98) ; Calibrated: 2009/1/21
- Sensor-Surface: 3mm (Mechanical Surface Detection)
- Electronics: DAE3 Sn510 ; Calibrated: 2009/1/21
- Phantom: SAM 12 ; Type: SAM V4.0 ; Serial: TP 1202
- Measurement SW: DASY4, V4.7 Build 80 ; Postprocessing SW: SEMCAD, V1.8 Build 186

Low Channel 151/Area Scan (6x10x1): Measurement grid: dx=10mm, dy=10mm

Maximum value of SAR (measured) = 0.301 mW/g

Low Channel 151/Zoom Scan (8x8x8)/Cube 0: Measurement grid: dx=4.3mm, dy=4.3mm, dz=3mm

Reference Value = 5.04 V/m

Peak SAR (extrapolated) = 1.02 W/kg

SAR(1 g) = 0.278 mW/g; SAR(10 g) = 0.104 mW/g

Maximum value of SAR (measured) = 0.381 mW/g

Low Channel 151/Zoom Scan (8x8x8)/Cube 1: Measurement grid: dx=4.3mm, dy=4.3mm, dz=3mm

Reference Value = 5.04 V/m

Peak SAR (extrapolated) = 0.763 W/kg

SAR(1 g) = 0.186 mW/g; SAR(10 g) = 0.063 mW/g

Maximum value of SAR (measured) = 0.272 mW/g

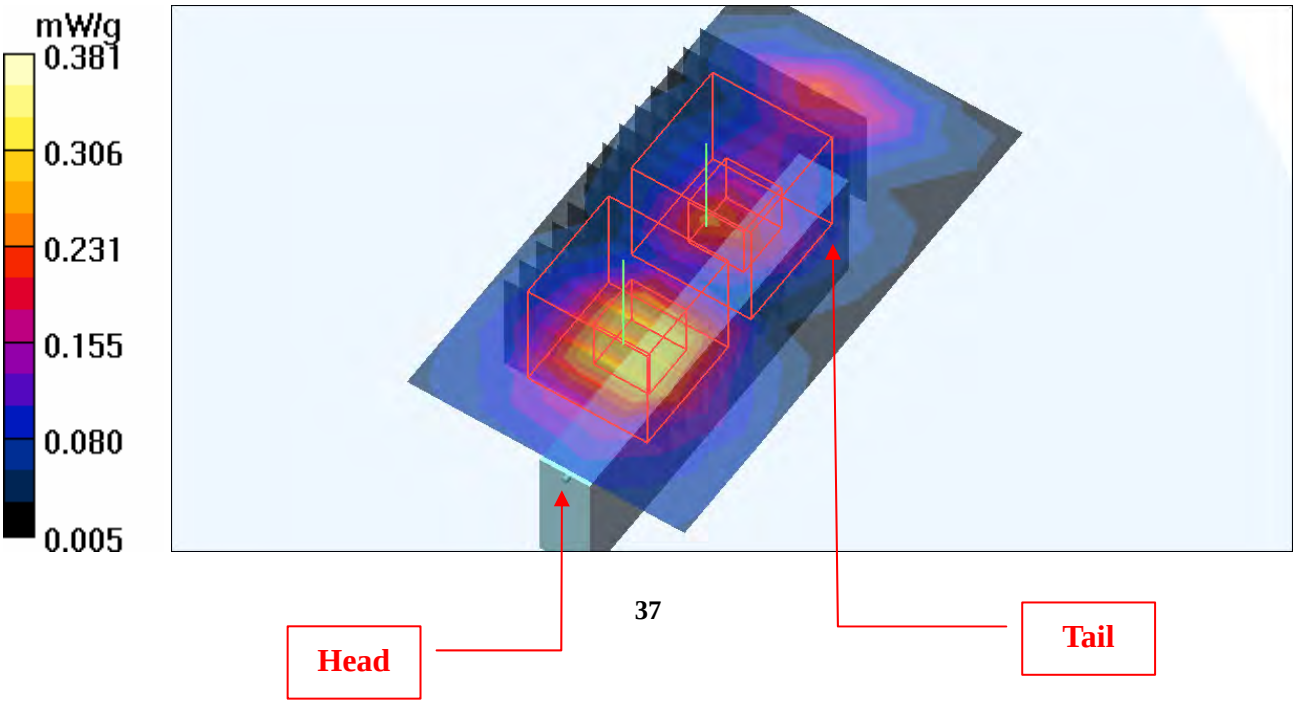

Date/Time: 2009/4/27 13:33:43

Test Laboratory: Bureau Veritas ADT

System Validation Check-MSL 2450MHz

DUT: Dipole 2450 MHz ; Type: D2450V2 ; Serial: 716 ; Test Frequency: 2450 MHz

Communication System: CW ; Frequency: 2450 MHz; Duty Cycle: 1:1; Modulation type: CW
Medium: MSL2450;Medium parameters used: f = 2450 MHz; σ = 2 mho/m; ε_r = 53.8; ρ = 1000 kg/m^3 ;
Liquid level : 151 mm
Phantom section: Flat Section ; Separation distance : 10 mm (The feetpoint of the dipole to the Phantom)Air temp. : 23.2 degrees ; Liquid temp. : 22.0 degrees

DASY4 Configuration:
- Probe: EX3DV3 - SN3504 ; ConvF(7.53, 7.53, 7.53) ; Calibrated: 2009/1/21
- Sensor-Surface: 3mm (Mechanical Surface Detection)
- Electronics: DAE3 Sn510; Calibrated: 2009/1/21
- Phantom: SAM 12; Type: SAM V4.0; Serial: TP 1202
- Measurement SW: DASY4, V4.7 Build 80; Postprocessing SW: SEMCAD, V1.8 Build 186

d=10mm, Pin=250mW/Area Scan (5x7x1): Measurement grid: dx=15mm, dy=15mm
Maximum value of SAR (measured) = 16.8 mW/g

d=10mm, Pin=250mW/Zoom Scan (7x7x7)/Cube 0: Measurement grid: dx=5mm, dy=5mm, dz=5mm
Reference Value = 92.9 V/m; Power Drift = -0.105 dB
Peak SAR (extrapolated) = 26.0 W/kg
SAR(1 g) = 12.6 mW/g; SAR(10 g) = 5.86 mW/g
Maximum value of SAR (measured) = 16.4 mW/g

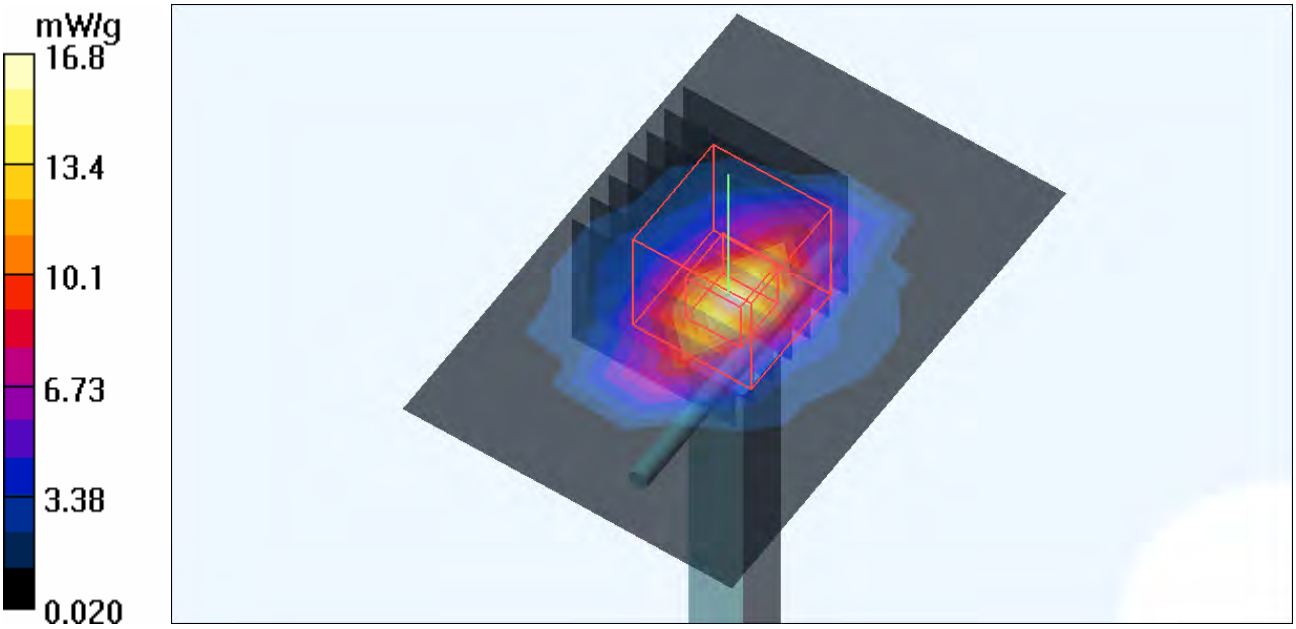

Date/Time: 2009/4/23 01:42:15

Test Laboratory: Bureau Veritas ADT

System Validation Check-MSL 5GHz

DUT: Dipole 5 GHz ; Type: D5GHzV2 ; Serial: 1019 ; Test Frequency: 5800 MHz

Communication System: CW ; Frequency: 5800 MHz; Duty Cycle: 1:1; Modulation type: CW
Medium: MSL5800;Medium parameters used: f = 5800 MHz; σ = 6.05 mho/m; ε_r = 49.7; ρ = 1000 kg/m^3 ; Liquid level : 153 mm
Phantom section: Flat Section ; Separation distance : 10 mm (The feetpoint of the dipole to the Phantom)Air temp. : 22.8 degrees ; Liquid temp. : 21.7 degrees

DASY4 Configuration:
- Probe: EX3DV3 - SN3504 ; ConvF(3.98, 3.98, 3.98) ; Calibrated: 2009/1/21
- Sensor-Surface: 3mm (Mechanical Surface Detection)
- Electronics: DAE3 Sn510; Calibrated: 2009/1/21
- Phantom: SAM 12; Type: SAM V4.0; Serial: TP 1202
- Measurement SW: DASY4, V4.7 Build 80; Postprocessing SW: SEMCAD, V1.8 Build 186

f=5800, d=10mm, Pin=100mW/Area Scan (6x6x1): Measurement grid: dx=10mm, dy=10mm
Maximum value of SAR (measured) = 7.08 mW/g

f=5800, d=10mm, Pin=100mW/Zoom Scan (8x8x8)/Cube 0: Measurement grid: dx=4.3mm, dy=4.3mm, dz=3mm
Reference Value = 44.4 V/m; Power Drift = -0.015 dB
Peak SAR (extrapolated) = 30.7 W/kg
SAR(1 g) = 7.41 mW/g; SAR(10 g) = 2.07 mW/g
Maximum value of SAR (measured) = 10.5 mW/g

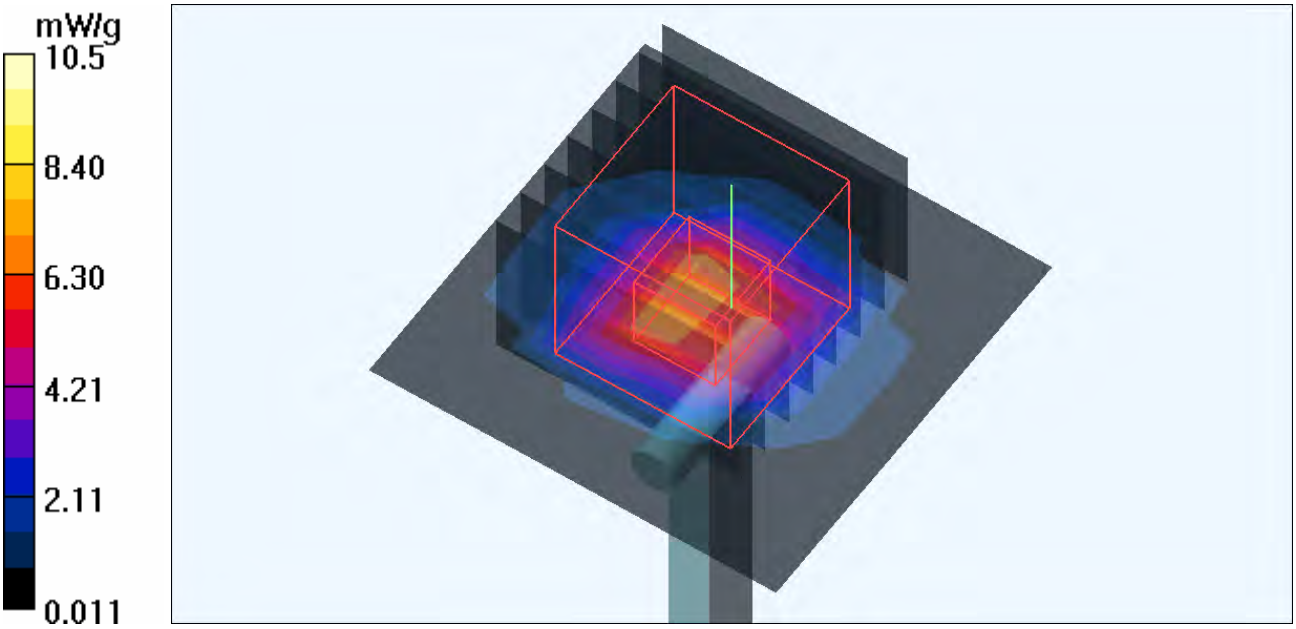

Date/Time: 2009/4/24 01:52:32

Test Laboratory: Bureau Veritas ADT

System Validation Check-MSL 5GHz

DUT: Dipole 5 GHz ; Type: D5GHzV2 ; Serial: 1019 ; Test Frequency: 5800 MHz

Communication System: CW ; Frequency: 5800 MHz; Duty Cycle: 1:1; Modulation type: CW
Medium: MSL5800;Medium parameters used: f = 5800 MHz; σ = 6.09 mho/m; ε_r = 49.1; ρ = 1000 kg/m^3 ; Liquid level : 150 mm
Phantom section: Flat Section ; Separation distance : 10 mm (The feetpoint of the dipole to the Phantom)Air temp. : 22.4 degrees ; Liquid temp. : 21.5 degrees

DASY4 Configuration:
- Probe: EX3DV3 - SN3504 ; ConvF(3.98, 3.98, 3.98) ; Calibrated: 2009/1/21
- Sensor-Surface: 3mm (Mechanical Surface Detection)
- Electronics: DAE3 Sn510; Calibrated: 2009/1/21
- Phantom: SAM 12; Type: SAM V4.0; Serial: TP 1202
- Measurement SW: DASY4, V4.7 Build 80; Postprocessing SW: SEMCAD, V1.8 Build 186

f=5800, d=10mm, Pin=100mW/Area Scan (6x6x1): Measurement grid: dx=10mm, dy=10mm
Maximum value of SAR (measured) = 7.08 mW/g
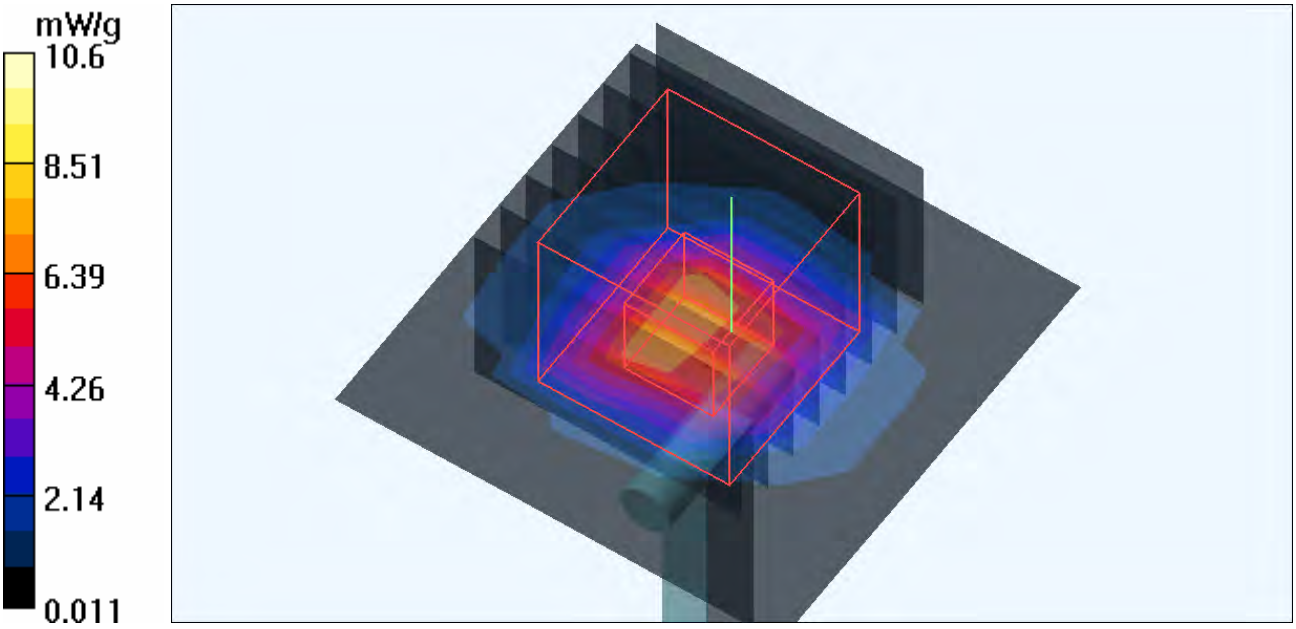
f=5800, d=10mm, Pin=100mW/Zoom Scan (8x8x8)/Cube 0: Measurement grid: dx=4.3mm, dy=4.3mm, dz=3mm
Reference Value = 45.7 V/m; Power Drift = -0.014 dB
Peak SAR (extrapolated) = 31.2 W/kg
SAR(1 g) = 7.39 mW/g; SAR(10 g) = 2.07 mW/g
Maximum value of SAR (measured) = 10.6 mW/g