APPENDIX A: TEST DATA

Liquid Level Photo

MSL 5800MHz D=153mm

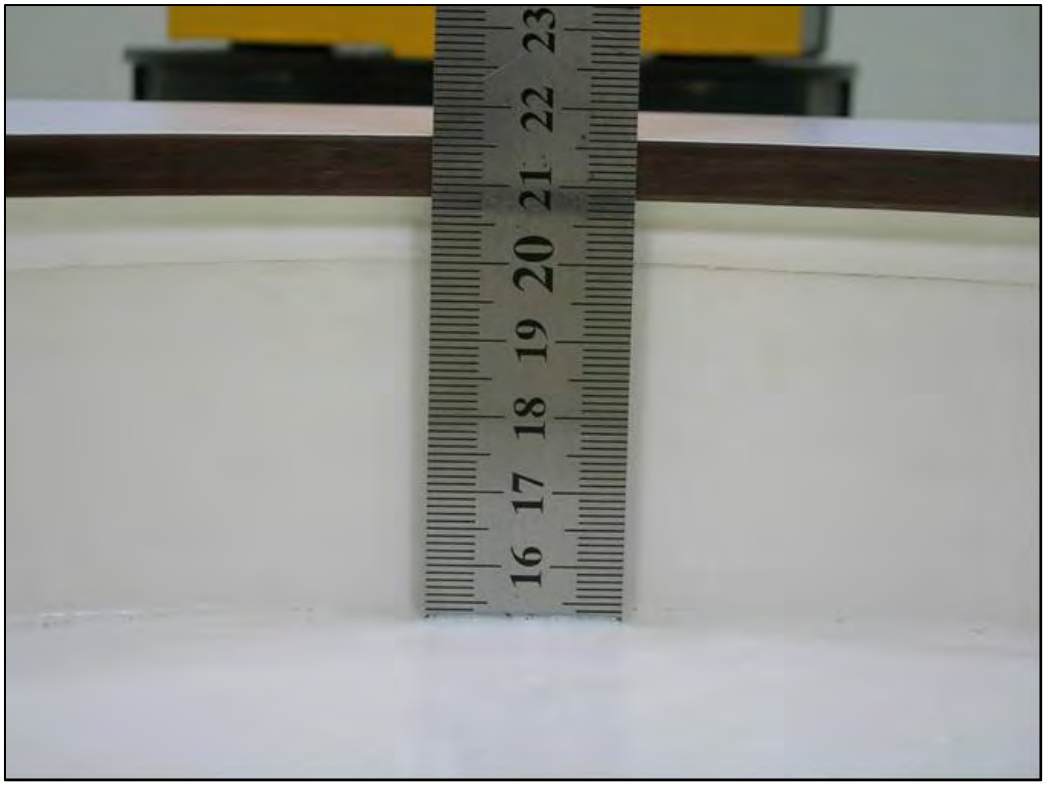

MSL 5800MHz D=150mm

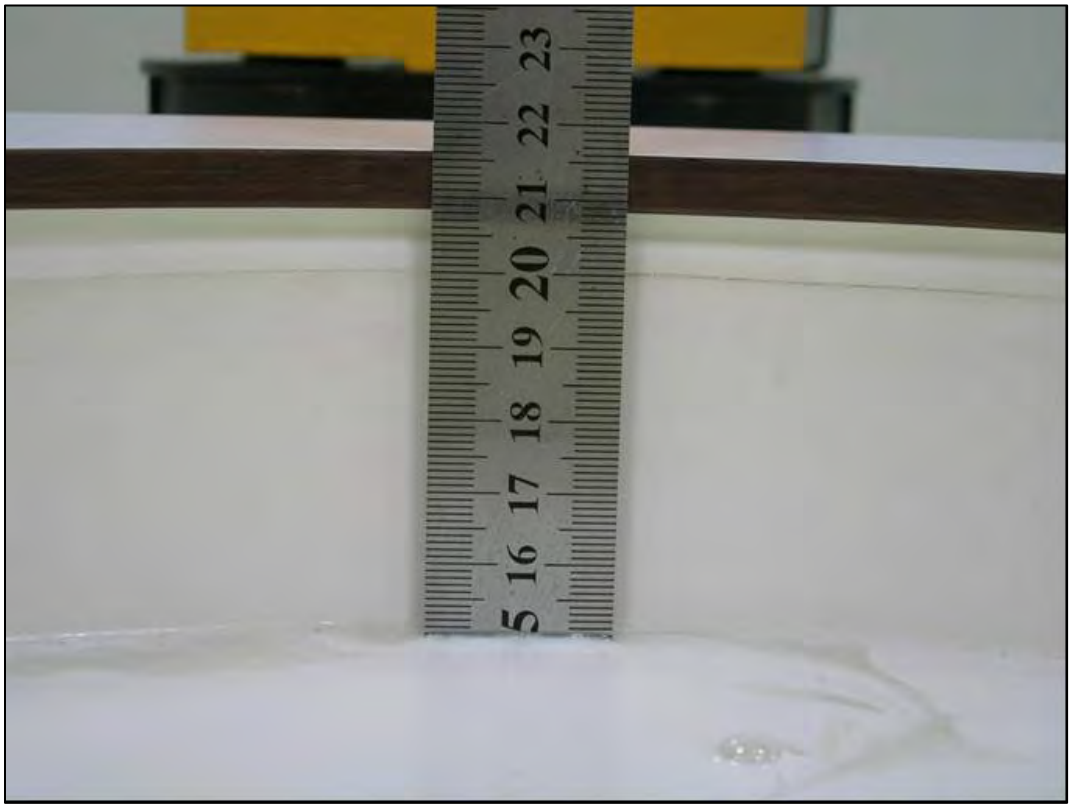

Date/Time: 2009/4/23 02:37:32

Test Laboratory: Bureau Veritas ADT

M01-11a-Ch40

DUT: Wireless-N USB Network Adapter with Dual-Band ; Type: WUSB600N ver.2

Communication System: 802.11a ; Frequency: 5200 MHz ; Duty Cycle: 1:1 ; Modulation type: BPSK
Medium: MSL5800 Medium parameters used: f = 5200 MHz; σ = 5.16 mho/m; εr = 50.9; ρ = 1000 kg/m^3
Phantom section: Flat Section ; Separation distance : 5 mm (The bottom side of the EUT to the Phantom)

DASY4 Configuration:
- Probe: EX3DV3 - SN3504 ; ConvF(4.38, 4.38, 4.38) ; Calibrated: 2009/1/21
- Sensor-Surface: 3mm (Mechanical Surface Detection)
- Electronics: DAE3 Sn510 ; Calibrated: 2009/1/21
- Phantom: SAM 12 ; Type: SAM V4.0 ; Serial: TP 1202
- Measurement SW: DASY4, V4.7 Build 80 ; Postprocessing SW: SEMCAD, V1.8 Build 186

Mid Channel 40/Area Scan (6x10x1): Measurement grid: dx=10mm, dy=10mm
Maximum value of SAR (measured) = 0.581 mW/g

Mid Channel 40/Zoom Scan (8x8x8)/Cube 0: Measurement grid: dx=4.3mm, dy=4.3mm, dz=3mm
Reference Value = 13.5 V/m
Peak SAR (extrapolated) = 1.40 W/kg
SAR(1 g) = 0.420 mW/g; SAR(10 g) = 0.167 mW/g
Maximum value of SAR (measured) = 0.607 mW/g

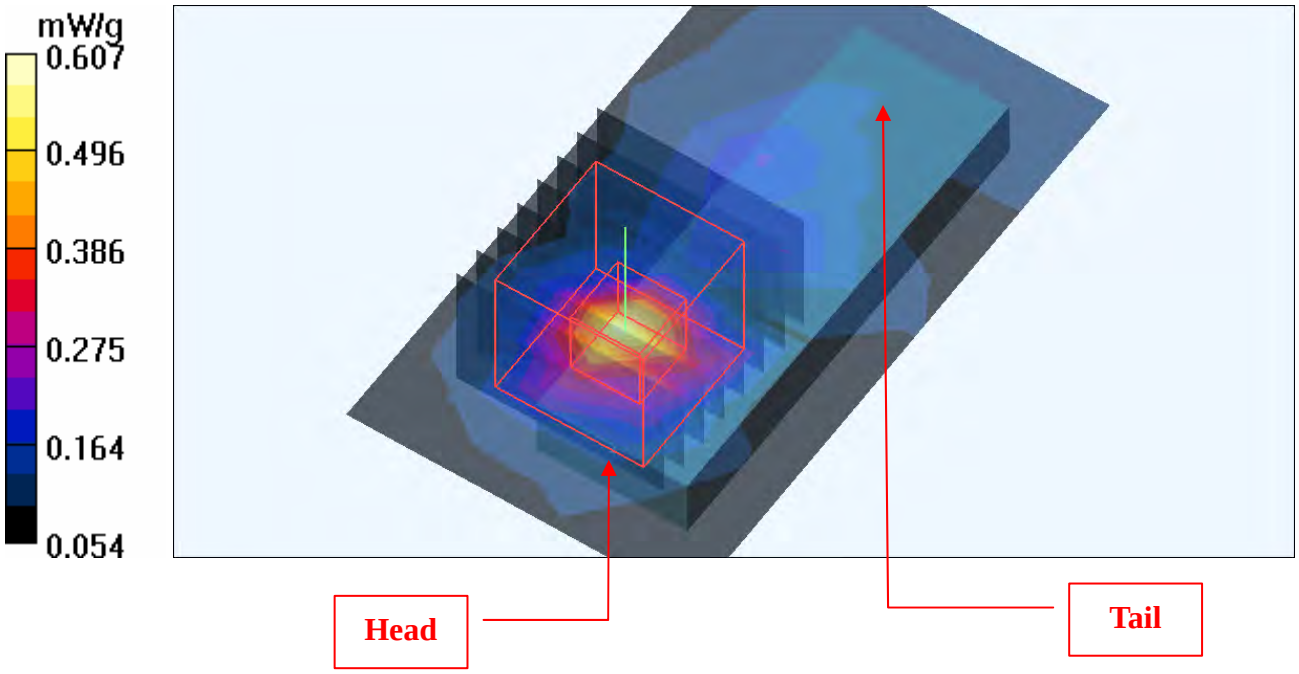

Date/Time: 2009/4/23 03:12:52

Test Laboratory: Bureau Veritas ADT

M01-11a-Ch64

DUT: Wireless-N USB Network Adapter with Dual-Band ; Type: WUSB600N ver.2

Communication System: 802.11a ; Frequency: 5320 MHz ; Duty Cycle: 1:1 ; Modulation type: BPSK
Medium: MSL5800 Medium parameters used: f = 5320 MHz; σ = 5.34 mho/m; εr = 50.7; ρ = 1000 kg/m^3
Phantom section: Flat Section ; Separation distance : 5 mm (The bottom side of the EUT to the Phantom)

DASY4 Configuration:
- Probe: EX3DV3 - SN3504 ; ConvF(4.06, 4.06, 4.06) ; Calibrated: 2009/1/21
- Sensor-Surface: 3mm (Mechanical Surface Detection)
- Electronics: DAE3 Sn510 ; Calibrated: 2009/1/21
- Phantom: SAM 12 ; Type: SAM V4.0 ; Serial: TP 1202
- Measurement SW: DASY4, V4.7 Build 80 ; Postprocessing SW: SEMCAD, V1.8 Build 186

High Channel 64/Area Scan (6x10x1): Measurement grid: dx=10mm, dy=10mm
Maximum value of SAR (measured) = 1.08 mW/g

High Channel 64/Zoom Scan (8x8x8)/Cube 0: Measurement grid: dx=4.3mm, dy=4.3mm, dz=3mm
Reference Value = 11.1 V/m
Peak SAR (extrapolated) = 2.49 W/kg
SAR(1 g) = 0.721 mW/g; SAR(10 g) = 0.266 mW/g
Maximum value of SAR (measured) = 1.05 mW/g

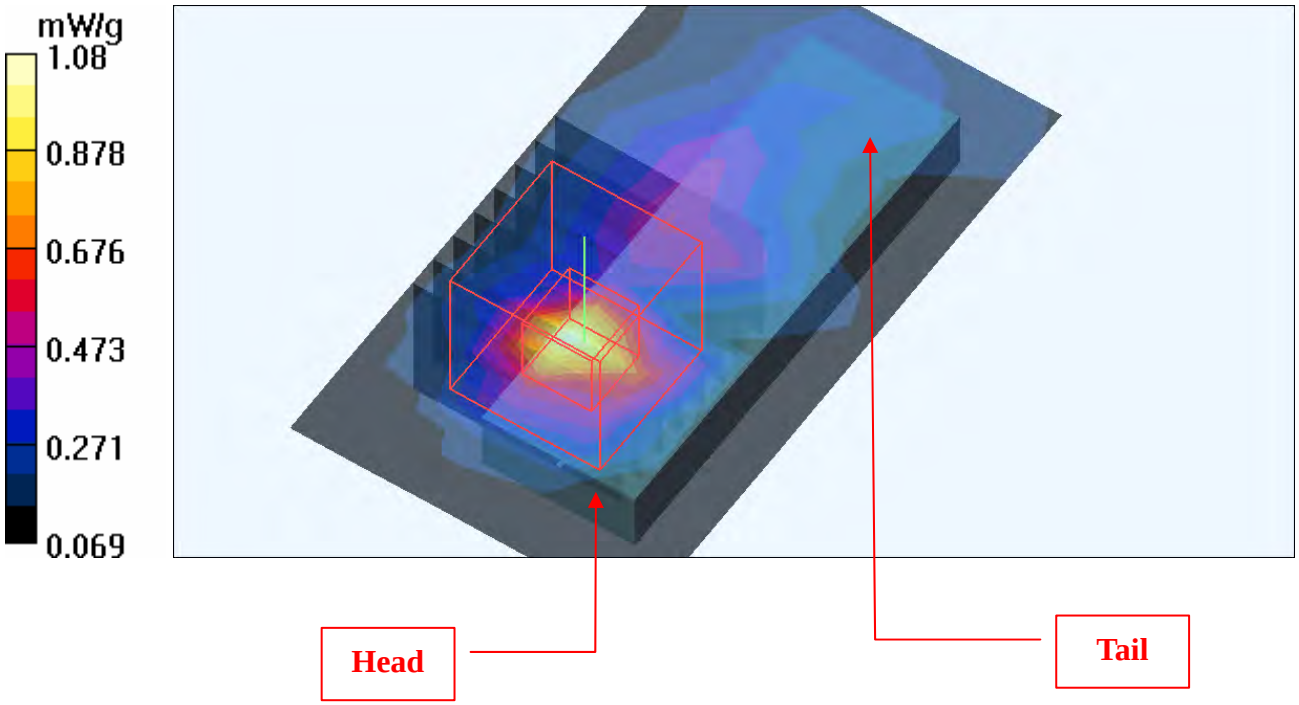

Date/Time: 2009/4/23 03:36:17

Test Laboratory: Bureau Veritas ADT

M01-11a-Ch100

DUT: Wireless-N USB Network Adapter with Dual-Band ; Type: WUSB600N ver.2

Communication System: 802.11a ; Frequency: 5500 MHz ; Duty Cycle: 1:1 ; Modulation type: BPSK
Medium: MSL5800 Medium parameters used: f = 5500 MHz; σ = 5.6 mho/m; εr = 50.3; ρ = 1000 kg/m^3
Phantom section: Flat Section ; Separation distance : 5 mm (The bottom side of the EUT to the Phantom)

DASY4 Configuration:
- Probe: EX3DV3 - SN3504 ; ConvF(3.98, 3.98, 3.98) ; Calibrated: 2009/1/21
- Sensor-Surface: 3mm (Mechanical Surface Detection)
- Electronics: DAE3 Sn510 ; Calibrated: 2009/1/21
- Phantom: SAM 12 ; Type: SAM V4.0 ; Serial: TP 1202
- Measurement SW: DASY4, V4.7 Build 80 ; Postprocessing SW: SEMCAD, V1.8 Build 186

Low Channel 100/Area Scan (6x10x1): Measurement grid: dx=10mm, dy=10mm
Maximum value of SAR (measured) = 0.749 mW/g

Low Channel 100/Zoom Scan (8x8x8)/Cube 0: Measurement grid: dx=4.3mm, dy=4.3mm, dz=3mm
Reference Value = 8.06 V/m
Peak SAR (extrapolated) = 2.12 W/kg
SAR(1 g) = 0.551 mW/g; SAR(10 g) = 0.221 mW/g
Maximum value of SAR (measured) = 0.734 mW/g

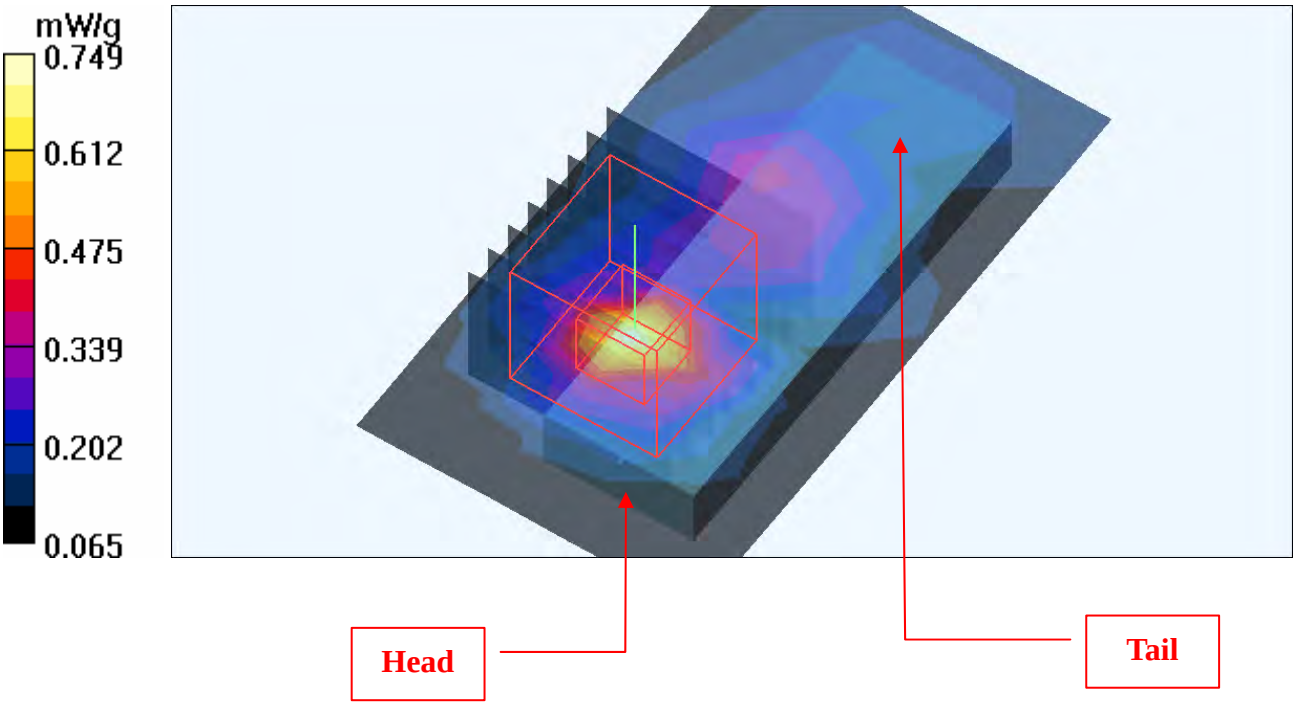

Date/Time: 2009/4/23 03:58:42

Test Laboratory: Bureau Veritas ADT

M01-11a-Ch104

DUT: Wireless-N USB Network Adapter with Dual-Band ; Type: WUSB600N ver.2

Communication System: 802.11a ; Frequency: 5520 MHz ; Duty Cycle: 1:1 ; Modulation type: BPSK
Medium: MSL5800 Medium parameters used: f = 5520 MHz; σ = 5.63 mho/m; εr = 50.2; ρ = 1000 kg/m^3
Phantom section: Flat Section ; Separation distance : 5 mm (The bottom side of the EUT to the Phantom)

DASY4 Configuration:
- Probe: EX3DV3 - SN3504 ; ConvF(3.98, 3.98, 3.98) ; Calibrated: 2009/1/21
- Sensor-Surface: 3mm (Mechanical Surface Detection)
- Electronics: DAE3 Sn510 ; Calibrated: 2009/1/21
- Phantom: SAM 12 ; Type: SAM V4.0 ; Serial: TP 1202
- Measurement SW: DASY4, V4.7 Build 80 ; Postprocessing SW: SEMCAD, V1.8 Build 186

Mid Channel 104/Area Scan (6x10x1): Measurement grid: dx=10mm, dy=10mm
Maximum value of SAR (measured) = 0.571 mW/g

Mid Channel 104/Zoom Scan (8x8x8)/Cube 0: Measurement grid: dx=4.3mm, dy=4.3mm, dz=3mm
Reference Value = 7.11 V/m
Peak SAR (extrapolated) = 1.61 W/kg
SAR(1 g) = 0.417 mW/g; SAR(10 g) = 0.180 mW/g
Maximum value of SAR (measured) = 0.551 mW/g

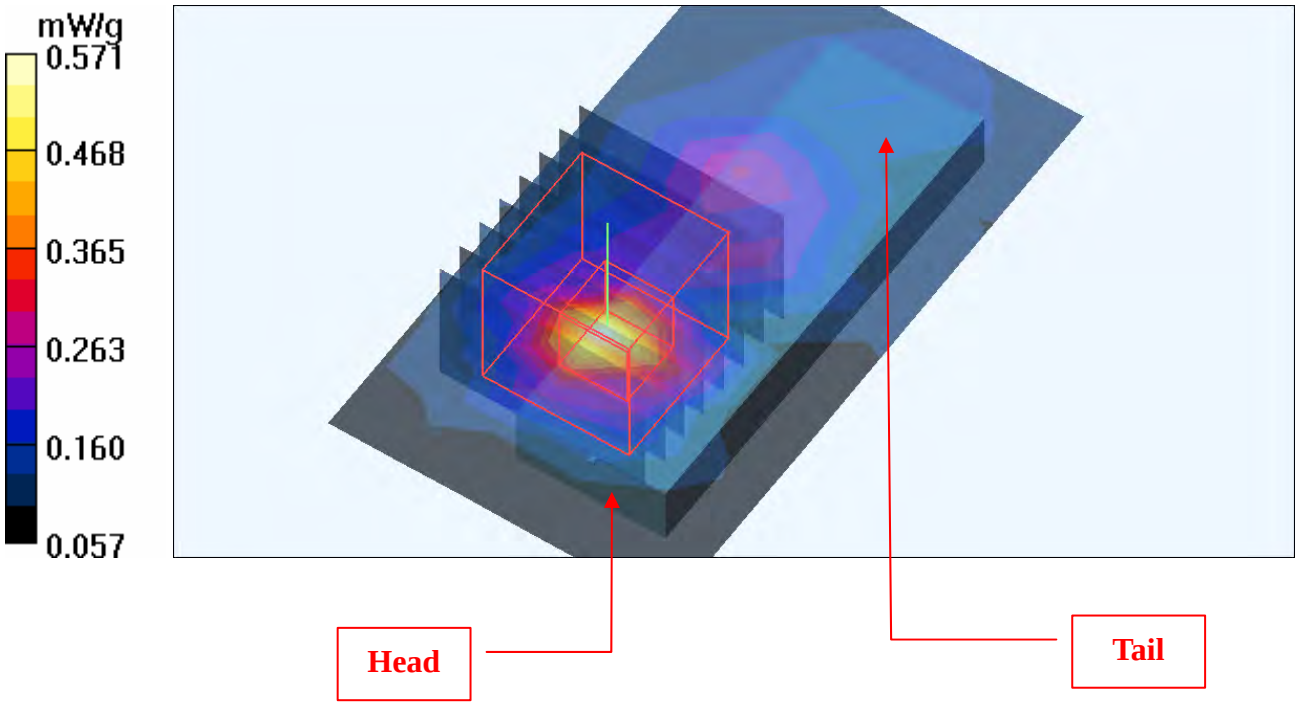

Date/Time: 2009/4/23 04:21:07

Test Laboratory: Bureau Veritas ADT

M01-11a-Ch116

DUT: Wireless-N USB Network Adapter with Dual-Band ; Type: WUSB600N ver.2

Communication System: 802.11a ; Frequency: 5580 MHz ; Duty Cycle: 1:1 ; Modulation type: BPSK
Medium: MSL5800 Medium parameters used: f = 5580 MHz; σ = 5.71 mho/m; εr = 50.1; ρ = 1000 kg/m^3
Phantom section: Flat Section ; Separation distance : 5 mm (The bottom side of the EUT to the Phantom)

DASY4 Configuration:
- Probe: EX3DV3 - SN3504 ; ConvF(3.91, 3.91, 3.91) ; Calibrated: 2009/1/21
- Sensor-Surface: 3mm (Mechanical Surface Detection)
- Electronics: DAE3 Sn510 ; Calibrated: 2009/1/21
- Phantom: SAM 12 ; Type: SAM V4.0 ; Serial: TP 1202
- Measurement SW: DASY4, V4.7 Build 80 ; Postprocessing SW: SEMCAD, V1.8 Build 186

Mid Channel 116/Area Scan (6x10x1): Measurement grid: dx=10mm, dy=10mm
Maximum value of SAR (measured) = 0.543 mW/g

Mid Channel 116/Zoom Scan (8x8x8)/Cube 0: Measurement grid: dx=4.3mm, dy=4.3mm, dz=3mm
Reference Value = 6.82 V/m
Peak SAR (extrapolated) = 1.70 W/kg
SAR(1 g) = 0.408 mW/g; SAR(10 g) = 0.178 mW/g
Maximum value of SAR (measured) = 0.527 mW/g

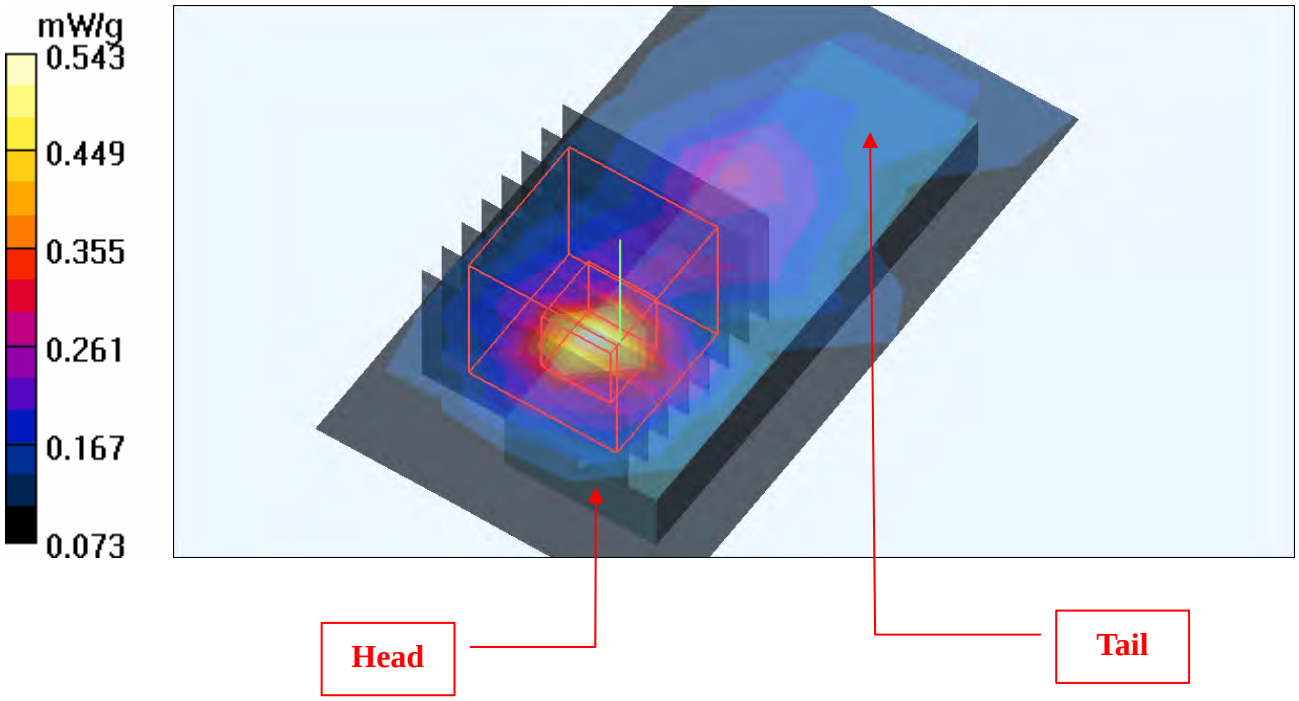

Date/Time: 2009/4/23 04:43:30

Test Laboratory: Bureau Veritas ADT

M01-11a-Ch120

DUT: Wireless-N USB Network Adapter with Dual-Band ; Type: WUSB600N ver.2

Communication System: 802.11a ; Frequency: 5600 MHz ; Duty Cycle: 1:1 ; Modulation type: BPSK
Medium: MSL5800 Medium parameters used: f = 5600 MHz; σ = 5.74 mho/m; εr = 50.1; ρ = 1000 kg/m^3
Phantom section: Flat Section ; Separation distance : 5 mm (The bottom side of the EUT to the Phantom)

DASY4 Configuration:
- Probe: EX3DV3 - SN3504 ; ConvF(3.91, 3.91, 3.91) ; Calibrated: 2009/1/21
- Sensor-Surface: 3mm (Mechanical Surface Detection)
- Electronics: DAE3 Sn510 ; Calibrated: 2009/1/21
- Phantom: SAM 12 ; Type: SAM V4.0 ; Serial: TP 1202
- Measurement SW: DASY4, V4.7 Build 80 ; Postprocessing SW: SEMCAD, V1.8 Build 186

Mid Channel 120/Area Scan (6x10x1): Measurement grid: dx=10mm, dy=10mm
Maximum value of SAR (measured) = 0.622 mW/g

Mid Channel 120/Zoom Scan (8x8x8)/Cube 0: Measurement grid: dx=4.3mm, dy=4.3mm, dz=3mm
Reference Value = 7.60 V/m
Peak SAR (extrapolated) = 1.94 W/kg
SAR(1 g) = 0.458 mW/g; SAR(10 g) = 0.195 mW/g
Maximum value of SAR (measured) = 0.607 mW/g

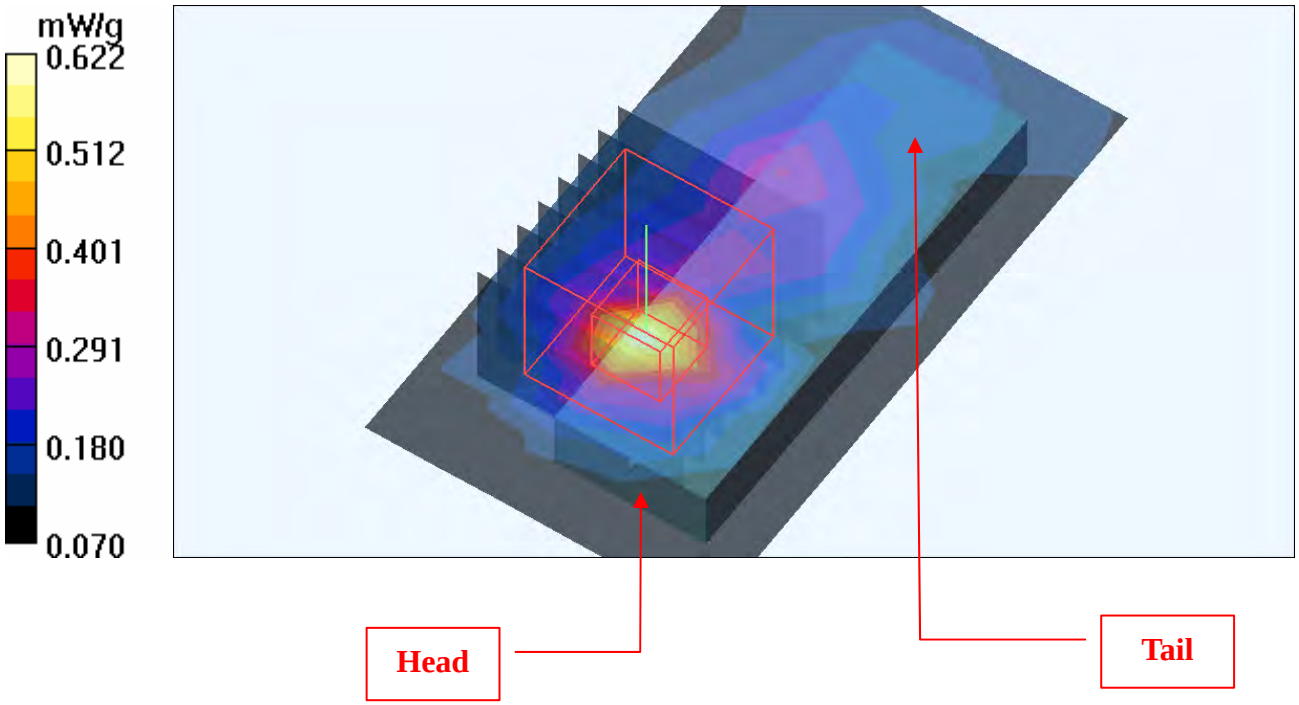

Date/Time: 2009/4/23 05:05:52

Test Laboratory: Bureau Veritas ADT

M01-11a-Ch124

DUT: Wireless-N USB Network Adapter with Dual-Band ; Type: WUSB600N ver.2

Communication System: 802.11a ; Frequency: 5620 MHz ; Duty Cycle: 1:1 ; Modulation type: BPSK
Medium: MSL5800 Medium parameters used: f = 5620 MHz; σ = 5.78 mho/m; εr = 50; ρ = 1000 kg/m^3
Phantom section: Flat Section ; Separation distance : 5 mm (The bottom side of the EUT to the Phantom)

DASY4 Configuration:
- Probe: EX3DV3 - SN3504 ; ConvF(3.91, 3.91, 3.91) ; Calibrated: 2009/1/21
- Sensor-Surface: 3mm (Mechanical Surface Detection)
- Electronics: DAE3 Sn510 ; Calibrated: 2009/1/21
- Phantom: SAM 12 ; Type: SAM V4.0 ; Serial: TP 1202
- Measurement SW: DASY4, V4.7 Build 80 ; Postprocessing SW: SEMCAD, V1.8 Build 186

Mid Channel 124/Area Scan (6x10x1): Measurement grid: dx=10mm, dy=10mm
Maximum value of SAR (measured) = 0.486 mW/g

Mid Channel 124/Zoom Scan (8x8x8)/Cube 0: Measurement grid: dx=4.3mm, dy=4.3mm, dz=3mm
Reference Value = 6.59 V/m
Peak SAR (extrapolated) = 1.68 W/kg
SAR(1 g) = 0.368 mW/g; SAR(10 g) = 0.167 mW/g
Maximum value of SAR (measured) = 0.443 mW/g

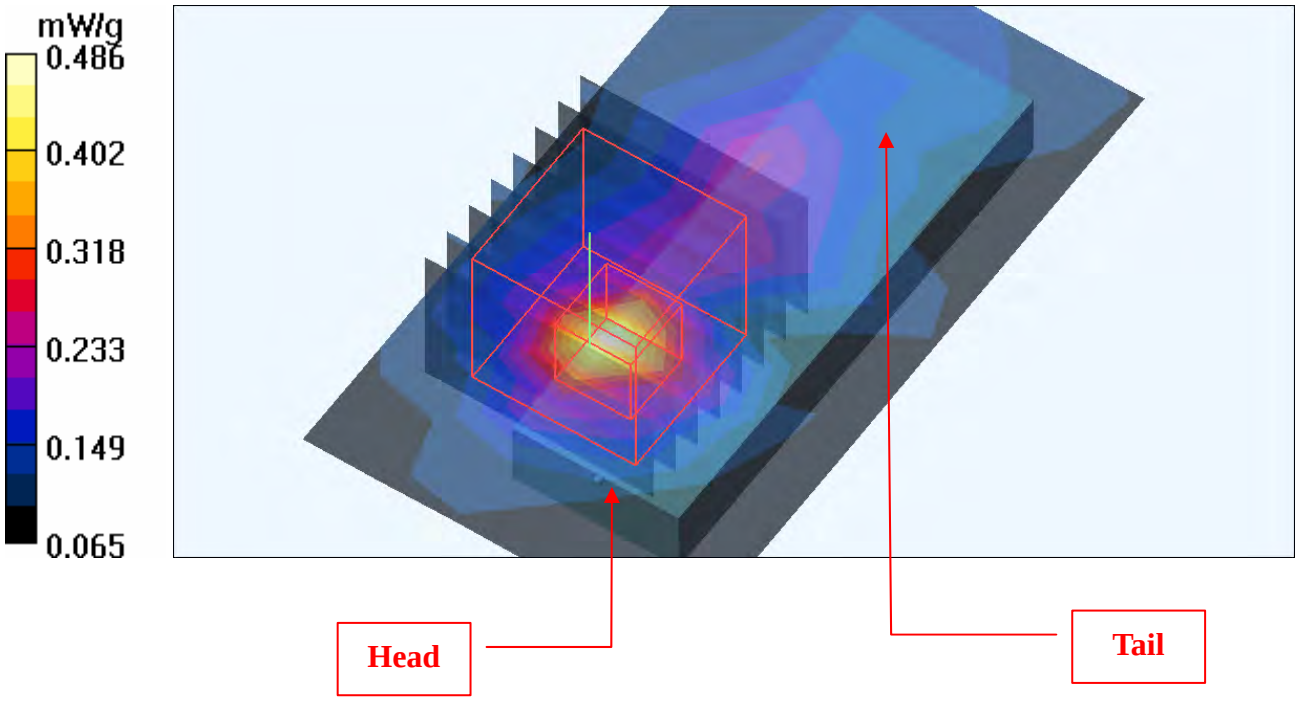

Date/Time: 2009/4/23 05:47:57

Test Laboratory: Bureau Veritas ADT

M01-11a-Ch136

DUT: Wireless-N USB Network Adapter with Dual-Band ; Type: WUSB600N ver.2

Communication System: 802.11a ; Frequency: 5680 MHz ; Duty Cycle: 1:1 ; Modulation type: BPSK
Medium: MSL5800 Medium parameters used: f = 5680 MHz; σ = 5.86 mho/m; εr = 49.9; ρ = 1000 kg/m^3
Phantom section: Flat Section ; Separation distance : 5 mm (The bottom side of the EUT to the Phantom)

DASY4 Configuration:
- Probe: EX3DV3 - SN3504 ; ConvF(3.91, 3.91, 3.91) ; Calibrated: 2009/1/21
- Sensor-Surface: 3mm (Mechanical Surface Detection)
- Electronics: DAE3 Sn510 ; Calibrated: 2009/1/21
- Phantom: SAM 12 ; Type: SAM V4.0 ; Serial: TP 1202
- Measurement SW: DASY4, V4.7 Build 80 ; Postprocessing SW: SEMCAD, V1.8 Build 186

Mid Channel 136/Area Scan (6x10x1): Measurement grid: dx=10mm, dy=10mm
Maximum value of SAR (measured) = 0.557 mW/g

Mid Channel 136/Zoom Scan (8x8x8)/Cube 0: Measurement grid: dx=4.3mm, dy=4.3mm, dz=3mm
Reference Value = 7.83 V/m
Peak SAR (extrapolated) = 1.90 W/kg
SAR(1 g) = 0.420 mW/g; SAR(10 g) = 0.180 mW/g
Maximum value of SAR (measured) = 0.525 mW/g

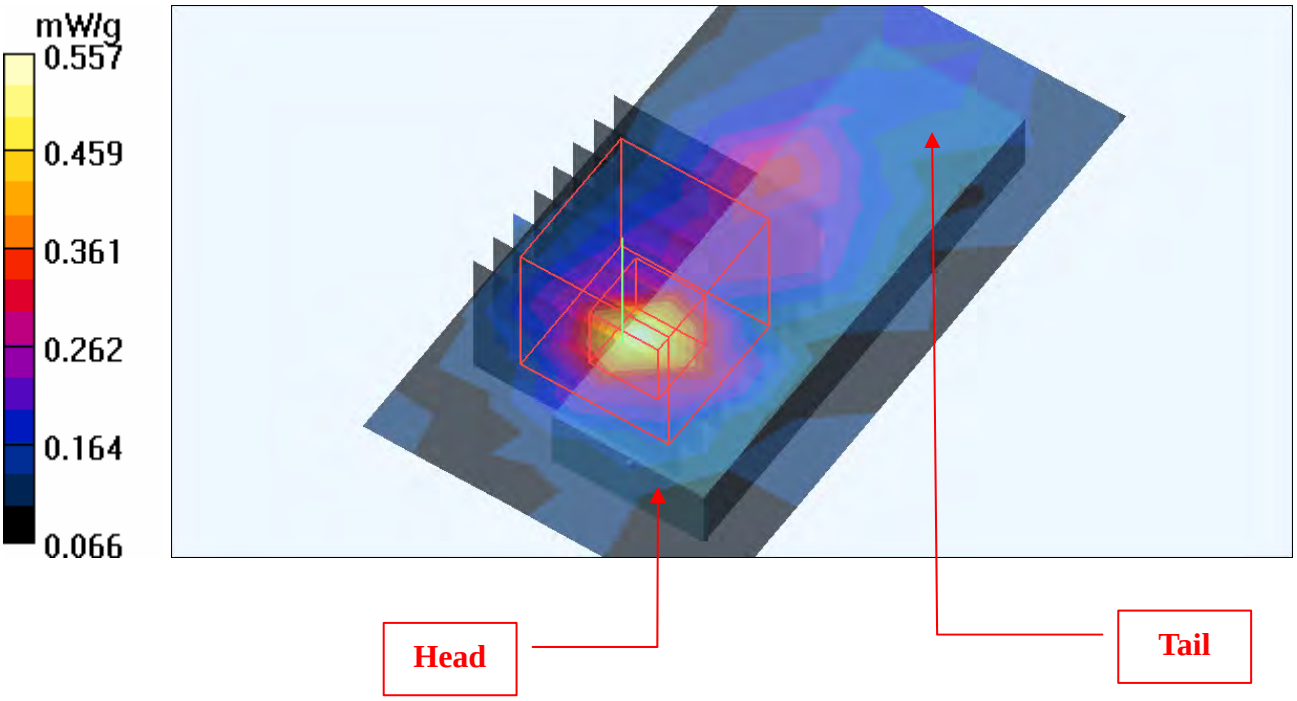

Date/Time: 2009/4/23 06:11:12

Test Laboratory: Bureau Veritas ADT

M01-11a-Ch140

DUT: Wireless-N USB Network Adapter with Dual-Band ; Type: WUSB600N ver.2

Communication System: 802.11a ; Frequency: 5700 MHz ; Duty Cycle: 1:1 ; Modulation type: BPSK
Medium: MSL5800 Medium parameters used: f = 5700 MHz; σ = 5.89 mho/m; εr = 49.9; ρ = 1000 kg/m^3
Phantom section: Flat Section ; Separation distance : 5 mm (The bottom side of the EUT to the Phantom)

DASY4 Configuration:
- Probe: EX3DV3 - SN3504 ; ConvF(3.91, 3.91, 3.91) ; Calibrated: 2009/1/21
- Sensor-Surface: 3mm (Mechanical Surface Detection)
- Electronics: DAE3 Sn510 ; Calibrated: 2009/1/21
- Phantom: SAM 12 ; Type: SAM V4.0 ; Serial: TP 1202
- Measurement SW: DASY4, V4.7 Build 80 ; Postprocessing SW: SEMCAD, V1.8 Build 186

High Channel 140/Area Scan (6x10x1): Measurement grid: dx=10mm, dy=10mm
Maximum value of SAR (measured) = 0.471 mW/g

High Channel 140/Zoom Scan (8x8x8)/Cube 0: Measurement grid: dx=4.3mm, dy=4.3mm, dz=3mm
Reference Value = 6.31 V/m
Peak SAR (extrapolated) = 1.85 W/kg
SAR(1 g) = 0.402 mW/g; SAR(10 g) = 0.179 mW/g
Maximum value of SAR (measured) = 0.562 mW/g

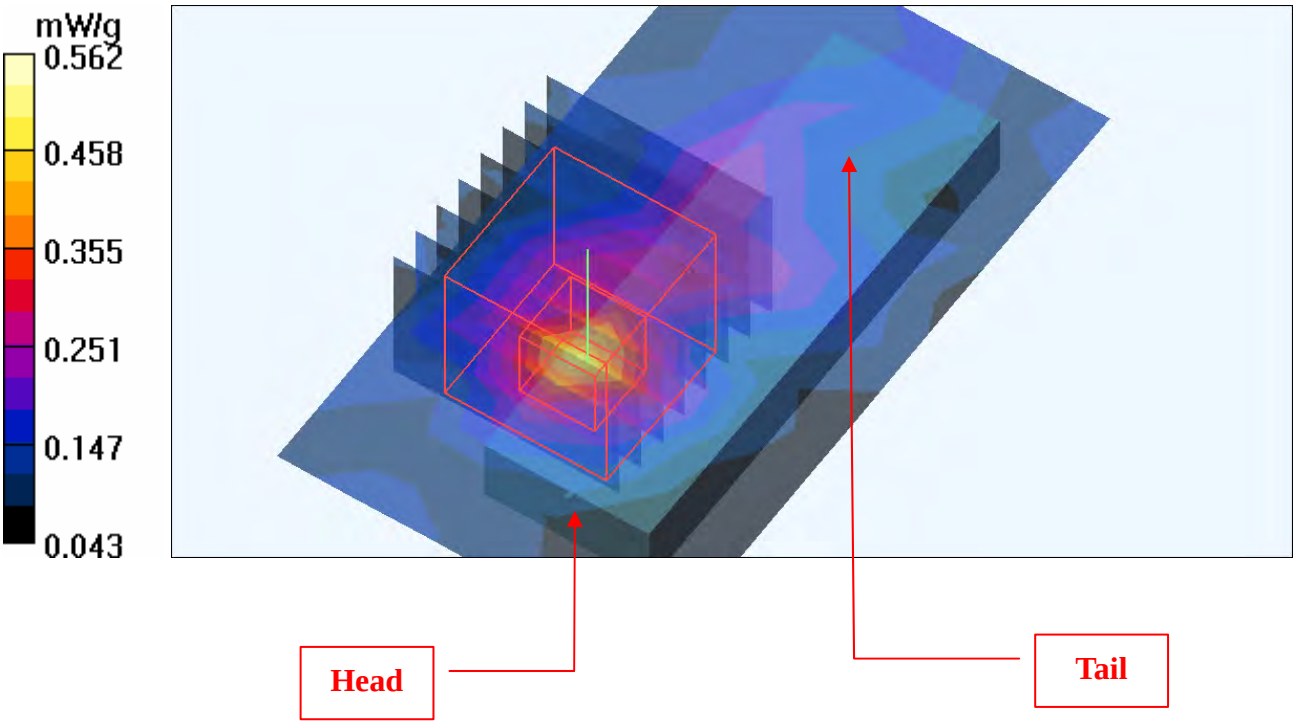

Date/Time: 2009/4/23 07:12:42

Test Laboratory: Bureau Veritas ADT

M02-11aN 20M-Ch36

DUT: Wireless-N USB Network Adapter with Dual-Band ; Type: WUSB600N ver.2

Communication System: 11n 5G span20 ; Frequency: 5180 MHz ; Duty Cycle: 1:1 ; Modulation type: BPSK
Medium: MSL5800 Medium parameters used: f = 5180 MHz; σ = 5.14 mho/m; εr = 51; ρ = 1000 kg/m^3
Phantom section: Flat Section ; Separation distance : 5 mm (The bottom side of the EUT to the Phantom)

DASY4 Configuration:
- Probe: EX3DV3 - SN3504 ; ConvF(4.38, 4.38, 4.38) ; Calibrated: 2009/1/21
- Sensor-Surface: 3mm (Mechanical Surface Detection)
- Electronics: DAE3 Sn510 ; Calibrated: 2009/1/21
- Phantom: SAM 12 ; Type: SAM V4.0 ; Serial: TP 1202
- Measurement SW: DASY4, V4.7 Build 80 ; Postprocessing SW: SEMCAD, V1.8 Build 186

Low Channel 36/Area Scan (6x10x1): Measurement grid: dx=10mm, dy=10mm
Maximum value of SAR (measured) = 1.03 mW/g

Low Channel 36/Zoom Scan (8x8x8)/Cube 0: Measurement grid: dx=4.3mm, dy=4.3mm, dz=3mm
Reference Value = 11.4 V/m
Peak SAR (extrapolated) = 2.53 W/kg
SAR(1 g) = 0.735 mW/g; SAR(10 g) = 0.270 mW/g
Maximum value of SAR (measured) = 1.04 mW/g

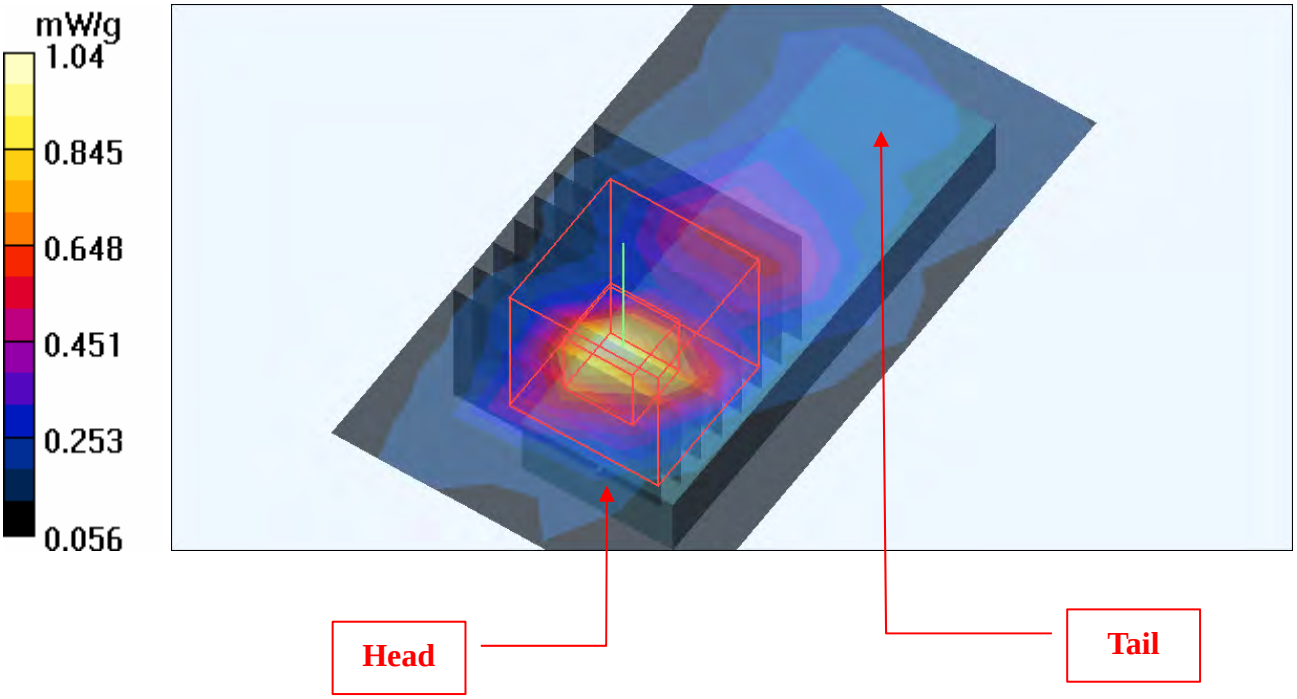

Date/Time: 2009/4/23 07:37:28

Test Laboratory: Bureau Veritas ADT

M02-11aN 20M-Ch40

DUT: Wireless-N USB Network Adapter with Dual-Band ; Type: WUSB600N ver.2

Communication System: 11n 5G span20 ; Frequency: 5200 MHz ; Duty Cycle: 1:1 ; Modulation type: BPSK
Medium: MSL5800 Medium parameters used: f = 5200 MHz; σ = 5.16 mho/m; εr = 50.9; ρ = 1000 kg/m^3
Phantom section: Flat Section ; Separation distance : 5 mm (The bottom side of the EUT to the Phantom)

DASY4 Configuration:
- Probe: EX3DV3 - SN3504 ; ConvF(4.38, 4.38, 4.38) ; Calibrated: 2009/1/21
- Sensor-Surface: 3mm (Mechanical Surface Detection)
- Electronics: DAE3 Sn510 ; Calibrated: 2009/1/21
- Phantom: SAM 12 ; Type: SAM V4.0 ; Serial: TP 1202
- Measurement SW: DASY4, V4.7 Build 80 ; Postprocessing SW: SEMCAD, V1.8 Build 186

Mid Channel 40/Area Scan (6x10x1): Measurement grid: dx=10mm, dy=10mm
Maximum value of SAR (measured) = 1.10 mW/g

Mid Channel 40/Zoom Scan (8x8x8)/Cube 0: Measurement grid: dx=4.3mm, dy=4.3mm, dz=3mm
Reference Value = 12.1 V/m
Peak SAR (extrapolated) = 2.76 W/kg
SAR(1 g) = 0.812 mW/g; SAR(10 g) = 0.275 mW/g
Maximum value of SAR (measured) = 1.22 mW/g

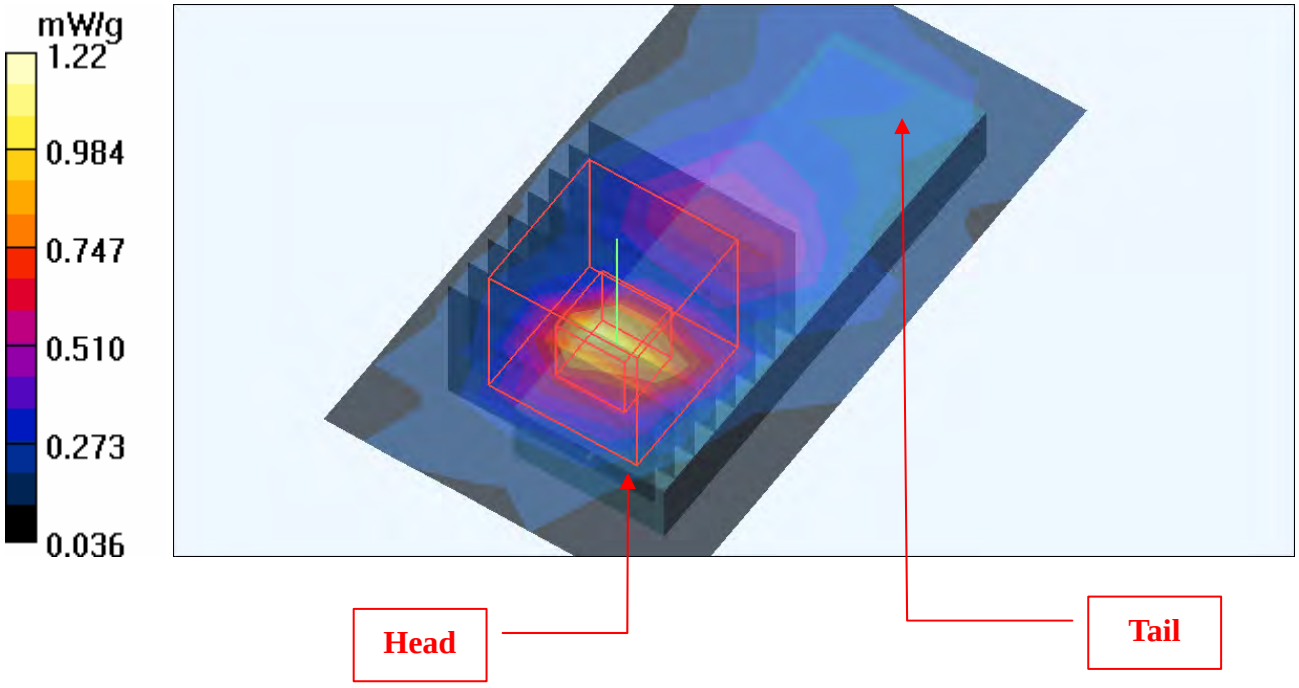

Date/Time: 2009/4/23 08:00:41

Test Laboratory: Bureau Veritas ADT

M02-11aN 20M-Ch48

DUT: Wireless-N USB Network Adapter with Dual-Band ; Type: WUSB600N ver.2

Communication System: 11n 5G span20 ; Frequency: 5240 MHz ; Duty Cycle: 1:1 ; Modulation type: BPSK
Medium: MSL5800 Medium parameters used: f = 5240 MHz; σ = 5.22 mho/m; εr = 50.8; ρ = 1000 kg/m^3
Phantom section: Flat Section ; Separation distance : 5 mm (The bottom side of the EUT to the Phantom)

DASY4 Configuration:
- Probe: EX3DV3 - SN3504 ; ConvF(4.38, 4.38, 4.38) ; Calibrated: 2009/1/21
- Sensor-Surface: 3mm (Mechanical Surface Detection)
- Electronics: DAE3 Sn510 ; Calibrated: 2009/1/21
- Phantom: SAM 12 ; Type: SAM V4.0 ; Serial: TP 1202
- Measurement SW: DASY4, V4.7 Build 80 ; Postprocessing SW: SEMCAD, V1.8 Build 186

High Channel 48/Area Scan (6x10x1): Measurement grid: dx=10mm, dy=10mm
Maximum value of SAR (measured) = 1.12 mW/g

High Channel 48/Zoom Scan (8x8x8)/Cube 0: Measurement grid: dx=4.3mm, dy=4.3mm, dz=3mm
Reference Value = 12.1 V/m
Peak SAR (extrapolated) = 3.01 W/kg
SAR(1 g) = 0.887 mW/g; SAR(10 g) = 0.311 mW/g
Maximum value of SAR (measured) = 1.28 mW/g

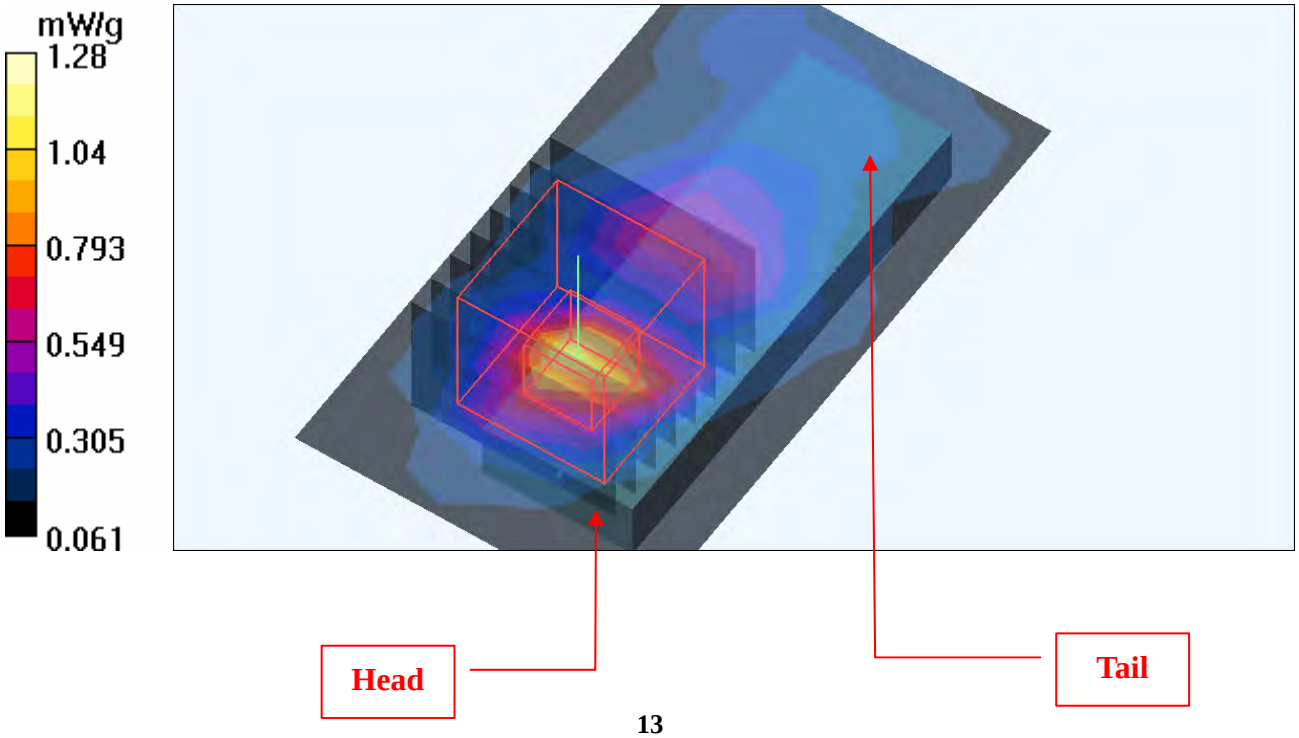

Date/Time: 2009/4/23 08:53:43

Test Laboratory: Bureau Veritas ADT

M02-11aN 20M-Ch52

DUT: Wireless-N USB Network Adapter with Dual-Band ; Type: WUSB600N ver.2

Communication System: 11n 5G span20 ; Frequency: 5260 MHz ; Duty Cycle: 1:1 ; Modulation type: BPSK
Medium: MSL5800 Medium parameters used: f = 5260 MHz; σ = 5.26 mho/m; εr = 50.8; ρ = 1000 kg/m^3
Phantom section: Flat Section ; Separation distance : 5 mm (The bottom side of the EUT to the Phantom)

DASY4 Configuration:
- Probe: EX3DV3 - SN3504 ; ConvF(4.06, 4.06, 4.06) ; Calibrated: 2009/1/21
- Sensor-Surface: 3mm (Mechanical Surface Detection)
- Electronics: DAE3 Sn510 ; Calibrated: 2009/1/21
- Phantom: SAM 12 ; Type: SAM V4.0 ; Serial: TP 1202
- Measurement SW: DASY4, V4.7 Build 80 ; Postprocessing SW: SEMCAD, V1.8 Build 186

Low Channel 52/Area Scan (6x10x1): Measurement grid: dx=10mm, dy=10mm
Maximum value of SAR (measured) = 1.33 mW/g

Low Channel 52/Zoom Scan (8x8x8)/Cube 0: Measurement grid: dx=4.3mm, dy=4.3mm, dz=3mm
Reference Value = 12.4 V/m
Peak SAR (extrapolated) = 3.76 W/kg
SAR(1 g) = 1.05 mW/g; SAR(10 g) = 0.364 mW/g
Maximum value of SAR (measured) = 1.49 mW/g

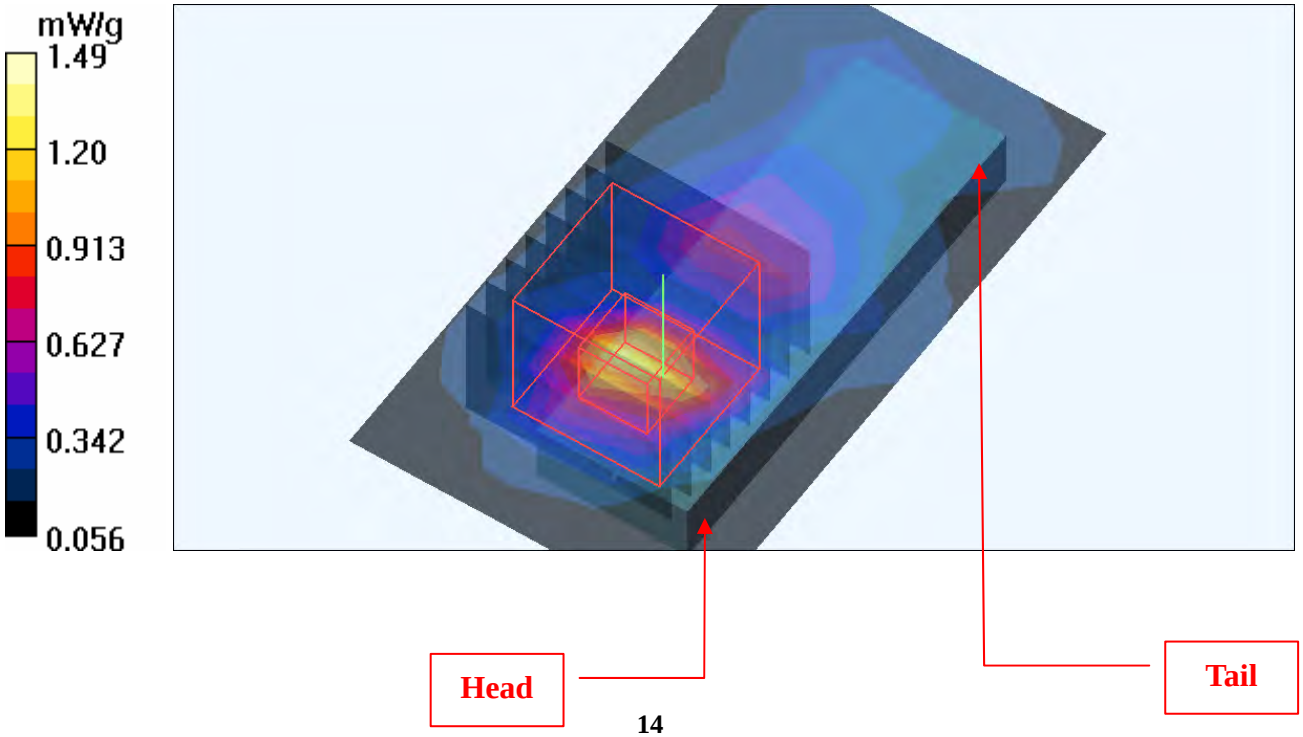

Date/Time: 2009/4/23 09:16:51

Test Laboratory: Bureau Veritas ADT

M02-11aN 20M-Ch60

DUT: Wireless-N USB Network Adapter with Dual-Band ; Type: WUSB600N ver.2

Communication System: 11n 5G span20 ; Frequency: 5300 MHz ; Duty Cycle: 1:1 ; Modulation type: BPSK
Medium: MSL5800 Medium parameters used: f = 5300 MHz; σ = 5.31 mho/m; εr = 50.7; ρ = 1000 kg/m^3
Phantom section: Flat Section ; Separation distance : 5 mm (The bottom side of the EUT to the Phantom)

DASY4 Configuration:
- Probe: EX3DV3 - SN3504 ; ConvF(4.06, 4.06, 4.06) ; Calibrated: 2009/1/21
- Sensor-Surface: 3mm (Mechanical Surface Detection)
- Electronics: DAE3 Sn510 ; Calibrated: 2009/1/21
- Phantom: SAM 12 ; Type: SAM V4.0 ; Serial: TP 1202
- Measurement SW: DASY4, V4.7 Build 80 ; Postprocessing SW: SEMCAD, V1.8 Build 186

Mid Channel 60/Area Scan (6x10x1): Measurement grid: dx=10mm, dy=10mm
Maximum value of SAR (measured) = 1.49 mW/g

Mid Channel 60/Zoom Scan (8x8x8)/Cube 0: Measurement grid: dx=4.3mm, dy=4.3mm, dz=3mm
Reference Value = 13.9 V/m
Peak SAR (extrapolated) = 4.10 W/kg
SAR(1 g) = 1.13 mW/g; SAR(10 g) = 0.386 mW/g
Maximum value of SAR (measured) = 1.62 mW/g

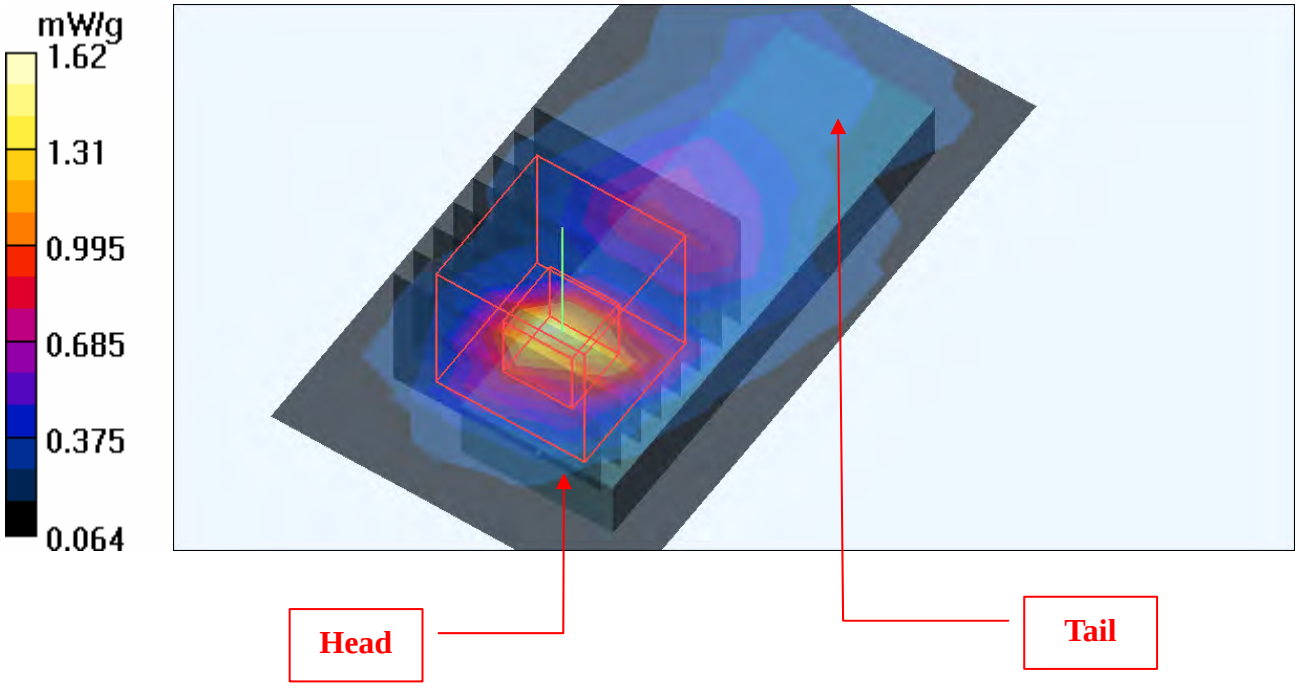

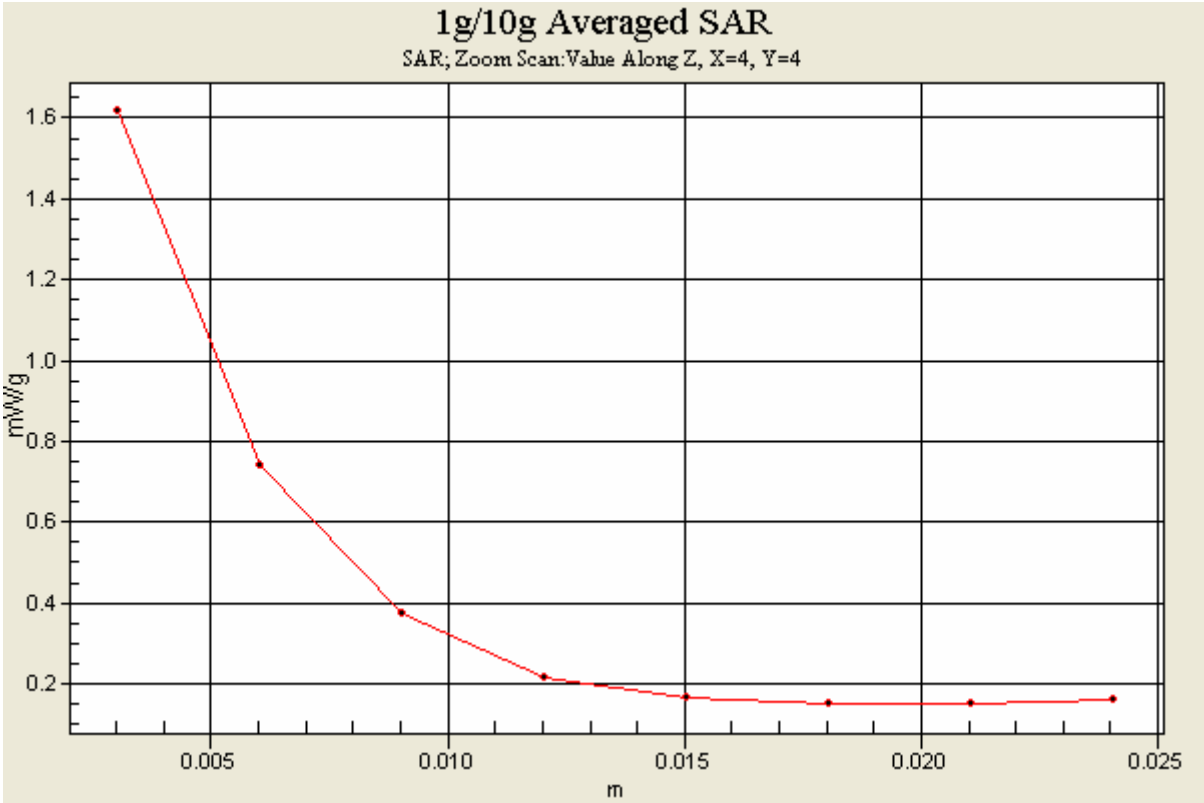
1g/10g Averaged SAR
SAR; Zoom Scan:Value Along Z, X=4, Y=4
mW/g
1.6
1.4
1.2
1.0
0.8
0.6
0.4
0.2
0.005
0.010
0.015
0.020
0.025
m

Date/Time: 2009/4/23 09:41:42

Test Laboratory: Bureau Veritas ADT

M02-11aN 20M-Ch64

DUT: Wireless-N USB Network Adapter with Dual-Band ; Type: WUSB600N ver.2

Communication System: 11n 5G span20 ; Frequency: 5320 MHz ; Duty Cycle: 1:1 ; Modulation type: BPSK
Medium: MSL5800 Medium parameters used: f = 5320 MHz; σ = 5.34 mho/m; εr = 50.7; ρ = 1000 kg/m^3
Phantom section: Flat Section ; Separation distance : 5 mm (The bottom side of the EUT to the Phantom)

DASY4 Configuration:
- Probe: EX3DV3 - SN3504 ; ConvF(4.06, 4.06, 4.06) ; Calibrated: 2009/1/21
- Sensor-Surface: 3mm (Mechanical Surface Detection)
- Electronics: DAE3 Sn510 ; Calibrated: 2009/1/21
- Phantom: SAM 12 ; Type: SAM V4.0 ; Serial: TP 1202
- Measurement SW: DASY4, V4.7 Build 80 ; Postprocessing SW: SEMCAD, V1.8 Build 186

High Channel 64/Area Scan (6x10x1): Measurement grid: dx=10mm, dy=10mm
Maximum value of SAR (measured) = 1.28 mW/g

High Channel 64/Zoom Scan (8x8x8)/Cube 0: Measurement grid: dx=4.3mm, dy=4.3mm, dz=3mm
Reference Value = 11.9 V/m
Peak SAR (extrapolated) = 3.57 W/kg
SAR(1 g) = 0.987 mW/g; SAR(10 g) = 0.348 mW/g
Maximum value of SAR (measured) = 1.39 mW/g

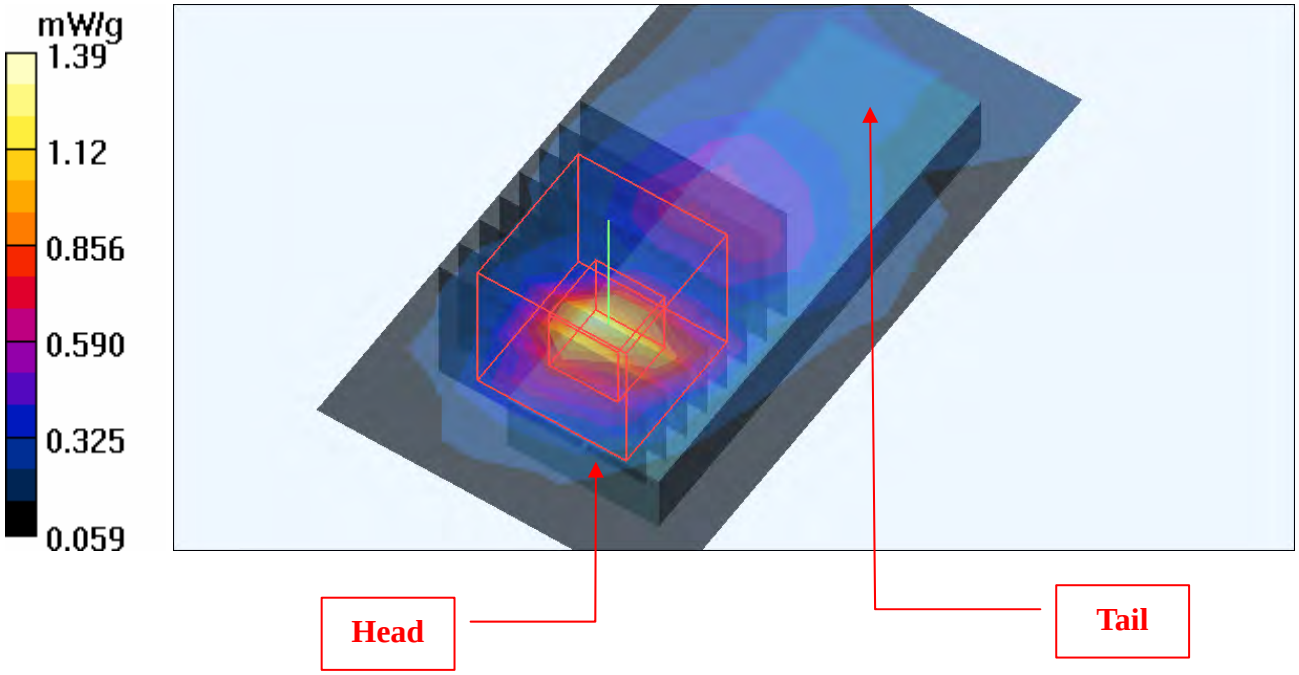

Date/Time: 2009/4/23 10:04:04

Test Laboratory: Bureau Veritas ADT

M02-11aN 20M-Ch100

DUT: Wireless-N USB Network Adapter with Dual-Band ; Type: WUSB600N ver.2

Communication System: 11n 5G span20 ; Frequency: 5500 MHz ; Duty Cycle: 1:1 ; Modulation type: BPSK
Medium: MSL5800 Medium parameters used: f = 5500 MHz; σ = 5.6 mho/m; εr = 50.3; ρ = 1000 kg/m^3
Phantom section: Flat Section ; Separation distance : 5 mm (The bottom side of the EUT to the Phantom)

DASY4 Configuration:
- Probe: EX3DV3 - SN3504 ; ConvF(3.98, 3.98, 3.98) ; Calibrated: 2009/1/21
- Sensor-Surface: 3mm (Mechanical Surface Detection)
- Electronics: DAE3 Sn510 ; Calibrated: 2009/1/21
- Phantom: SAM 12 ; Type: SAM V4.0 ; Serial: TP 1202
- Measurement SW: DASY4, V4.7 Build 80 ; Postprocessing SW: SEMCAD, V1.8 Build 186

Low Channel 100/Area Scan (6x10x1): Measurement grid: dx=10mm, dy=10mm
Maximum value of SAR (measured) = 1.58 mW/g

Low Channel 100/Zoom Scan (8x8x8)/Cube 0: Measurement grid: dx=4.3mm, dy=4.3mm, dz=3mm
Reference Value = 12.7 V/m
Peak SAR (extrapolated) = 4.10 W/kg
SAR(1 g) = 1.11 mW/g; SAR(10 g) = 0.370 mW/g
Maximum value of SAR (measured) = 1.61 mW/g

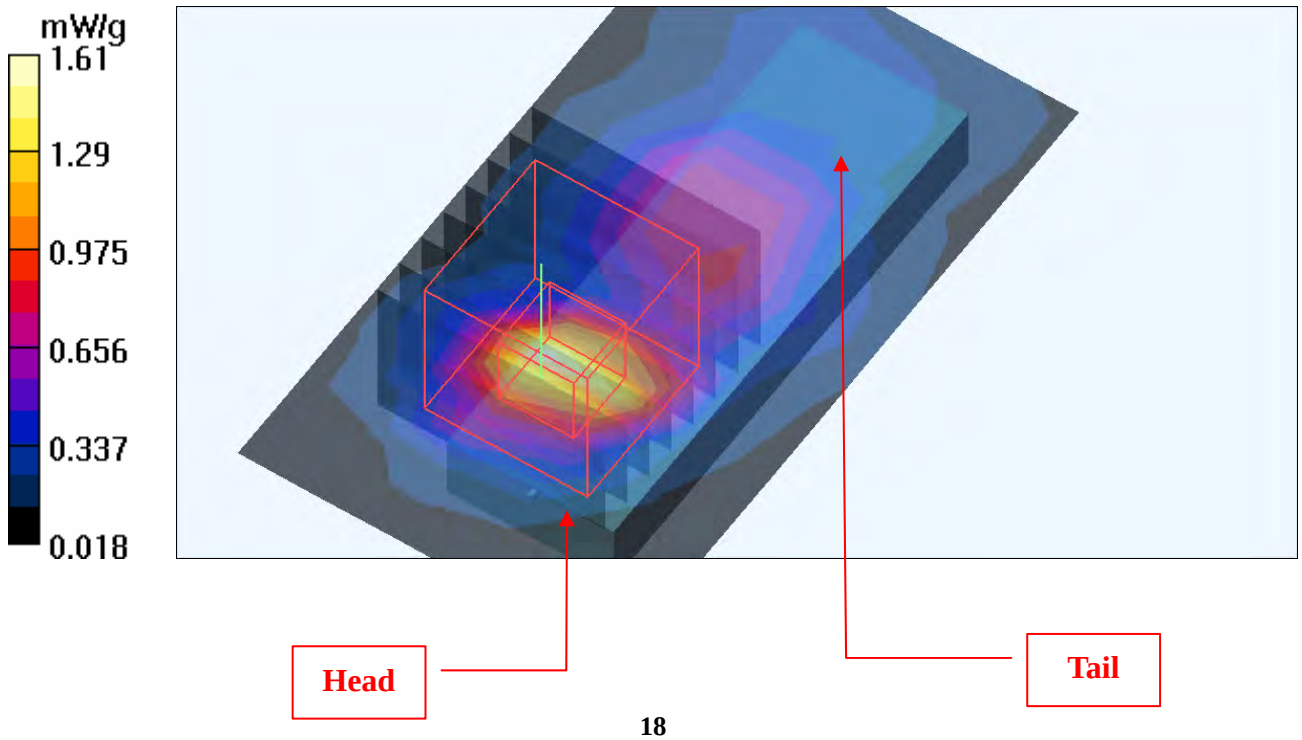

Date/Time: 2009/4/23 10:32:23

Test Laboratory: Bureau Veritas ADT

M02-11aN 20M-Ch104

DUT: Wireless-N USB Network Adapter with Dual-Band ; Type: WUSB600N ver.2

Communication System: 11n 5G span20 ; Frequency: 5520 MHz ; Duty Cycle: 1:1 ; Modulation type: BPSK
Medium: MSL5800 Medium parameters used: f = 5520 MHz; σ = 5.63 mho/m; εr = 50.2; ρ = 1000 kg/m^3
Phantom section: Flat Section ; Separation distance : 5 mm (The bottom side of the EUT to the Phantom)

DASY4 Configuration:
- Probe: EX3DV3 - SN3504 ; ConvF(3.98, 3.98, 3.98) ; Calibrated: 2009/1/21
- Sensor-Surface: 3mm (Mechanical Surface Detection)
- Electronics: DAE3 Sn510 ; Calibrated: 2009/1/21
- Phantom: SAM 12 ; Type: SAM V4.0 ; Serial: TP 1202
- Measurement SW: DASY4, V4.7 Build 80 ; Postprocessing SW: SEMCAD, V1.8 Build 186

Mid Channel 104/Area Scan (6x10x1): Measurement grid: dx=10mm, dy=10mm
Maximum value of SAR (measured) = 1.43 mW/g

Mid Channel 104/Zoom Scan (8x8x8)/Cube 0: Measurement grid: dx=4.3mm, dy=4.3mm, dz=3mm
Reference Value = 11.7 V/m
Peak SAR (extrapolated) = 4.11 W/kg
SAR(1 g) = 1.07 mW/g; SAR(10 g) = 0.347 mW/g
Maximum value of SAR (measured) = 1.52 mW/g

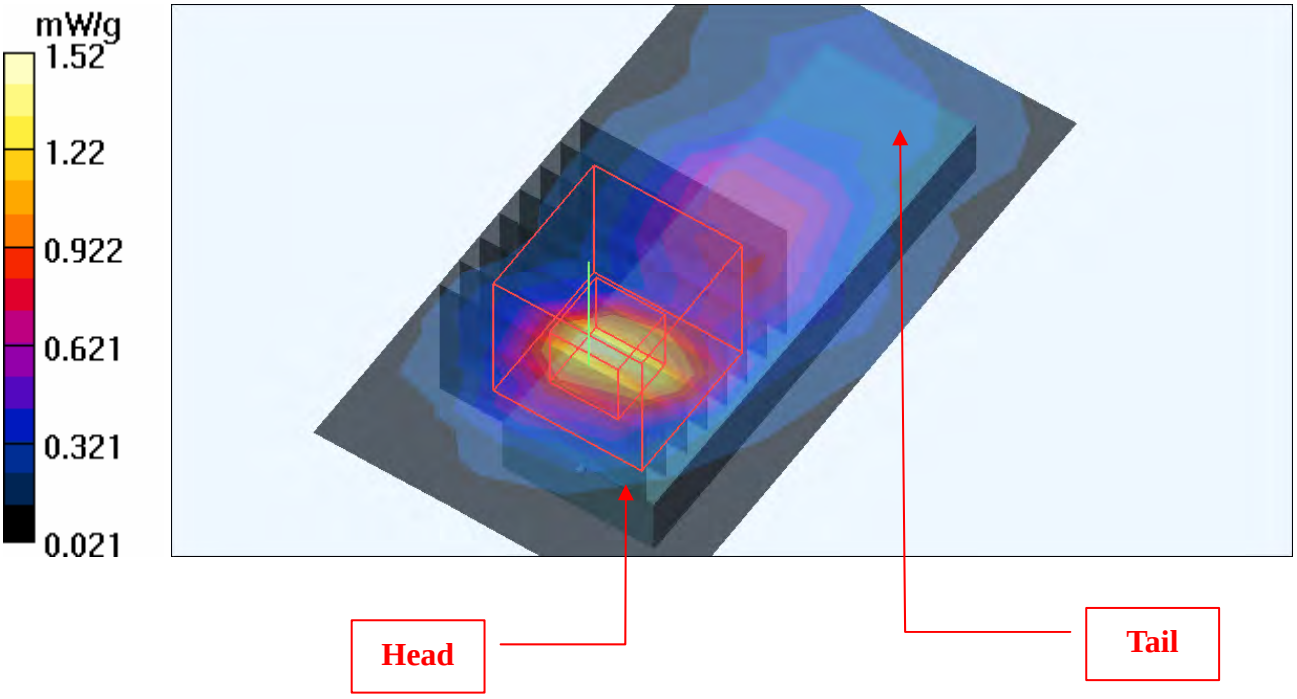

Date/Time: 2009/4/23 10:59:19

Test Laboratory: Bureau Veritas ADT

M02-11aN 20M-Ch116

DUT: Wireless-N USB Network Adapter with Dual-Band ; Type: WUSB600N ver.2

Communication System: 11n 5G span20 ; Frequency: 5580 MHz ; Duty Cycle: 1:1 ; Modulation type: BPSK
Medium: MSL5800 Medium parameters used: f = 5580 MHz; σ = 5.71 mho/m; εr = 50.1; ρ = 1000 kg/m^3
Phantom section: Flat Section ; Separation distance : 5 mm (The bottom side of the EUT to the Phantom)

DASY4 Configuration:
- Probe: EX3DV3 - SN3504 ; ConvF(3.91, 3.91, 3.91) ; Calibrated: 2009/1/21
- Sensor-Surface: 3mm (Mechanical Surface Detection)
- Electronics: DAE3 Sn510 ; Calibrated: 2009/1/21
- Phantom: SAM 12 ; Type: SAM V4.0 ; Serial: TP 1202
- Measurement SW: DASY4, V4.7 Build 80 ; Postprocessing SW: SEMCAD, V1.8 Build 186

Mid Channel 116/Area Scan (6x10x1): Measurement grid: dx=10mm, dy=10mm
Maximum value of SAR (measured) = 1.15 mW/g

Mid Channel 116/Zoom Scan (8x8x8)/Cube 0: Measurement grid: dx=4.3mm, dy=4.3mm, dz=3mm
Reference Value = 10.3 V/m
Peak SAR (extrapolated) = 3.48 W/kg
SAR(1 g) = 0.871 mW/g; SAR(10 g) = 0.293 mW/g
Maximum value of SAR (measured) = 1.20 mW/g

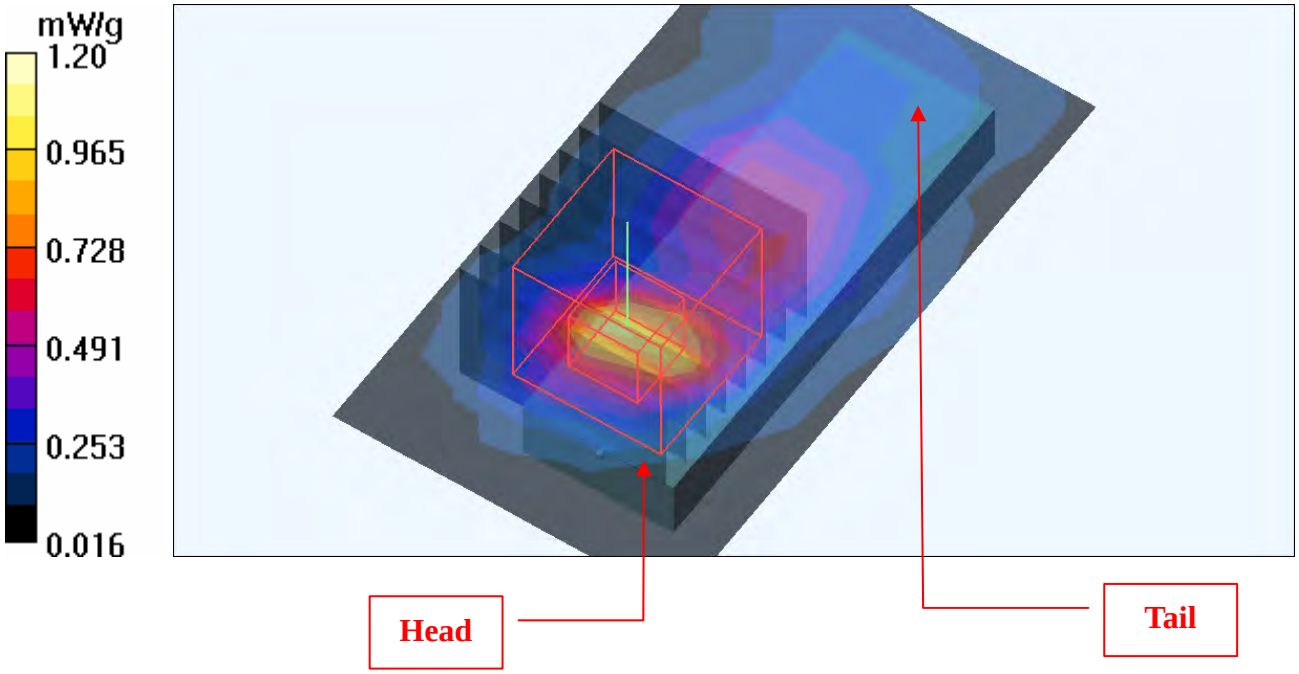

Date/Time: 2009/4/23 11:33:16

Test Laboratory: Bureau Veritas ADT

M02-11aN 20M-Ch120

DUT: Wireless-N USB Network Adapter with Dual-Band ; Type: WUSB600N ver.2

Communication System: 11n 5G span20 ; Frequency: 5600 MHz ; Duty Cycle: 1:1 ; Modulation type: BPSK
Medium: MSL5800 Medium parameters used: f = 5600 MHz; σ = 5.74 mho/m; εr = 50.1; ρ = 1000 kg/m^3
Phantom section: Flat Section ; Separation distance : 5 mm (The bottom side of the EUT to the Phantom)

DASY4 Configuration:
- Probe: EX3DV3 - SN3504 ; ConvF(3.91, 3.91, 3.91) ; Calibrated: 2009/1/21
- Sensor-Surface: 3mm (Mechanical Surface Detection)
- Electronics: DAE3 Sn510 ; Calibrated: 2009/1/21
- Phantom: SAM 12 ; Type: SAM V4.0 ; Serial: TP 1202
- Measurement SW: DASY4, V4.7 Build 80 ; Postprocessing SW: SEMCAD, V1.8 Build 186

Mid Channel 120/Area Scan (6x10x1): Measurement grid: dx=10mm, dy=10mm
Maximum value of SAR (measured) = 1.06 mW/g

Mid Channel 120/Zoom Scan (8x8x8)/Cube 0: Measurement grid: dx=4.3mm, dy=4.3mm, dz=3mm
Reference Value = 9.52 V/m
Peak SAR (extrapolated) = 2.92 W/kg
SAR(1 g) = 0.785 mW/g; SAR(10 g) = 0.272 mW/g
Maximum value of SAR (measured) = 1.12 mW/g

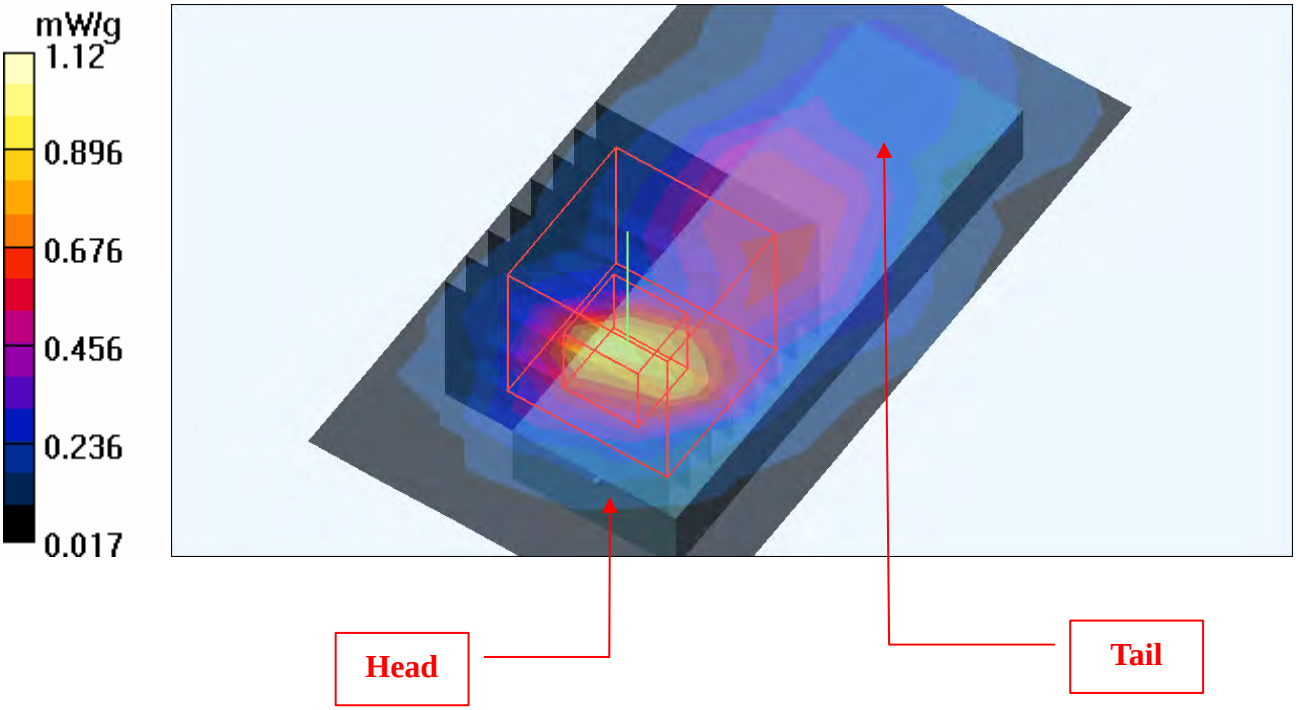

Date/Time: 2009/4/23 12:02:20

Test Laboratory: Bureau Veritas ADT

M02-11aN 20M-Ch124

DUT: Wireless-N USB Network Adapter with Dual-Band ; Type: WUSB600N ver.2

Communication System: 11n 5G span20 ; Frequency: 5620 MHz ; Duty Cycle: 1:1 ; Modulation type: BPSK
Medium: MSL5800 Medium parameters used: f = 5620 MHz; σ = 5.78 mho/m; εr = 50; ρ = 1000 kg/m^3
Phantom section: Flat Section ; Separation distance : 5 mm (The bottom side of the EUT to the Phantom)

DASY4 Configuration:
- Probe: EX3DV3 - SN3504 ; ConvF(3.91, 3.91, 3.91) ; Calibrated: 2009/1/21
- Sensor-Surface: 3mm (Mechanical Surface Detection)
- Electronics: DAE3 Sn510 ; Calibrated: 2009/1/21
- Phantom: SAM 12 ; Type: SAM V4.0 ; Serial: TP 1202
- Measurement SW: DASY4, V4.7 Build 80 ; Postprocessing SW: SEMCAD, V1.8 Build 186

Mid Channel 124/Area Scan (6x10x1): Measurement grid: dx=10mm, dy=10mm
Maximum value of SAR (measured) = 1.06 mW/g

Mid Channel 124/Zoom Scan (8x8x8)/Cube 0: Measurement grid: dx=4.3mm, dy=4.3mm, dz=3mm
Reference Value = 9.79 V/m
Peak SAR (extrapolated) = 2.79 W/kg
SAR(1 g) = 0.740 mW/g; SAR(10 g) = 0.258 mW/g
Maximum value of SAR (measured) = 1.01 mW/g

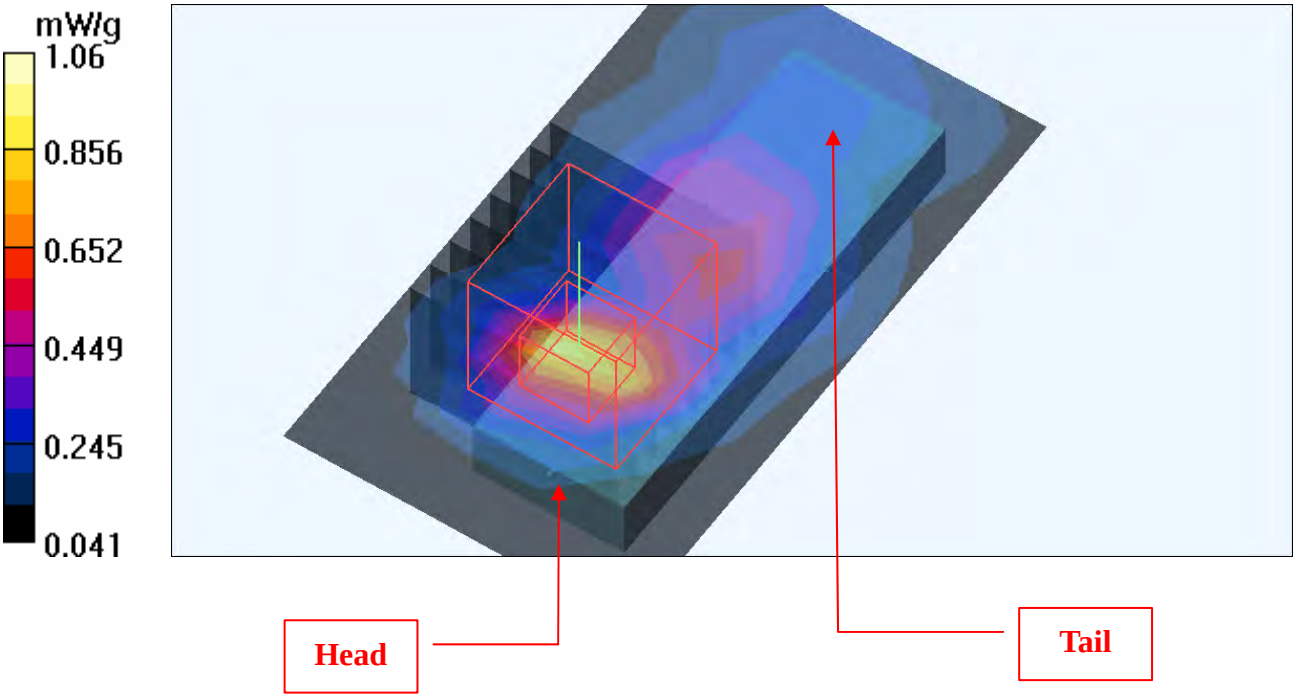

Date/Time: 2009/4/23 12:25:10

Test Laboratory: Bureau Veritas ADT

M02-11aN 20M-Ch136

DUT: Wireless-N USB Network Adapter with Dual-Band ; Type: WUSB600N ver.2

Communication System: 11n 5G span20 ; Frequency: 5680 MHz ; Duty Cycle: 1:1 ; Modulation type: BPSK
Medium: MSL5800 Medium parameters used: f = 5680 MHz; σ = 5.86 mho/m; εr = 49.9; ρ = 1000 kg/m^3
Phantom section: Flat Section ; Separation distance : 5 mm (The bottom side of the EUT to the Phantom)

DASY4 Configuration:
- Probe: EX3DV3 - SN3504 ; ConvF(3.91, 3.91, 3.91) ; Calibrated: 2009/1/21
- Sensor-Surface: 3mm (Mechanical Surface Detection)
- Electronics: DAE3 Sn510 ; Calibrated: 2009/1/21
- Phantom: SAM 12 ; Type: SAM V4.0 ; Serial: TP 1202
- Measurement SW: DASY4, V4.7 Build 80 ; Postprocessing SW: SEMCAD, V1.8 Build 186

Mid Channel 136/Area Scan (6x10x1): Measurement grid: dx=10mm, dy=10mm
Maximum value of SAR (measured) = 0.867 mW/g

Mid Channel 136/Zoom Scan (8x8x8)/Cube 0: Measurement grid: dx=4.3mm, dy=4.3mm, dz=3mm
Reference Value = 8.68 V/m
Peak SAR (extrapolated) = 2.68 W/kg
SAR(1 g) = 0.645 mW/g; SAR(10 g) = 0.225 mW/g
Maximum value of SAR (measured) = 0.859 mW/g

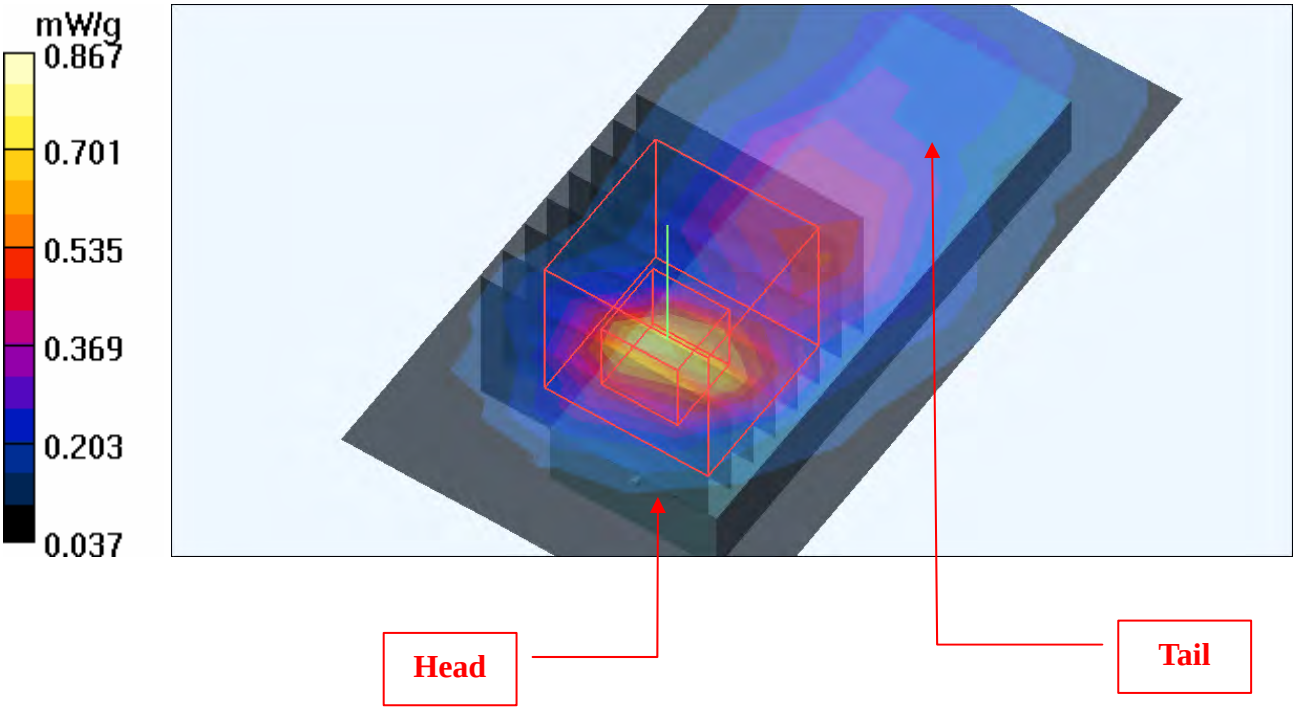

Date/Time: 2009/4/23 12:52:44

Test Laboratory: Bureau Veritas ADT

M02-11aN 20M-Ch140

DUT: Wireless-N USB Network Adapter with Dual-Band ; Type: WUSB600N ver.2

Communication System: 11n 5G span20 ; Frequency: 5700 MHz ; Duty Cycle: 1:1 ; Modulation type: BPSK
Medium: MSL5800 Medium parameters used: f = 5700 MHz; σ = 5.89 mho/m; εr = 49.9; ρ = 1000 kg/m^3
Phantom section: Flat Section ; Separation distance : 5 mm (The bottom side of the EUT to the Phantom)

DASY4 Configuration:
- Probe: EX3DV3 - SN3504 ; ConvF(3.91, 3.91, 3.91) ; Calibrated: 2009/1/21
- Sensor-Surface: 3mm (Mechanical Surface Detection)
- Electronics: DAE3 Sn510 ; Calibrated: 2009/1/21
- Phantom: SAM 12 ; Type: SAM V4.0 ; Serial: TP 1202
- Measurement SW: DASY4, V4.7 Build 80 ; Postprocessing SW: SEMCAD, V1.8 Build 186

High Channel 140/Area Scan (6x10x1): Measurement grid: dx=10mm, dy=10mm
Maximum value of SAR (measured) = 0.737 mW/g

High Channel 140/Zoom Scan (8x8x8)/Cube 0: Measurement grid: dx=4.3mm, dy=4.3mm, dz=3mm
Reference Value = 8.00 V/m
Peak SAR (extrapolated) = 2.21 W/kg
SAR(1 g) = 0.551 mW/g; SAR(10 g) = 0.194 mW/g
Maximum value of SAR (measured) = 0.750 mW/g

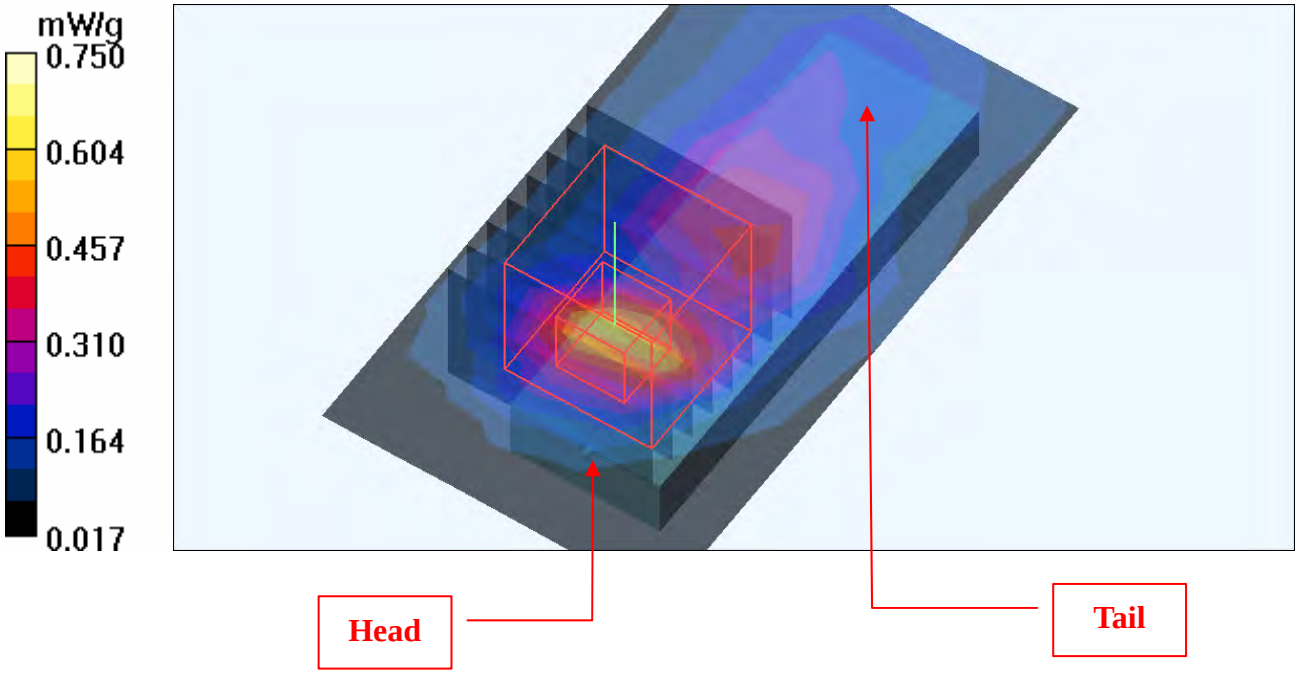

Date/Time: 2009/4/23 13:58:55

Test Laboratory: Bureau Veritas ADT

M03-11aN 40M-Ch46

DUT: Wireless-N USB Network Adapter with Dual-Band ; Type: WUSB600N ver.2

Communication System: 11n 5G span40 ; Frequency: 5230 MHz ; Duty Cycle: 1:1 ; Modulation type: BPSK
Medium: MSL5800 Medium parameters used: f = 5230 MHz; σ = 5.21 mho/m; ε_r = 50.8; ρ = 1000 kg/m^3
Phantom section: Flat Section ; Separation distance : 5 mm (The bottom side of the EUT to the Phantom)

DASY4 Configuration:
- Probe: EX3DV3 - SN3504 ; ConvF(4.38, 4.38, 4.38) ; Calibrated: 2009/1/21
- Sensor-Surface: 3mm (Mechanical Surface Detection)
- Electronics: DAE3 Sn510 ; Calibrated: 2009/1/21
- Phantom: SAM 12 ; Type: SAM V4.0 ; Serial: TP 1202
- Measurement SW: DASY4, V4.7 Build 80 ; Postprocessing SW: SEMCAD, V1.8 Build 186

High Channel 46/Area Scan (6x10x1): Measurement grid: dx=10mm, dy=10mm
Maximum value of SAR (measured) = 0.503 mW/g

High Channel 46/Zoom Scan (8x8x8)/Cube 0: Measurement grid: dx=4.3mm, dy=4.3mm, dz=3mm
Reference Value = 8.56 V/m
Peak SAR (extrapolated) = 1.43 W/kg
SAR(1 g) = 0.384 mW/g; SAR(10 g) = 0.132 mW/g
Maximum value of SAR (measured) = 0.560 mW/g

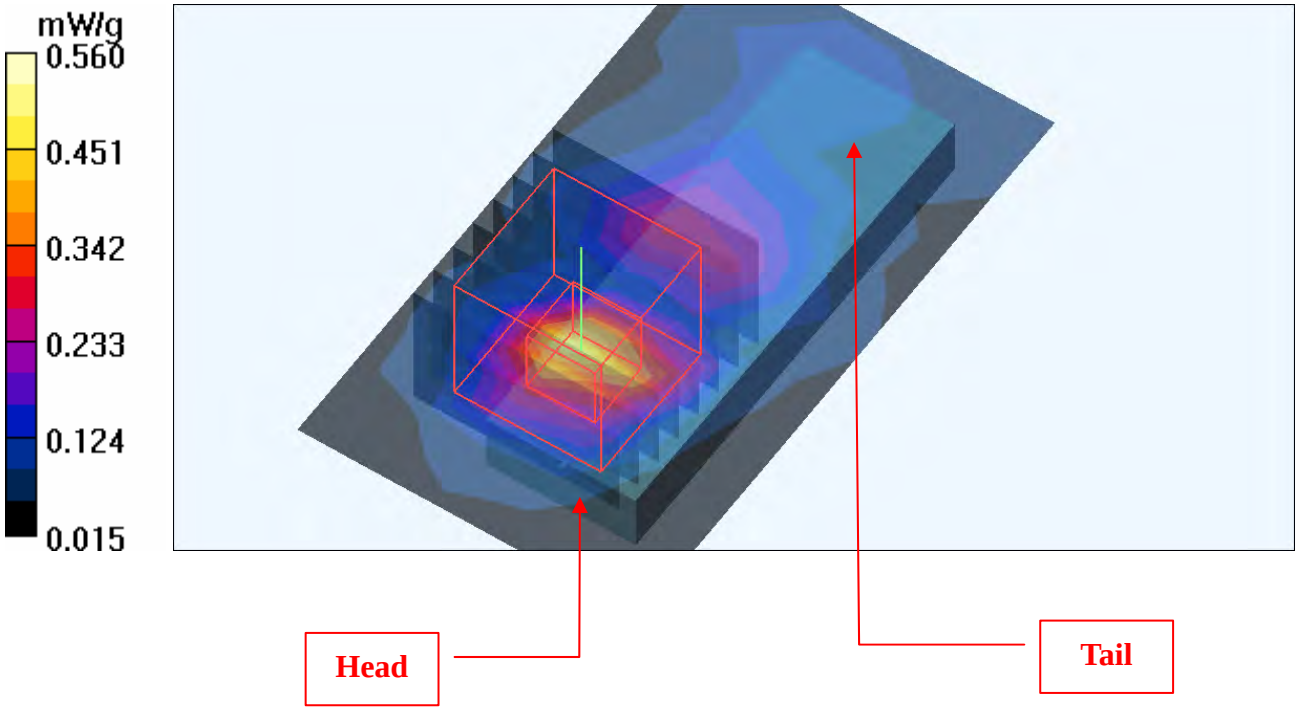

Date/Time: 2009/4/23 14:26:40

Test Laboratory: Bureau Veritas ADT

M03-11aN 40M-Ch54

DUT: Wireless-N USB Network Adapter with Dual-Band ; Type: WUSB600N ver.2

Communication System: 11n 5G span40 ; Frequency: 5270 MHz ; Duty Cycle: 1:1 ; Modulation type: BPSK
Medium: MSL5800 Medium parameters used: f = 5270 MHz; σ = 5.27 mho/m; ε_r = 50.8; ρ = 1000 kg/m^3
Phantom section: Flat Section ; Separation distance : 5 mm (The bottom side of the EUT to the Phantom)

DASY4 Configuration:
- Probe: EX3DV3 - SN3504 ; ConvF(4.06, 4.06, 4.06) ; Calibrated: 2009/1/21
- Sensor-Surface: 3mm (Mechanical Surface Detection)
- Electronics: DAE3 Sn510 ; Calibrated: 2009/1/21
- Phantom: SAM 12 ; Type: SAM V4.0 ; Serial: TP 1202
- Measurement SW: DASY4, V4.7 Build 80 ; Postprocessing SW: SEMCAD, V1.8 Build 186

Low Channel 54/Area Scan (6x10x1): Measurement grid: dx=10mm, dy=10mm
Maximum value of SAR (measured) = 0.584 mW/g

Low Channel 54/Zoom Scan (8x8x8)/Cube 0: Measurement grid: dx=4.3mm, dy=4.3mm, dz=3mm
Reference Value = 8.63 V/m
Peak SAR (extrapolated) = 1.66 W/kg
SAR(1 g) = 0.441 mW/g; SAR(10 g) = 0.175 mW/g
Maximum value of SAR (measured) = 0.595 mW/g

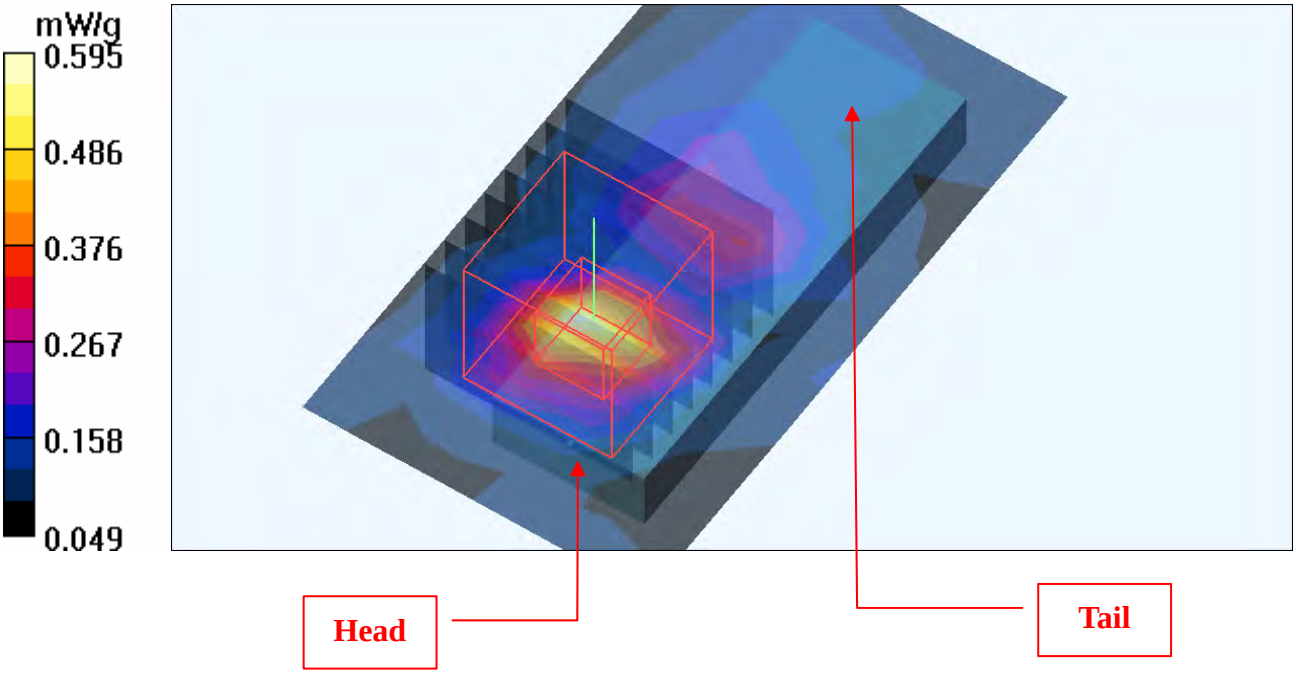

Date/Time: 2009/4/23 14:54:12

Test Laboratory: Bureau Veritas ADT

M03-11aN 40M-Ch102

DUT: Wireless-N USB Network Adapter with Dual-Band ; Type: WUSB600N ver.2

Communication System: 11n 5G span40 ; Frequency: 5510 MHz ; Duty Cycle: 1:1 ; Modulation type: BPSK
Medium: MSL5800 Medium parameters used: f = 5510 MHz; σ = 5.62 mho/m; ε_r = 50.3; ρ = 1000 kg/m^3
Phantom section: Flat Section ; Separation distance : 5 mm (The bottom side of the EUT to the Phantom)

DASY4 Configuration:
- Probe: EX3DV3 - SN3504 ; ConvF(3.98, 3.98, 3.98) ; Calibrated: 2009/1/21
- Sensor-Surface: 3mm (Mechanical Surface Detection)
- Electronics: DAE3 Sn510 ; Calibrated: 2009/1/21
- Phantom: SAM 12 ; Type: SAM V4.0 ; Serial: TP 1202
- Measurement SW: DASY4, V4.7 Build 80 ; Postprocessing SW: SEMCAD, V1.8 Build 186

Low Channel 102/Area Scan (6x10x1): Measurement grid: dx=10mm, dy=10mm
Maximum value of SAR (measured) = 1.11 mW/g

Low Channel 102/Zoom Scan (8x8x8)/Cube 0: Measurement grid: dx=4.3mm, dy=4.3mm, dz=3mm
Reference Value = 10.3 V/m
Peak SAR (extrapolated) = 2.72 W/kg
SAR(1 g) = 0.805 mW/g; SAR(10 g) = 0.306 mW/g
Maximum value of SAR (measured) = 1.12 mW/g

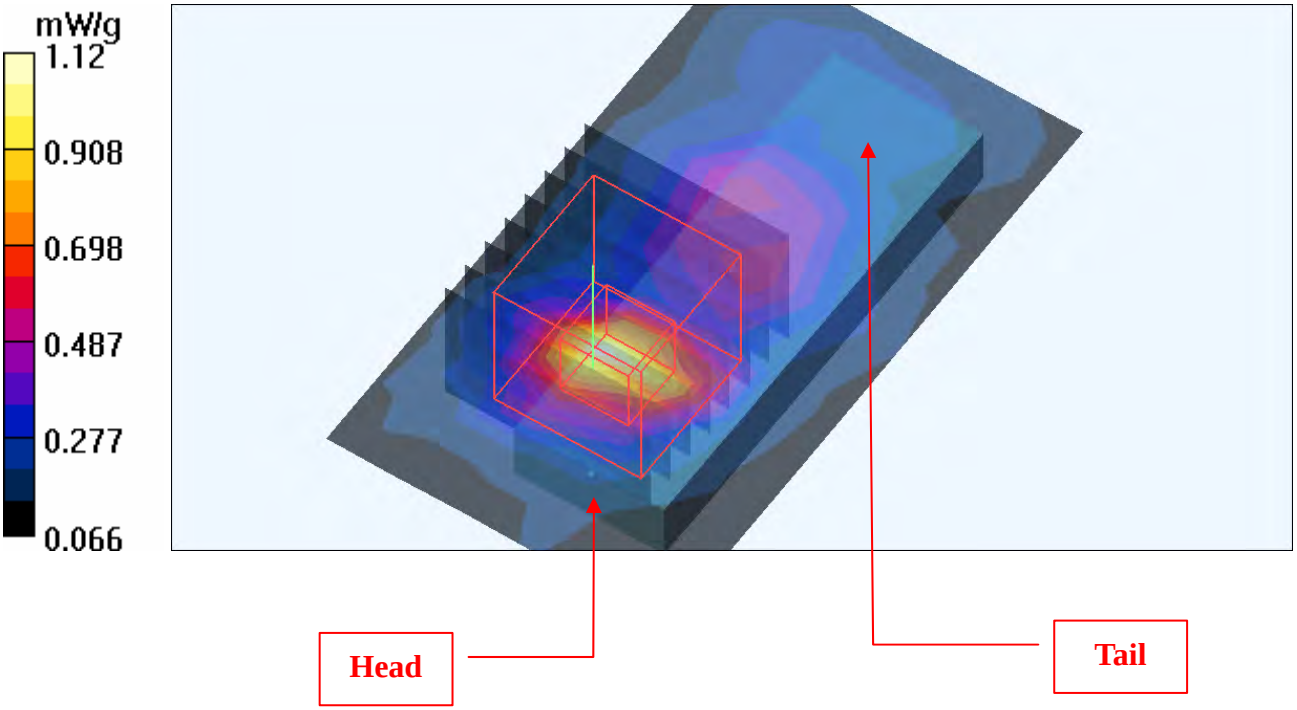

Date/Time: 2009/4/23 15:26:54

Test Laboratory: Bureau Veritas ADT

M03-11aN 40M-Ch118

DUT: Wireless-N USB Network Adapter with Dual-Band ; Type: WUSB600N ver.2

Communication System: 11n 5G span40 ; Frequency: 5590 MHz ; Duty Cycle: 1:1 ; Modulation type: BPSK
Medium: MSL5800 Medium parameters used: f = 5590 MHz; σ = 5.73 mho/m; ε_r = 50.1; ρ = 1000 kg/m^3
Phantom section: Flat Section ; Separation distance : 5 mm (The bottom side of the EUT to the Phantom)

DASY4 Configuration:
- Probe: EX3DV3 - SN3504 ; ConvF(3.91, 3.91, 3.91) ; Calibrated: 2009/1/21
- Sensor-Surface: 3mm (Mechanical Surface Detection)
- Electronics: DAE3 Sn510 ; Calibrated: 2009/1/21
- Phantom: SAM 12 ; Type: SAM V4.0 ; Serial: TP 1202
- Measurement SW: DASY4, V4.7 Build 80 ; Postprocessing SW: SEMCAD, V1.8 Build 186

Mid Channel 118/Area Scan (6x10x1): Measurement grid: dx=10mm, dy=10mm
Maximum value of SAR (measured) = 0.974 mW/g

Mid Channel 118/Zoom Scan (8x8x8)/Cube 0: Measurement grid: dx=4.3mm, dy=4.3mm, dz=3mm
Reference Value = 9.72 V/m
Peak SAR (extrapolated) = 2.75 W/kg
SAR(1 g) = 0.707 mW/g; SAR(10 g) = 0.281 mW/g
Maximum value of SAR (measured) = 0.956 mW/g

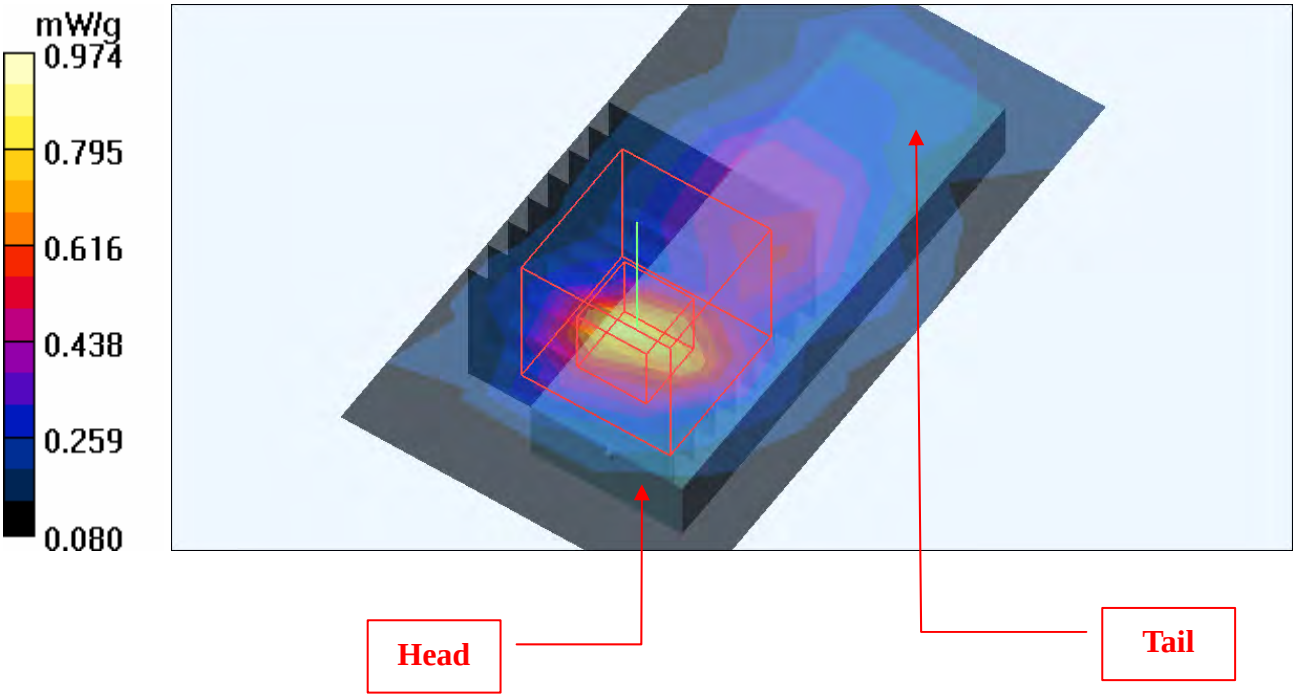

Date/Time: 2009/4/23 15:55:59

Test Laboratory: Bureau Veritas ADT

M03-11aN 40M-Ch134

DUT: Wireless-N USB Network Adapter with Dual-Band ; Type: WUSB600N ver.2

Communication System: 11n 5G span40 ; Frequency: 5670 MHz ; Duty Cycle: 1:1 ; Modulation type: BPSK
Medium: MSL5800 Medium parameters used: f = 5670 MHz; σ = 5.85 mho/m; ε_r = 50; ρ = 1000 kg/m^3
Phantom section: Flat Section ; Separation distance : 5 mm (The bottom side of the EUT to the Phantom)

DASY4 Configuration:
- Probe: EX3DV3 - SN3504 ; ConvF(3.91, 3.91, 3.91) ; Calibrated: 2009/1/21
- Sensor-Surface: 3mm (Mechanical Surface Detection)
- Electronics: DAE3 Sn510 ; Calibrated: 2009/1/21
- Phantom: SAM 12 ; Type: SAM V4.0 ; Serial: TP 1202
- Measurement SW: DASY4, V4.7 Build 80 ; Postprocessing SW: SEMCAD, V1.8 Build 186

High Channel 134/Area Scan (6x10x1): Measurement grid: dx=10mm, dy=10mm
Maximum value of SAR (measured) = 0.776 mW/g

High Channel 134/Zoom Scan (8x8x8)/Cube 0: Measurement grid: dx=4.3mm, dy=4.3mm, dz=3mm
Reference Value = 9.05 V/m
Peak SAR (extrapolated) = 2.12 W/kg
SAR(1 g) = 0.567 mW/g; SAR(10 g) = 0.236 mW/g
Maximum value of SAR (measured) = 0.729 mW/g

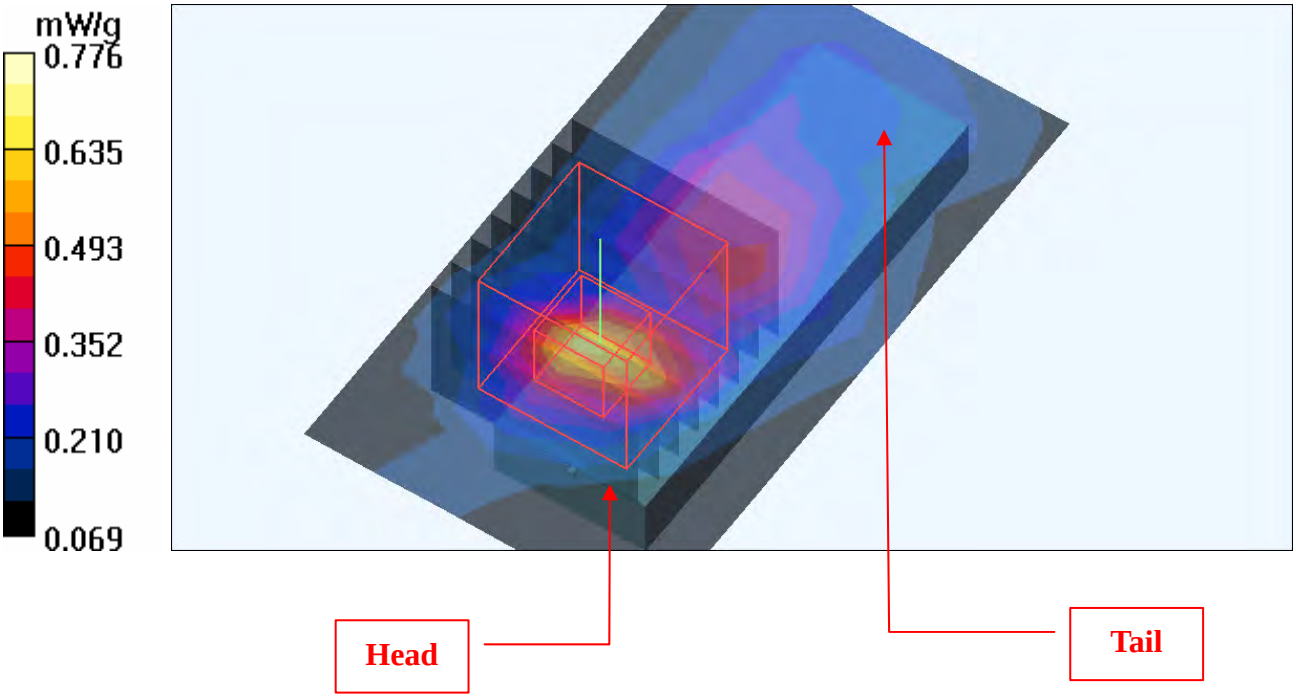

Date/Time: 2009/4/23 16:49:56

Test Laboratory: Bureau Veritas ADT

M04-11a-Ch40

DUT: Wireless-N USB Network Adapter with Dual-Band ; Type: WUSB600N ver.2

Communication System: 802.11a ; Frequency: 5200 MHz ; Duty Cycle: 1:1 ; Modulation type: BPSK
Medium: MSL5800 Medium parameters used: f = 5200 MHz; σ = 5.16 mho/m; εr = 50.9; ρ = 1000 kg/m^3
Phantom section: Flat Section ; Separation distance : 5 mm (The edge side of the EUT to the Phantom)

DASY4 Configuration:
- Probe: EX3DV3 - SN3504 ; ConvF(4.38, 4.38, 4.38) ; Calibrated: 2009/1/21
- Sensor-Surface: 3mm (Mechanical Surface Detection)
- Electronics: DAE3 Sn510 ; Calibrated: 2009/1/21
- Phantom: SAM 12 ; Type: SAM V4.0 ; Serial: TP 1202
- Measurement SW: DASY4, V4.7 Build 80 ; Postprocessing SW: SEMCAD, V1.8 Build 186

Mid Channel 40/Area Scan (6x10x1): Measurement grid: dx=10mm, dy=10mm
Maximum value of SAR (measured) = 0.207 mW/g

Mid Channel 40/Zoom Scan (8x8x8)/Cube 0: Measurement grid: dx=4.3mm, dy=4.3mm, dz=3mm
Reference Value = 4.25 V/m
Peak SAR (extrapolated) = 0.368 W/kg
SAR(1 g) = 0.127 mW/g; SAR(10 g) = 0.089 mW/g
Maximum value of SAR (measured) = 0.166 mW/g

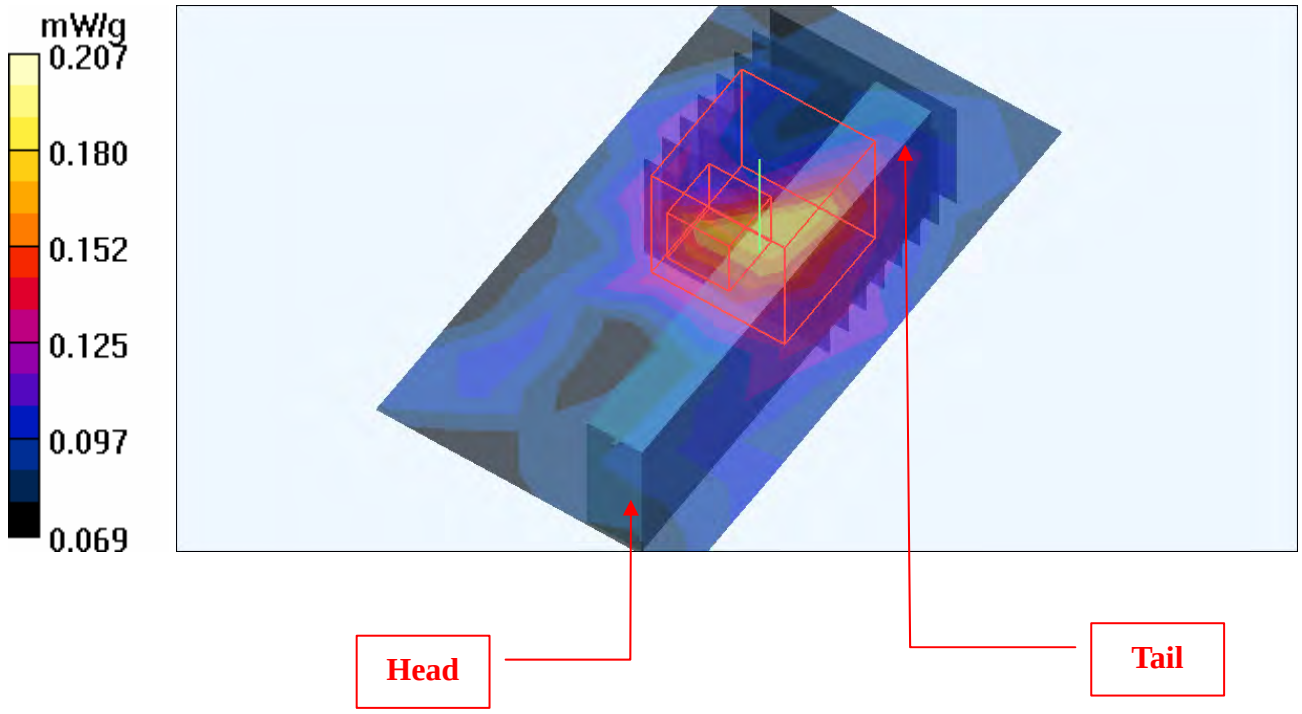

Date/Time: 2009/4/23 17:16:14

Test Laboratory: Bureau Veritas ADT

M04-11a-Ch64

DUT: Wireless-N USB Network Adapter with Dual-Band ; Type: WUSB600N ver.2

Communication System: 802.11a ; Frequency: 5320 MHz ; Duty Cycle: 1:1 ; Modulation type: BPSK
Medium: MSL5800 Medium parameters used: f = 5320 MHz; σ = 5.34 mho/m; εr = 50.7; ρ = 1000 kg/m^3
Phantom section: Flat Section ; Separation distance : 5 mm (The edge side of the EUT to the Phantom)

DASY4 Configuration:
- Probe: EX3DV3 - SN3504 ; ConvF(4.06, 4.06, 4.06) ; Calibrated: 2009/1/21
- Sensor-Surface: 3mm (Mechanical Surface Detection)
- Electronics: DAE3 Sn510 ; Calibrated: 2009/1/21
- Phantom: SAM 12 ; Type: SAM V4.0 ; Serial: TP 1202
- Measurement SW: DASY4, V4.7 Build 80 ; Postprocessing SW: SEMCAD, V1.8 Build 186

High Channel 64/Area Scan (6x10x1): Measurement grid: dx=10mm, dy=10mm
Maximum value of SAR (measured) = 0.175 mW/g

High Channel 64/Zoom Scan (8x8x8)/Cube 0: Measurement grid: dx=4.3mm, dy=4.3mm, dz=3mm
Reference Value = 5.49 V/m
Peak SAR (extrapolated) = 0.554 W/kg
SAR(1 g) = 0.137 mW/g; SAR(10 g) = 0.096 mW/g
Maximum value of SAR (measured) = 0.178 mW/g

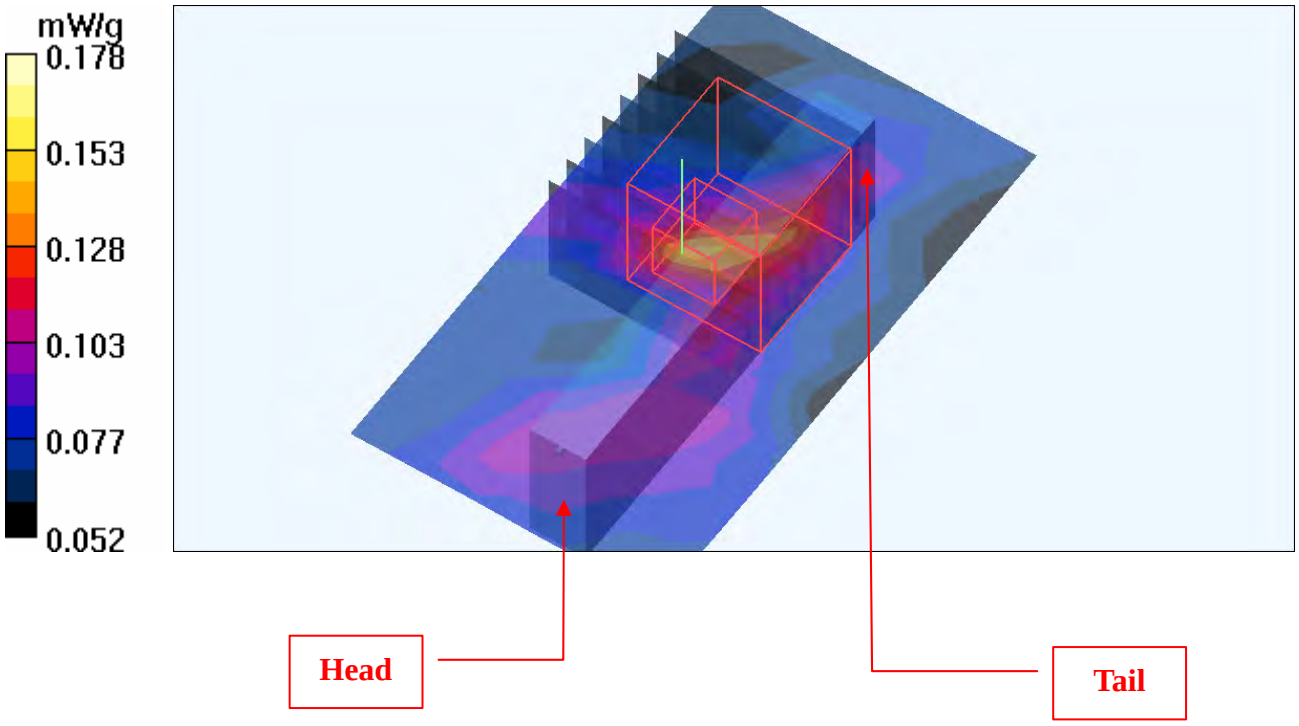

Date/Time: 2009/4/23 18:10:54

Test Laboratory: Bureau Veritas ADT

M04-11a-Ch140

DUT: Wireless-N USB Network Adapter with Dual-Band ; Type: WUSB600N ver.2

Communication System: 802.11a ; Frequency: 5700 MHz ; Duty Cycle: 1:1 ; Modulation type: BPSK
Medium: MSL5800 Medium parameters used: f = 5700 MHz; σ = 5.89 mho/m; εr = 49.9; ρ = 1000 kg/m^3
Phantom section: Flat Section ; Separation distance : 5 mm (The edge side of the EUT to the Phantom)

DASY4 Configuration:
- Probe: EX3DV3 - SN3504 ; ConvF(3.91, 3.91, 3.91) ; Calibrated: 2009/1/21
- Sensor-Surface: 3mm (Mechanical Surface Detection)
- Electronics: DAE3 Sn510 ; Calibrated: 2009/1/21
- Phantom: SAM 12 ; Type: SAM V4.0 ; Serial: TP 1202
- Measurement SW: DASY4, V4.7 Build 80 ; Postprocessing SW: SEMCAD, V1.8 Build 186

High Channel 140/Area Scan (6x10x1): Measurement grid: dx=10mm, dy=10mm
Maximum value of SAR (measured) = 0.139 mW/g
High Channel 140/Zoom Scan (8x8x8)/Cube 0: Measurement grid: dx=4.3mm, dy=4.3mm, dz=3mm
Reference Value = 4.35 V/m
Peak SAR (extrapolated) = 0.164 W/kg
SAR(1 g) = 0.091 mW/g; SAR(10 g) = 0.078 mW/g
Maximum value of SAR (measured) = 0.131 mW/g
High Channel 140/Zoom Scan (8x8x8)/Cube 1: Measurement grid: dx=4.3mm, dy=4.3mm, dz=3mm
Reference Value = 4.35 V/m
Peak SAR (extrapolated) = 0.236 W/kg
SAR(1 g) = 0.106 mW/g; SAR(10 g) = 0.086 mW/g
Maximum value of SAR (measured) = 0.155 mW/g

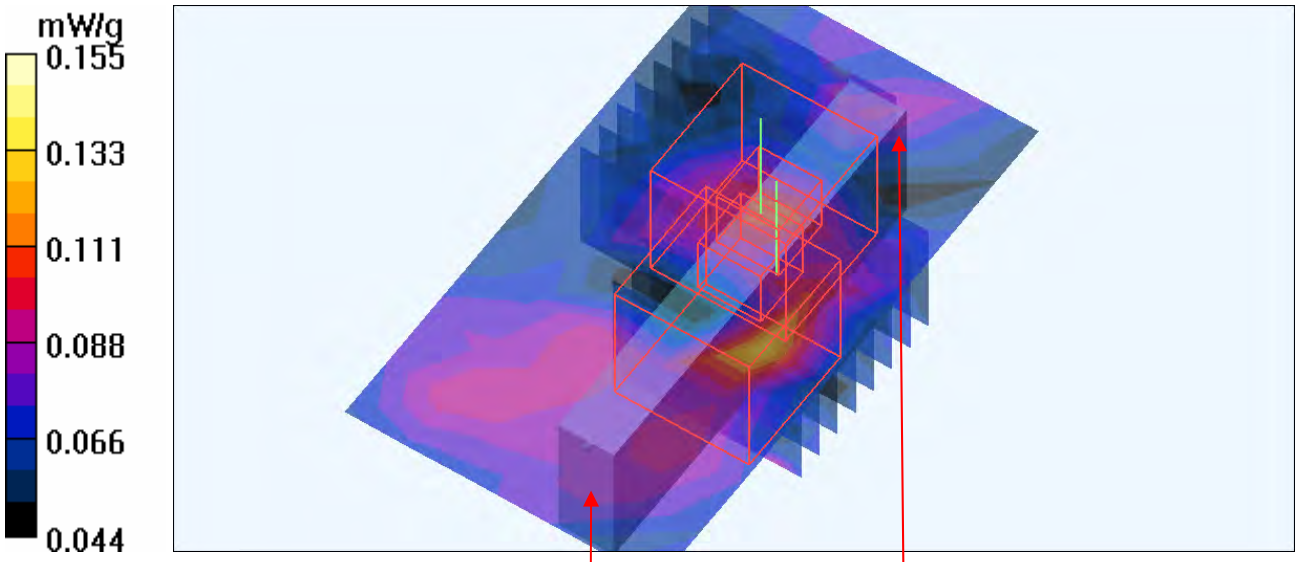

Head

Tail

Date/Time: 2009/4/23 19:08:56

Test Laboratory: Bureau Veritas ADT

M05-11aN 20M-Ch40

DUT: Wireless-N USB Network Adapter with Dual-Band ; Type: WUSB600N ver.2

Communication System: 11n 5G span20 ; Frequency: 5200 MHz ; Duty Cycle: 1:1 ; Modulation type: BPSK
Medium: MSL5800 Medium parameters used: f = 5200 MHz; σ = 5.16 mho/m; εr = 50.9; ρ = 1000 kg/m^3
Phantom section: Flat Section ; Separation distance : 5 mm (The edge side of the EUT to the Phantom)

DASY4 Configuration:
- Probe: EX3DV3 - SN3504 ; ConvF(4.38, 4.38, 4.38) ; Calibrated: 2009/1/21
- Sensor-Surface: 3mm (Mechanical Surface Detection)
- Electronics: DAE3 Sn510 ; Calibrated: 2009/1/21
- Phantom: SAM 12 ; Type: SAM V4.0 ; Serial: TP 1202
- Measurement SW: DASY4, V4.7 Build 80 ; Postprocessing SW: SEMCAD, V1.8 Build 186

Mid Channel 40/Area Scan (6x10x1): Measurement grid: dx=10mm, dy=10mm
Maximum value of SAR (measured) = 0.166 mW/g

Mid Channel 40/Zoom Scan (8x8x8)/Cube 0: Measurement grid: dx=4.3mm, dy=4.3mm, dz=3mm
Reference Value = 4.53 V/m
Peak SAR (extrapolated) = 0.366 W/kg
SAR(1 g) = 0.137 mW/g; SAR(10 g) = 0.091 mW/g
Maximum value of SAR (measured) = 0.174 mW/g

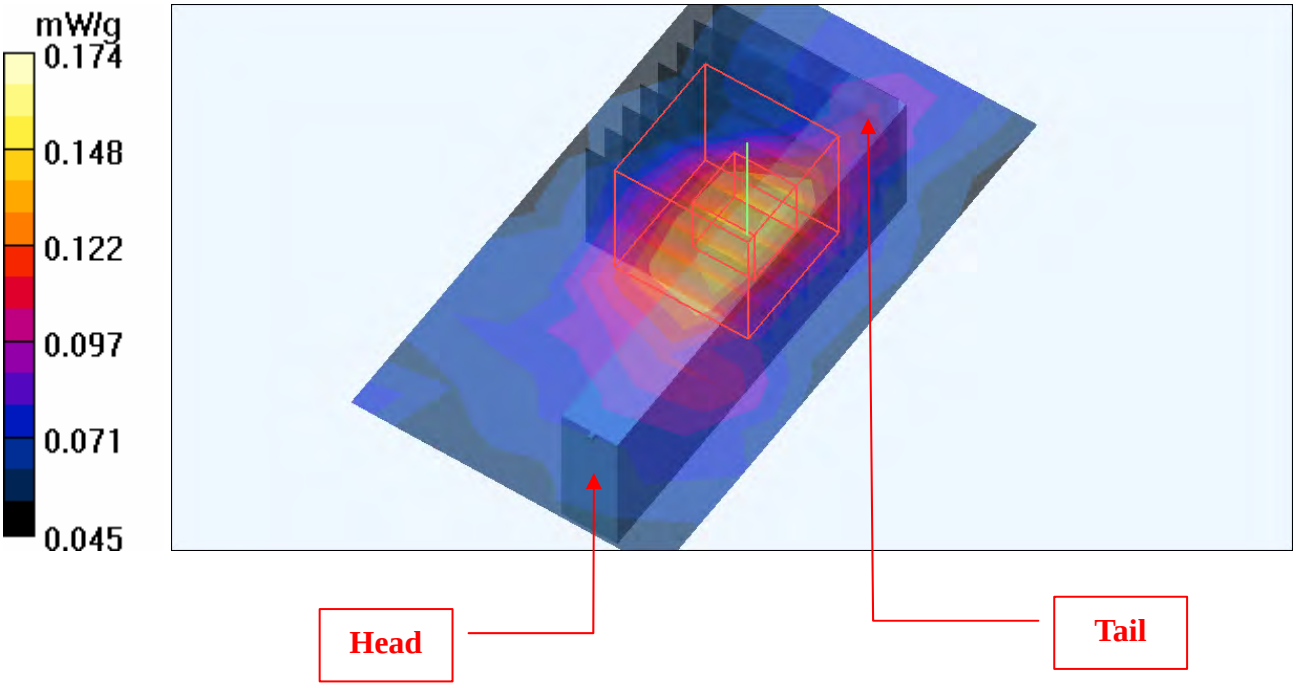

Date/Time: 2009/4/23 19:32:18

Test Laboratory: Bureau Veritas ADT

M05-11aN 20M-Ch52

DUT: Wireless-N USB Network Adapter with Dual-Band ; Type: WUSB600N ver.2

Communication System: 11n 5G span20 ; Frequency: 5260 MHz ; Duty Cycle: 1:1 ; Modulation type: BPSK
Medium: MSL5800 Medium parameters used: f = 5260 MHz; σ = 5.26 mho/m; εr = 50.8; ρ = 1000 kg/m^3
Phantom section: Flat Section ; Separation distance : 5 mm (The edge side of the EUT to the Phantom)

DASY4 Configuration:
- Probe: EX3DV3 - SN3504 ; ConvF(4.06, 4.06, 4.06) ; Calibrated: 2009/1/21
- Sensor-Surface: 3mm (Mechanical Surface Detection)
- Electronics: DAE3 Sn510 ; Calibrated: 2009/1/21
- Phantom: SAM 12 ; Type: SAM V4.0 ; Serial: TP 1202
- Measurement SW: DASY4, V4.7 Build 80 ; Postprocessing SW: SEMCAD, V1.8 Build 186

Low Channel 52/Area Scan (6x10x1): Measurement grid: dx=10mm, dy=10mm
Maximum value of SAR (measured) = 0.450 mW/g

Low Channel 52/Zoom Scan (8x8x8)/Cube 0: Measurement grid: dx=4.3mm, dy=4.3mm, dz=3mm
Reference Value = 7.48 V/m
Peak SAR (extrapolated) = 0.879 W/kg
SAR(1 g) = 0.332 mW/g; SAR(10 g) = 0.173 mW/g
Maximum value of SAR (measured) = 0.431 mW/g

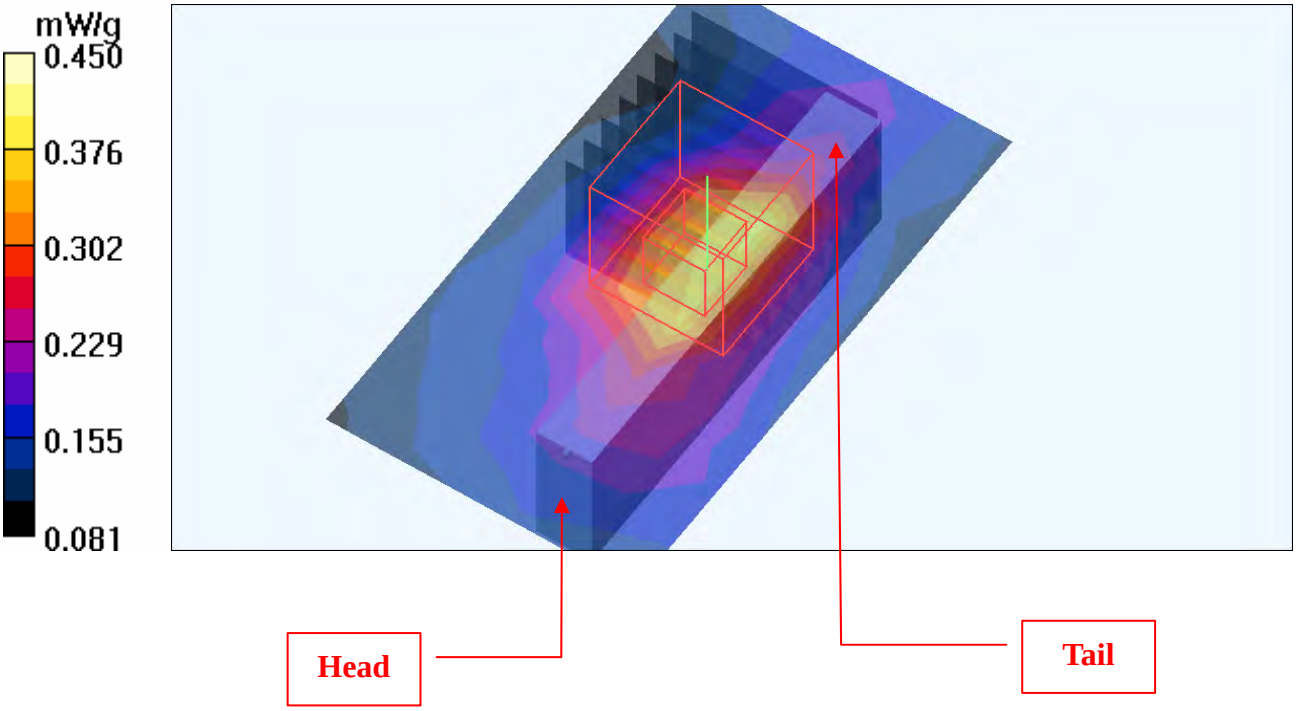

Date/Time: 2009/4/23 19:54:24

Test Laboratory: Bureau Veritas ADT

M05-11aN 20M-Ch140

DUT: Wireless-N USB Network Adapter with Dual-Band ; Type: WUSB600N ver.2

Communication System: 11n 5G span20 ; Frequency: 5700 MHz ; Duty Cycle: 1:1 ; Modulation type: BPSK
Medium: MSL5800 Medium parameters used: f = 5700 MHz; σ = 5.89 mho/m; εr = 49.9; ρ = 1000 kg/m^3
Phantom section: Flat Section ; Separation distance : 5 mm (The edge side of the EUT to the Phantom)

DASY4 Configuration:
- Probe: EX3DV3 - SN3504 ; ConvF(3.91, 3.91, 3.91) ; Calibrated: 2009/1/21
- Sensor-Surface: 3mm (Mechanical Surface Detection)
- Electronics: DAE3 Sn510 ; Calibrated: 2009/1/21
- Phantom: SAM 12 ; Type: SAM V4.0 ; Serial: TP 1202
- Measurement SW: DASY4, V4.7 Build 80 ; Postprocessing SW: SEMCAD, V1.8 Build 186

High Channel 140/Area Scan (6x10x1): Measurement grid: dx=10mm, dy=10mm
Maximum value of SAR (measured) = 0.362 mW/g

High Channel 140/Zoom Scan (8x8x8)/Cube 0: Measurement grid: dx=4.3mm, dy=4.3mm, dz=3mm
Reference Value = 5.80 V/m
Peak SAR (extrapolated) = 1.41 W/kg
SAR(1 g) = 0.367 mW/g; SAR(10 g) = 0.183 mW/g
Maximum value of SAR (measured) = 0.469 mW/g

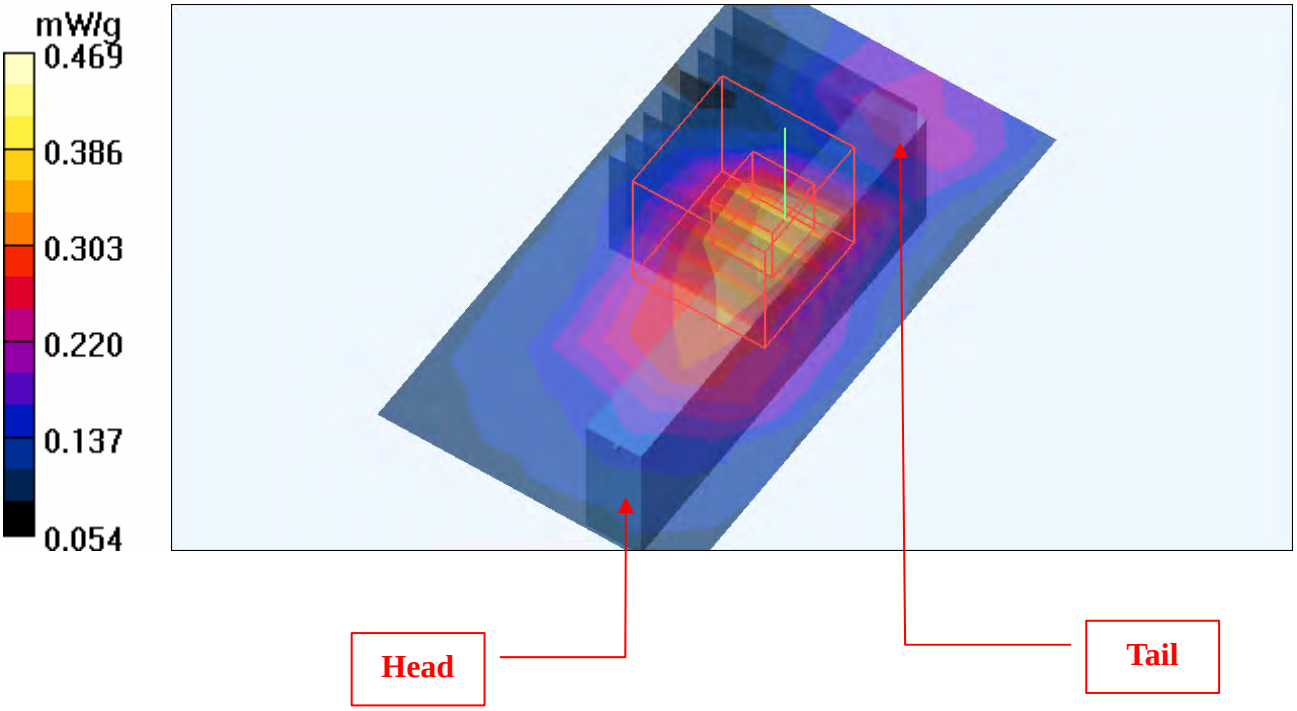

Date/Time: 2009/4/23 21:13:19

Test Laboratory: Bureau Veritas ADT

M06-11aN 40M-Ch46

DUT: Wireless-N USB Network Adapter with Dual-Band ; Type: WUSB600N ver.2

Communication System: 11n 5G span40 ; Frequency: 5230 MHz ; Duty Cycle: 1:1 ; Modulation type: BPSK
Medium: MSL5800 Medium parameters used: f = 5230 MHz; σ = 5.21 mho/m; ε_r = 50.8; ρ = 1000 kg/m^3
Phantom section: Flat Section ; Separation distance : 5 mm (The edge side of the EUT to the Phantom)

DASY4 Configuration:
- Probe: EX3DV3 - SN3504 ; ConvF(4.38, 4.38, 4.38) ; Calibrated: 2009/1/21
- Sensor-Surface: 3mm (Mechanical Surface Detection)
- Electronics: DAE3 Sn510 ; Calibrated: 2009/1/21
- Phantom: SAM 12 ; Type: SAM V4.0 ; Serial: TP 1202
- Measurement SW: DASY4, V4.7 Build 80 ; Postprocessing SW: SEMCAD, V1.8 Build 186

High Channel 46/Area Scan (6x10x1): Measurement grid: dx=10mm, dy=10mm
Maximum value of SAR (measured) = 0.168 mW/g

High Channel 46/Zoom Scan (8x8x8)/Cube 0: Measurement grid: dx=4.3mm, dy=4.3mm, dz=3mm
Reference Value = 5.07 V/m
Peak SAR (extrapolated) = 0.311 W/kg
SAR(1 g) = 0.145 mW/g; SAR(10 g) = 0.102 mW/g
Maximum value of SAR (measured) = 0.177 mW/g

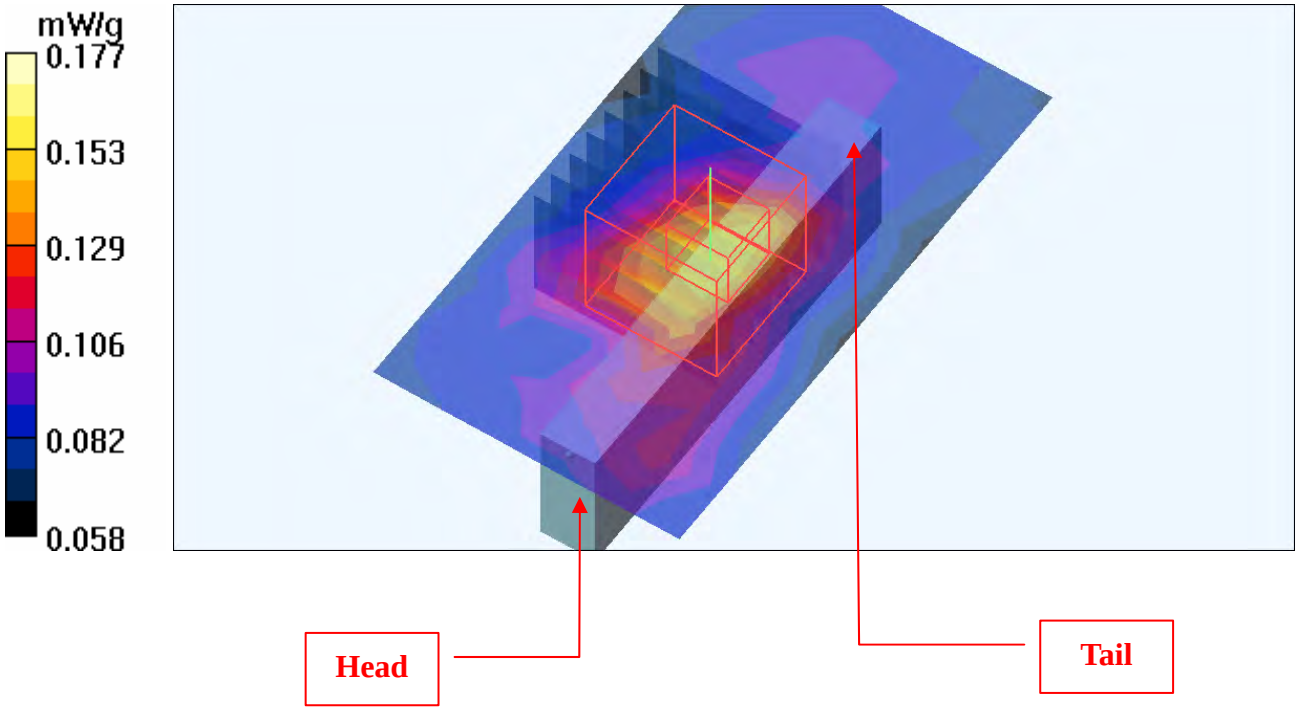

Date/Time: 2009/4/23 21:41:40

Test Laboratory: Bureau Veritas ADT

M06-11aN 40M-Ch54

DUT: Wireless-N USB Network Adapter with Dual-Band ; Type: WUSB600N ver.2

Communication System: 11n 5G span40 ; Frequency: 5270 MHz ; Duty Cycle: 1:1 ; Modulation type: BPSK
Medium: MSL5800 Medium parameters used: f = 5270 MHz; σ = 5.27 mho/m; ε_r = 50.8; ρ = 1000 kg/m^3
Phantom section: Flat Section ; Separation distance : 5 mm (The edge side of the EUT to the Phantom)

DASY4 Configuration:
- Probe: EX3DV3 - SN3504 ; ConvF(4.06, 4.06, 4.06) ; Calibrated: 2009/1/21
- Sensor-Surface: 3mm (Mechanical Surface Detection)
- Electronics: DAE3 Sn510 ; Calibrated: 2009/1/21
- Phantom: SAM 12 ; Type: SAM V4.0 ; Serial: TP 1202
- Measurement SW: DASY4, V4.7 Build 80 ; Postprocessing SW: SEMCAD, V1.8 Build 186

Low Channel 54/Area Scan (6x10x1): Measurement grid: dx=10mm, dy=10mm
Maximum value of SAR (measured) = 0.148 mW/g

Low Channel 54/Zoom Scan (8x8x8)/Cube 0: Measurement grid: dx=4.3mm, dy=4.3mm, dz=3mm
Reference Value = 4.63 V/m
Peak SAR (extrapolated) = 0.414 W/kg
SAR(1 g) = 0.141 mW/g; SAR(10 g) = 0.100 mW/g
Maximum value of SAR (measured) = 0.172 mW/g

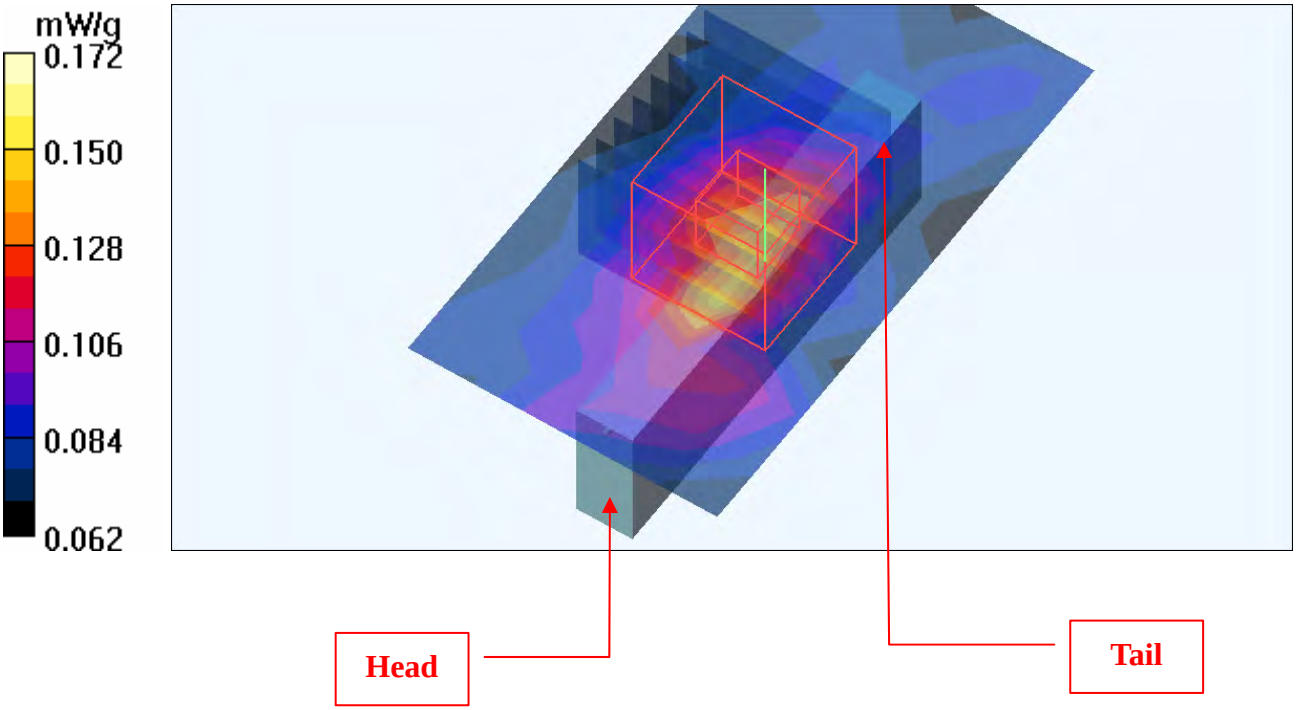

Date/Time: 2009/4/23 22:06:17

Test Laboratory: Bureau Veritas ADT

M06-11aN 40M-Ch134

DUT: Wireless-N USB Network Adapter with Dual-Band ; Type: WUSB600N ver.2

Communication System: 11n 5G span40 ; Frequency: 5670 MHz ; Duty Cycle: 1:1 ; Modulation type: BPSK
Medium: MSL5800 Medium parameters used: f = 5670 MHz; σ = 5.85 mho/m; ε_r = 50; ρ = 1000 kg/m^3
Phantom section: Flat Section ; Separation distance : 5 mm (The edge side of the EUT to the Phantom)

DASY4 Configuration:
- Probe: EX3DV3 - SN3504 ; ConvF(3.91, 3.91, 3.91) ; Calibrated: 2009/1/21
- Sensor-Surface: 3mm (Mechanical Surface Detection)
- Electronics: DAE3 Sn510 ; Calibrated: 2009/1/21
- Phantom: SAM 12 ; Type: SAM V4.0 ; Serial: TP 1202
- Measurement SW: DASY4, V4.7 Build 80 ; Postprocessing SW: SEMCAD, V1.8 Build 186

High Channel 134/Area Scan (6x10x1): Measurement grid: dx=10mm, dy=10mm
Maximum value of SAR (measured) = 0.194 mW/g

High Channel 134/Zoom Scan (8x8x8)/Cube 0: Measurement grid: dx=4.3mm, dy=4.3mm, dz=3mm
Reference Value = 4.88 V/m
Peak SAR (extrapolated) = 0.413 W/kg
SAR(1 g) = 0.167 mW/g; SAR(10 g) = 0.109 mW/g
Maximum value of SAR (measured) = 0.205 mW/g

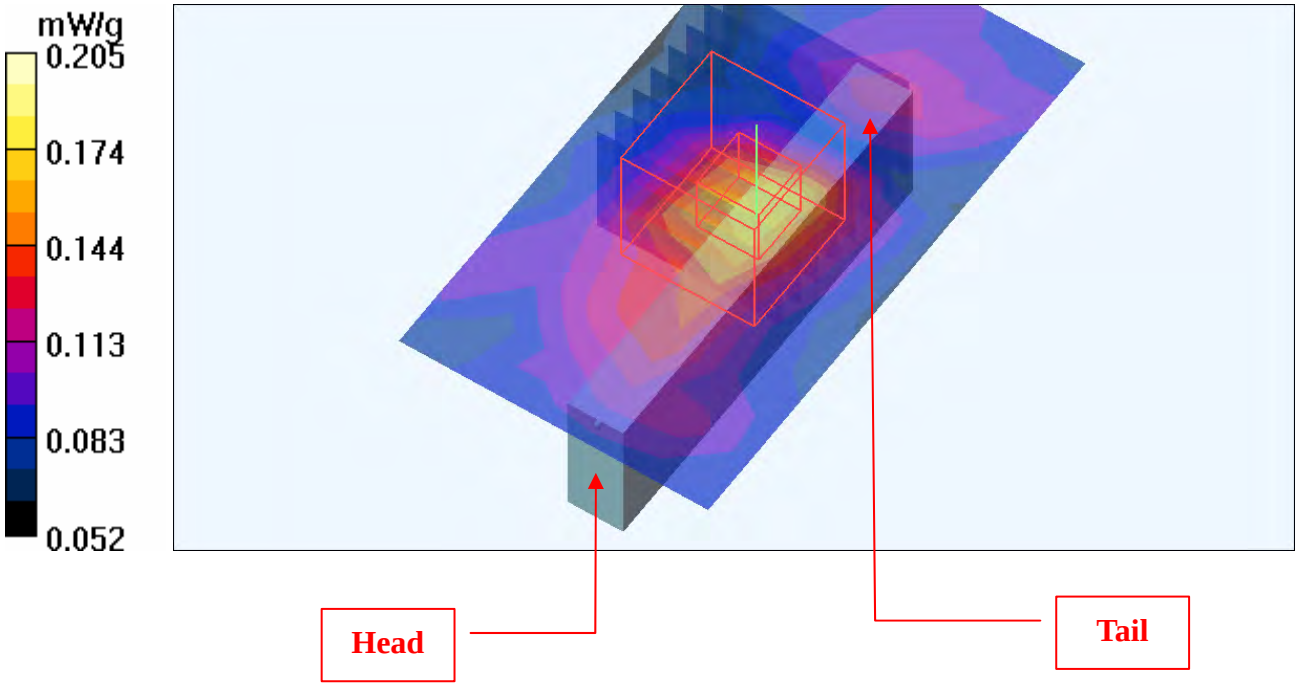

Date/Time: 2009/4/23 23:33:52

Test Laboratory: Bureau Veritas ADT

M07-11a-Ch40

DUT: Wireless-N USB Network Adapter with Dual-Band ; Type: WUSB600N ver.2

Communication System: 802.11a ; Frequency: 5200 MHz ; Duty Cycle: 1:1 ; Modulation type: BPSK
Medium: MSL5800 Medium parameters used: f = 5200 MHz; σ = 5.16 mho/m; εr = 50.9; ρ = 1000 kg/m^3
Phantom section: Flat Section ; Separation distance : 5 mm (The front side of the EUT to the Phantom)

DASY4 Configuration:
- Probe: EX3DV3 - SN3504 ; ConvF(4.38, 4.38, 4.38) ; Calibrated: 2009/1/21
- Sensor-Surface: 3mm (Mechanical Surface Detection)
- Electronics: DAE3 Sn510 ; Calibrated: 2009/1/21
- Phantom: SAM 12 ; Type: SAM V4.0 ; Serial: TP 1202
- Measurement SW: DASY4, V4.7 Build 80 ; Postprocessing SW: SEMCAD, V1.8 Build 186

Mid Channel 40/Area Scan (6x10x1): Measurement grid: dx=10mm, dy=10mm
Maximum value of SAR (measured) = 0.408 mW/g

Mid Channel 40/Zoom Scan (8x8x8)/Cube 0: Measurement grid: dx=4.3mm, dy=4.3mm, dz=3mm
Reference Value = 6.61 V/m
Peak SAR (extrapolated) = 0.878 W/kg
SAR(1 g) = 0.245 mW/g; SAR(10 g) = 0.084 mW/g
Maximum value of SAR (measured) = 0.351 mW/g

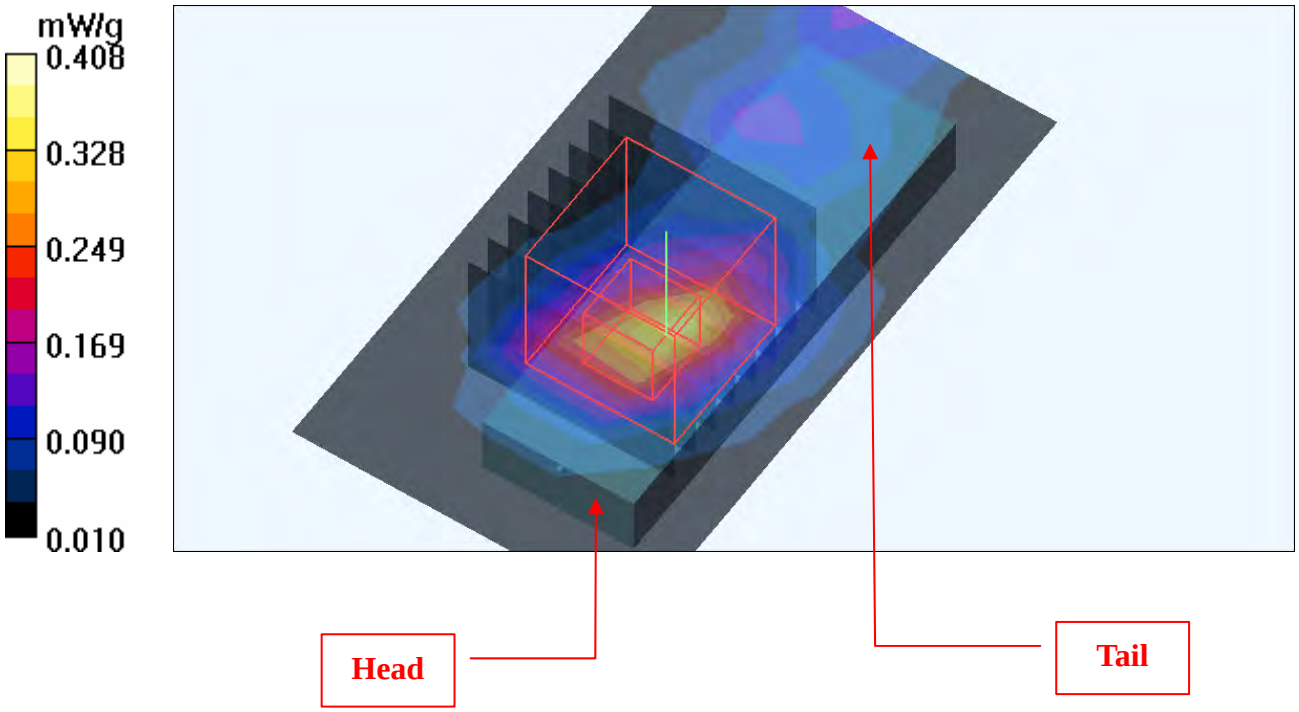

Date/Time: 2009/4/23 23:59:03

Test Laboratory: Bureau Veritas ADT

M07-11a-Ch64

DUT: Wireless-N USB Network Adapter with Dual-Band ; Type: WUSB600N ver.2

Communication System: 802.11a ; Frequency: 5320 MHz ; Duty Cycle: 1:1 ; Modulation type: BPSK
Medium: MSL5800 Medium parameters used: f = 5320 MHz; σ = 5.34 mho/m; ε_r = 50.7; ρ = 1000 kg/m^3
Phantom section: Flat Section ; Separation distance : 5 mm (The front side of the EUT to the Phantom)

DASY4 Configuration:
- Probe: EX3DV3 - SN3504 ; ConvF(4.06, 4.06, 4.06) ; Calibrated: 2009/1/21
- Sensor-Surface: 3mm (Mechanical Surface Detection)
- Electronics: DAE3 Sn510 ; Calibrated: 2009/1/21
- Phantom: SAM 12 ; Type: SAM V4.0 ; Serial: TP 1202
- Measurement SW: DASY4, V4.7 Build 80 ; Postprocessing SW: SEMCAD, V1.8 Build 186

High Channel 64/Area Scan (6x10x1): Measurement grid: dx=10mm, dy=10mm
Maximum value of SAR (measured) = 0.734 mW/g

High Channel 64/Zoom Scan (8x8x8)/Cube 0: Measurement grid: dx=4.3mm, dy=4.3mm, dz=3mm
Reference Value = 5.90 V/m
Peak SAR (extrapolated) = 1.62 W/kg
SAR(1 g) = 0.467 mW/g; SAR(10 g) = 0.163 mW/g
Maximum value of SAR (measured) = 0.696 mW/g

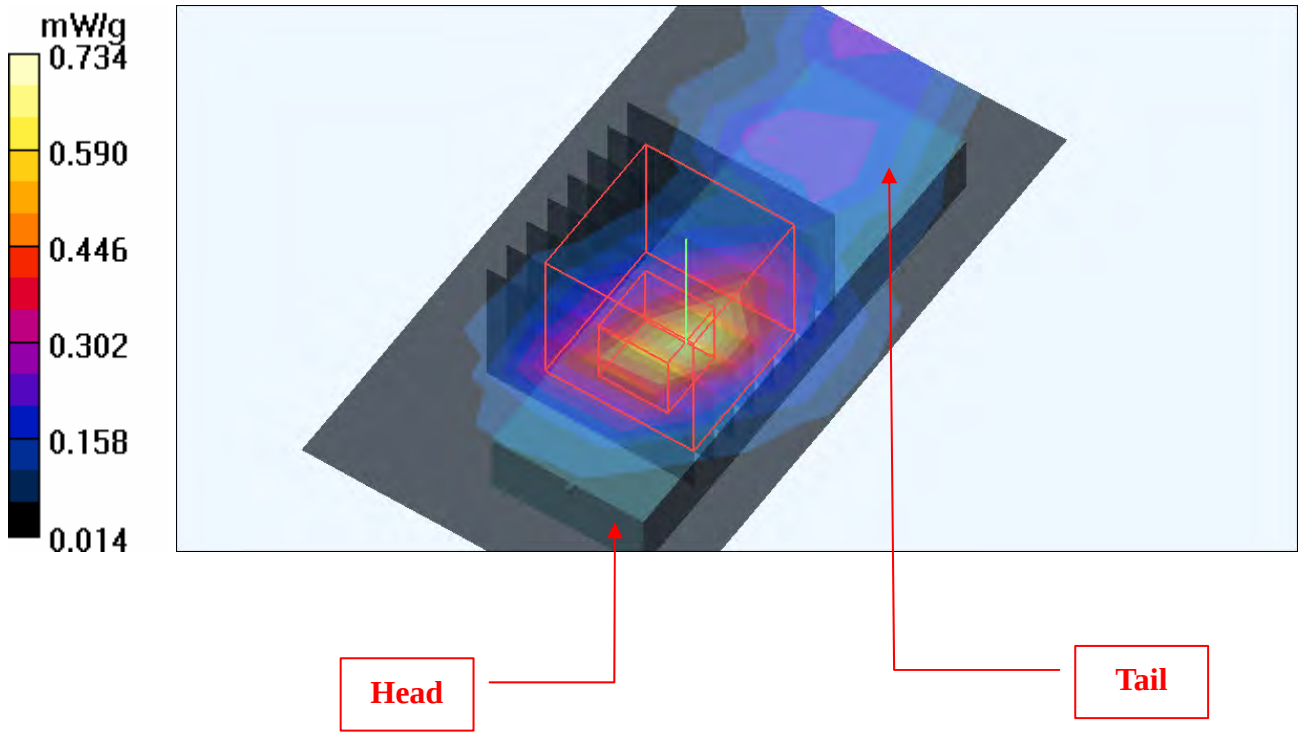

Date/Time: 2009/4/24 03:12:41

Test Laboratory: Bureau Veritas ADT

M07-11a-Ch140

DUT: Wireless-N USB Network Adapter with Dual-Band ; Type: WUSB600N ver.2

Communication System: 802.11a ; Frequency: 5700 MHz ; Duty Cycle: 1:1 ; Modulation type: BPSK
Medium: MSL5800 Medium parameters used: f = 5700 MHz; σ = 5.93 mho/m; ε_r = 49.3; ρ = 1000 kg/m^3
Phantom section: Flat Section ; Separation distance : 5 mm (The front side of the EUT to the Phantom)

DASY4 Configuration:
- Probe: EX3DV3 - SN3504 ; ConvF(3.91, 3.91, 3.91) ; Calibrated: 2009/1/21
- Sensor-Surface: 3mm (Mechanical Surface Detection)
- Electronics: DAE3 Sn510 ; Calibrated: 2009/1/21
- Phantom: SAM 12 ; Type: SAM V4.0 ; Serial: TP 1202
- Measurement SW: DASY4, V4.7 Build 80 ; Postprocessing SW: SEMCAD, V1.8 Build 186

High Channel 140/Area Scan (6x10x1): Measurement grid: dx=10mm, dy=10mm
Maximum value of SAR (measured) = 0.363 mW/g

High Channel 140/Zoom Scan (8x8x8)/Cube 0: Measurement grid: dx=4.3mm, dy=4.3mm, dz=3mm
Reference Value = 3.36 V/m
Peak SAR (extrapolated) = 0.997 W/kg
SAR(1 g) = 0.248 mW/g; SAR(10 g) = 0.093 mW/g
Maximum value of SAR (measured) = 0.352 mW/g

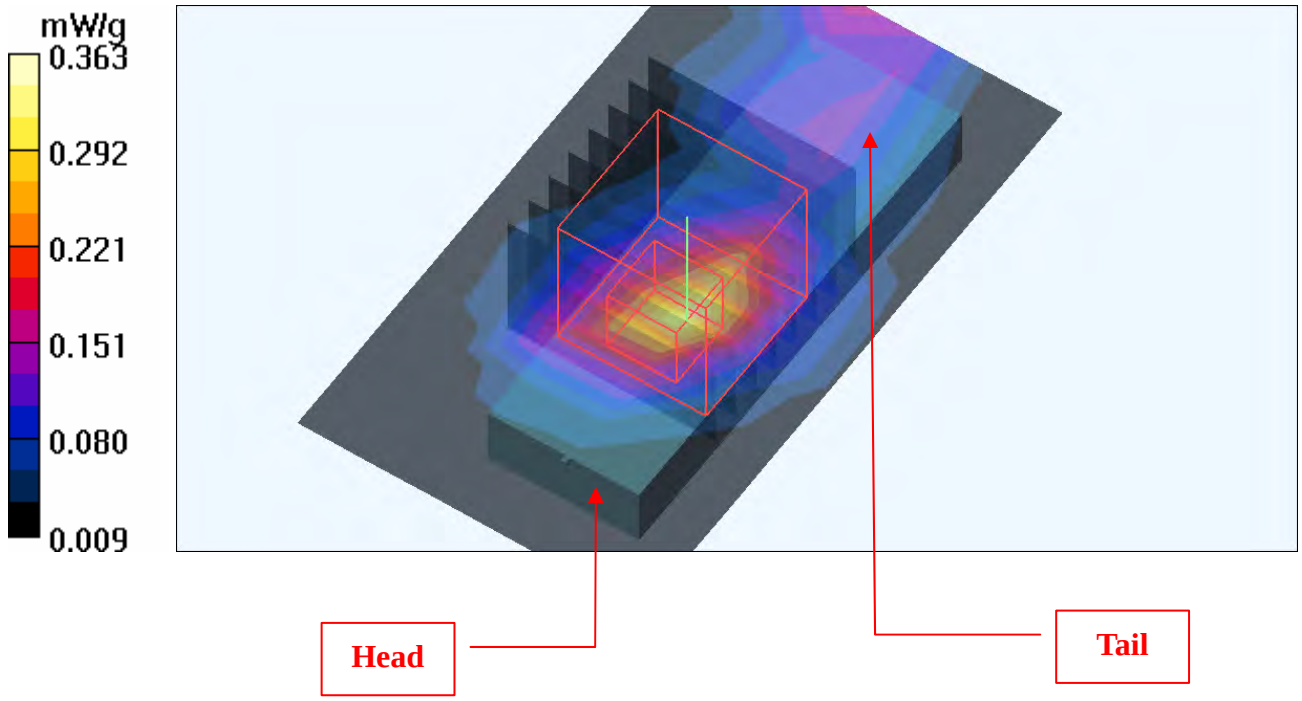

Date/Time: 2009/4/24 04:06:00

Test Laboratory: Bureau Veritas ADT

M08-11aN 20M-Ch40

DUT: Wireless-N USB Network Adapter with Dual-Band ; Type: WUSB600N ver.2

Communication System: 11n 5G span20 ; Frequency: 5200 MHz ; Duty Cycle: 1:1 ; Modulation type: BPSK
Medium: MSL5800 Medium parameters used: f = 5200 MHz; σ = 5.2 mho/m; ε_r = 50.3; ρ = 1000 kg/m^3
Phantom section: Flat Section ; Separation distance : 5 mm (The front side of the EUT to the Phantom)

DASY4 Configuration:
- Probe: EX3DV3 - SN3504 ; ConvF(4.38, 4.38, 4.38) ; Calibrated: 2009/1/21
- Sensor-Surface: 3mm (Mechanical Surface Detection)
- Electronics: DAE3 Sn510 ; Calibrated: 2009/1/21
- Phantom: SAM 12 ; Type: SAM V4.0 ; Serial: TP 1202
- Measurement SW: DASY4, V4.7 Build 80 ; Postprocessing SW: SEMCAD, V1.8 Build 186

Mid Channel 40/Area Scan (6x10x1): Measurement grid: dx=10mm, dy=10mm
Maximum value of SAR (measured) = 1.18 mW/g

Mid Channel 40/Zoom Scan (8x8x8)/Cube 0: Measurement grid: dx=4.3mm, dy=4.3mm, dz=3mm
Reference Value = 9.64 V/m
Peak SAR (extrapolated) = 2.32 W/kg
SAR(1 g) = 0.661 mW/g; SAR(10 g) = 0.217 mW/g
Maximum value of SAR (measured) = 0.978 mW/g

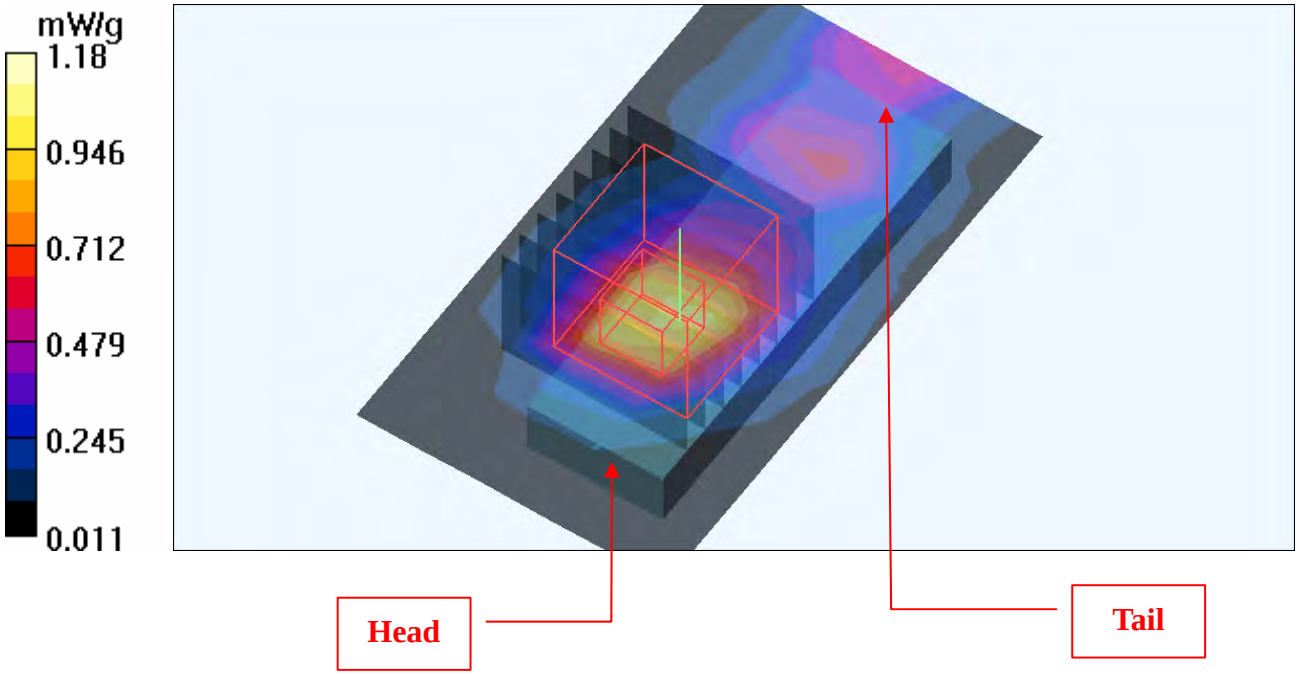

Date/Time: 2009/4/24 04:35:26

Test Laboratory: Bureau Veritas ADT

M08-11aN 20M-Ch52

DUT: Wireless-N USB Network Adapter with Dual-Band ; Type: WUSB600N ver.2

Communication System: 11n 5G span20 ; Frequency: 5260 MHz ; Duty Cycle: 1:1 ; Modulation type: BPSK
Medium: MSL5800 Medium parameters used: f = 5260 MHz; σ = 5.29 mho/m; ε_r = 50.2; ρ = 1000 kg/m^3
Phantom section: Flat Section ; Separation distance : 5 mm (The front side of the EUT to the Phantom)

DASY4 Configuration:
- Probe: EX3DV3 - SN3504 ; ConvF(4.06, 4.06, 4.06) ; Calibrated: 2009/1/21
- Sensor-Surface: 3mm (Mechanical Surface Detection)
- Electronics: DAE3 Sn510 ; Calibrated: 2009/1/21
- Phantom: SAM 12 ; Type: SAM V4.0 ; Serial: TP 1202
- Measurement SW: DASY4, V4.7 Build 80 ; Postprocessing SW: SEMCAD, V1.8 Build 186

Low Channel 52/Area Scan (6x10x1): Measurement grid: dx=10mm, dy=10mm
Maximum value of SAR (measured) = 0.845 mW/g

Low Channel 52/Zoom Scan (8x8x8)/Cube 0: Measurement grid: dx=4.3mm, dy=4.3mm, dz=3mm
Reference Value = 6.72 V/m
Peak SAR (extrapolated) = 2.60 W/kg
SAR(1 g) = 0.746 mW/g; SAR(10 g) = 0.243 mW/g
Maximum value of SAR (measured) = 1.09 mW/g

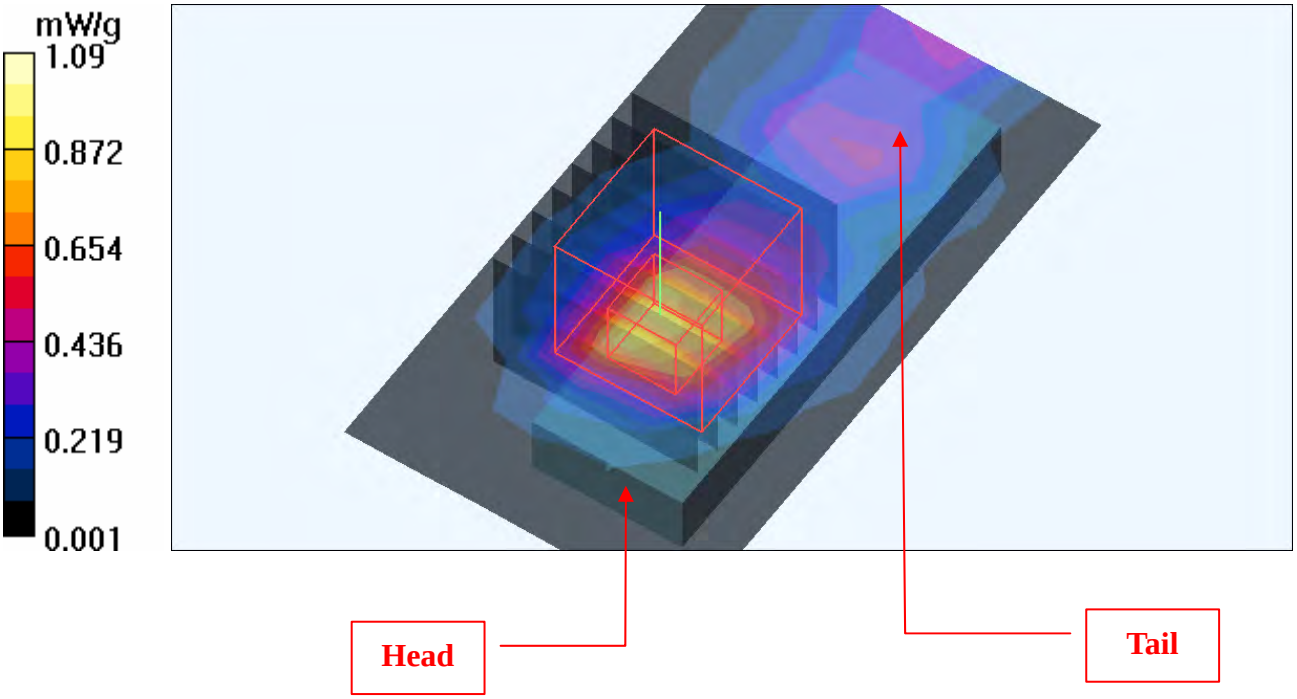

Date/Time: 2009/4/24 05:29:31

Test Laboratory: Bureau Veritas ADT

M08-11aN 20M-Ch140

DUT: Wireless-N USB Network Adapter with Dual-Band ; Type: WUSB600N ver.2

Communication System: 11n 5G span20 ; Frequency: 5700 MHz ; Duty Cycle: 1:1 ; Modulation type: BPSK

Medium: MSL5800 Medium parameters used: f = 5700 MHz; σ = 5.93 mho/m; ε_r = 49.3; ρ = 1000 kg/m^3

Phantom section: Flat Section ; Separation distance : 5 mm (The front side of the EUT to the Phantom)

DASY4 Configuration:

- Probe: EX3DV3 - SN3504 ; ConvF(3.91, 3.91, 3.91) ; Calibrated: 2009/1/21
- Sensor-Surface: 3mm (Mechanical Surface Detection)
- Electronics: DAE3 Sn510 ; Calibrated: 2009/1/21
- Phantom: SAM 12 ; Type: SAM V4.0 ; Serial: TP 1202
- Measurement SW: DASY4, V4.7 Build 80 ; Postprocessing SW: SEMCAD, V1.8 Build 186

High Channel 140/Area Scan (6x10x1): Measurement grid: dx=10mm, dy=10mm

Maximum value of SAR (measured) = 0.447 mW/g

High Channel 140/Zoom Scan (8x8x8)/Cube 0: Measurement grid: dx=4.3mm, dy=4.3mm, dz=3mm

Reference Value = 3.99 V/m

Peak SAR (extrapolated) = 1.61 W/kg

SAR(1 g) = 0.394 mW/g; SAR(10 g) = 0.146 mW/g

Maximum value of SAR (measured) = 0.563 mW/g

High Channel 140/Zoom Scan (8x8x8)/Cube 1: Measurement grid: dx=4.3mm, dy=4.3mm, dz=3mm

Reference Value = 3.99 V/m

Peak SAR (extrapolated) = 1.05 W/kg

SAR(1 g) = 0.275 mW/g; SAR(10 g) = 0.104 mW/g

Maximum value of SAR (measured) = 0.392 mW/g

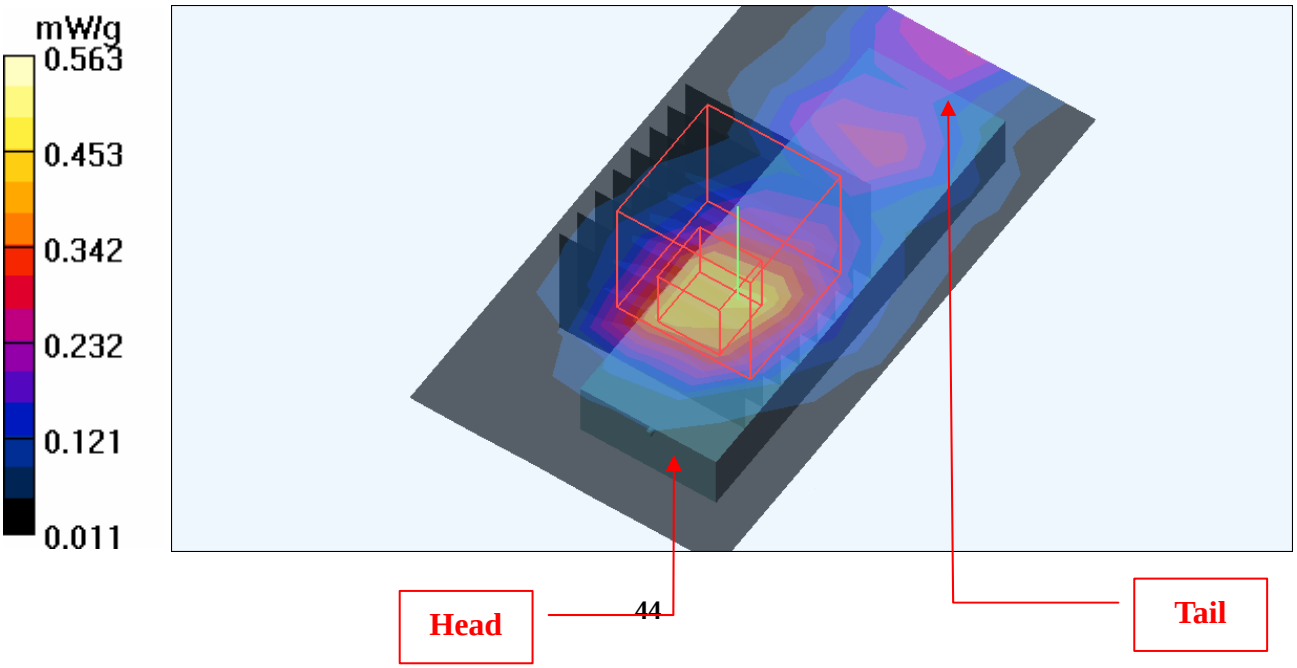

Date/Time: 2009/4/24 06:55:50

Test Laboratory: Bureau Veritas ADT

M09-11aN 40M-Ch46

DUT: Wireless-N USB Network Adapter with Dual-Band ; Type: WUSB600N ver.2

Communication System: 11n 5G span40 ; Frequency: 5230 MHz ; Duty Cycle: 1:1 ; Modulation type: BPSK
Medium: MSL5800 Medium parameters used: f = 5230 MHz; σ = 5.25 mho/m; ε_r = 50.2; ρ = 1000 kg/m^3
Phantom section: Flat Section ; Separation distance : 5 mm (The front side of the EUT to the Phantom)

DASY4 Configuration:
- Probe: EX3DV3 - SN3504 ; ConvF(4.38, 4.38, 4.38) ; Calibrated: 2009/1/21
- Sensor-Surface: 3mm (Mechanical Surface Detection)
- Electronics: DAE3 Sn510 ; Calibrated: 2009/1/21
- Phantom: SAM 12 ; Type: SAM V4.0 ; Serial: TP 1202
- Measurement SW: DASY4, V4.7 Build 80 ; Postprocessing SW: SEMCAD, V1.8 Build 186

Low Channel 46/Area Scan (6x10x1): Measurement grid: dx=10mm, dy=10mm
Maximum value of SAR (measured) = 0.278 mW/g

Low Channel 46/Zoom Scan (8x8x8)/Cube 0: Measurement grid: dx=4.3mm, dy=4.3mm, dz=3mm
Reference Value = 3.91 V/m
Peak SAR (extrapolated) = 0.916 W/kg
SAR(1 g) = 0.255 mW/g; SAR(10 g) = 0.089 mW/g
Maximum value of SAR (measured) = 0.374 mW/g

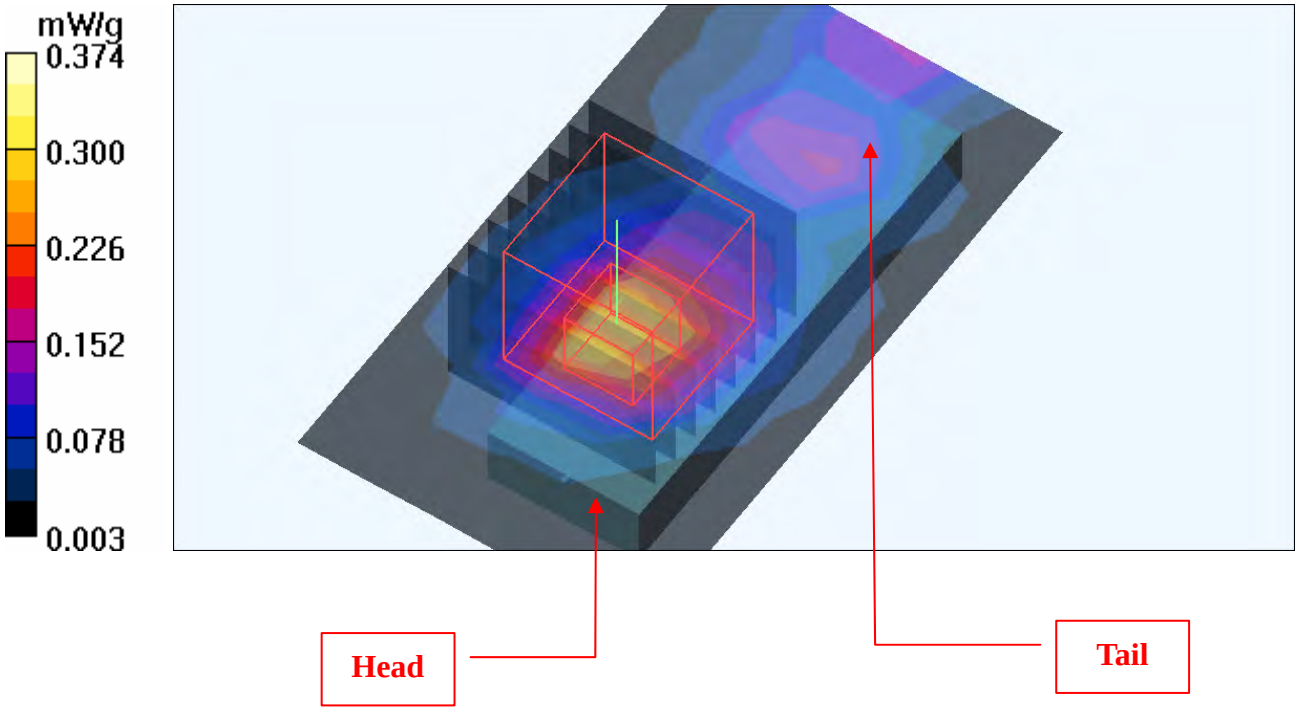

Date/Time: 2009/4/24 07:22:51

Test Laboratory: Bureau Veritas ADT

M09-11aN 40M-Ch54

DUT: Wireless-N USB Network Adapter with Dual-Band ; Type: WUSB600N ver.2

Communication System: 11n 5G span40 ; Frequency: 5270 MHz ; Duty Cycle: 1:1 ; Modulation type: BPSK
Medium: MSL5800 Medium parameters used: f = 5270 MHz; σ = 5.31 mho/m; ε_r = 50.2; ρ = 1000 kg/m^3
Phantom section: Flat Section ; Separation distance : 5 mm (The front side of the EUT to the Phantom)

DASY4 Configuration:
- Probe: EX3DV3 - SN3504 ; ConvF(4.06, 4.06, 4.06) ; Calibrated: 2009/1/21
- Sensor-Surface: 3mm (Mechanical Surface Detection)
- Electronics: DAE3 Sn510 ; Calibrated: 2009/1/21
- Phantom: SAM 12 ; Type: SAM V4.0 ; Serial: TP 1202
- Measurement SW: DASY4, V4.7 Build 80 ; Postprocessing SW: SEMCAD, V1.8 Build 186

Mid Channel 54/Area Scan (6x10x1): Measurement grid: dx=10mm, dy=10mm
Maximum value of SAR (measured) = 0.242 mW/g

Mid Channel 54/Zoom Scan (8x8x8)/Cube 0: Measurement grid: dx=4.3mm, dy=4.3mm, dz=3mm
Reference Value = 3.56 V/m
Peak SAR (extrapolated) = 0.864 W/kg
SAR(1 g) = 0.233 mW/g; SAR(10 g) = 0.080 mW/g
Maximum value of SAR (measured) = 0.333 mW/g

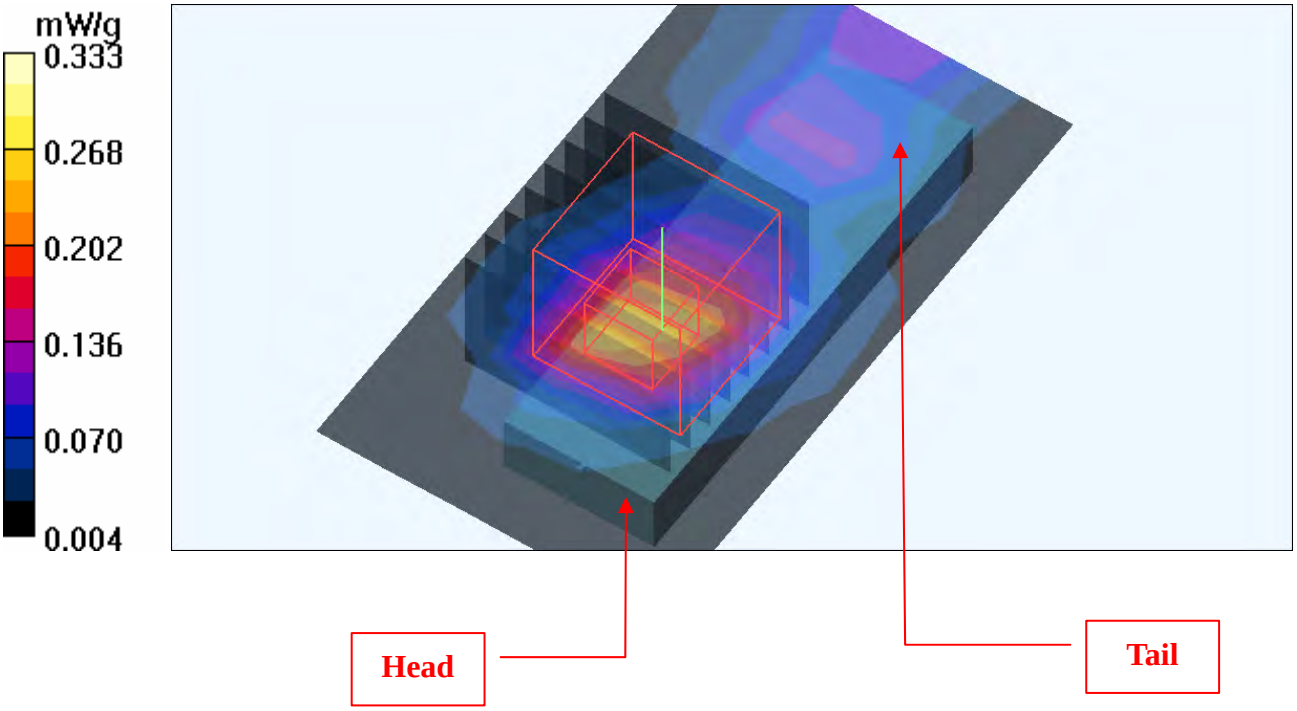

Date/Time: 2009/4/24 08:13:01

Test Laboratory: Bureau Veritas ADT

M09-11aN 40M-Ch134

DUT: Wireless-N USB Network Adapter with Dual-Band ; Type: WUSB600N ver.2

Communication System: 11n 5G span40 ; Frequency: 5670 MHz ; Duty Cycle: 1:1 ; Modulation type: BPSK

Medium: MSL5800 Medium parameters used: f = 5670 MHz; σ = 5.89 mho/m; ε_r = 49.4; ρ = 1000 kg/m^3

Phantom section: Flat Section ; Separation distance : 5 mm (The front side of the EUT to the Phantom)

DASY4 Configuration:

- Probe: EX3DV3 - SN3504 ; ConvF(3.91, 3.91, 3.91) ; Calibrated: 2009/1/21
- Sensor-Surface: 3mm (Mechanical Surface Detection)
- Electronics: DAE3 Sn510 ; Calibrated: 2009/1/21
- Phantom: SAM 12 ; Type: SAM V4.0 ; Serial: TP 1202
- Measurement SW: DASY4, V4.7 Build 80 ; Postprocessing SW: SEMCAD, V1.8 Build 186

High Channel 134/Area Scan (6x10x1): Measurement grid: dx=10mm, dy=10mm

Maximum value of SAR (measured) = 0.441 mW/g

High Channel 134/Zoom Scan (8x8x8)/Cube 0: Measurement grid: dx=4.3mm, dy=4.3mm, dz=3mm

Reference Value = 4.23 V/m

Peak SAR (extrapolated) = 1.46 W/kg

SAR(1 g) = 0.362 mW/g; SAR(10 g) = 0.133 mW/g

Maximum value of SAR (measured) = 0.527 mW/g

High Channel 134/Zoom Scan (8x8x8)/Cube 1: Measurement grid: dx=4.3mm, dy=4.3mm, dz=3mm

Reference Value = 4.23 V/m

Peak SAR (extrapolated) = 0.737 W/kg

SAR(1 g) = 0.225 mW/g; SAR(10 g) = 0.083 mW/g

Maximum value of SAR (measured) = 0.343 mW/g

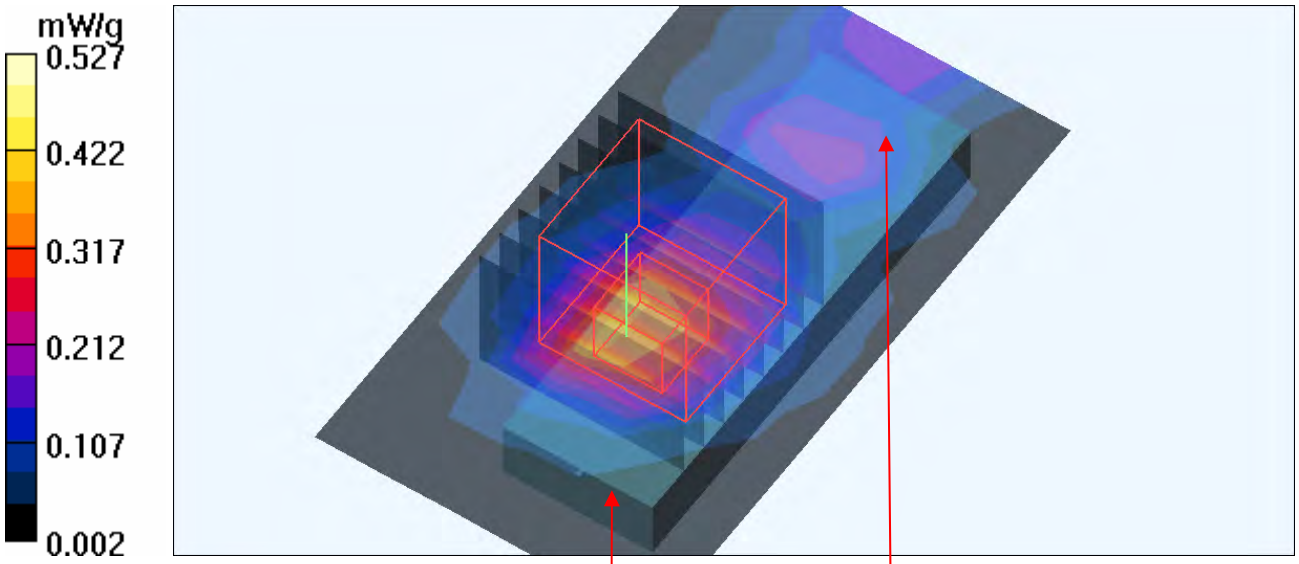

Head

Tail

Date/Time: 2009/4/24 09:53:12

Test Laboratory: Bureau Veritas ADT

M10-11a-Ch40

DUT: Wireless-N USB Network Adapter with Dual-Band ; Type: WUSB600N ver.2

Communication System: 802.11a ; Frequency: 5200 MHz ; Duty Cycle: 1:1 ; Modulation type: BPSK
Medium: MSL5800 Medium parameters used: f = 5200 MHz; σ = 5.2 mho/m; ε_r = 50.3; ρ = 1000 kg/m^3
Phantom section: Flat Section ; Separation distance : 5 mm (The edge side of the EUT to the Phantom)

DASY4 Configuration:
- Probe: EX3DV3 - SN3504 ; ConvF(4.38, 4.38, 4.38) ; Calibrated: 2009/1/21
- Sensor-Surface: 3mm (Mechanical Surface Detection)
- Electronics: DAE3 Sn510 ; Calibrated: 2009/1/21
- Phantom: SAM 12 ; Type: SAM V4.0 ; Serial: TP 1202
- Measurement SW: DASY4, V4.7 Build 80 ; Postprocessing SW: SEMCAD, V1.8 Build 186

Mid Channel 40/Area Scan (6x10x1): Measurement grid: dx=10mm, dy=10mm
Maximum value of SAR (measured) = 0.238 mW/g

Mid Channel 40/Zoom Scan (8x8x8)/Cube 0: Measurement grid: dx=4.3mm, dy=4.3mm, dz=3mm
Reference Value = 5.35 V/m
Peak SAR (extrapolated) = 0.497 W/kg
SAR(1 g) = 0.167 mW/g; SAR(10 g) = 0.064 mW/g

Mid Channel 40/Zoom Scan (8x8x8)/Cube 1: Measurement grid: dx=4.3mm, dy=4.3mm, dz=3mm
Reference Value = 5.35 V/m
Peak SAR (extrapolated) = 0.331 W/kg
SAR(1 g) = 0.108 mW/g; SAR(10 g) = 0.039 mW/g
Maximum value of SAR (measured) = 0.156 mW/g

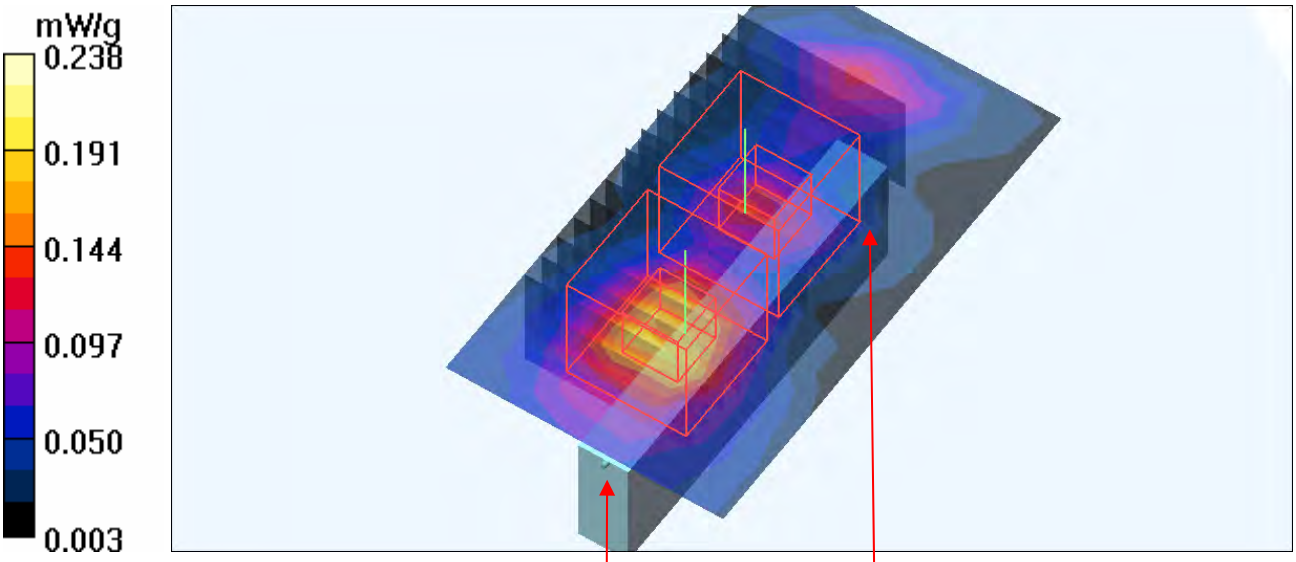

Head

Tail

Date/Time: 2009/4/24 10:43:40

Test Laboratory: Bureau Veritas ADT

M10-11a-Ch64

DUT: Wireless-N USB Network Adapter with Dual-Band ; Type: WUSB600N ver.2

Communication System: 802.11a ; Frequency: 5320 MHz ; Duty Cycle: 1:1 ; Modulation type: BPSK
Medium: MSL5800 Medium parameters used: f = 5320 MHz; σ = 5.38 mho/m; ε_r = 50.1; ρ = 1000 kg/m^3
Phantom section: Flat Section ; Separation distance : 5 mm (The edge side of the EUT to the Phantom)

DASY4 Configuration:
- Probe: EX3DV3 - SN3504 ; ConvF(4.06, 4.06, 4.06) ; Calibrated: 2009/1/21
- Sensor-Surface: 3mm (Mechanical Surface Detection)
- Electronics: DAE3 Sn510 ; Calibrated: 2009/1/21
- Phantom: SAM 12 ; Type: SAM V4.0 ; Serial: TP 1202
- Measurement SW: DASY4, V4.7 Build 80 ; Postprocessing SW: SEMCAD, V1.8 Build 186

High Channel 64/Area Scan (6x10x1): Measurement grid: dx=10mm, dy=10mm
Maximum value of SAR (measured) = 0.702 mW/g
High Channel 64/Zoom Scan (8x8x8)/Cube 0: Measurement grid: dx=4.3mm, dy=4.3mm, dz=3mm
Reference Value = 6.53 V/m
Peak SAR (extrapolated) = 1.64 W/kg
SAR(1 g) = 0.485 mW/g; SAR(10 g) = 0.175 mW/g
Maximum value of SAR (measured) = 0.684 mW/g
High Channel 64/Zoom Scan (8x8x8)/Cube 1: Measurement grid: dx=4.3mm, dy=4.3mm, dz=3mm
Reference Value = 6.53 V/m
Peak SAR (extrapolated) = 1.09 W/kg
SAR(1 g) = 0.318 mW/g; SAR(10 g) = 0.111 mW/g
Maximum value of SAR (measured) = 0.462 mW/g

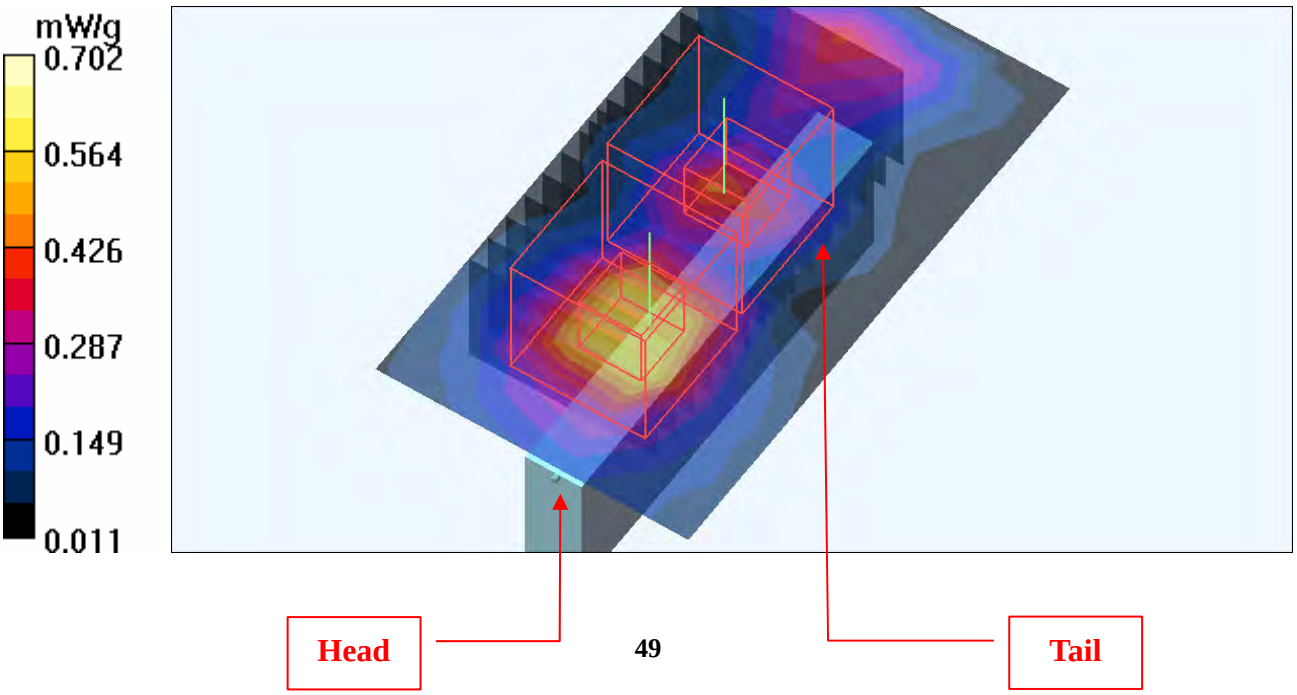

Date/Time: 2009/4/24 11:35:47

Test Laboratory: Bureau Veritas ADT

M10-11a-Ch140

DUT: Wireless-N USB Network Adapter with Dual-Band ; Type: WUSB600N ver.2

Communication System: 802.11a ; Frequency: 5700 MHz ; Duty Cycle: 1:1 ; Modulation type: BPSK
Medium: MSL5800 Medium parameters used: f = 5700 MHz; σ = 5.93 mho/m; ε_r = 49.3; ρ = 1000 kg/m^3
Phantom section: Flat Section ; Separation distance : 5 mm (The edge side of the EUT to the Phantom)

DASY4 Configuration:
- Probe: EX3DV3 - SN3504 ; ConvF(3.91, 3.91, 3.91) ; Calibrated: 2009/1/21
- Sensor-Surface: 3mm (Mechanical Surface Detection)
- Electronics: DAE3 Sn510 ; Calibrated: 2009/1/21
- Phantom: SAM 12 ; Type: SAM V4.0 ; Serial: TP 1202
- Measurement SW: DASY4, V4.7 Build 80 ; Postprocessing SW: SEMCAD, V1.8 Build 186

High Channel 140/Area Scan (6x10x1): Measurement grid: dx=10mm, dy=10mm
Maximum value of SAR (measured) = 0.189 mW/g
High Channel 140/Zoom Scan (8x8x8)/Cube 0: Measurement grid: dx=4.3mm, dy=4.3mm, dz=3mm
Reference Value = 3.74 V/m
Peak SAR (extrapolated) = 0.949 W/kg
SAR(1 g) = 0.148 mW/g; SAR(10 g) = 0.057 mW/g
Maximum value of SAR (measured) = 0.205 mW/g
High Channel 140/Zoom Scan (8x8x8)/Cube 1: Measurement grid: dx=4.3mm, dy=4.3mm, dz=3mm
Reference Value = 3.74 V/m
Peak SAR (extrapolated) = 0.248 W/kg
SAR(1 g) = 0.079 mW/g; SAR(10 g) = 0.030 mW/g
Maximum value of SAR (measured) = 0.127 mW/g

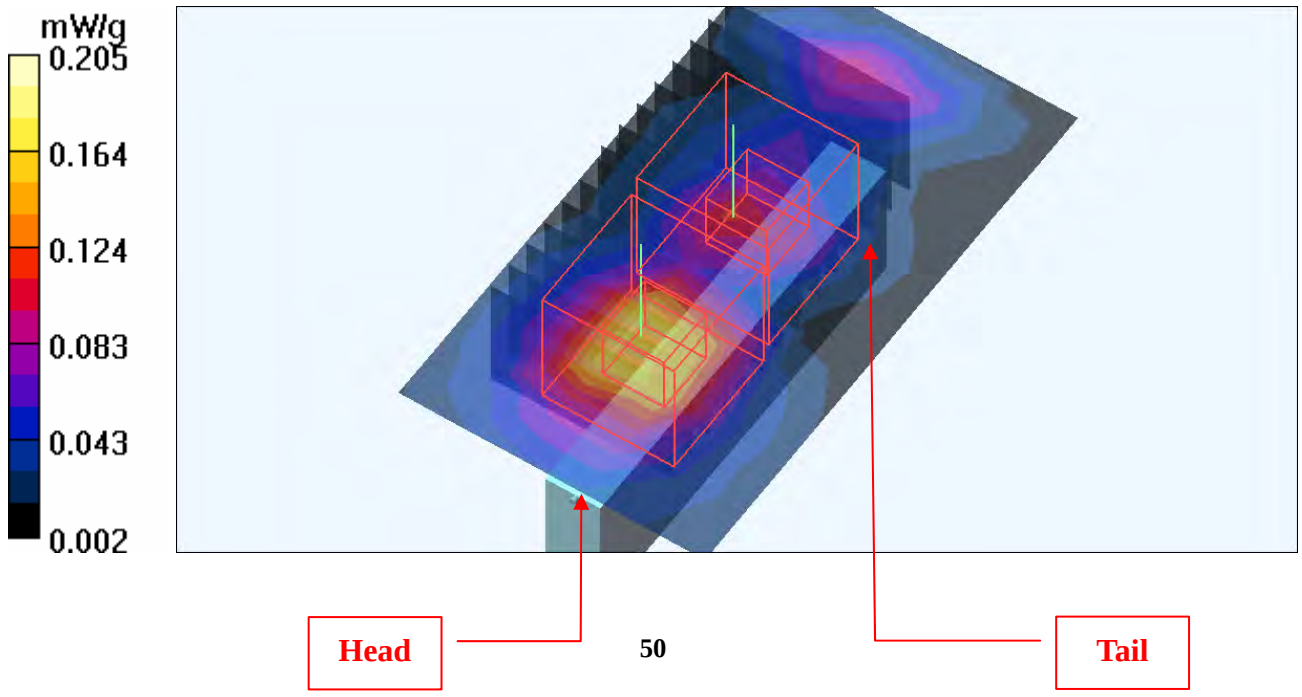

Date/Time: 2009/4/24 13:18:36

Test Laboratory: Bureau Veritas ADT

M11-11aN 20M-Ch40

DUT: Wireless-N USB Network Adapter with Dual-Band ; Type: WUSB600N ver.2

Communication System: 11n 5G span20 ; Frequency: 5200 MHz ; Duty Cycle: 1:1 ; Modulation type: BPSK

Medium: MSL5800 Medium parameters used: f = 5200 MHz; σ = 5.2 mho/m; ε_r = 50.3; ρ = 1000 kg/m^3

Phantom section: Flat Section ; Separation distance : 5 mm (The edge side of the EUT to the Phantom)

DASY4 Configuration:

- Probe: EX3DV3 - SN3504 ; ConvF(4.38, 4.38, 4.38) ; Calibrated: 2009/1/21
- Sensor-Surface: 3mm (Mechanical Surface Detection)
- Electronics: DAE3 Sn510 ; Calibrated: 2009/1/21
- Phantom: SAM 12 ; Type: SAM V4.0 ; Serial: TP 1202
- Measurement SW: DASY4, V4.7 Build 80 ; Postprocessing SW: SEMCAD, V1.8 Build 186

Mid Channel 40/Area Scan (6x10x1): Measurement grid: dx=10mm, dy=10mm

Maximum value of SAR (measured) = 0.433 mW/g

Mid Channel 40/Zoom Scan (8x8x8)/Cube 0: Measurement grid: dx=4.3mm, dy=4.3mm, dz=3mm

Reference Value = 5.54 V/m

Peak SAR (extrapolated) = 1.13 W/kg

SAR(1 g) = 0.341 mW/g; SAR(10 g) = 0.120 mW/g

Maximum value of SAR (measured) = 0.483 mW/g

Mid Channel 40/Zoom Scan (8x8x8)/Cube 1: Measurement grid: dx=4.3mm, dy=4.3mm, dz=3mm

Reference Value = 5.54 V/m

Peak SAR (extrapolated) = 0.907 W/kg

SAR(1 g) = 0.306 mW/g; SAR(10 g) = 0.099 mW/g

Maximum value of SAR (measured) = 0.453 mW/g

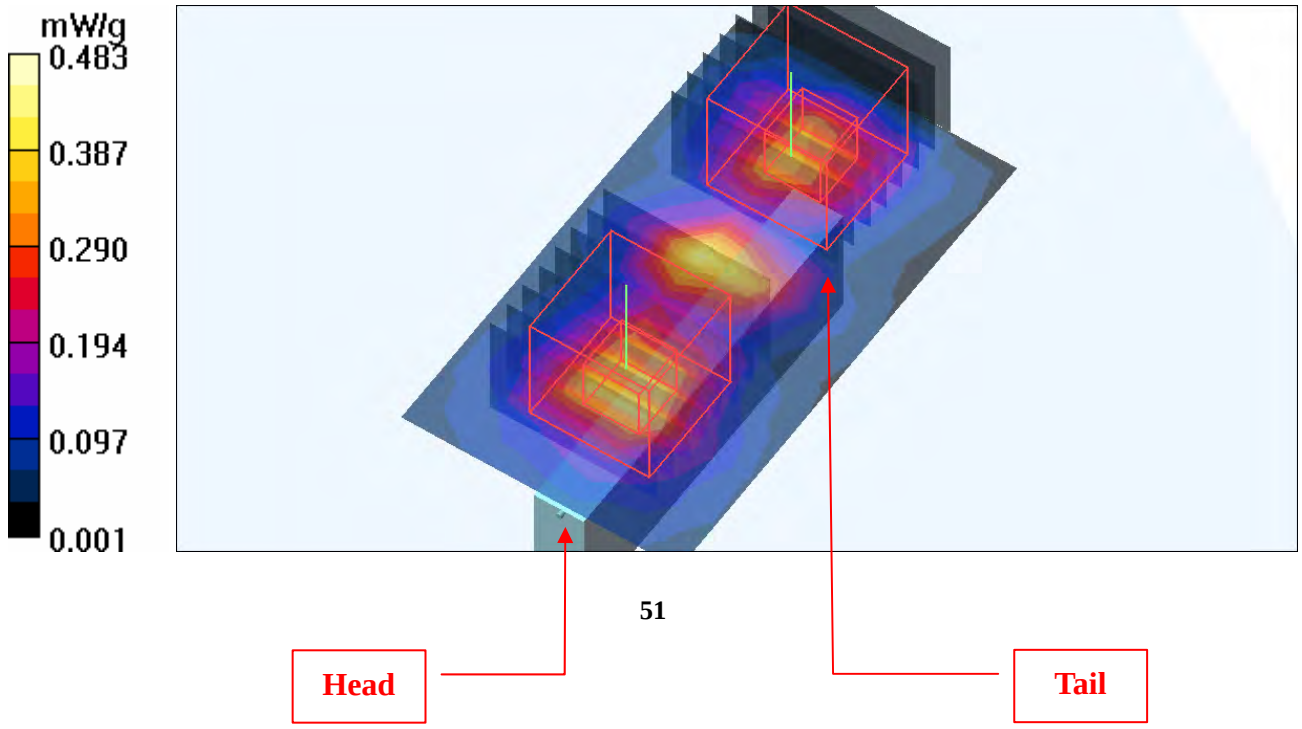

Date/Time: 2009/4/24 14:06:37

Test Laboratory: Bureau Veritas ADT

M11-11aN 20M-Ch52

DUT: Wireless-N USB Network Adapter with Dual-Band ; Type: WUSB600N ver.2

Communication System: 11n 5G span20 ; Frequency: 5260 MHz ; Duty Cycle: 1:1 ; Modulation type: BPSK

Medium: MSL5800 Medium parameters used: f = 5260 MHz; σ = 5.29 mho/m; ε_r = 50.2; ρ = 1000 kg/m^3

Phantom section: Flat Section ; Separation distance : 5 mm (The edge side of the EUT to the Phantom)

DASY4 Configuration:

- Probe: EX3DV3 - SN3504 ; ConvF(4.06, 4.06, 4.06) ; Calibrated: 2009/1/21
- Sensor-Surface: 3mm (Mechanical Surface Detection)
- Electronics: DAE3 Sn510 ; Calibrated: 2009/1/21
- Phantom: SAM 12 ; Type: SAM V4.0 ; Serial: TP 1202
- Measurement SW: DASY4, V4.7 Build 80 ; Postprocessing SW: SEMCAD, V1.8 Build 186

Low Channel 52/Area Scan (6x10x1): Measurement grid: dx=10mm, dy=10mm

Maximum value of SAR (measured) = 0.805 mW/g

Low Channel 52/Zoom Scan (8x8x8)/Cube 0: Measurement grid: dx=4.3mm, dy=4.3mm, dz=3mm

Reference Value = 10.2 V/m

Peak SAR (extrapolated) = 1.97 W/kg

SAR(1 g) = 0.630 mW/g; SAR(10 g) = 0.231 mW/g

Maximum value of SAR (measured) = 0.904 mW/g

Low Channel 52/Zoom Scan (8x8x8)/Cube 1: Measurement grid: dx=4.3mm, dy=4.3mm, dz=3mm

Reference Value = 10.2 V/m

Peak SAR (extrapolated) = 1.69 W/kg

SAR(1 g) = 0.524 mW/g; SAR(10 g) = 0.184 mW/g

Maximum value of SAR (measured) = 0.773 mW/g

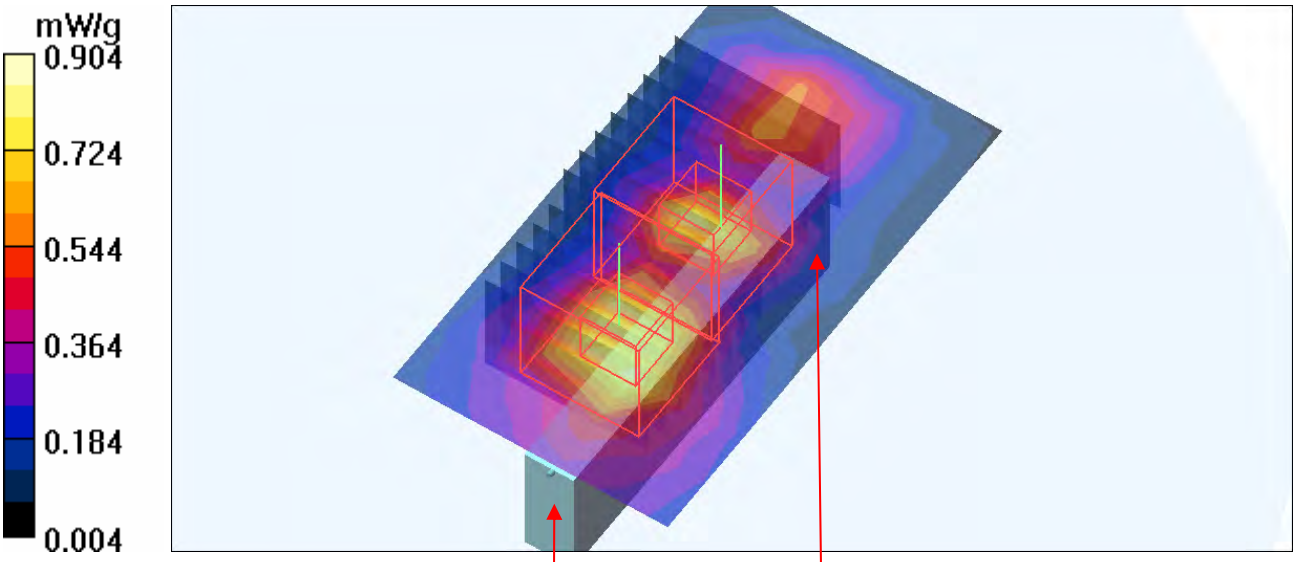

Head

Tail

Date/Time: 2009/4/24 14:58:43

Test Laboratory: Bureau Veritas ADT

M11-11aN 20M-Ch140

DUT: Wireless-N USB Network Adapter with Dual-Band ; Type: WUSB600N ver.2

Communication System: 11n 5G span20 ; Frequency: 5700 MHz ; Duty Cycle: 1:1 ; Modulation type: BPSK

Medium: MSL5800 Medium parameters used: f = 5700 MHz; σ = 5.93 mho/m; ε_r = 49.3; ρ = 1000 kg/m^3

Phantom section: Flat Section ; Separation distance : 5 mm (The edge side of the EUT to the Phantom)

DASY4 Configuration:

- Probe: EX3DV3 - SN3504 ; ConvF(3.91, 3.91, 3.91) ; Calibrated: 2009/1/21
- Sensor-Surface: 3mm (Mechanical Surface Detection)
- Electronics: DAE3 Sn510 ; Calibrated: 2009/1/21
- Phantom: SAM 12 ; Type: SAM V4.0 ; Serial: TP 1202
- Measurement SW: DASY4, V4.7 Build 80 ; Postprocessing SW: SEMCAD, V1.8 Build 186

High Channel 140/Area Scan (6x10x1): Measurement grid: dx=10mm, dy=10mm

Maximum value of SAR (measured) = 0.339 mW/g

High Channel 140/Zoom Scan (8x8x8)/Cube 0: Measurement grid: dx=4.3mm, dy=4.3mm, dz=3mm

Reference Value = 5.52 V/m

Peak SAR (extrapolated) = 1.12 W/kg

SAR(1 g) = 0.301 mW/g; SAR(10 g) = 0.110 mW/g

Maximum value of SAR (measured) = 0.415 mW/g

High Channel 140/Zoom Scan (8x8x8)/Cube 1: Measurement grid: dx=4.3mm, dy=4.3mm, dz=3mm

Reference Value = 5.52 V/m

Peak SAR (extrapolated) = 0.861 W/kg

SAR(1 g) = 0.221 mW/g; SAR(10 g) = 0.066 mW/g

Maximum value of SAR (measured) = 0.324 mW/g

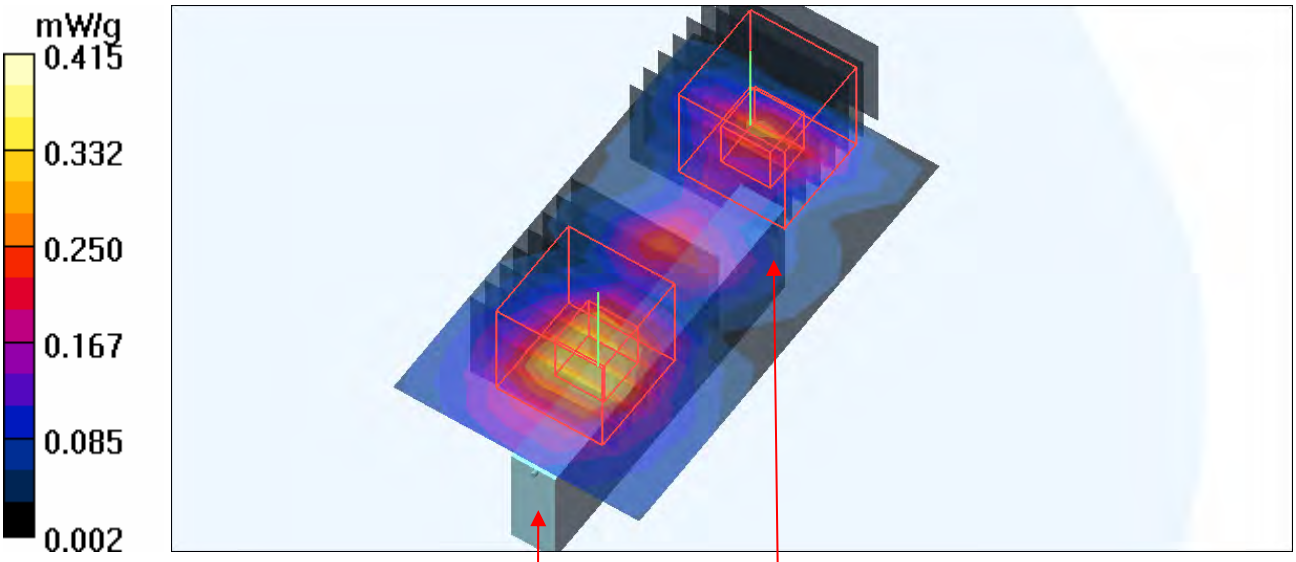

Head

Tail

Date/Time: 2009/4/24 16:57:33

Test Laboratory: Bureau Veritas ADT

M12-11aN 40M-Ch46

DUT: Wireless-N USB Network Adapter with Dual-Band ; Type: WUSB600N ver.2

Communication System: 11n 5G span40 ; Frequency: 5230 MHz ; Duty Cycle: 1:1 ; Modulation type: BPSK

Medium: MSL5800 Medium parameters used: f = 5230 MHz; σ = 5.25 mho/m; ε_r = 50.2; ρ = 1000 kg/m^3

Phantom section: Flat Section ; Separation distance : 5 mm (The edge side of the EUT to the Phantom)

DASY4 Configuration:

- Probe: EX3DV3 - SN3504 ; ConvF(4.38, 4.38, 4.38) ; Calibrated: 2009/1/21
- Sensor-Surface: 3mm (Mechanical Surface Detection)
- Electronics: DAE3 Sn510 ; Calibrated: 2009/1/21
- Phantom: SAM 12 ; Type: SAM V4.0 ; Serial: TP 1202
- Measurement SW: DASY4, V4.7 Build 80 ; Postprocessing SW: SEMCAD, V1.8 Build 186

High Channel 46/Area Scan (6x10x1): Measurement grid: dx=10mm, dy=10mm

Maximum value of SAR (measured) = 0.171 mW/g

High Channel 46/Zoom Scan (8x8x8)/Cube 0: Measurement grid: dx=4.3mm, dy=4.3mm, dz=3mm

Reference Value = 3.73 V/m

Peak SAR (extrapolated) = 0.805 W/kg

SAR(1 g) = 0.134 mW/g; SAR(10 g) = 0.048 mW/g

Maximum value of SAR (measured) = 0.190 mW/g

High Channel 46/Zoom Scan (8x8x8)/Cube 1: Measurement grid: dx=4.3mm, dy=4.3mm, dz=3mm

Reference Value = 3.73 V/m

Peak SAR (extrapolated) = 0.353 W/kg

SAR(1 g) = 0.117 mW/g; SAR(10 g) = 0.038 mW/g

Maximum value of SAR (measured) = 0.182 mW/g

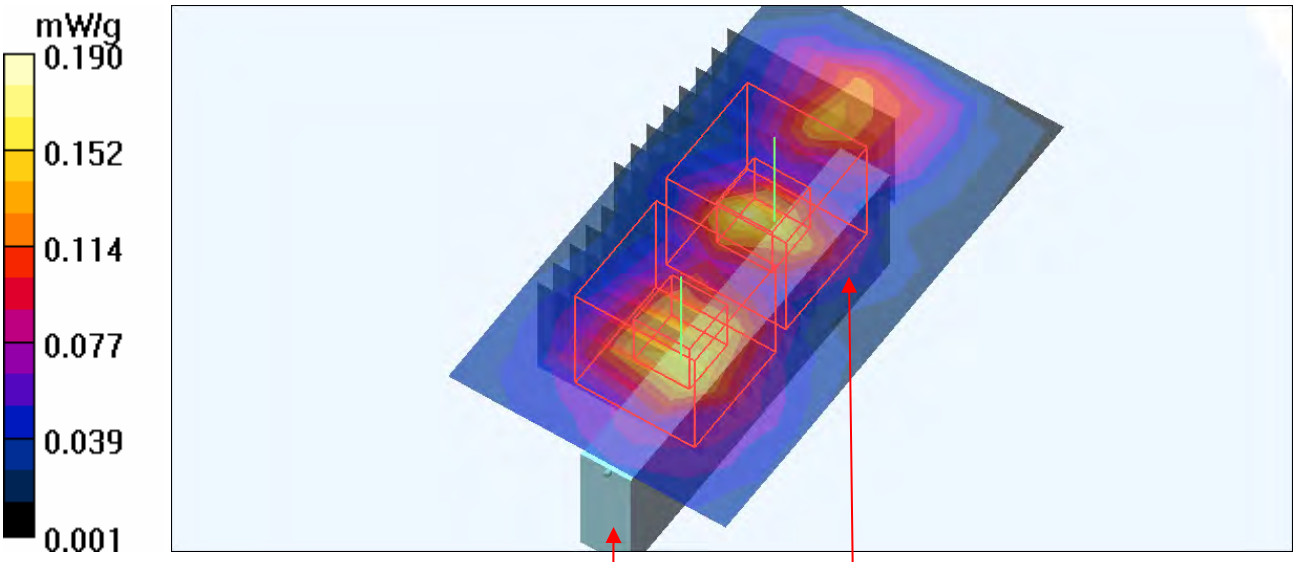

Head

Tail

Date/Time: 2009/4/24 17:36:28

Test Laboratory: Bureau Veritas ADT

M12-11aN 40M-Ch54

DUT: Wireless-N USB Network Adapter with Dual-Band ; Type: WUSB600N ver.2

Communication System: 11n 5G span40 ; Frequency: 5270 MHz ; Duty Cycle: 1:1 ; Modulation type: BPSK

Medium: MSL5800 Medium parameters used: f = 5270 MHz; σ = 5.31 mho/m; ε_r = 50.2; ρ = 1000 kg/m^3

Phantom section: Flat Section ; Separation distance : 5 mm (The edge side of the EUT to the Phantom)

DASY4 Configuration:

- Probe: EX3DV3 - SN3504 ; ConvF(4.06, 4.06, 4.06) ; Calibrated: 2009/1/21
- Sensor-Surface: 3mm (Mechanical Surface Detection)
- Electronics: DAE3 Sn510 ; Calibrated: 2009/1/21
- Phantom: SAM 12 ; Type: SAM V4.0 ; Serial: TP 1202
- Measurement SW: DASY4, V4.7 Build 80 ; Postprocessing SW: SEMCAD, V1.8 Build 186

Low Channel 54/Area Scan (6x10x1): Measurement grid: dx=10mm, dy=10mm

Maximum value of SAR (measured) = 0.164 mW/g

Low Channel 54/Zoom Scan (8x8x8)/Cube 0: Measurement grid: dx=4.3mm, dy=4.3mm, dz=3mm

Reference Value = 4.01 V/m

Peak SAR (extrapolated) = 0.445 W/kg

SAR(1 g) = 0.144 mW/g; SAR(10 g) = 0.053 mW/g

Maximum value of SAR (measured) = 0.209 mW/g

Low Channel 54/Zoom Scan (8x8x8)/Cube 1: Measurement grid: dx=4.3mm, dy=4.3mm, dz=3mm

Reference Value = 4.01 V/m

Peak SAR (extrapolated) = 0.322 W/kg

SAR(1 g) = 0.106 mW/g; SAR(10 g) = 0.035 mW/g

Maximum value of SAR (measured) = 0.161 mW/g

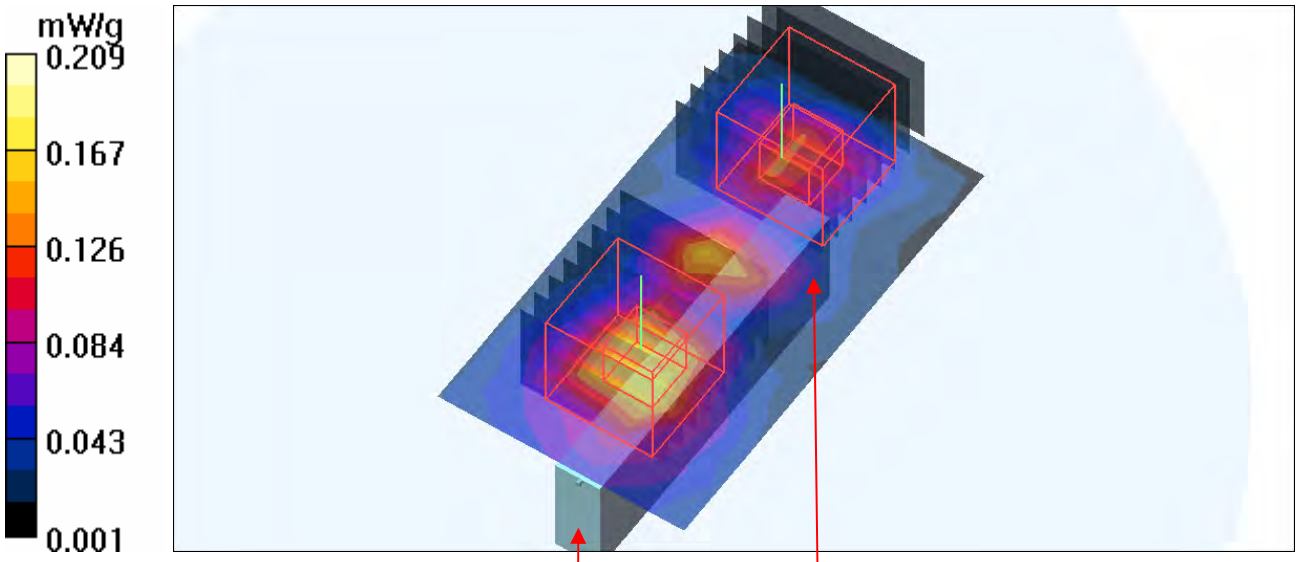

Head

Tail

Date/Time: 2009/4/24 18:15:41

Test Laboratory: Bureau Veritas ADT

M12-11aN 40M-Ch134

DUT: Wireless-N USB Network Adapter with Dual-Band ; Type: WUSB600N ver.2

Communication System: 11n 5G span40 ; Frequency: 5670 MHz ; Duty Cycle: 1:1 ; Modulation type: BPSK

Medium: MSL5800 Medium parameters used: f = 5670 MHz; σ = 5.89 mho/m; ε_r = 49.4; ρ = 1000 kg/m^3

Phantom section: Flat Section ; Separation distance : 5 mm (The edge side of the EUT to the Phantom)

DASY4 Configuration:

- Probe: EX3DV3 - SN3504 ; ConvF(3.91, 3.91, 3.91) ; Calibrated: 2009/1/21
- Sensor-Surface: 3mm (Mechanical Surface Detection)
- Electronics: DAE3 Sn510 ; Calibrated: 2009/1/21
- Phantom: SAM 12 ; Type: SAM V4.0 ; Serial: TP 1202
- Measurement SW: DASY4, V4.7 Build 80 ; Postprocessing SW: SEMCAD, V1.8 Build 186

High Channel 134/Area Scan (6x10x1): Measurement grid: dx=10mm, dy=10mm

Maximum value of SAR (measured) = 0.155 mW/g

High Channel 134/Zoom Scan (8x8x8)/Cube 0: Measurement grid: dx=4.3mm, dy=4.3mm, dz=3mm

Reference Value = 4.17 V/m

Peak SAR (extrapolated) = 0.443 W/kg

SAR(1 g) = 0.133 mW/g; SAR(10 g) = 0.051 mW/g

Maximum value of SAR (measured) = 0.196 mW/g

High Channel 134/Zoom Scan (8x8x8)/Cube 1: Measurement grid: dx=4.3mm, dy=4.3mm, dz=3mm

Reference Value = 4.17 V/m

Peak SAR (extrapolated) = 0.291 W/kg

SAR(1 g) = 0.092 mW/g; SAR(10 g) = 0.027 mW/g

Maximum value of SAR (measured) = 0.141 mW/g

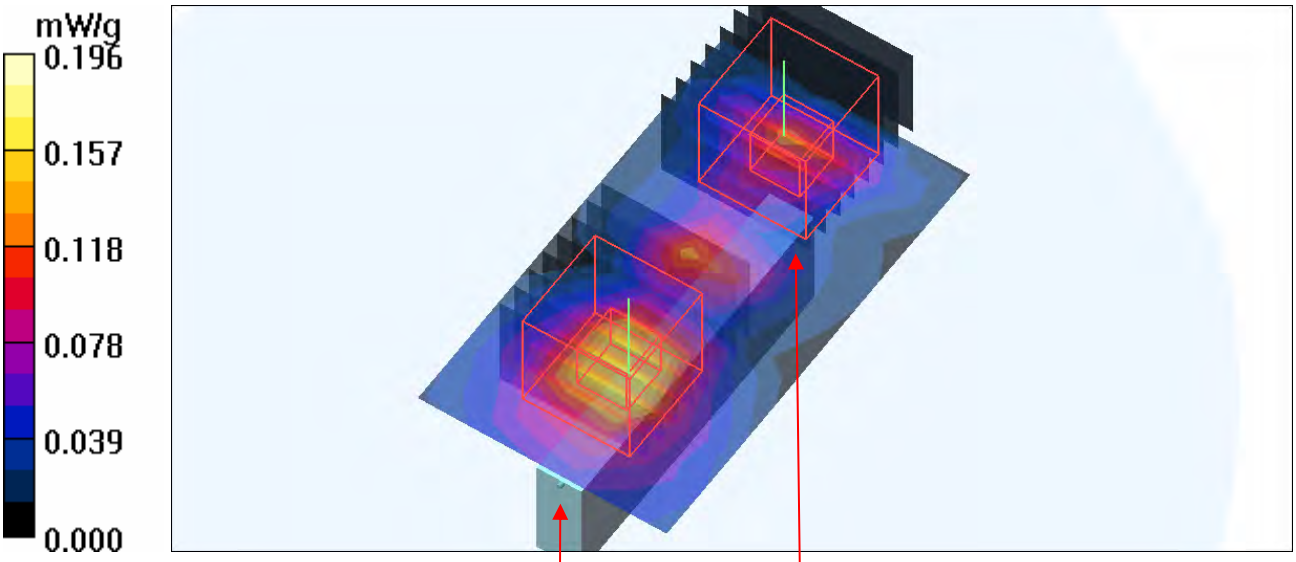

Head

Tail

Date/Time: 2009/4/24 20:39:51

Test Laboratory: Bureau Veritas ADT

11aN 20M-Ch60 Step Size Set Minimum

DUT: Wireless-N USB Network Adapter with Dual-Band ; Type: WUSB600N ver.2

Communication System: 11n 5G span20 ; Frequency: 5300 MHz ; Duty Cycle: 1:1 ; Modulation type: BPSK
Medium: MSL5800 Medium parameters used: f = 5300 MHz; σ = 5.35 mho/m; ε_r = 50.1; ρ = 1000 kg/m^3
Phantom section: Flat Section ; Separation distance : 5 mm (The bottom side of the EUT to the Phantom)

DASY4 Configuration:
- Probe: EX3DV3 - SN3504 ; ConvF(4.06, 4.06, 4.06) ; Calibrated: 2009/1/21
- Sensor-Surface: 2mm (Mechanical Surface Detection)
- Electronics: DAE3 Sn510 ; Calibrated: 2009/1/21
- Phantom: SAM 12 ; Type: SAM V4.0 ; Serial: TP 1202
- Measurement SW: DASY4, V4.7 Build 80 ; Postprocessing SW: SEMCAD, V1.8 Build 186

Mid Channel 60/Area Scan (6x10x1): Measurement grid: dx=10mm, dy=10mm
Maximum value of SAR (measured) = 1.52 mW/g

Mid Channel 60/Zoom Scan (15x15x11)/Cube 0: Measurement grid: dx=2.15mm, dy=2.15mm, dz=2mm
Reference Value = 14.2 V/m
Peak SAR (extrapolated) = 5.53 W/kg
SAR(1 g) = 1.11 mW/g; SAR(10 g) = 0.376 mW/g
Maximum value of SAR (measured) = 2.22 mW/g

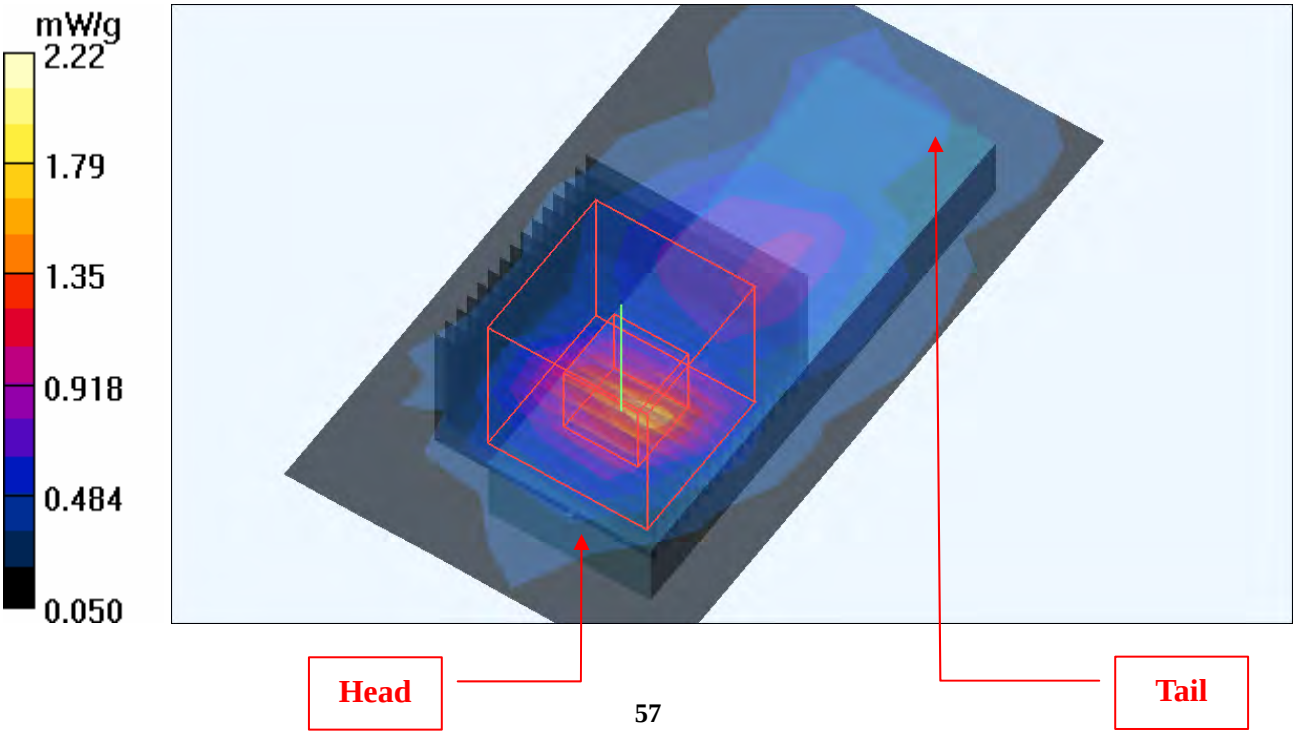

Date/Time: 2009/4/23 12:56:14

Test Laboratory: Bureau Veritas ADT

System Validation Check-MSL 5GHz

DUT: Dipole 5 GHz ; Type: D5GHzV2 ; Serial: 1019 ; Test Frequency: 5200 MHz

Communication System: CW ; Frequency: 5200 MHz; Duty Cycle: 1:1; Modulation type: CW
Medium: MSL5800;Medium parameters used: f = 5200 MHz; σ = 5.16 mho/m; ε_r = 50.9; ρ = 1000 kg/m^3 ; Liquid level : 153 mm
Phantom section: Flat Section ; Separation distance : 10 mm (The feetpoint of the dipole to the Phantom)Air temp. : 22.8 degrees ; Liquid temp. : 21.7 degrees

DASY4 Configuration:
- Probe: EX3DV3 - SN3504 ; ConvF(4.38, 4.38, 4.38) ; Calibrated: 2009/1/21
- Sensor-Surface: 3mm (Mechanical Surface Detection)
- Electronics: DAE3 Sn510; Calibrated: 2009/1/21
- Phantom: SAM 12; Type: SAM V4.0; Serial: TP 1202
- Measurement SW: DASY4, V4.7 Build 80; Postprocessing SW: SEMCAD, V1.8 Build 186

f=5200, d=10mm, Pin=100mW/Area Scan (6x6x1): Measurement grid: dx=10mm, dy=10mm
Maximum value of SAR (measured) = 7.59 mW/g

f=5200, d=10mm, Pin=100mW/Zoom Scan (8x8x8)/Cube 0: Measurement grid: dx=4.3mm, dy=4.3mm, dz=3mm
Reference Value = 50.3 V/m; Power Drift = -0.027 dB
Peak SAR (extrapolated) = 27.5 W/kg
SAR(1 g) = 7.79 mW/g; SAR(10 g) = 2.19 mW/g
Maximum value of SAR (measured) = 11.4 mW/g

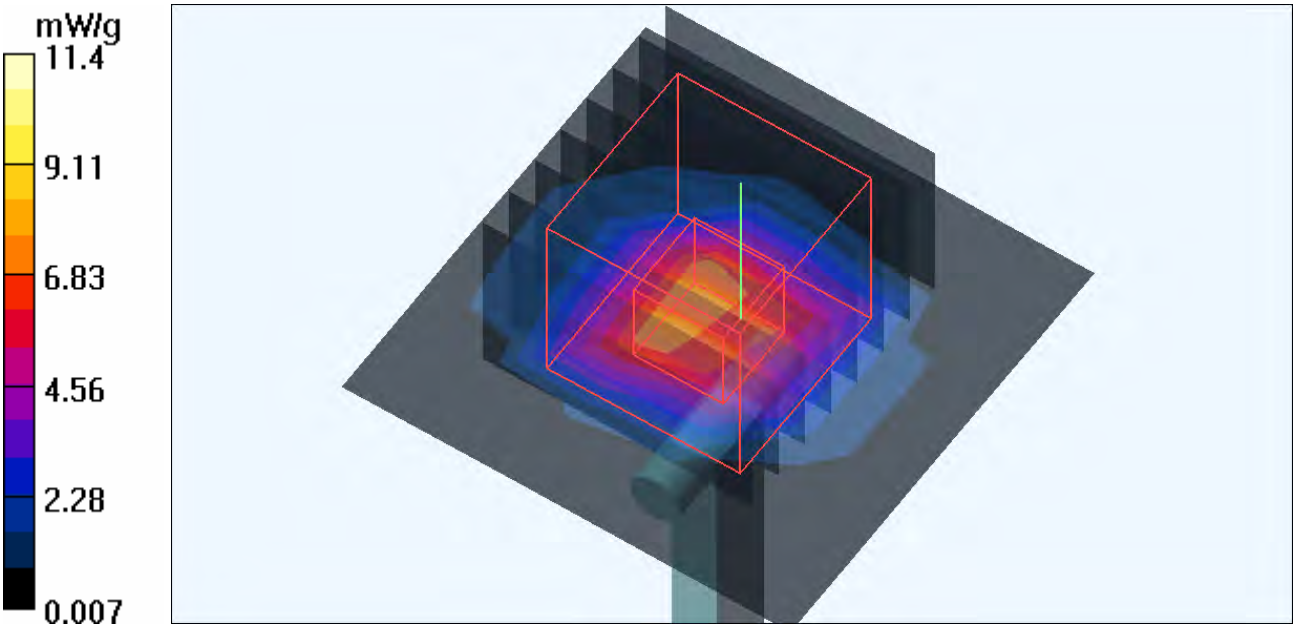

Date/Time: 2009/4/23 01:19:36

Test Laboratory: Bureau Veritas ADT

System Validation Check-MSL 5GHz

DUT: Dipole 5 GHz ; Type: D5GHzV2 ; Serial: 1019 ; Test Frequency: 5500 MHz

Communication System: CW ; Frequency: 5500 MHz; Duty Cycle: 1:1; Modulation type: CW
Medium: MSL5800;Medium parameters used: f = 5500 MHz; σ = 5.6 mho/m; ε_r = 50.3; ρ = 1000 kg/m^3 ;
Liquid level : 153 mm
Phantom section: Flat Section ; Separation distance : 10 mm (The feetpoint of the dipole to the Phantom)Air temp. : 22.8 degrees ; Liquid temp. : 21.7 degrees

DASY4 Configuration:
- Probe: EX3DV3 - SN3504 ; ConvF(3.98, 3.98, 3.98) ; Calibrated: 2009/1/21
- Sensor-Surface: 3mm (Mechanical Surface Detection)
- Electronics: DAE3 Sn510; Calibrated: 2009/1/21
- Phantom: SAM 12; Type: SAM V4.0; Serial: TP 1202
- Measurement SW: DASY4, V4.7 Build 80; Postprocessing SW: SEMCAD, V1.8 Build 186

f=5500, d=10mm, Pin=100mW/Area Scan (7x7x1): Measurement grid: dx=10mm, dy=10mm
Maximum value of SAR (measured) = 12.3 mW/g

f=5500, d=10mm, Pin=100mW/Zoom Scan (8x8x8)/Cube 0: Measurement grid: dx=4.3mm, dy=4.3mm, dz=3mm
Reference Value = 49.2 V/m; Power Drift = -0.044 dB
Peak SAR (extrapolated) = 31.2 W/kg
SAR(1 g) = 8.02 mW/g; SAR(10 g) = 2.25 mW/g
Maximum value of SAR (measured) = 12.1 mW/g

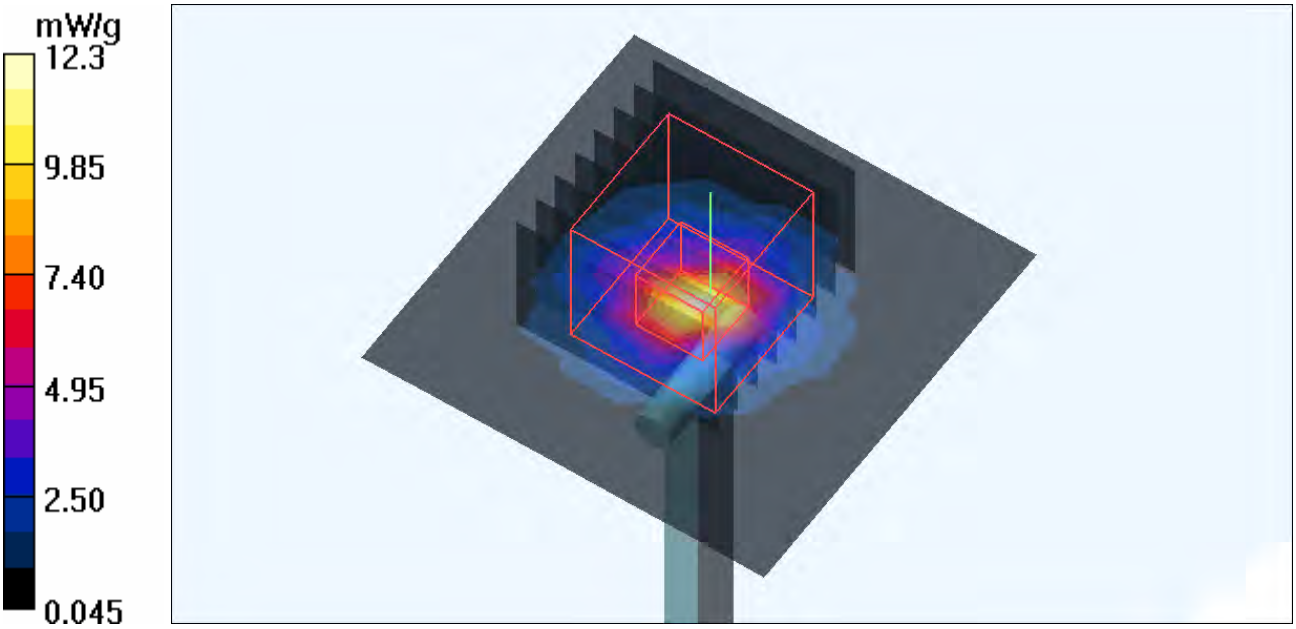

Date/Time: 2009/4/24 01:05:27

Test Laboratory: Bureau Veritas ADT

System Validation Check-MSL 5GHz

DUT: Dipole 5 GHz ; Type: D5GHzV2 ; Serial: 1019 ; Test Frequency: 5200 MHz

Communication System: CW ; Frequency: 5200 MHz; Duty Cycle: 1:1; Modulation type: CW
Medium: MSL5800;Medium parameters used: f = 5200 MHz; σ = 5.2 mho/m; ε_r = 50.3; ρ = 1000 kg/m^3 ;
Liquid level : 150 mm
Phantom section: Flat Section ; Separation distance : 10 mm (The feetpoint of the dipole to the Phantom)Air temp. : 22.4 degrees ; Liquid temp. : 21.5 degrees

DASY4 Configuration:
- Probe: EX3DV3 - SN3504 ; ConvF(4.38, 4.38, 4.38) ; Calibrated: 2009/1/21
- Sensor-Surface: 3mm (Mechanical Surface Detection)
- Electronics: DAE3 Sn510; Calibrated: 2009/1/21
- Phantom: SAM 12; Type: SAM V4.0; Serial: TP 1202
- Measurement SW: DASY4, V4.7 Build 80; Postprocessing SW: SEMCAD, V1.8 Build 186

f=5200, d=10mm, Pin=100mW/Area Scan (6x6x1): Measurement grid: dx=10mm, dy=10mm
Maximum value of SAR (measured) = 7.56 mW/g

f=5200, d=10mm, Pin=100mW/Zoom Scan (8x8x8)/Cube 0: Measurement grid: dx=4.3mm, dy=4.3mm, dz=3mm
Reference Value = 50.4 V/m; Power Drift = -0.081 dB
Peak SAR (extrapolated) = 29.4 W/kg
SAR(1 g) = 7.95 mW/g; SAR(10 g) = 2.22 mW/g
Maximum value of SAR (measured) = 11.6 mW/g

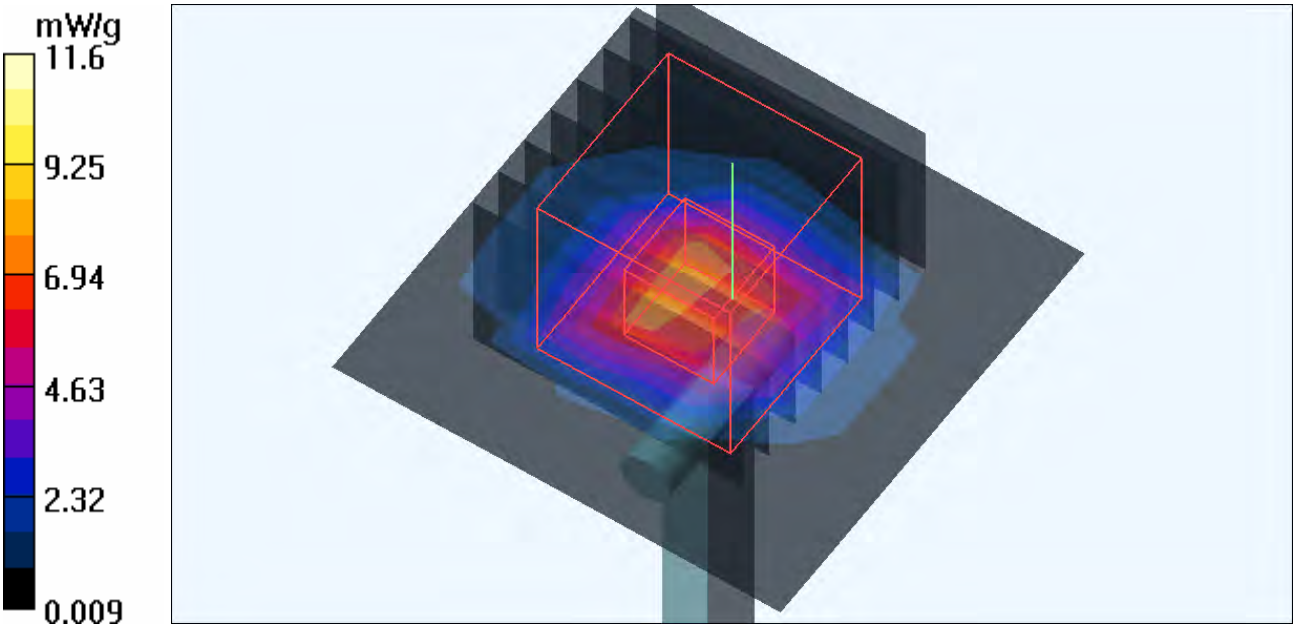

Date/Time: 2009/4/24 01:29:40

Test Laboratory: Bureau Veritas ADT

System Validation Check-MSL 5GHz

DUT: Dipole 5 GHz ; Type: D5GHzV2 ; Serial: 1019 ; Test Frequency: 5500 MHz

Communication System: CW ; Frequency: 5500 MHz; Duty Cycle: 1:1; Modulation type: CW
Medium: MSL5800;Medium parameters used: f = 5500 MHz; σ = 5.64 mho/m; ε_r = 49.7; ρ = 1000 kg/m^3 ; Liquid level : 150 mm
Phantom section: Flat Section ; Separation distance : 10 mm (The feetpoint of the dipole to the Phantom)Air temp. : 22.4 degrees ; Liquid temp. : 21.5 degrees

DASY4 Configuration:
- Probe: EX3DV3 - SN3504 ; ConvF(3.98, 3.98, 3.98) ; Calibrated: 2009/1/21
- Sensor-Surface: 3mm (Mechanical Surface Detection)
- Electronics: DAE3 Sn510; Calibrated: 2009/1/21
- Phantom: SAM 12; Type: SAM V4.0; Serial: TP 1202
- Measurement SW: DASY4, V4.7 Build 80; Postprocessing SW: SEMCAD, V1.8 Build 186

f=5500, d=10mm, Pin=100mW/Area Scan (7x7x1): Measurement grid: dx=10mm, dy=10mm
Maximum value of SAR (measured) = 12.5 mW/g
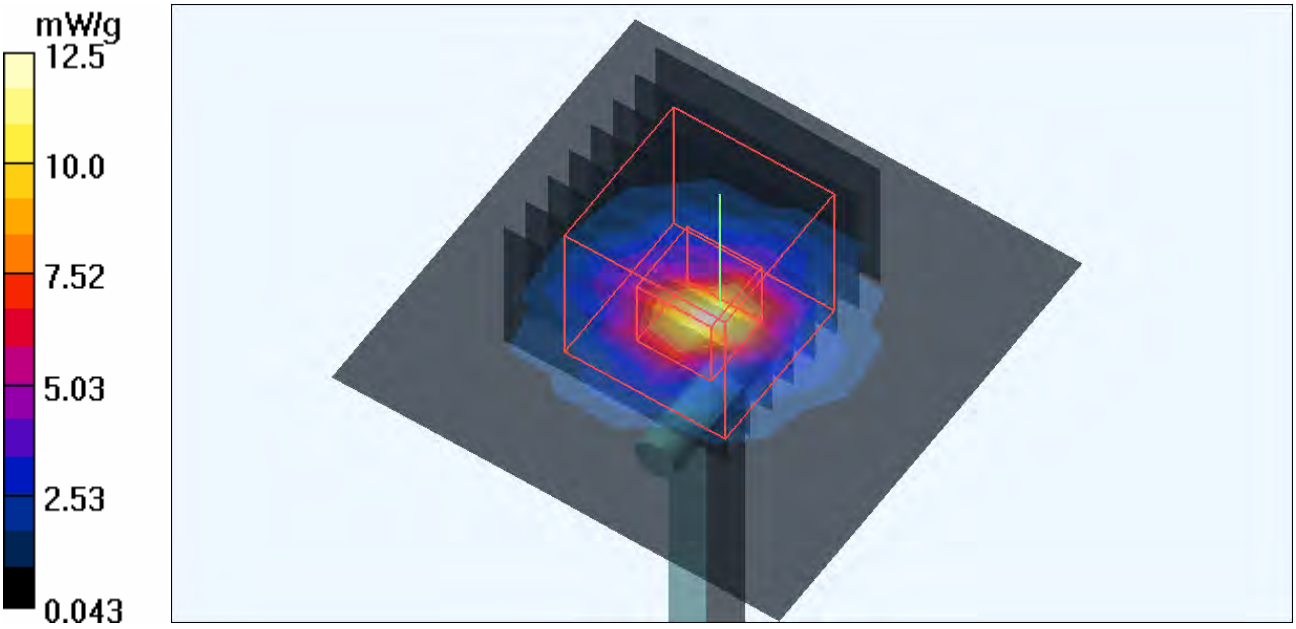
f=5500, d=10mm, Pin=100mW/Zoom Scan (8x8x8)/Cube 0: Measurement grid: dx=4.3mm, dy=4.3mm, dz=3mm
Reference Value = 48.7 V/m; Power Drift = -0.029 dB
Peak SAR (extrapolated) = 32.4 W/kg
SAR(1 g) = 8.04 mW/g; SAR(10 g) = 2.24 mW/g
Maximum value of SAR (measured) = 12.1 mW/g