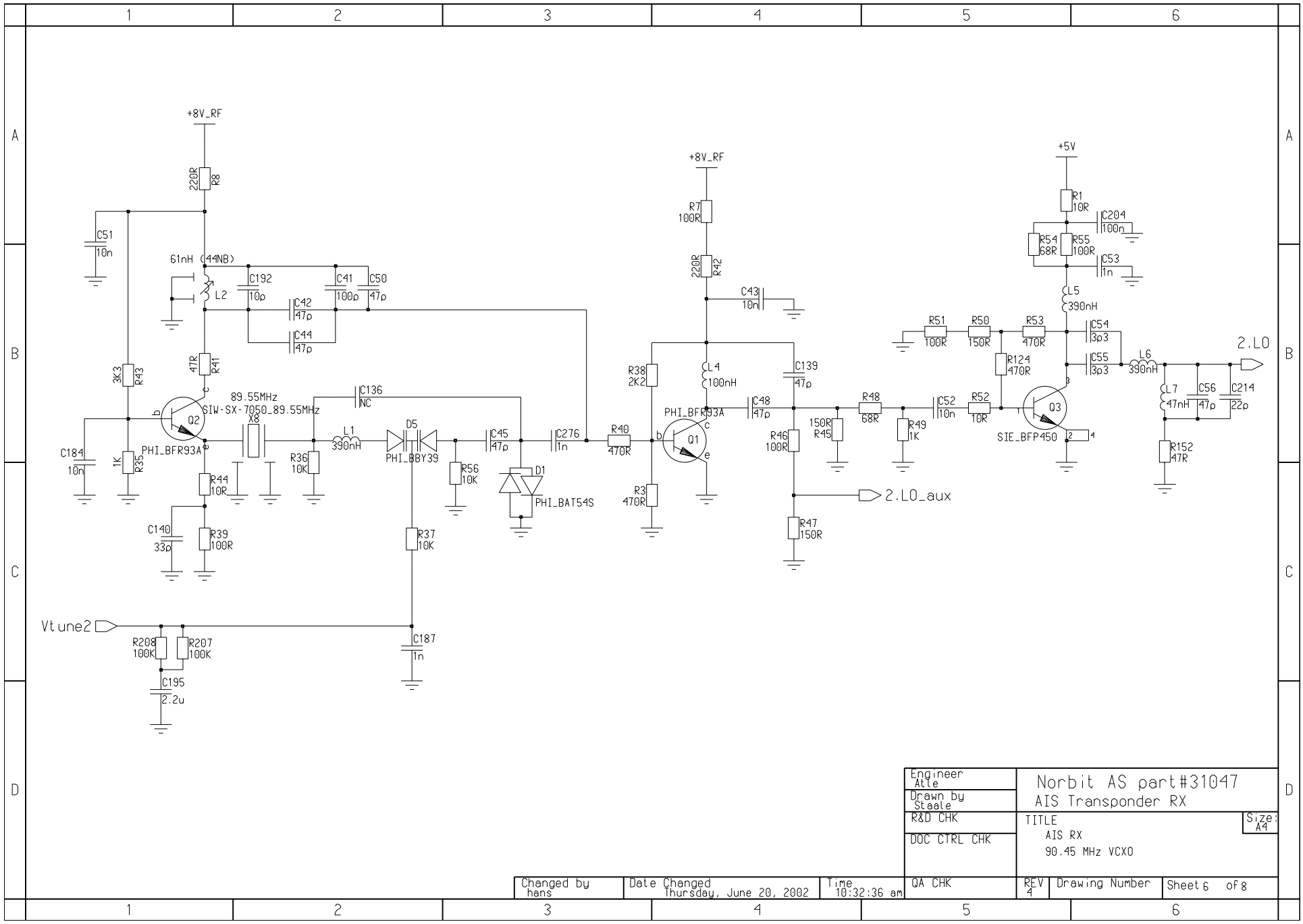

Engineer Atle	Norbit AS part#31047 AIS Transponder RX		
Drawn by Staale			
R&D CHK	TITLE AIS RX 90.45 MHz VCXO		Size: A4
DOC CTRL CHK			
QA CHK	REV 4	Drawing Number	Sheet 6 of 8

Changed by	Date Changed	Time
hans	Thursday, June 20, 2002	10:32:36 am